VTRC
Virginia Transportation Research Council

*We bring innovation to transportation.*

# Concrete Research Program at VTRC

## Virginia Concrete Conference
## March 3, 2016


Michael Sprinkel, P.E.

Associate Director, Materials

Michael Brown, Ph.D. P.E.

Associate Director, Structures, Pavements and Geotechnical

# Materials Salaried Staff

**Quintin D. Elliott**
Chief Deputy Commissioner
21463

**Jose P. Gomez**
General Admin Manager III
22023

**Michael M. Sprinkel**
Scientist Manager II
00565

**H. Celik Ozyildirim**
Scientist III
07851

**Michael W. Burton**
Engineering Tech III
14030

**Donald W. Dodds**
Engineering Tech III
00648

**Troy H. Deeds**
Engineering Tech III
07211

**Hari Krishnankuttynair**
Scientist II
00314

**Stacey D. Diefenderfer**
Scientist III
21522

**Kevin K. McGhee**
Scientist III
12540

**Daniel S. Lane**
Scientist III
08535

**Stephen R. Sharp**
Scientist III
12747

**Arthur W. Ordel**
Engineering Tech III
00816

# Materials Hourly Staff

**Michael M. Sprinkel**
Scientist Manager II
00565

**James W. Copeland**
Engineering Tech II
H0122

**John W. Burch**
Engineering Tech II
H0746

**Kenneth W. Herrick**
Engineering Tech II
H0755

**Benjamin G. Earl**
Engineering Tech II
H074

**Keith Peres**
Engineering Tech II
H0705

**Andrew J. Mills**
Engineering Tech III
H0668

**Jennifer S. Samuels**
Engineering Tech II
H0677

**Mark G. Potter**
Engineering Tech II
H0706

**Xuemeng Xia**
Engineering Tech II
H0780

**Thomas R. Williams**
Engineering Tech II
H0750

**Guida V. Zaga**
Engineering Tech II
H0672

# Structures, Pavements and Geotechnical Staff

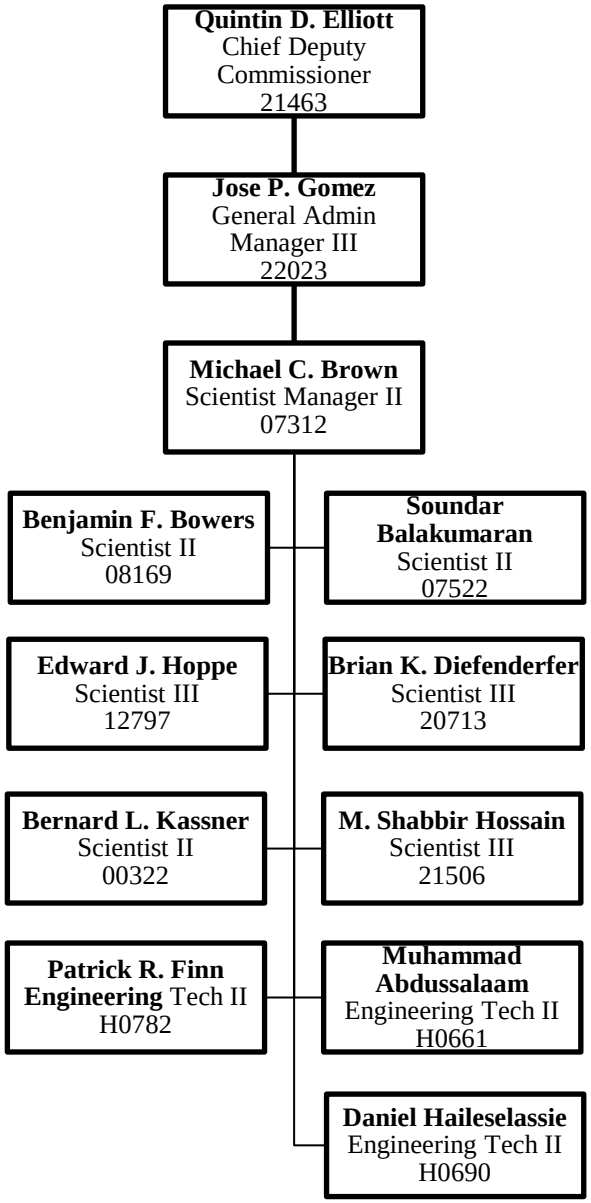

# Pavement Projects

- Pavement Repair Mixtures
- Roller Compacted Concrete
- Pervious Concrete Parking Areas
- Composite Pavement (SHRP2)

# Pavement Repair Mixtures

| Components [lb/yd$^3$] | Current 8-hour mix | Current 5-hour mix | Improved 6.5 hour mix |
|---|---|---|---|
| Cement Type I/II | 752 | 800 | 750 |
| Fly ash | 0 | 0 | 132 |
| Water | 279 | 275 | 265 |
| Fine Aggregate | 1156 | 1129 | 1061 |
| Coarse Aggregate | 1711 | 1711 | 1676 |
| *w/cm* | *0.37* | *0.34* | *0.30* |
| **Admix. [oz/cwt]** | | | |
| Hardening Acc. | - | 48 | 20 |
| Set Accelerating | 36 | - | 24 |

Presentation by Evelina Khakimova at 10:30 am Friday in Bridge Session

# Current Pavement Repair Mixtures Compressive Strengths

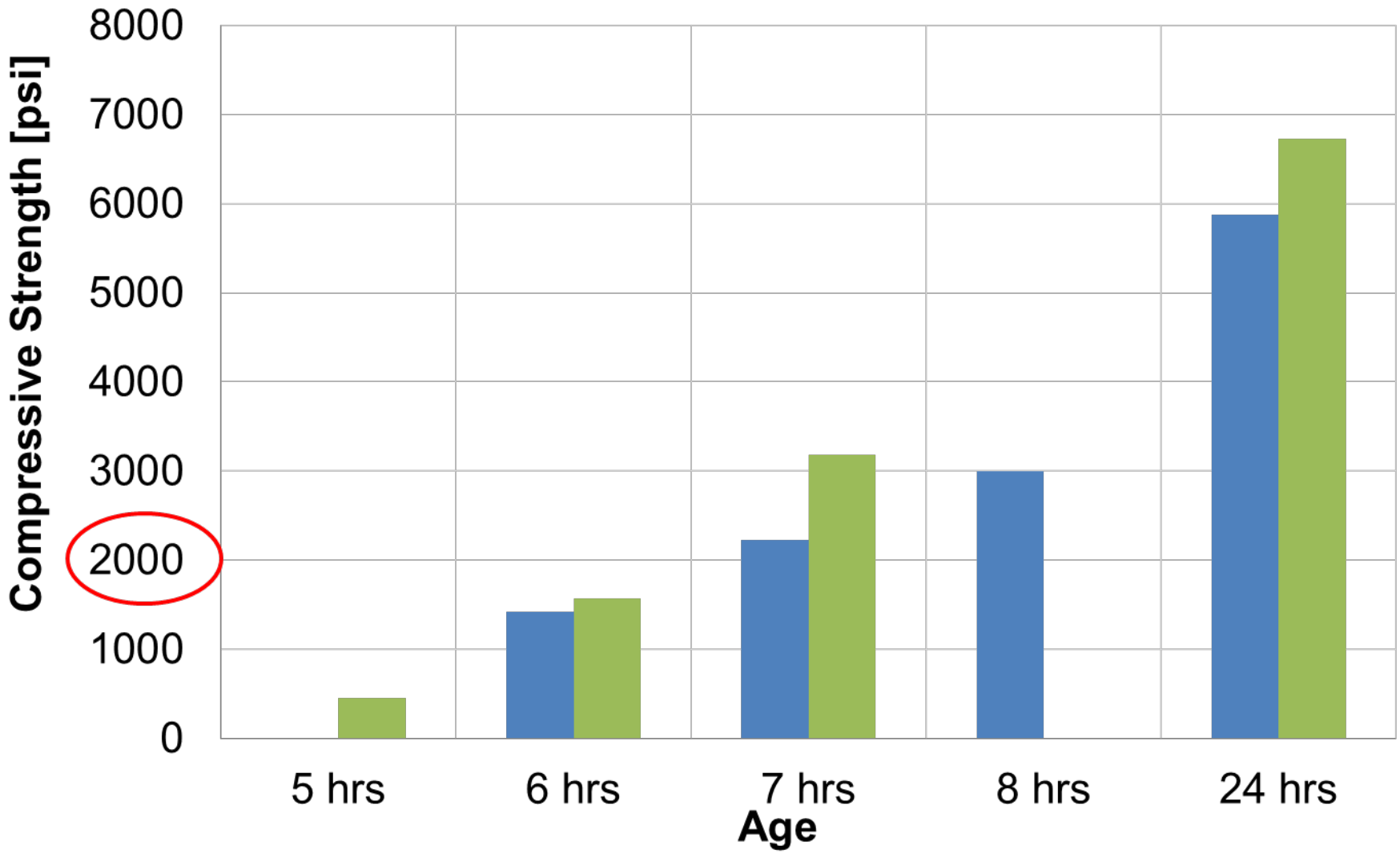


Insulated Curing

# Improved Pavement Repair Mixtures Compressive Strengths

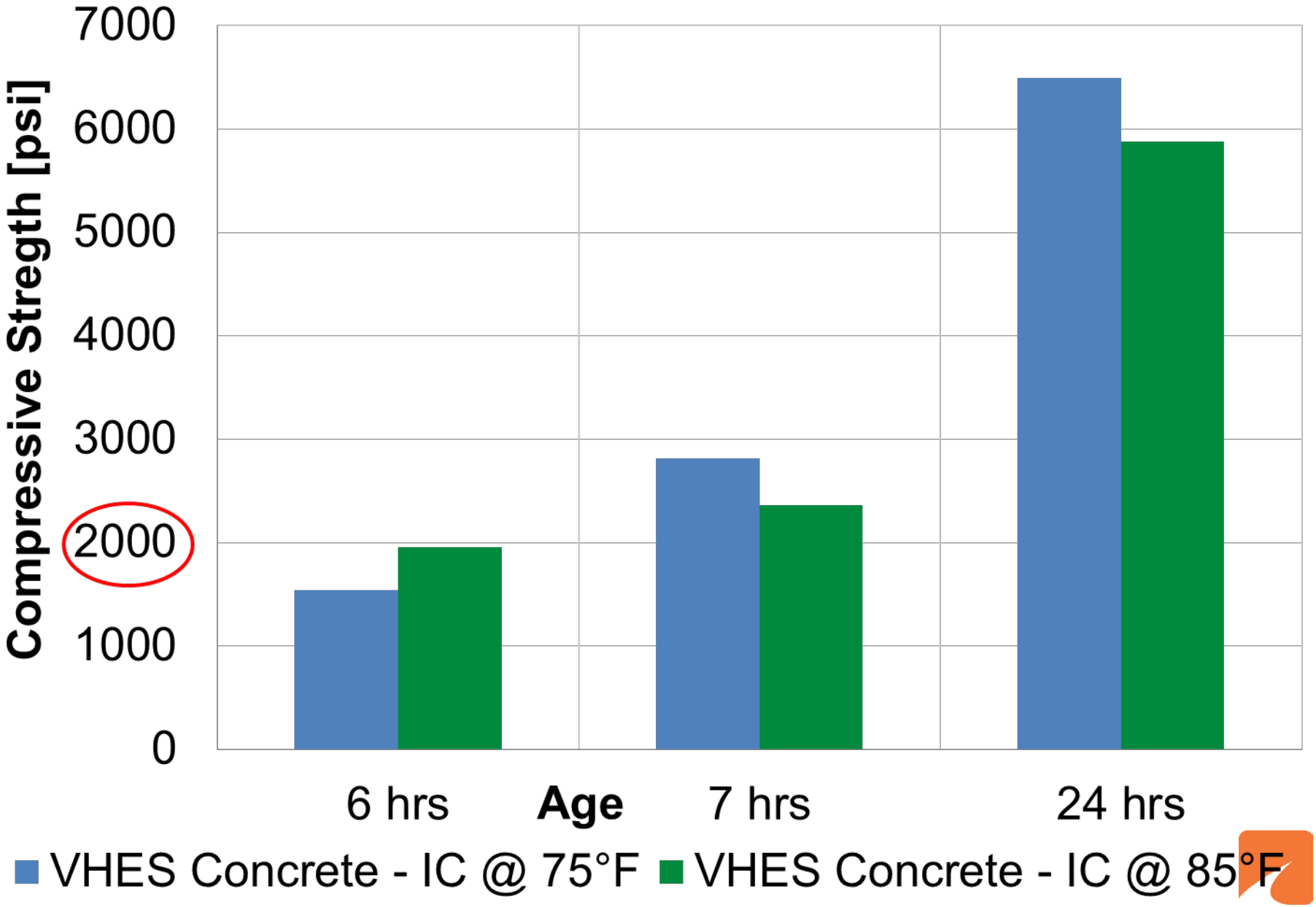

# Roller Compacted Concrete (2013-14) Staffordboro Commuter Parking Lot

Construction in different phases

- First phase (yellow) 5,000 $yd^2$
- Second phase (red and blue) 3,500 $yd^2$
- Third phase (orange) 6,300 $yd^2$.
- First phase is 8 inches and the rest 6 inches thick.
- 2-in asphalt overlay.

Near exit 143 off I-95

# Roller Compacted Concrete (RCC)

# RCC - Staffordboro Boulevard
# Sawn and Sealed Joints @ 15-ft

Panel discussion at 8 am Friday in Pavement Session

# Pervious Concrete Project

## Scope of ongoing project

- Make and test specimens in the lab
  - Varying void contents: 15 – 25%
  - Investigate clogging and maintenance
- Observe non-VDOT field projects
- Prepare a special provision

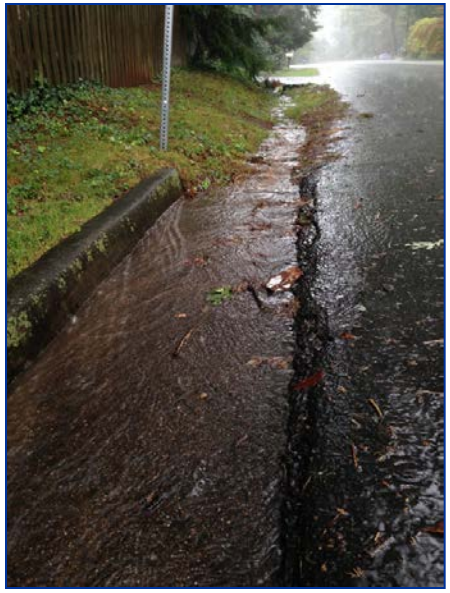

# Pervious Concrete, Fairfax County – 2015

# Pervious Concrete, Fairfax County

Pervious Specimens

Presentation by Gail Moruza at 11:15 am Friday in Pavement Session

Infiltration Test

# Composite Pavement Implementation

- SHRP 2 implementation assistance
- US 60 W
  - Henrico
  - West of I-295
  - 1979
  - 1.1 mile, two lanes

# Composite Pavement Implementation

- Composite Section
  - 8 inch Continuously Reinforced Concrete Pavement (CRCP)
  - 2 inch Asphalt (SMA) overlay
- Design life 30 years
  - Expect better performance
  - CRCP subjected to less climatic loading
  - Cost competitive
- VTRC – document lessons learned

# Bridge Projects

- West Point Bridge Investigation
- Low Cracking Concrete for Bridge Decks
- Self Consolidating Concrete
- Corrosion Resistant Prestress Strands
- Inverted-T Superstructure System
- Elastomeric Concrete Plug Joints
- Fiber-reinforced Mixtures
- Shear-key Connection Details
- Prestressed Girder Repair Methods

# Lord Delaware (2006) and Eltham (2007) Bridges West Point, Virginia

# Lord Delaware and Eltham Bridges
# Two sets of seven 4-span continuous post tensioned girders 880-ft long in each bridge (14 miles of PT duct)

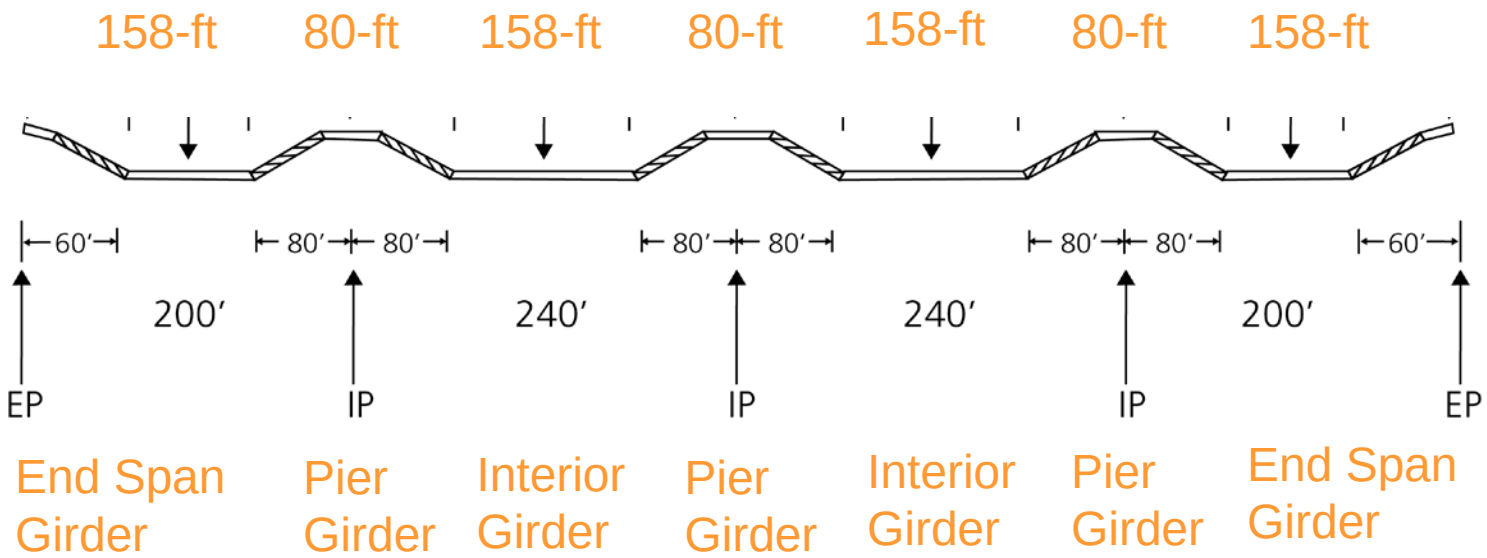


Presentation by Annette Adams at 11 am Friday in Bridge Session

# Girder Sections Showing PT Ducts

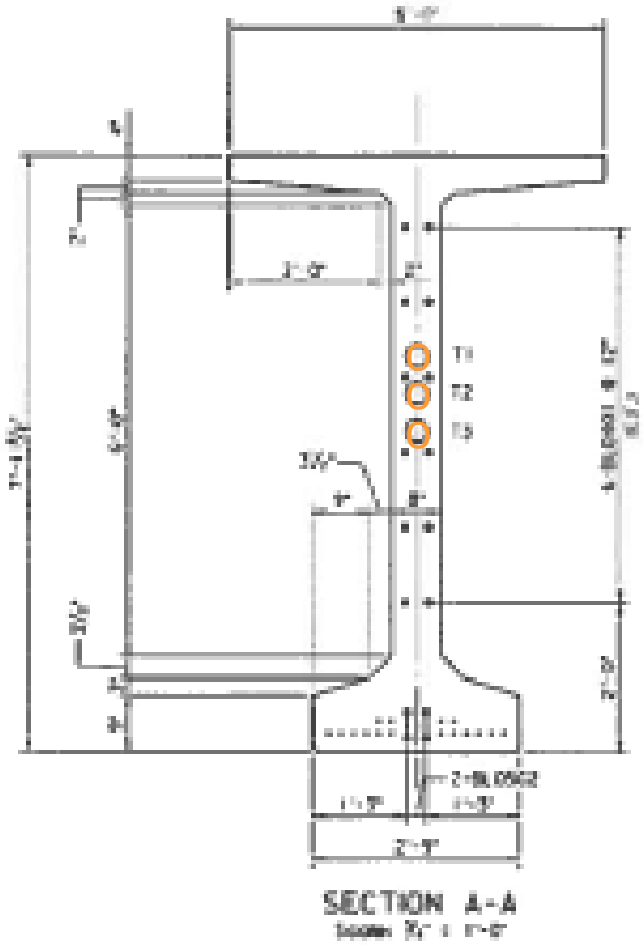


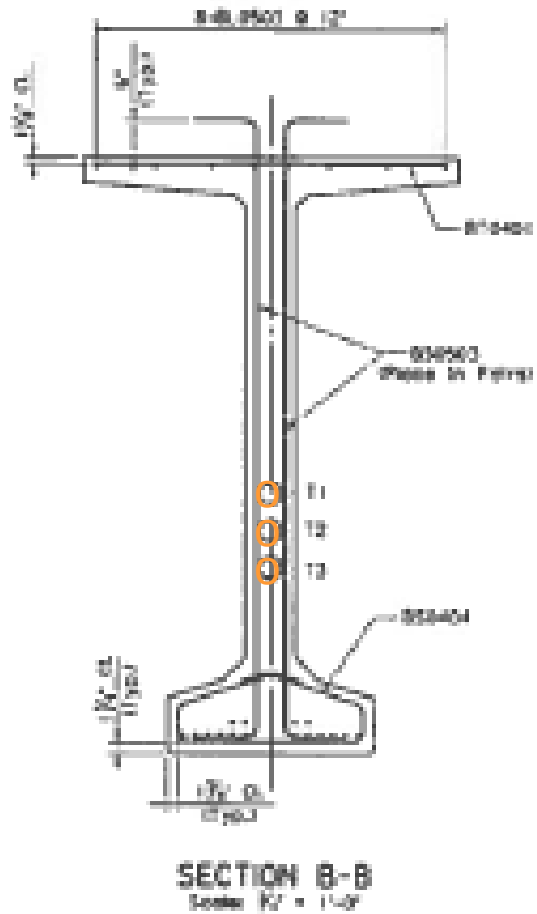


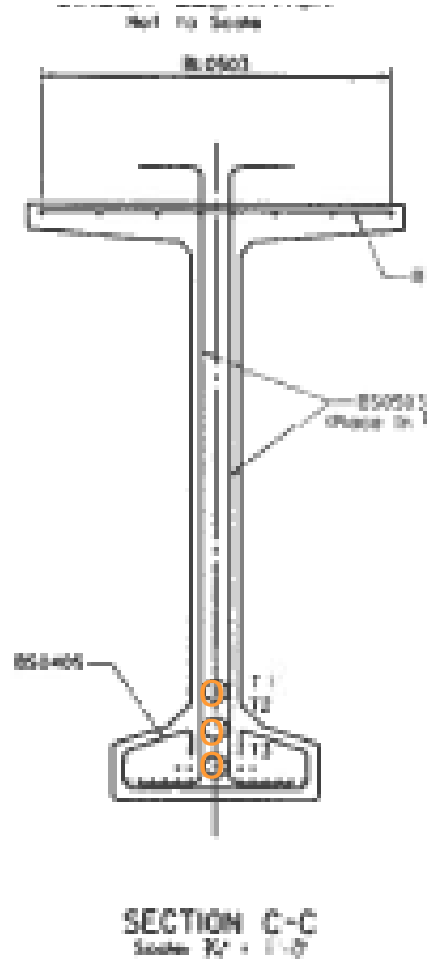

# Spall in Web Adjacent to Tendon Duct
# Lord Delaware Bridge Span L Girder 7 Tendon 2
# Spall Caused by Water in Duct Freezing

# Impact Echo Scans

## Indicating Hard Grout (web thickness = 8-in)

## Indicating Water, Soft Grout or Void (thickness > 13-in)

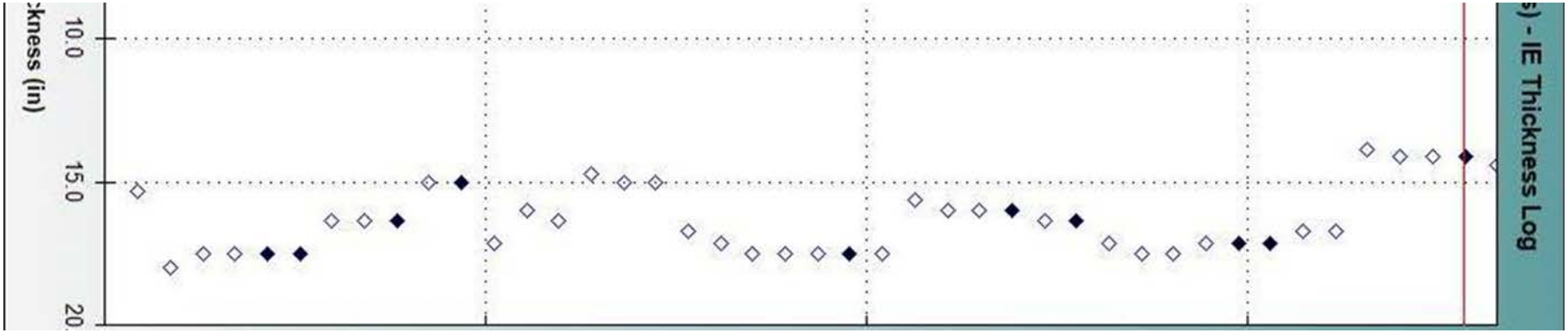

# Low Cracking Concrete for Bridge Decks

## Requirements in 2016 Road & Bridge Specification

- Normal weight concrete with low paste content (≤ 600 lb/yd3 cementitious materials) and Shrinkage Reducing Admixture (28-day shrinkage < 0.035%)
- Lightweight concrete (≤ 650 lb/yd3 cementitious materials)
- Shrinkage compensating concrete (Type K cement)

# Deck Cracking Problem

Leaking construction joints and cracks that are typically found in high performance concrete decks.

# Field Projects Completed

**Normal weight concrete with SRA (total 9 projects)**

- Staunton District: Rte.633, Rte.1421, Rte.250
- Fredericksburg: Rte.600
- Northern Virginia: I-95 Express lanes (B601,B602, B603,B607 and B609)

**Lightweight concrete (Total 7 projects)**

- Staunton: Rte.657
- Fredericksburg: Rte.3
- Culpeper: Rte.15/opal
- Lynchburg: Rte.128
- NOVA: Rte. 646, I-95 HOV lane
- Richmond: Rte. 49 Crew

**Type K:** Rte. 613 Sounthfork, Staunton

# Self Consolidating Concrete

Conventional
concrete slump test

SCC slump flow

# Self Consolidating Concrete

## Substructure Repair (2010)

Two bridge substructures at Altavista

- Route 699 bridge
- Route 712 over Route 29 bypass

Route 699 Finished backwall

Route 712 removal of concrete

# SCC Repairs - Route712

Installation of anodes

Completed SCC repair.

# Alma (2013)
# Route 340 SCC Bridge Repairs

Formwork on left,
repaired area on right.

# SCC versus Shotcrete

Rough surface

Smooth surface
Cured in formwork

Presentation by Gail Moruza at 8 am Friday in Bridge Session

# Corrosion-Resistant Prestressing Strands

Hampton Roads

Figure: Courtesy of William Hartt

Florida

Improvements in Prestressing Strand Materials

Service life: 100 years or more

- Stainless Steel (SS): 250 ksi
- Carbon Fiber Composite Cable (CFCC): 338 ksi

# Corrosion-Resistant Prestressing Strands

## Piles with CFCC - Nimmo Parkway in Virginia Beach – 2012-13

Stainless Steel
used in 4 piles

# Corrosion-Resistant Prestressing Strands

## CFCC Beams - Route 49 over Aaron's Creek, Halifax - 2015

- 82-ft long beams
- 4 beams per span
- Total of 8 beams

Opened to traffic early December 2015

Presentation by Celik Ozyildirim at 8:30 am Friday in Bridge Session

# Inverted-T Girder Superstructure

Innovative precast prestressed superstructure with cast-in-place wearing surface

Two Pilot Projects:

- Rte 360 over Chickahominy River, Mechanicsville, VA
  Normal weight concrete with spliced flanges

- Towlston Road, Great Falls
  Lightweight girders and topping with no flange splice

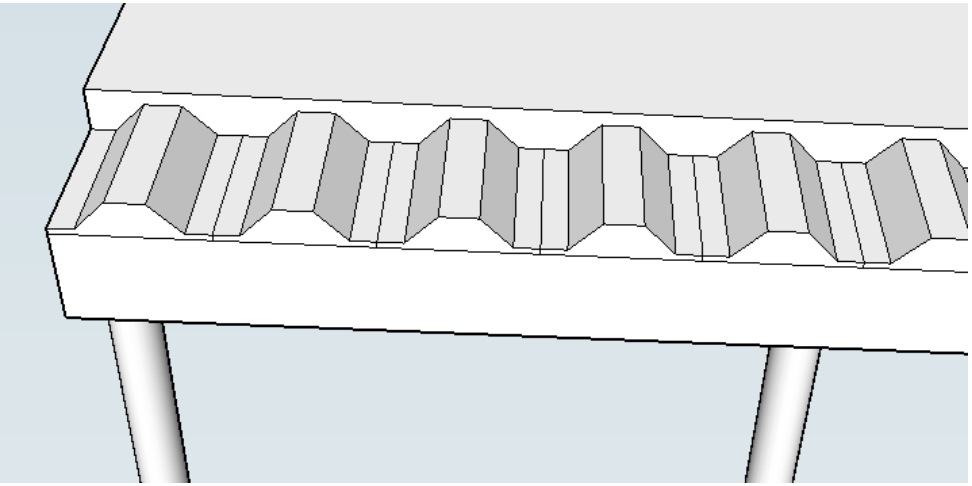

Next Steps: Developing Standard Drawings and Application Guidance
Investigating applications with Skew, longer spans, etc.

# Inverted-T Girder Superstructure

## Prestressed Inverted-T Beams

- Prestressed Concrete Inverted-T Beams
- 47 ft long
- 11° skew
- Class A5 Lightweight Concrete
- Corrosion Resistant Reinforcement

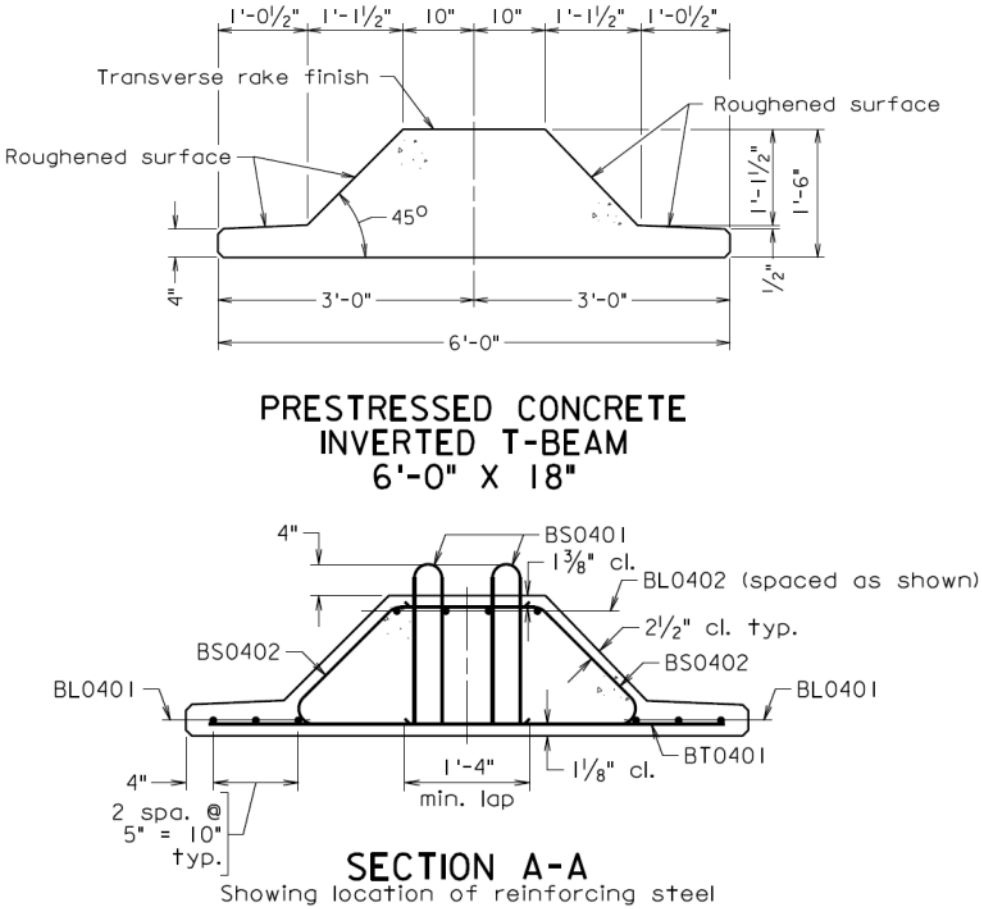

# Inverted-T Girder Superstructure

## Inverted-T Composite Deck

- Corrosion Resistant Reinforcement
- Class A4 Lightweight Concrete topping and rail

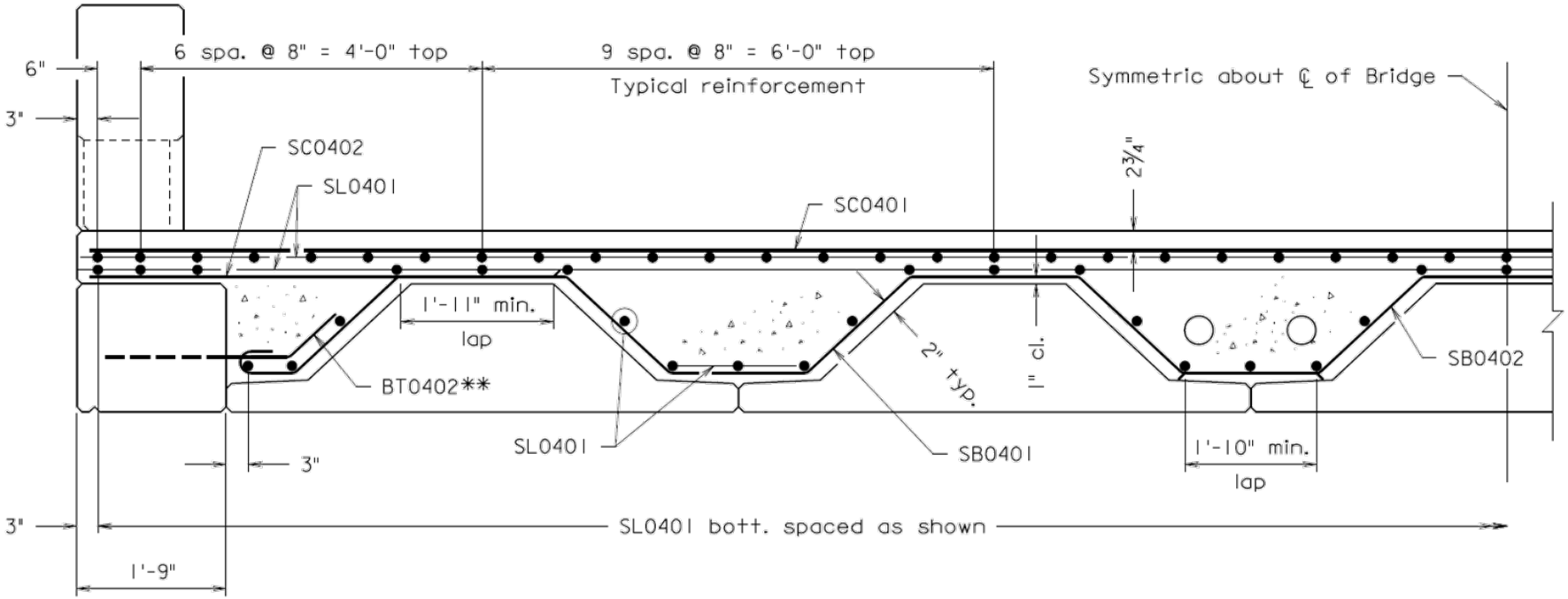

# Inverted-T Girder Superstructure

## Towlston Rd over Rocky Run, Great Falls - 2014

Placement of Inverted-T prestressed member

# Inverted-T Girder Superstructure

## Finished Product

Bridge was built between June and August 2014.
One year later, a visual of the deck showed absolutely no cracks in the deck.

# Elastomeric Concrete Plug Joints

- De-bonded zone
- Bonded/Anchor zones

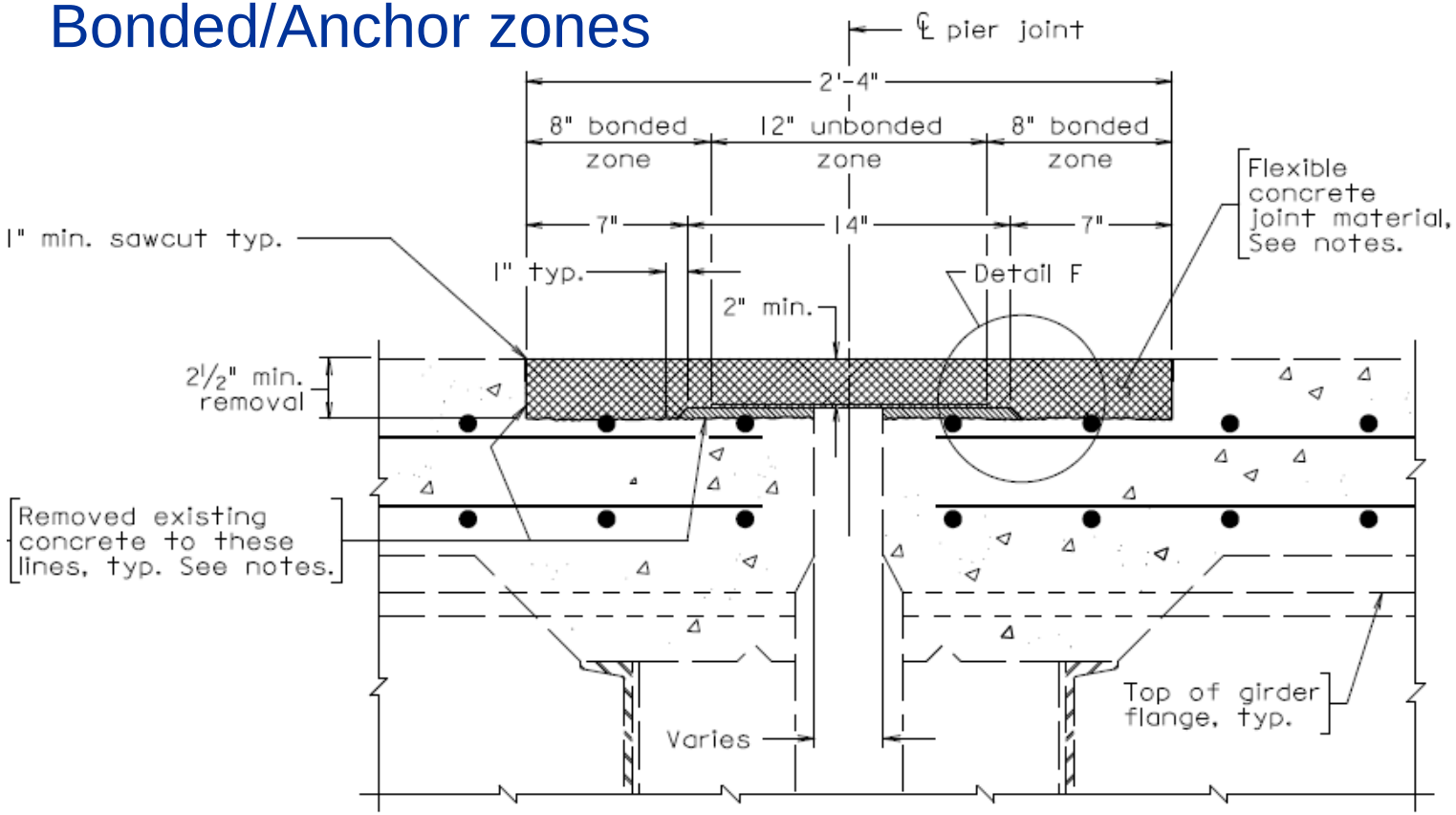

# Elastomeric Concrete Plug Joints

- Turn-up parapet

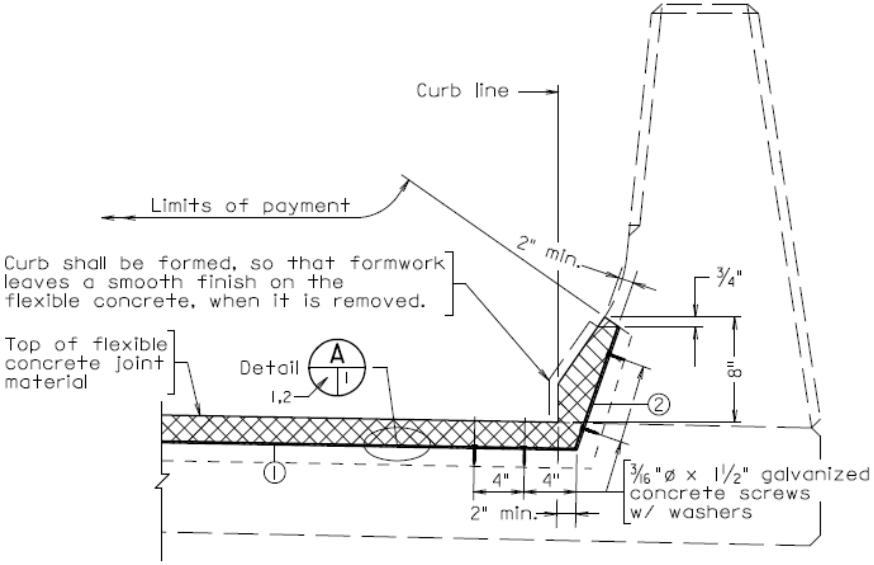


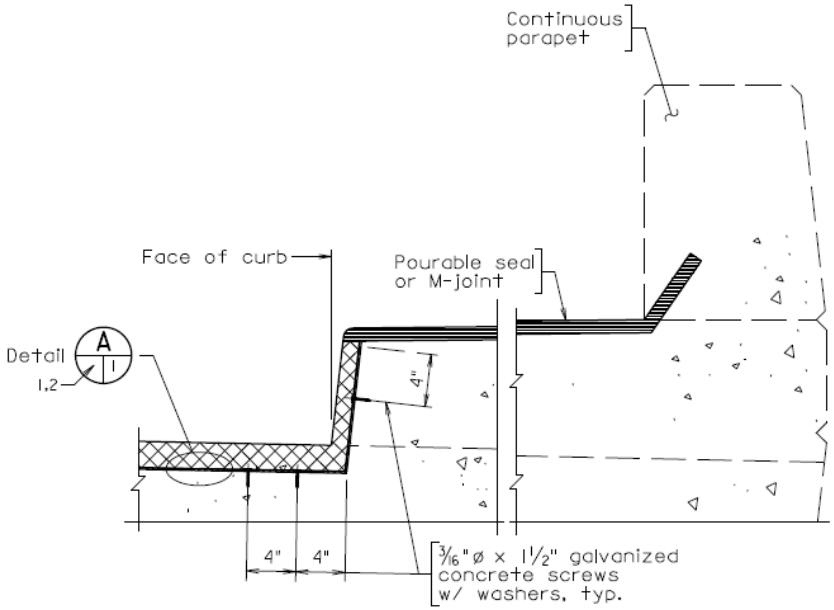

# Elastomeric Concrete Plug Joints

PTFE fabric placed on steel plate

Prepared and dried joint

# Elastomeric Concrete Plug Joints

- Melting Hot-applied Material

- Placing Hot Material

# Elastomeric Concrete Plug Joints

# High Performance Fiber Reinforced Concrete

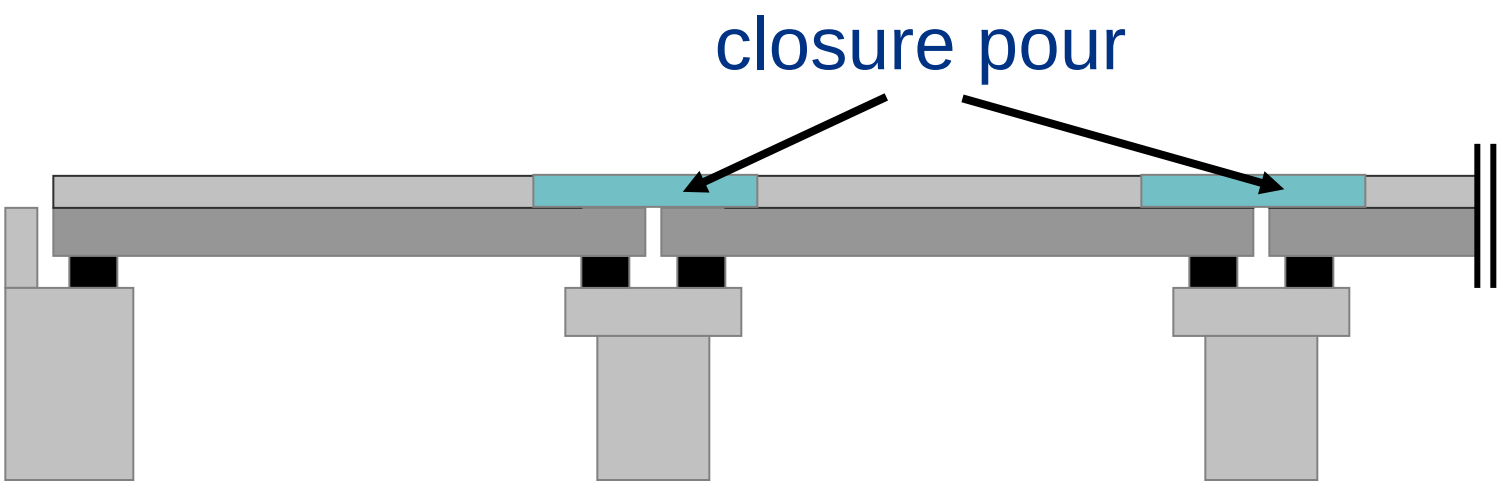


Goal: Eliminate leaking joints with crack-resistant closures

Applications: Closure Pours (Link slabs),
Longitudinal joints,
Shear-keys, etc.

# High-Performance Fiber Reinforced Concrete

PVA Fibers

Polypropylene Fibers

Steel Fibers

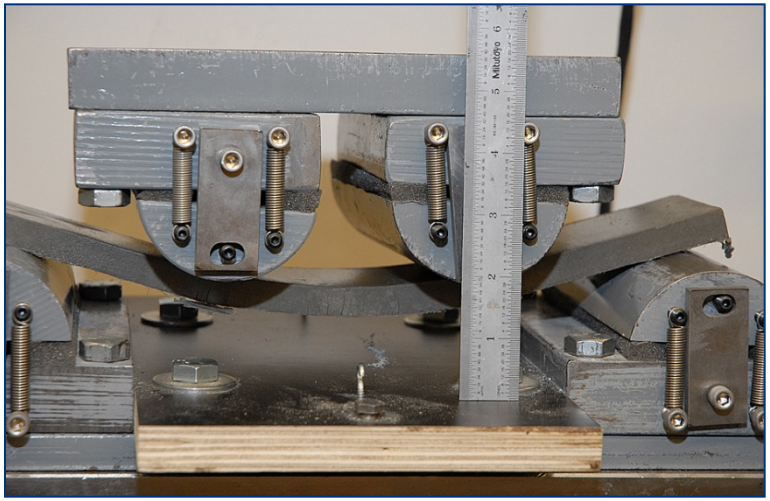

Flexure Test (Bendable Concrete) with PVA fibers

Tight cracks (<0.1 mm)

# High Performance Fiber Reinforced Concrete

## I-64 Bridge over Dunlap Creek - Covington - 2014, 2015

- Elimination of 4 Joints per bridge with closure pours
- Overlays placed over existing deck

Presentation by
Gail Moruza at 9:30 am
Friday in Bridge Session

# Mix Design: Closure Pours, Shear Key Retrofits and Overlays

- Specialized cementitious mixtures for bridge maintenance applications
- VHPC for prestress shear key details
- Fiber reinforced concrete for closures pours
- Rapid setting mixtures for deck patches
- Durable rapid setting mixtures for deck overlays

# Adjacent Beam Shear-key Retrofit

## Items considered:

- Grout vs VHPC/UHPC
- Kevlar/fiberglass strips
- Drop-in Splices

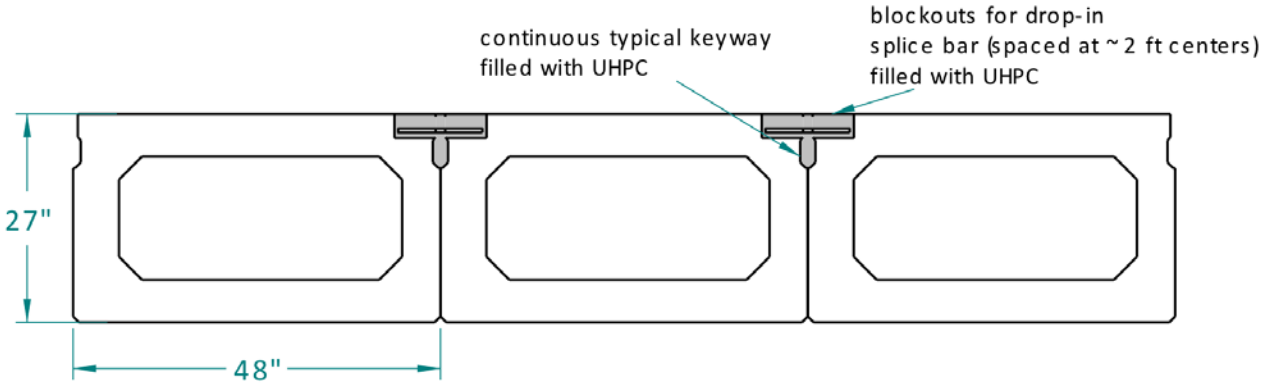

# Adjacent Beam Shear-key Retrofits

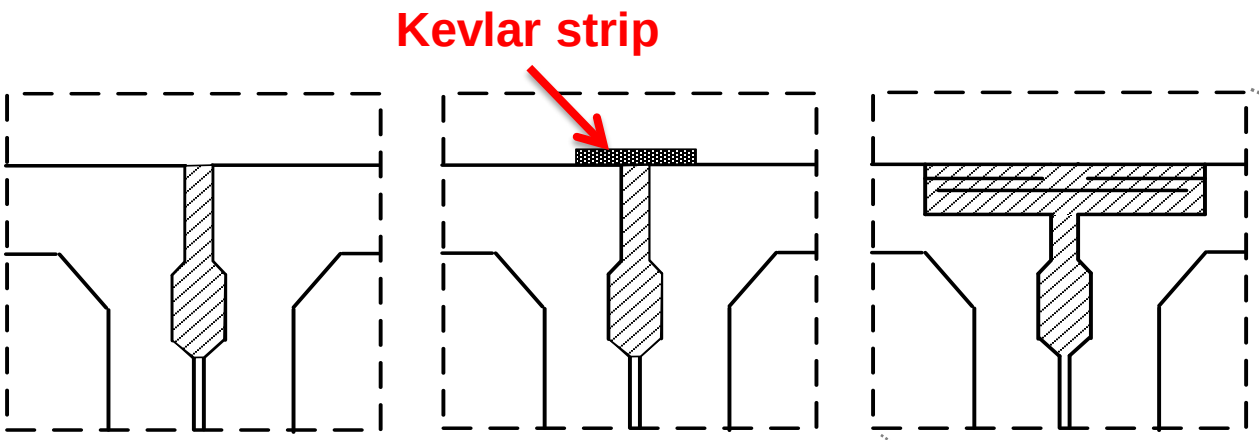


VDOT Standard

VDOT Standard with Kevlar

Proposed Detail

Note short lap-splice length

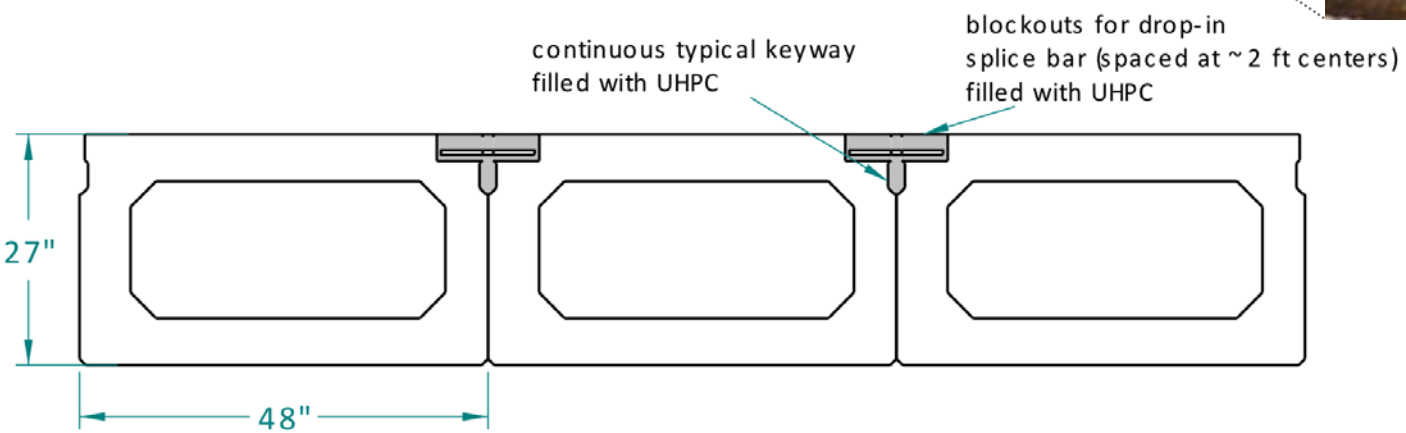

# Adjacent Beam Shear-key Retrofits

## Buffalo Branch Bridge near Staunton, VA

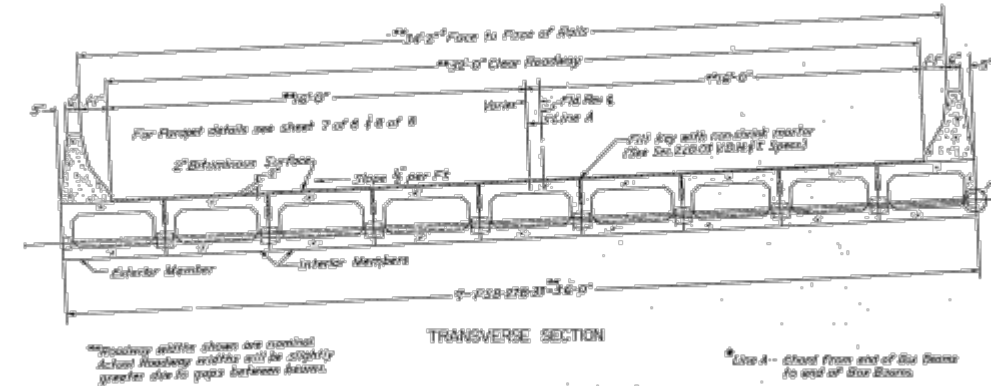

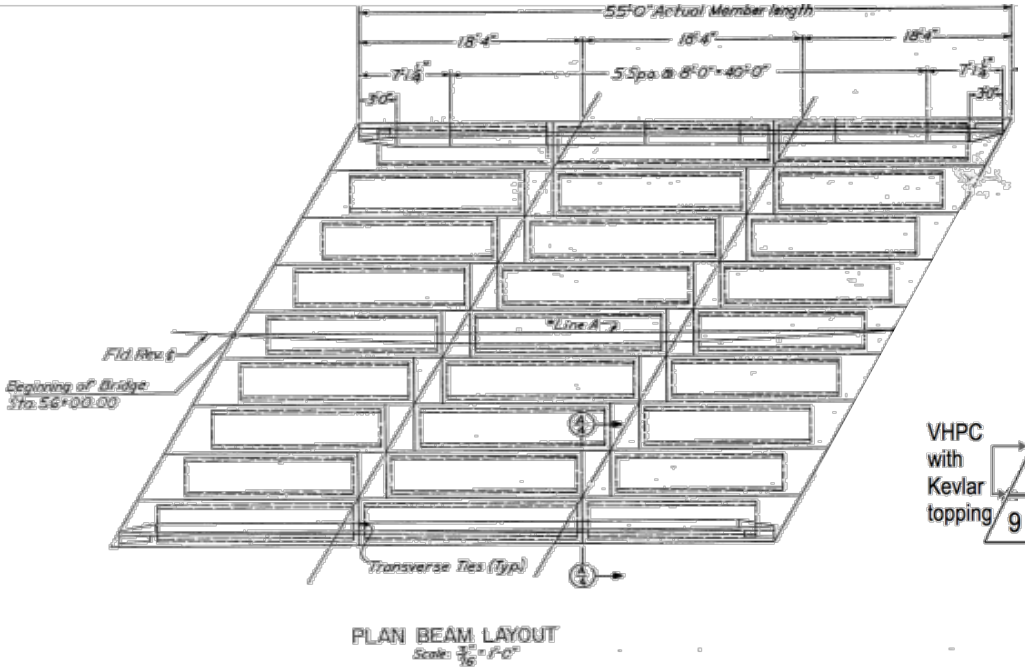


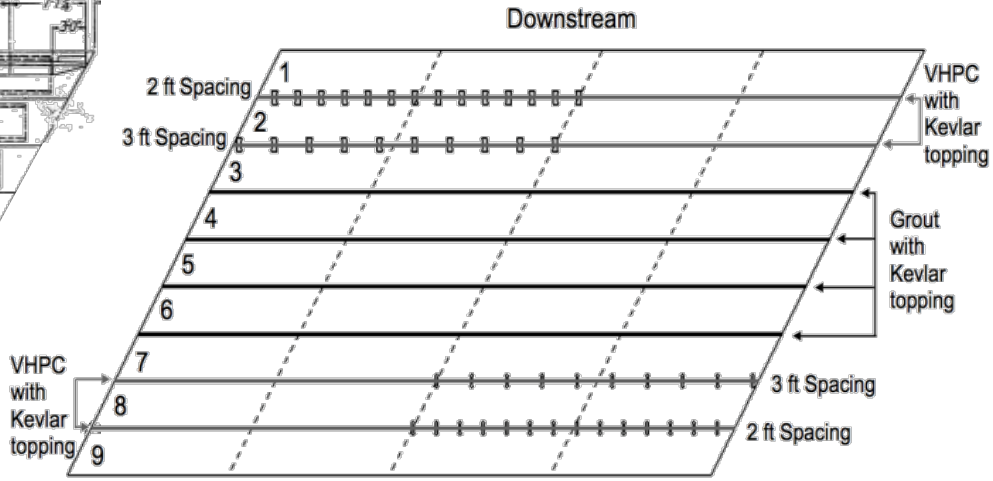


Retrofit Plan

# Adjacent Beam Shear Key Retrofit

## Buffalo Creek Bridge, Staunton - 2015

# Adjacent Beam Shear-key Retrofits

- VHPC for cost and performance
  - Cost/CY for VHPC ≅ $500
  - Cost/CY for Ductile ≅ $2,000
- Low volume roads VHPC with Kevlar
- High volume roads proposed detail with VHPC
- Regarding connection spacing:
  - 2’ spacing basis of testing program
  - FE modeling was inconclusive for evaluating other spacings
  - Field evaluation of varying spacing is recommended

# Prestressed Beam Repair Methods

- Strand Splices
- FRP wraps
- FRCM wraps

# Prestressed Beam Repair Methods
# I-81 – Arcadia Bridge

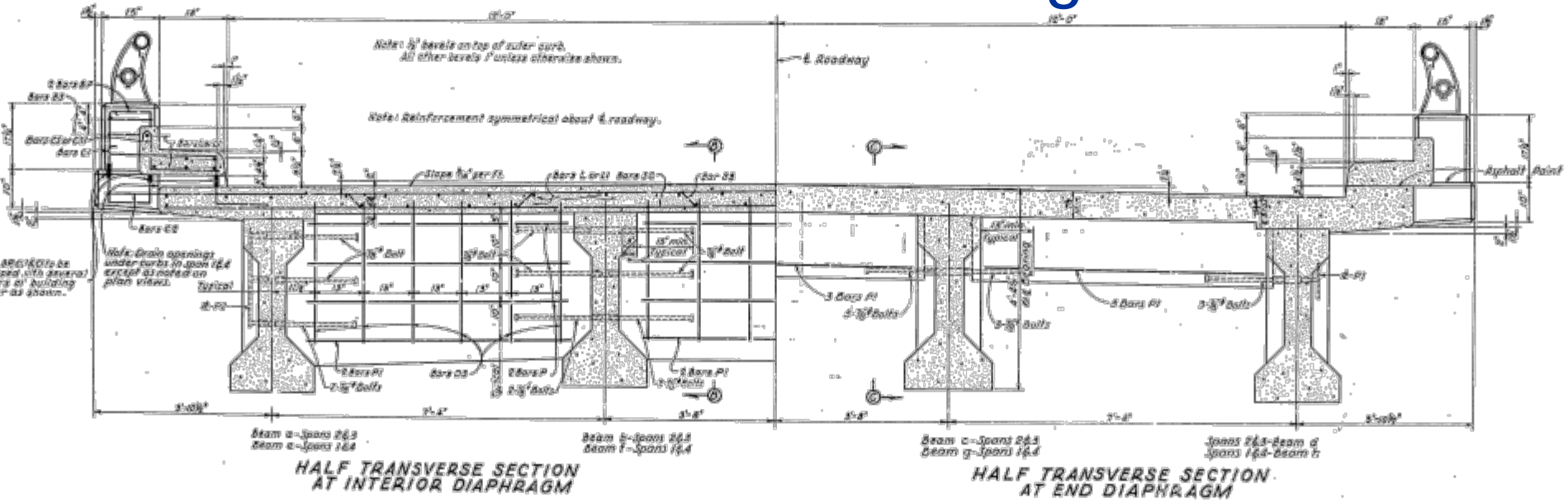


- 50 strands total
  - 8 harped strands
  - 2 top strands
- 3/8 in. diameter strand
  - Area = 0.0799 in$^2$/strand
- 250 ksi

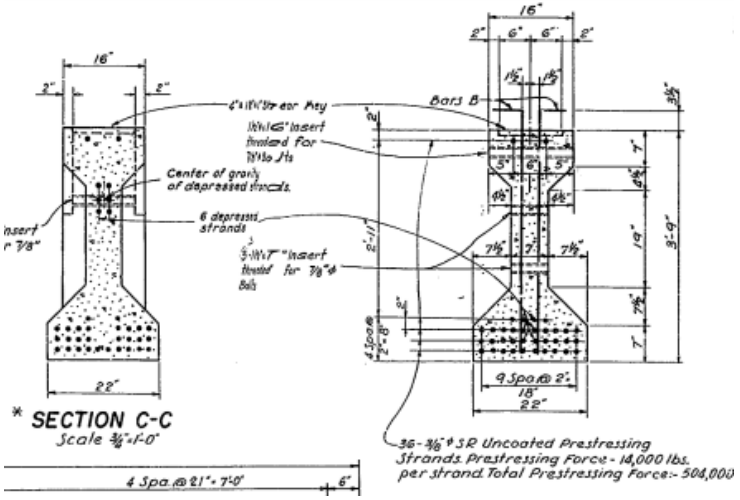

# Prestressed Beam Repair Methods

## Testing Plan – Four Beams

1. **Undamaged** state to determine initial strength
2. Damaged at mid-span with **eight strands severed – repaired with splice chucks**
3. Damaged in two locations with **four strands severed**– one repaired with **splice chucks** and other with **CFRP adhesively bonded**
4. Damaged in two locations with **four strands severed**; one repaired with **FRCM only** and other **FRCM plus splice chucks**

# Prestressed Beam Repair Methods

## Strand Splice Repair

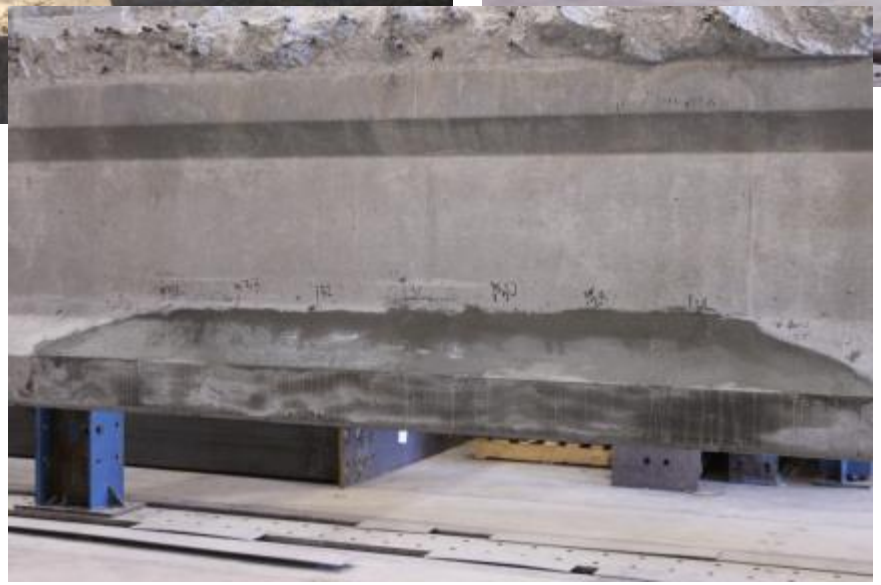

# Prestressed Beam Repair Methods

## Beam 3 – Two Repairs

4 strands spliced

# Prestressed Beam Repair Methods

## FRP Layups

# Prestressed Beam Repair Methods

## FRCM – Field Application

**Trowling Mortar over a Layer of Mesh and Pressing Mesh into Layer of Mortar**

# Prestressed Beam Repair Methods Testing and Results

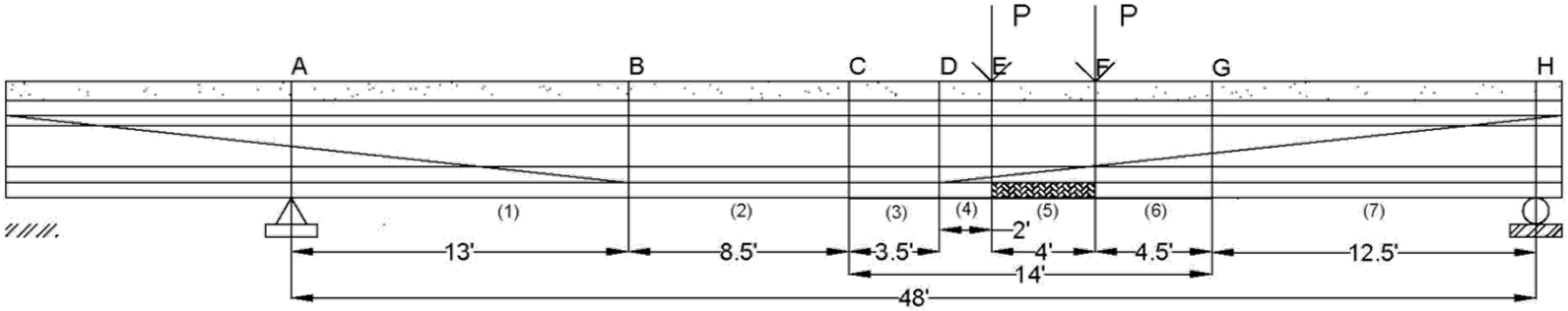


Conclusions:

- Splice chucks are easily installed and effective, though effectiveness is reduced as the number of splices in one location increases.
- FRCM and FRP repairs take similar levels of effort to install, but the FRCM cementitious matrix is more familiar to workers and requires protective gear.
- All of the tested repairs were able to return the tested beams to estimated undamaged strength based on AASHTO.
- Considering beams with full-width top flanges, the FRP and FRCM repairs with four severed and spliced strands gave greatest restored strength.

VTRC
Virginia Transportation Research Council

*We bring innovation to transportation.*

# Concrete Research Program at VTRC

Questions?