Roller Compacted Concrete Paving Panel: VDOT Perspective

March 4th, 2016

Tommy Schinkel

Richmond District Materials

Project Details

- Project Number: 0064-127-919, N501
- Order No. G90
- UPC 106235
- Prime Contractor: Allan Myers VA, Inc. (American Infrastructure-VA, Inc)
  - RCC sub: Robert Smith, Inc.
  - Material Supplier: Powhatan Ready Mixed Concrete
- Construction Staff: ACE – Keith Rider,
  CM- John Arms

Project Details continued

- Three ramps received RCC
  - I-295sb cd road to I-64 wb cd road
  - I-295 sb to rte 60 wb
  - I-295 sb to rte 60 eb
- Estimated RCC quantity – 7,997 SY
- Construction of Ramps occurred in October

IS-295 AT IS-64
RAMP FR I-295 SB CD ROAD TO I-64 WB CD ROAD

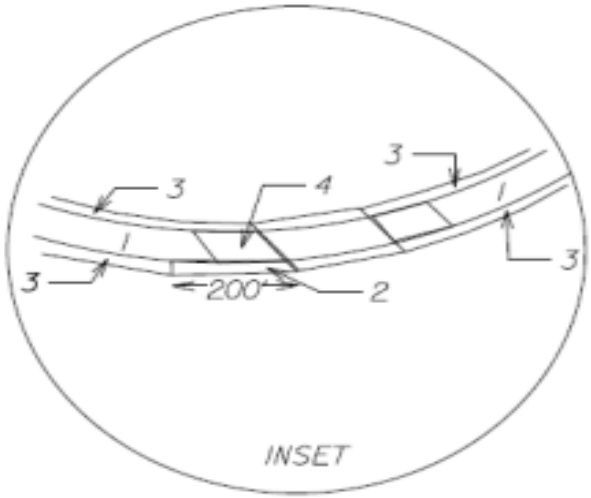

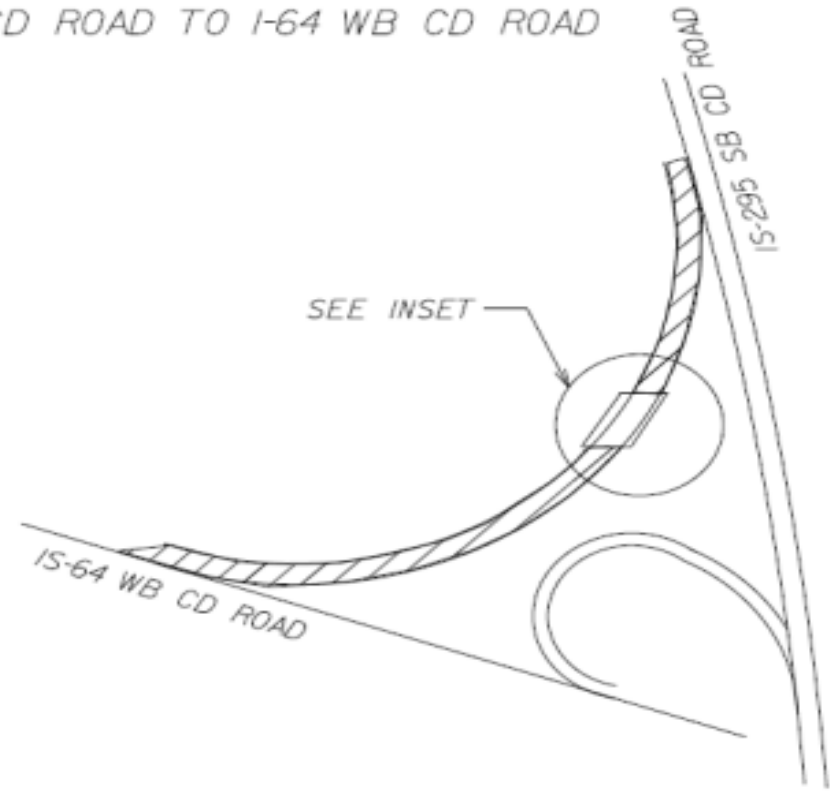

Not To Scale

1 RECONSTRUCT EXIST CRCP SECTIONS WITH 6" AGGR.BASE MATL TY I NO.21B AND 6" ROLLER COMPACTED CONCRETE AND 2" ASPH CONC INTERMEDIATE TY IM-19.0E AND 1.5" ASPH SURFACE CONC TY SM-9.5E.PAVE TO BE TIED DOWN AT BRIDGE APPROACHES AND AT GORES AT ASPHALT/CONCRETE JOINTS

2 DEPRESSED ASPH LEFT SHLD.START ON SOUTH END OF BRIDGE FOR APPROX 200'; OVERLAY WITH 3.5" AND VAR ASPH WITH VARIABLE DEPTH (APPROX.2.5") ASPHALT CONCRETE TY IM-19.0E AND ASPHALT CONCRETE TY SM-9.5E TO CORRECT SETTLEMENT ISSUE

3 REMAINING SHOULDERS,MILL 1" AND OVERLAY WITH 1.5" ASPH SURFACE CONC TY SM-9.5E.SHOULDER PAVE TO BE TIED DOWN AT APPROACHES TO BRIDGE

4 REPLACE FAULTED & CRACKED JRCP SLAB AND AGGR SUB-BASE AT SOUTH BRIDGE APPROACH WITH HYDRAULIC CEMENT PATCH CONC PAVE TY N-A 9". SEE TYPICAL FOR APPROACH SLAB DETAIL. CLEAN AND SEAL JRCP JOINTS AT BOTH BRIDGE APPROACHES.

**USE ACOT-1 TRANSITION STANDARD TO TIE RAMP TO EXIST PAVEMENT.

UPC 106235
RAMP PAVEMENT DESCRIPTION DETAIL
FR I-295 SB TO RTE 60 EB

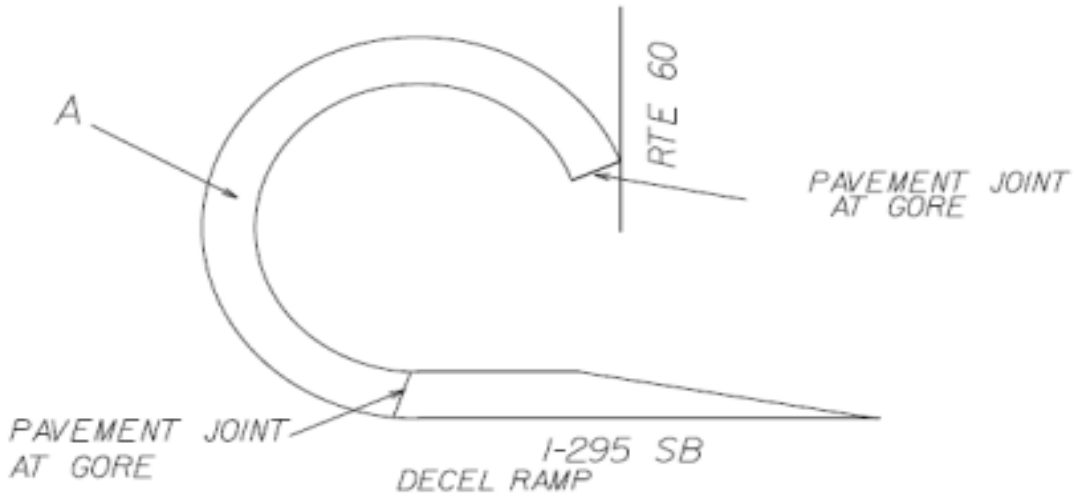

A RECONSTRUCT EXIST JRCP SECTIONS WITH 6" AGGR.BASE MATL.TY I NO.21B AND 6" ROLLER COMPACTED CONCRETE AND 2" ASPH CONC INTERMEDIATE TY IM-19.0E AND 1.5" ASPH SURFACE CONC TY SM-9.5E.PAVE TO BE TIED DOWN AT GORES AT PAVEMENT JOINTS

**USE ACOT-I TRANSITION STANDARD TO TIE RAMP TO EXIST PAVEMENT AT PAVEMENT JOINTS AT GORES.

Not To Scale

UPC 106235
RAMP PAVEMENT DESCRIPTION DETAIL
FR I-295 SB TO RTE 60 WB

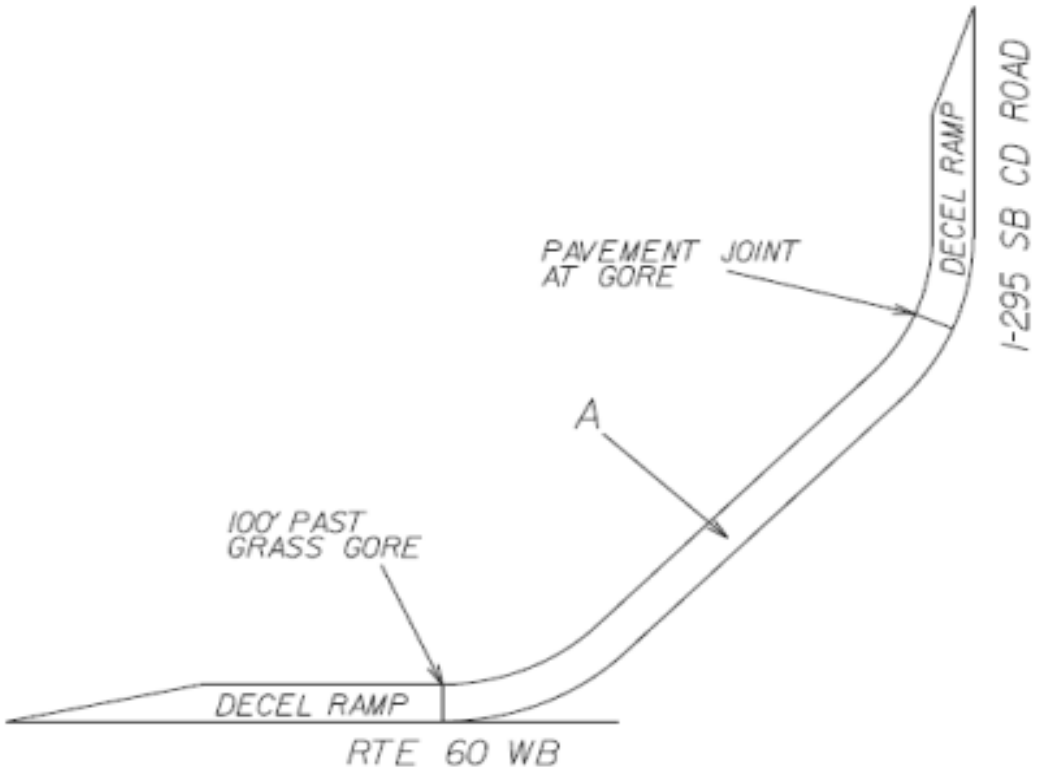

A RECONSTRUCT EXIST CRCP SECTIONS WITH 6" AGGR.BASE MATL TY I NO.21B AND 6" ROLLER COMPACTED CONCRETE AND 2" ASPH CONC INTERMEDIATE TY IM-19.0E AND 1.5" ASPH SURFACE CONC TY SM-9.5E.FROM PAVEMENT JOINT AT I-295 CD LANE TO 100' PAST GRASS GORE AT RTE 60.

**USE ACOT-I TRANSITION STANDARD TO TIE RAMP TO EXIST PAVEMENT.

Not To Scale

How were the locations chosen? / Why Richmond chose RCC?

- Risk
- Serviceability
- Traffic Volumes
- Current Conditions
- Cost
- Time
- 1 Day >2000 PSI, 7 Day >4000 PSI, 28 Day > 5000 PSI

Deliverables

- Mix Design
- Paving Plan
- Weather Precautions proposals
- Plan for curing

Target Moisture Content	mass of compacted mold + soil	mass of mold	mass of compacted soil	wet density	mass of wet soil + can	mass of dry soil + can	mass of water	mass of can	mass of dry soil	moisture content (%)	dry density (g/cc)	Dry Density (lb/ft^3)	Wet Density (lb/ft^3)
5.0%	11455.6	6580.4	4875.2	2.29	4411.1	4245.4	165.7	249.8	3995.6	4.15	2.20	137.4182	143.1171
6.0%	11728.2	6580.4	5147.8	2.42	4535.3	4313.4	221.9	249.9	4063.5	5.46	2.30	143.2945	151.1195
7.0%	11719.2	6580.4	5138.8	2.42	4365.1	4108.3	256.8	256.9	3851.4	6.67	2.27	141.4255	150.8553
8.0%	11611.8	6580.2	5031.6	2.37	4348.2	4058.1	290.1	269.5	3788.6	7.66	2.20	137.2025	147.7084

ASTM D 1557-12; 56,000 ft-lbf/ft^3, Method "C" (Six Inch [152.4 mm] Mold, Five Layers, Fifty-Six Blows Per Layer)

Volume of molds 915cm^3 = 2125.62

Richmond RCC

All masses are reported in grams and volumes in cm^3

June 29,2015

Equation used for dry density is $\rho_w/(1+w/100)$

MDD:	**143.5**	**lb/ft^3**	**Wet Density:**	**151.7**	**lb/ft^3**
OMC:	**5.70%**		98%	148.6	**lb/ft^3**
			96%	145.6	**lb/ft^3**

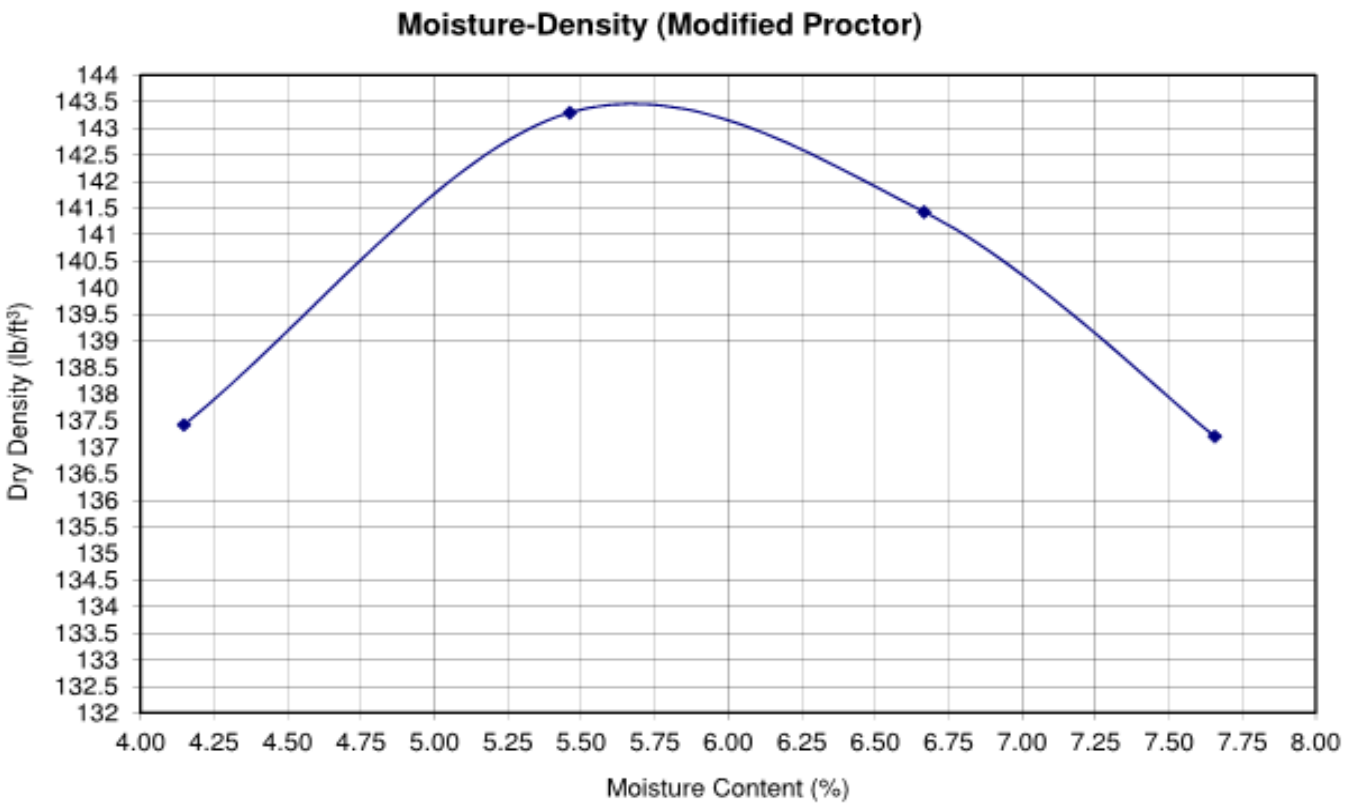

UVEX

Challenges encountered

- MOT
- Weather Hurricane Joaquin
- Moisture
- Condition of Agg. Base
- Testing: Mix and Density

Condition of Agg. Base

Damaged Agg. Base

Damaged Agg. Base

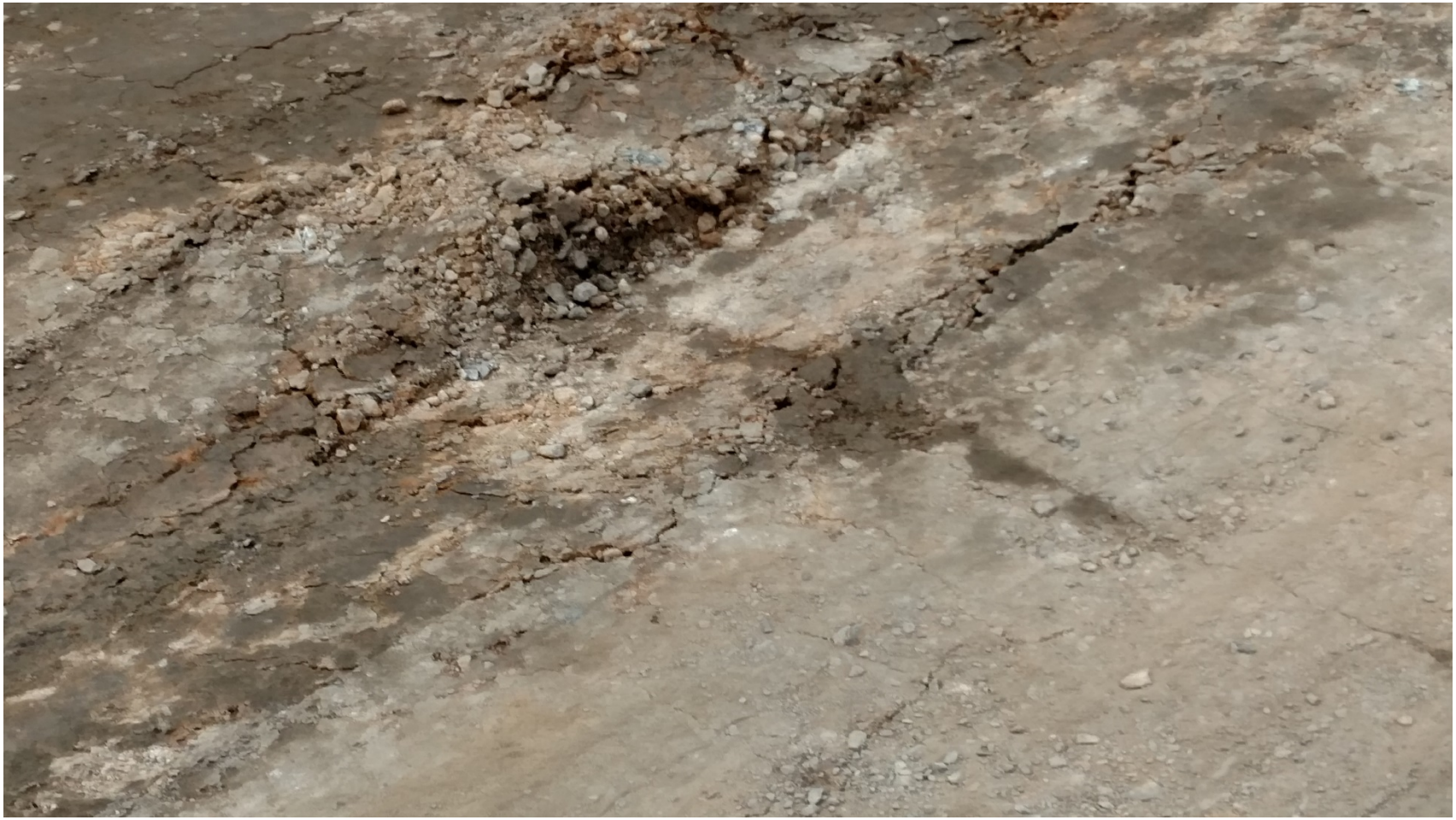

Density Testing

Strength Testing

Strength Testing Continued

RCC – The Next Day

RCC - Cores

Lessons Learned

- Importance of Trial Section
- Importance of Trial Section
- Control Moisture
- Curing
- Clear plan of testing
- Good lines of communication

Roller Compacted Concrete Paving Panel: VDOT Perspective

March 4th, 2016

Tommy Schinkel

Richmond District Materials

Powhatan Ready Mix

A TITAN AMERICA COMPANY

Roller Compacted Concrete

ENERGY STAR PARTNER

- What is Roller Compacted Concrete (RCC)?
- Central Mix or pug mill
- VDOT Project I-295 and I-64 On Ramps (F-29)
- Future applications

Outline

Powhatan Ready Mix
A TITAN AMERICA COMPANY

ENERGY STAR PARTNER

- Roller Compacted Concrete (RCC) is a high density, low moisture concrete. The material is placed on a compacted base material, and has a vibratory paver move across the surface. The aggregate gradation plays a key role in the design phase.

Roller Compacted Concrete (RCC)

Powhatan Ready Mix
A TITAN AMERICA COMPANY

Concerted effort and communication between Allan Myers (AI), VDOT, Robert Smith Inc. and PRM

Powhatan Ready Mix
A TITAN AMERICA COMPANY

Moisture control is key in placement phase

Powhatan Ready Mix
A TITAN AMERICA COMPANY

What a difference a gallon makes

Powhatan Ready Mix
A TITAN AMERICA COMPANY

Smooth Sailing!

Powhatan Ready Mix
A TITAN AMERICA COMPANY

ENERGY STAR PARTNER

Central Mix or Pug Mill Dry Batch

Powhatan Ready Mix
A TITAN AMERICA COMPANY

WALKING ON FRESHLY PLACED MATERIAL

Powhatan Ready Mix
A TITAN AMERICA COMPANY

- The project called for the RCC to be the intermediate between the base and asphalt. One of the VDOT engineers referred to it as CTA on steroids.
- VTRC used it as a research project

Route 60 ramps

Powhatan Ready Mix
A TITAN AMERICA COMPANY

ENERGY STAR PARTNER

VDOT F-29 RCC

Powhatan Ready Mix
A TITAN AMERICA COMPANY

Feeding The Paver

Powhatan Ready Mix
A TITAN AMERICA COMPANY

ENERGY STAR PARTNER

Easy unload from Dump beds

Powhatan Ready Mix
A TITAN AMERICA COMPANY

RCC In The Paver

ENERGY STAR PARTNER

Powhatan Ready Mix
A TITAN AMERICA COMPANY

Paver In Action

Powhatan Ready Mix
A TITAN AMERICA COMPANY

Standing On Fresh Material

ENERGY STAR PARTNER

Powhatan Ready Mix
A TITAN AMERICA COMPANY

- Paving
  - Intersections
  - Parking lots
  - On ramps

Future Applications

ENERGY STAR PARTNER
Powhatan Ready Mix
A TITAN AMERICA COMPANY

- Product was easy to come off the dump trucks
- Nuclear gauge readings of 96% (Before Roller)
- 4000 PSI design achieving 3000 @ 24 hours
- 4300 @ 7 Days and 5400 @ 28 Days
- Approximately 1600 Cubic Yards placed
- Customer was very satisfied with product

Results

Powhatan Ready Mix
A TITAN AMERICA COMPANY

VDOT RCC PROJECT

WHY VDOT RCC WAS A GOOD FIT FOR ROBERT SMITH INC

LOCATION – RSI sat down with Powhatan Ready Mix & discussed using their central mix plant prior to the project bidding. All 3 ramps where all within 45 mins.

The overall proximity of this project was favorable. Robert Smith Inc tries to strategically enter markets that are centrally located. Richmond served as a great “flagship” opportunity for RSI to enter into the VA market. Even though RCC was not the finished surface, we wanted to build relationships locally and on a state level

VDOT RCC PROJECT

PAVEMENT LAYOUT – **EACH RAMP HAD SAME WIDTH; RSI WAS ABLE TO BUILD OUR MACHINE OUT & KEEP IT THERE**

VDOT RCC PROJECT

MEANS & METHODS – RCC HAS ADAPTED OVER THE YEARS; RSI WANTED TO INSTALL A PROJECT SHOWING VDOT THESE CHANGES

VDOT RCC PROJECT

CONCLUSION:

RSI WANTED TO BE A PART OF VDOT "TRYING" RCC AGAIN
(we knew we could meet VDOTS needs / specs)

POWHATAN HAD A CENTRAL MIX PLANT LOCATED CLOSE BY
(the idea that RCC only had to travel 30-35 minutes was favorable)

AMYERS, VDOT, POWHATAN HAD A PROGRESSIVE ATTITUDE
(everyone involved had a positive/flexible mentality in "trying" RCC)

SCOPE OF WORK WASN'T OUT OF THE ORDINARY
(ramps were easier to pave than some sites we've installed)

THE YARDAGE MADE IT APPLICABLE TO MOBILIZE OUR MACHINE
(at 1300 + Cubic Yards, it made it worth everyone's time)

RCC IS ADAPTING & GROWING INTO ALL MARKETS –
(RCC is being used in applications like never before; smaller scale)
(RSI wanted to bring it to the local & state (IN VA) level in hopes of showing that it can be done successfully & used more often)