VTRC
Virginia Transportation Research Council

We bring innovation to transportation.

CARBON FIBER COMPOSITE CABLE (CFCC) in PRESTRESSED CONCRETE PILES and BEAMS

Celik Ozyildirim, Ph.D., PE., Virginia Transportation Research Council
Stephen Sharp, Ph.D., PE., Virginia Transportation Research Council
Audrey Moruza, Virginia Transportation Research Council

VA Concrete Conference 2016

Outline

- Corrosion of steel damages concrete
- Corrosion-free option
  - CFCC (carbon fiber composite cable) or CFRP (carbon fiber reinforced polymer)
- VDOT Experience
  - CFCC Piles
  - CFCC Beams

Corrosion Damaged Bridges

One of the leading causes of bridge deterioration is corrosion of the steel.

Conventional Steel Improvements at VDOT

- VDOT has improved the corrosion resistance of steel reinforced bridge decks using CRR
- Are there other areas of the structure we should look at like prestressed elements?

Corrosion of Prestressing Strand

Not VDOT

Figure Courtesy of William Hartt

Improvements in Prestressing Strands

- Service life: 100 years or more
  - Stainless Steel (SS): 250 ksi
  - Carbon Fiber Composite Cable (CFCC): 338 ksi

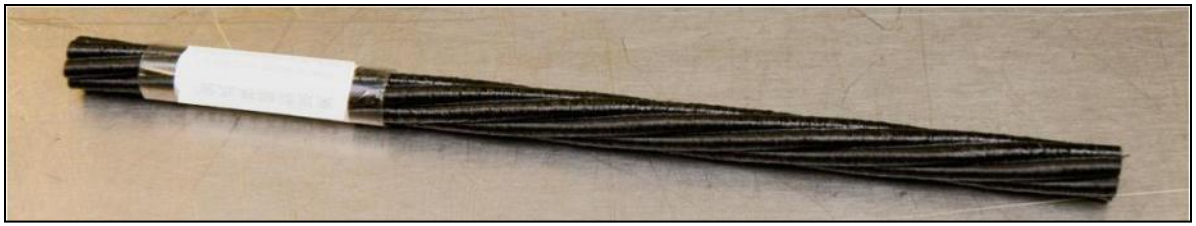

World's First Bridge Using Carbon Fiber Composite Cable (CFCC)

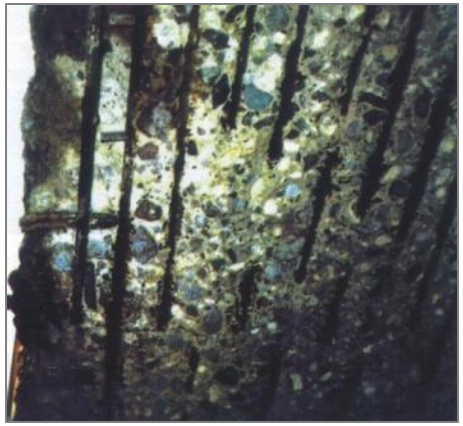

Initial Bridge
(20 yrs service)

Replacement Bridge
(20 yrs service)

- Shinmiya Bridge
  - Coastal Structure
  - Replacement built in 1988
  - Underside of deck corrosion free

Other CFCC Applications

- More than 130 applications by 2009
- Prestressed and Post-tensioning
- Suspension Bridge Main Cable
- Ground Anchor
- Stay Cable

Michigan Post Tensioned

Maine Cable Stayed

CFCC Materials

- Directionally Strong
- Lightweight
- Corrosion Free

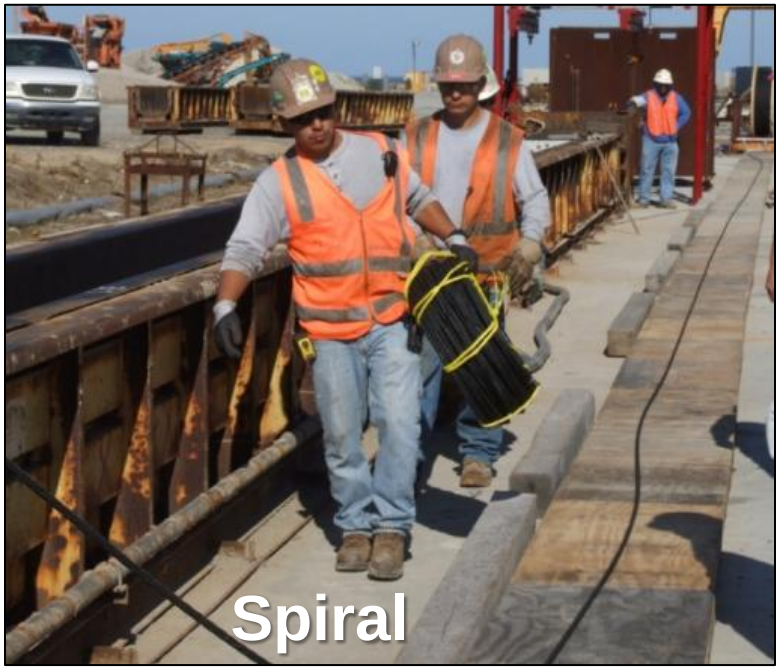

Comparison of Properties

Strand Properties	ASTM A416	CFCC	Stainless Steel
Tensile strength (min), ksi	270	338	250
Elastic Modulus, ksi	28,600	22,500	24,500
Elongation at break, %	3.5 (min)	1.7	1.47

Initial Pile Research Plan

- 18 piles would be fabricated using carbon fiber composite cable reinforcement in place of traditional steel strand and spiral
- Each 24-in pile would have16 strands 0.6 in diameter CFCC

VDOT's First Application

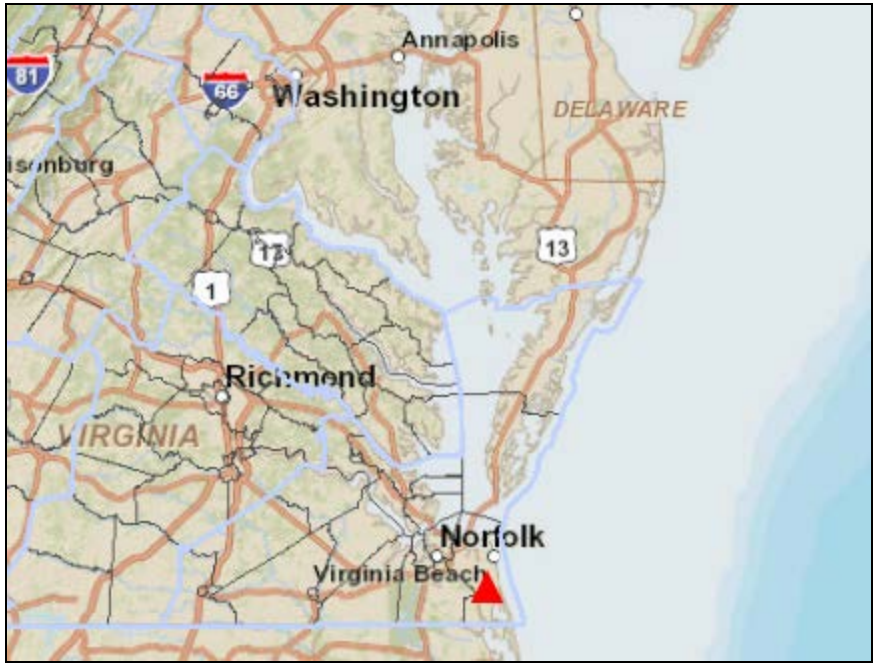

- VDOT Nimmo Parkway in Virginia Beach
- This is also the first application of CFCC bridge piles in the world

Pile Fabrication

- Bayshore Concrete Products fabricated all the piles
  - Two test piles fabricated at facility in Cape Charles, VA (2012)
  - Sixteen production piles fabricated at facility in Chesapeake, VA (2013)

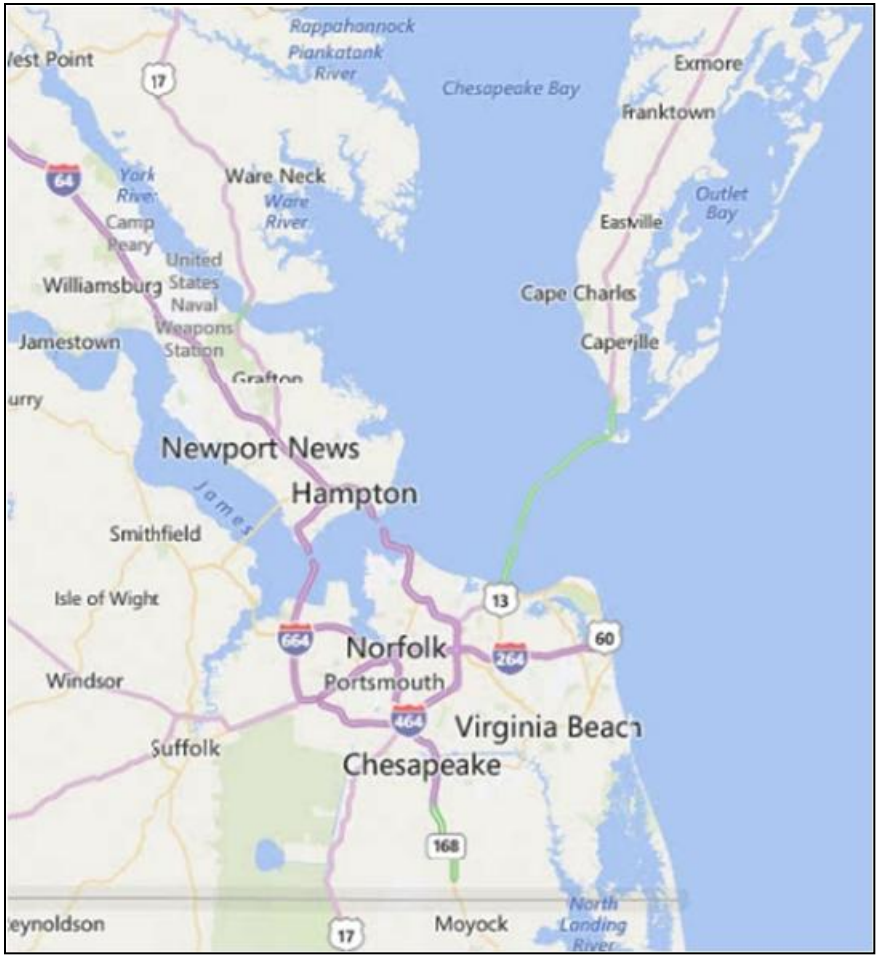

Overview of Casting Areas

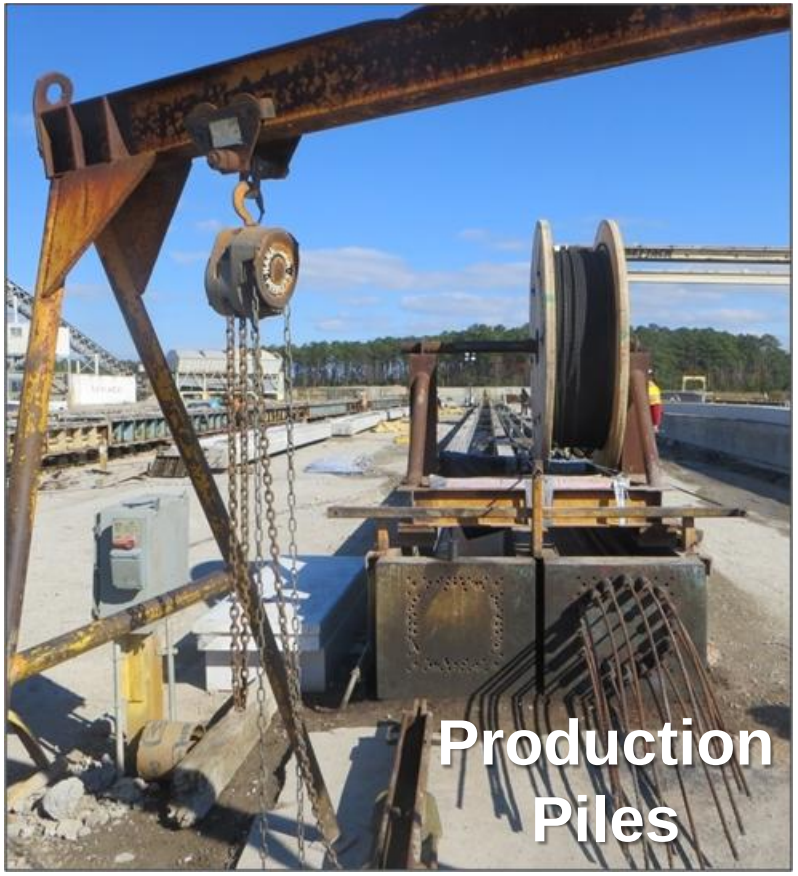

180-ft (Cape Charles) and 320-ft (Chesapeake) long beds with steam curing pipes at both plants

End Preparation

The Coupler (AKA. Double Chuck)

- Several parts required to properly assemble coupler

CFCC Details

Avoid metal contact

- Plastic Tie
- Circular Spiral

- Removable Lift Device

Stressing

Stressed

- **5 kips**
- **15 kips**
- **25 kips**
- **34 kips**

Concrete Placement and Consolidation

Standard placement using rubber tipped vibrator ends

CFCC Pile Concrete Placed and Cured

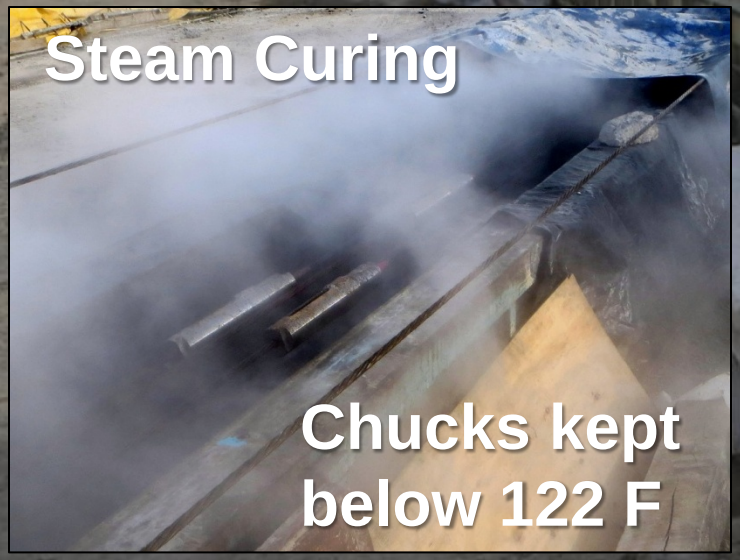

Pile Removed From Forms

CFCC corrosion-free pile behavior similar to standard pile

Piles are Transported to Site

Preparing Piles for Driving

- Piles are lifted and positioned for driving
- Test piles were instrumented
- Successful Driving

Final Pile Layout

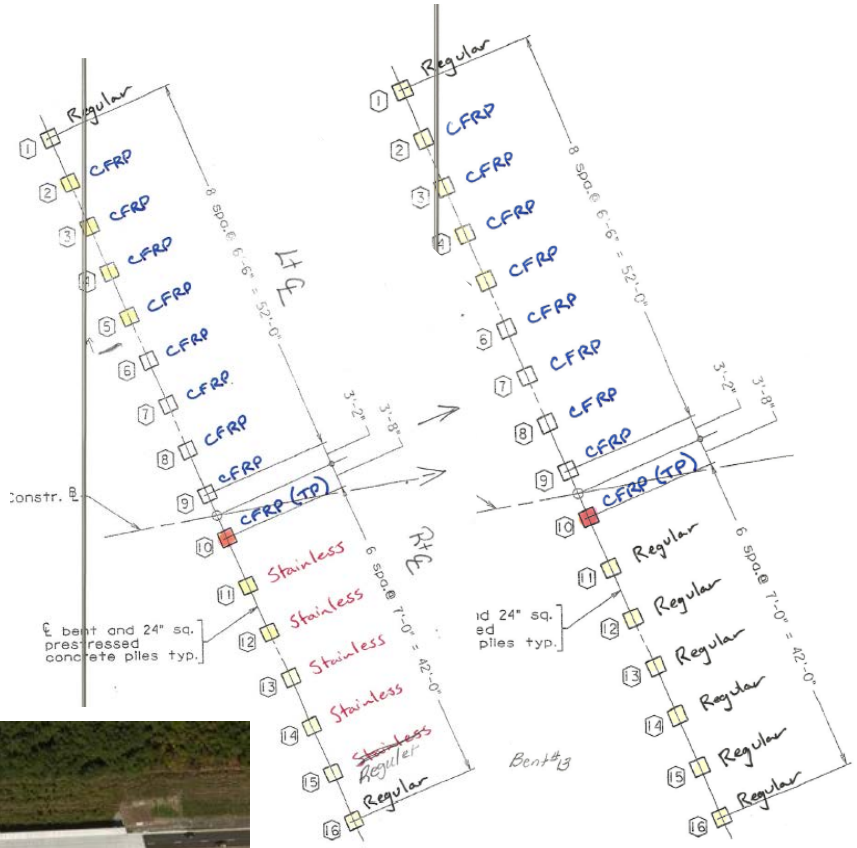

Bent No. 12 Bent No. 13

Halifax Bridge

Route 49 over Aaron's Creek

Halifax Bridge
Route 49 over Aaron's Creek

- 2 span bridge
- 4 beams per span
- 82-ft length beam

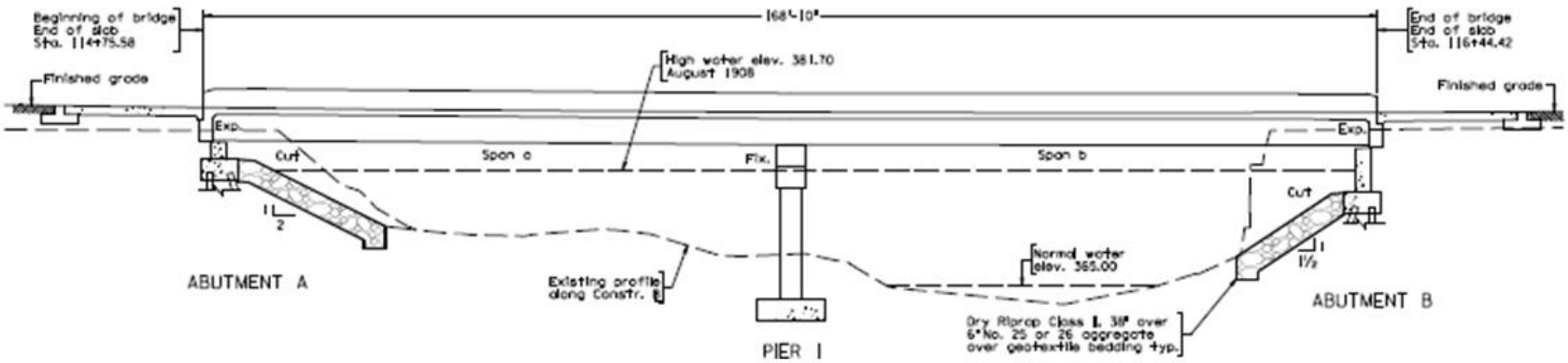

Halifax Bridge – Designed at CO

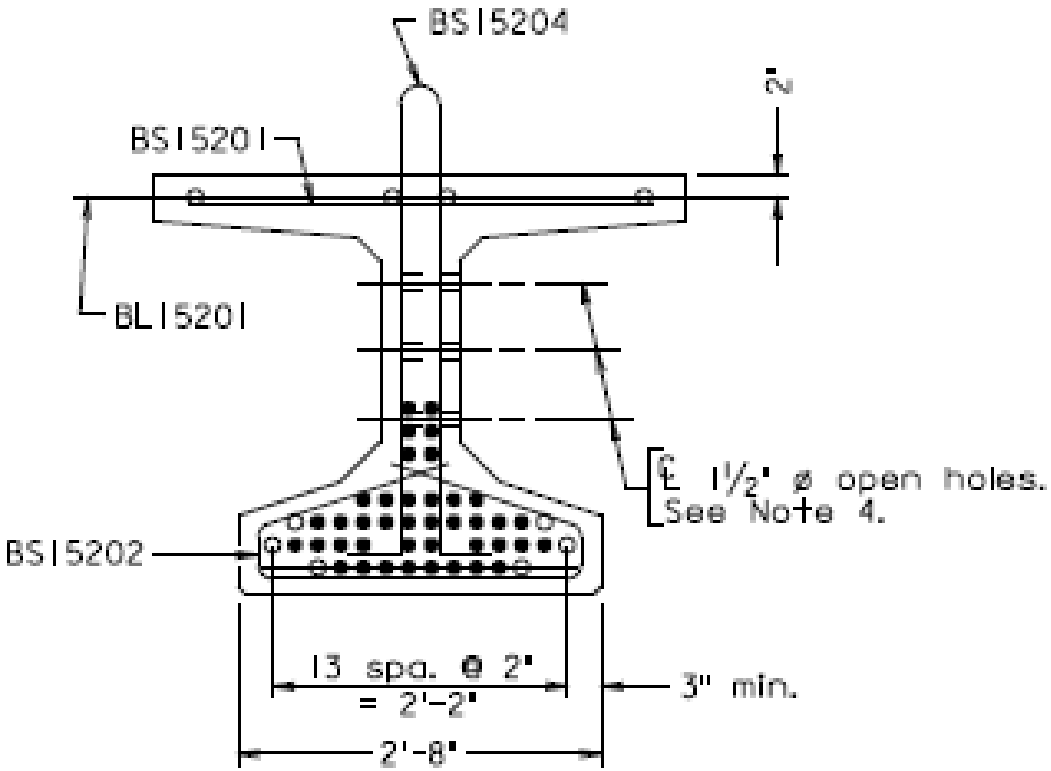

END VIEW

For dimensions not shown, see Typical Beam Section.

● Indicates strand to receive full prestressing

○ Indicates strand to receive 5 kips prestressing

- Each beam is a 45” modified bulb tee girders

Halifax Bridge
CFCC reinforcement

Fabricating 2 beams at a time

CFCC Tensioned and Beam Forms Closed

Concrete Prepared and Tested

Concrete Placed and Finished

Beams are Transported to Site and Erected

Halifax Bridge - CFCC Beams

Route 49 over Aaron's Creek

82-ft long beams

CFCC Parting Thoughts

- Comparison to stainless steel strands
  - Both have high cost per foot.
  - SS more strands due to lower strength
  - Preparing strands for tensioning is slower
  - No Buy America requirement
  - CFCC corrosion free

- After casting, CFCC response similar to conventional or stainless steel reinforced pile

Summary of Current CFCC Challenges

- **Industry**
  - More competitors
  - Improving training and experience
  - Improved availability
  - Use of SCC mixes to reduce need for vibrator
- **Research**
  - Temperature or coupler slippage concern
  - Improvements to end preparation time
  - Maximizing material use to reduce cost
  - Acceptance criteria
- **DOTs**
  - Define where CFCC will be of value to the public

VTRC
Virginia Transportation Research Council

We bring innovation to transportation.

Thank you.

Contact: Celik@VDOT.Virginia.gov
Stephen.Sharp@VDOT.Virginia.gov