# CONCEPTUAL DESIGN REPORT

ROUTE 58 MARTIN LUTHER KING EXTENSION
CITY OF PORTSMOUTH

PROJECT 0058-124-104, PE-101
FOR

Virginia Department of Transportation
VDOT

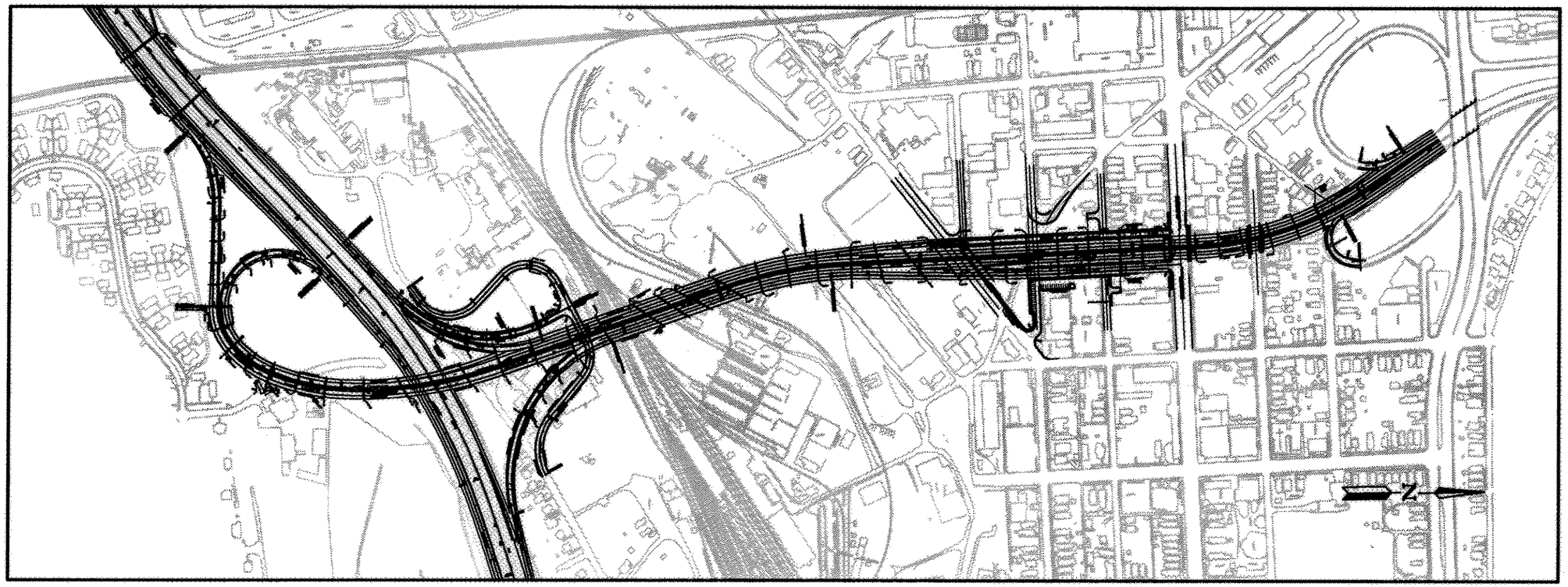

BY

DAVID
VOLKERT
& ASSOCIATES, INC.
5400 SHAWNEE ROAD • ALEXANDRIA, VA 22312

JANUARY 1993

## TABLE OF CONTENTS


| DESCRIPTION | PAGE |
|---|---|
| Executive Summary | 1 |
| Objective of Conceptual Study | 1 |
| Project Description | 2 |
| Preliminary Analysis and Recommendations | 3 |
| Superstructure Alternates | 4 |
| Substructure Alternates | 5 |
| Retaining Walls | 6 |
| Bridge Widenings | 6 |
| General Information | 7 |
| Horizontal and Vertical Clearances | 7 |
| Cost Estimate | 8-11 |
| Design Parameters for Stage I and Stage II Structure Plans | 12,13 |
| Plates | |
| Appendix A | |
| Project Location Map | A-1 |
| Plan Martin Luther King Freeway Sta. 1417+00 to Sta. 1422+00 | A-2 |
| Plan Martin Luther King Freeway Sta. 1422+00 to Sta. 1428+00 | A-3 |
| Plan Martin Luther King Freeway Sta. 1428+00 to Sta. 1435+00 | A-4 |
| Plan Martin Luther King Freeway Sta. 302+10 to Sta. 1001+00 | A-5 |
| Plan Martin Luther King Freeway Sta. 1001+00 to Sta. 1006+00 | A-6 |
| Plan Martin Luther King Freeway Sta. 1006+50 to Sta. 1009+87 | A-7 |
| Plan Martin Luther King Freeway Sta. 1009+87 to Sta. 1014+50 | A-8 |
| Plan Martin Luther King Freeway Sta. 1014+50 to Sta. 1018+00 | A-9 |
| Plan Martin Luther King Freeway Sta. 2029+73 to Sta. 2036+50 | A-10 |
| Plan Martin Luther King Freeway Sta. 1442+00 to Sta. 1448+50 | A-11 |
| Plan Martin Luther King Freeway Sta. 1448+50 to Sta. 1455+00 | A-12 |
| Plan Martin Luther King Freeway Sta. 1455+00 to Sta. 1458+23 | A-13 |
| Plan Martin Luther King Freeway Sta. 1018+00 to Sta. 1025+00 | A-14 |
| Plan Martin Luther King Freeway Sta. 1025+00 to Sta. 1031+50 | A-15 |
| Plan Martin Luther King Freeway Sta. 1031+50 to Sta. 1037+50 | A-15A |
| Plan Martin Luther King Freeway Sta. 1037+50 to Sta. 1044+00 | A-16 |
| Plan Martin Luther King Freeway Sta. 1044+00 to Sta. 1050+50 | A-17 |
| Typical Cross Section Alternate 1 (Sheet 1,2,3) | A-18,19,20 |
| Typical Cross Section Alternate 2 (Sheet 4) | A-21 |
| Typical Cross Section Alternate 3 (Sheet 5,6) | A-22,23 |
| Typical Cross Section Alternate 4 (Sheet 7) | A-24 |
| Typical Pier Details Alternate 1 (Sheet 8,9) | A-25,26 |
| Typical Pier Details Alternate 2 (Sheet 10) | A-27 |
| Typical Pier Details Alternate 3 (Sheet 11,12) | A-28,29 |
| Typical Pier Details Alternate 4 (Sheet 13) | A-30 |
| Typical Pier Details Alternate 5 (Sheet 14,15) | A-31,32 |
| Typical Ramp and Mainline Abutments (Sheet 16) | A-33 |
| Typical Pier Alternate 5 - Rustication Finish (Sheet 17) | A-34 |
| Typical Pier Alternate 5 - Rough Finish (Sheet 18) | A-35 |
| Appendix B | |
| Preliminary Geotechnical Report | B-1 to B-28 |
| Appendix C | |
| Project Location Plan Scale: 1" = 100' | |

**Project Description**

The Virginia Department of Transportation (VDOT) proposes to extend the Martin Luther King Freeway (MLK) from London Boulevard to Interstate 264 (I-264) in the city of Portsmouth, Virginia. Also included will be the widening of I-264 approximately from Frederick Boulevard to Des Moines Avenue to provide collector-distributor type of ramps.

The MLK Freeway will start on grade at London Boulevard, on the north end of the project, and will gradually rise in grade as it proceeds south providing a 14'-6" vertical clearance over Queen Street. The grade will continue to increase cresting over the railroads where a 23'-0" vertical clearance will be provided. The grade will start to descent once it passes over the railroad and will provide a vertical clearance of 16'-6" over I-264, from this point the grade will continue to descend as it will eventually match I-264. MLK southbound will have exit ramp SW going to I-264 westbound and ramp SE going to I-264 eastbound. MLK northbound will have access ramps NE from I-264 eastbound and ramp WN from I-264 westbound. There will also be a two lane exit ramp N from MLK northbound to High Street and an access ramp S from High Street to MLK Southbound. The MLK Freeway is a viaduct of approximately 5,000 feet long with ramp bridges at the interchanges of High Street and I-264.

Interstate 264 is a limited access facility which serves the Downtown tunnel. It is an east-west six lane roadway with the directional lanes being separated by a concrete barrier. I-264 will be widened on the outside to accommodate CD lanes and will require the widening of the EB and WB Bridge over the Norfolk and Portsmouth Railroad and the widening of the bridge EB over Des Moines Avenue.

Ramp EN (See page A-5)

This on ramp structure to MLK northbound from EB I-264 is on a slight curved alignment. The proposed typical bridge section consists of a 16'-0" lane, a 6'-0" shoulder, an 8'-0" shoulder and two 1'-8" parapets. The total out-to-out structure width is 33'-4". The approximate length of the ramp structure is 500 feet.

Ramp SE (See page A-5)

This exit ramp structure from MLK southbound to EB I-264 is on a sharp horizontal alignment. The proposed typical bridge section consist of an 18'-0" lane, a 6'-0" left shoulder, an 8'-0" right shoulder and two 1'-8" parapets. The total out-to-out structure width is 35'-4". This structure has been widened by 2 feet due to the curvature of the ramp. The approximate length of the ramp structure is 375 feet.

Ramp WN (See page A-8, A-9, A-11)

This on ramp structure to MLK northbound from WB I-264 is on a curved alignment. The proposed typical bridge section consist of a 16'-0" lane, a 6'-0" left shoulder, an 8'-0" right shoulder and two 1'-8" parapets. The total out-to-out structure width is 33'-4". The approximate length of the ramp structure is 585 feet.

Ramp SW (See page A-8)

This exit ramp structure to WB I-264 from MLK southbound is on a slight curved alignment. The proposed typical bridge section consist of a 16'-0" lane, a 6'-0" left shoulder, an 8'-0" right shoulder and two 1'-8" parapets. The total out-to-out structure width is 33'-4". The approximate length of the ramp structure is 200 feet.

Ramp W (See page A-8)

This is a curved access ramp provided from Columbus Street to WB I-264. The structure on this ramp has a typical section of 16'-0" lane, a 6'-0" left shoulder, an 8'-0" right shoulder and two 1'-8" parapets. The total out-to-out structure width is 33'-4". The approximate length of the ramp structure is 250 feet.

Ramp N (See page A-15, A-15A)

This tangent exit ramp from MLK northbound to High Street consist of 2-12'0" lanes, a 6'-0" left shoulder, a 12'-0" right shoulder and two 1'-8" parapets. The total out-to-out structure width is 45'-4". The approximate length of the ramp structure is 520 feet.

Ramp S (See page A-15, A-15A)

This tangent access ramp from High Street to MLK southbound consist of one 16'-0" lane, a 6'-0" left shoulder, an 8'-0" right shoulder and two 1'-8" parapets. The total out-to-out structure width is 33'-4". The approximate length of the ramp structure is 500 feet.

MLK Mainline (See page A-5, A-6, A-7, A-8, A-9, A-14, A-15, A-15A, A-16, A-17)

MLK northbound from station 1000+00 to station 1016+00, consists of curved alignment with one 16'-0" lane, a 6'-0" left shoulder, a right 12'-0" shoulder, a 1'-3" median parapet and an 1'-8" outside parapet. The total out-to-out structure width is 36'-11".

From station 1016+00 to station 1026+00 the alignment consists of a combination of tangent sections along with curved alignment. The number of lanes increase in this segment from one to three. The typical section consists of three 12'-0" lanes, a 6'-0" shoulder, a 12'-0" shoulder, a 1'-3" median parapet and a 1'-8" outside parapet. The total out-to-out structure width is 56'-11".

From station 1026+00 to station 1045+00 the alignment varies from tangent sections to curved sections. The number of lanes are reduced in this section from three to two. The typical section will consist of two 12'-0" lanes, a 6'-0" left shoulder, a 12'-0" right shoulder, a 1'-3" median parapet, and an 1'-8" outside parapet. The total out-to-out structure width is 44'-11".

MLK southbound from station 1000+00 to station 1010+00 consists of curved alignment with one 16'-0" lane, a 6'-0" shoulder, a 12'-0" shoulder, a 1'-3" median parapet and an 1'-8" outside parapet. The total out-to-out structure width is 36'-11".

From station 1010+00 to station 1026+00 the alignment consists of a combination of tangent sections along with curved alignment. The number of lanes increases in this segment from one to three. The typical section consist of three 12'-0" lanes, a 6'-0" shoulder, a 12'-0" shoulder, a 1'-3" median parapet and an 1'-8" outside parapet. The total out-to-out structure width is 56'-11".

From station 1026+00 to station 1045+00 the alignment varies from tangent sections to curved sections. The number of lanes are reduced in this section from three to two. The typical section will consist of two 12'-0" lanes, a 6'-0" shoulder, a 12'-0" shoulder, a 1'-3" median parapet, and an 1'-8" outside parapet. The total out-to-out structure width is 44'-11".

At the median parapet there will be a separation of 3" between the backs of the parapets.

**Preliminary Analysis and Recommendations**

An analysis was made to assess whether it was technically feasible to support portions of the proposed highway alignment on an earth embankment. The initial study included slope stability and settlement analyses using the recent subsurface information and laboratory testing results.

The following results were derived from the analyses.

1. Slope Stability Analyses

   - The 2H:1V side slopes of the proposed embankment are essentially stable.

2. Settlement Analyses

   - Approximately 19 inches of settlement between station 1031+00 and station 1045+00 and approximately 38 inches between station 1000+00 and station 1031+00 will occur in the embankments due to its loading on the subsurface soils.

   - The settlement could extend out a distance of 160 feet from the embankment centerline.

   - Pile supported reinforced concrete retaining walls and embankments supported by reinforced earth will have similar implications on properties and utilities adjacent to the proposed extension alignment due to the resulting settlement trough.

   - Sand drains in combination with soil pre-loading can be used to accelerate the settlements and reduce associated post-construction settlements.

   - The magnitude of the settlements can be reduced by using lightweight fill and/or constructing the embankment in stages.

3. Estimate Pile Lengths

   - The existing projects in the area use 12" hexagonal precast prestressed concrete piles and based on this and the soil condition, it was determined that the foundation should rest on precast prestressed concrete piles. The approximate pile length for the elevated structure is 55 feet and an embankment is 65 feet.

4. Recommendations

   - It is recommended that the proposed highway extension be supported on elevated structure. The abutments and piers for the overpass should be supported on a pile foundation.

   - The magnitude of the estimated settlements and the potential influence of the settlement on existing utilities and buildings beyond the right-of-way of the proposed highway preclude the use of earth embankment at the site.

**Superstructure Alternates**

Four different design schemes were investigated for the bridge superstructure. Various girder types, spacing, span lengths, constructability, ease of inspection and future rehabilitation were considered. Detailed cost estimates covering only the major bridge superstructure items have been prepared for each alternate. The estimates provide a good comparative cost for each scheme, however they do not reflect the total cost of the project. A description of each alternative is as follows:

Alternative 1 (See page A-18, A-19, A-20)

- Continuous Composite Steel Plate Girder
- Span lengths vary from 80 to 190 feet however, the majority of spans range from 90 to 120 feet.
- 8.5 inch concrete deck slab.
- On Ramps S, EN, SE, WN, SW, W, Mainline northbound station 1000+00 to station 1016+00 and southbound station 1000+00 to station 1010+00, there are 4 lines of girders.
- On Mainline northbound station 1016+00 to station 1026+00 and southbound station 1010+00 to 1026+00, there are 7 lines of girders.
- On Mainline station 1026+00 to station 1045+00 and Ramp N, there are 5 lines of girders.
- Girders to be curved in curved portion of bridge.

Alternative 2 (See page A-18, A-19, A-20, A-21)

- Continuous Composite Steel Plate Girder and Prestressed Concrete Girders.
- Span lengths for the steel girder vary from 90 to 190 feet.
- Span lengths for AASHTO Type V girders 110 feet.
- AASHTO Type V girders will be used at the following locations:
  - Ramp EN Station 301+99 to Station 307+00
  - Ramp S Station 1032+26 to Station 1037+16
  - Ramp N Station 1032+76 to Station 1037+16
  - Mainline Station 1032+26 to Station 1045+00
- Steel plate girders will be used at the following locations:
  - Ramp SE, WN, SW, W
  - Mainline Station 1000+00 to Station 1032+26
- 8.5 inch concrete deck slab.
- On Ramp S there are 5 lines of concrete girders.
- On Ramp N and mainline Station 1032+26 to Station 1045+00, there are 6 lines of concrete girders.
- The lines of steel girders are the same as Alternate 1.
- Steel Girders to be curved in curved portion of bridge.
- Prestressed concrete girders made continuous for super imposed dead load and live load.

Alternative 3 (See page A-22, A-23)

- Continuous composite steel plate box girder.
- Span lengths vary from 80 to 190 feet. However, the majority of spans range from 90 to 120 feet.
- 8.5 concrete deck slab.
- On Ramps S, EN, SE, WN, SW, W, mainline northbound Station 1000+00 to Station 1016+00 and southbound Station 1000+00 to Station 1010+00, there are 2 lines of box girders.
- On mainline northbound station 1016+00 to Station 1045+00 and southbound Station 1010+00 to Station 1045+00 and Ramp N, there are 3 lines of box girders.
- Box girders to be curved in curved section of bridge.

Alternative 4 (See page A-24)

- Precast/post-tensioned concrete segmental box girder.
- Span lengths approximately 150 feet.
- On Ramps S, EN, SE, WN, SW, W, mainline northbound Station 1000+00 to Station 1016+00 and southbound station 1000+00 to station 1010+00, there is one line of a concrete box girder.
- On mainline northbound Station 1016+00 to Station 1045+00 and southbound Station 1010+00 to Station 1045+00 and Ramp N, there are 2 lines of concrete box girders.
- Concrete box girders to be curved in curved section of bridge.

**SUPERSTRUCTURE ALTERNATE SELECTION MATRIX**

| ITEM | ALTERNATE 1 | 2 | 3 | 4 |
|---|---|---|---|---|
| Cost | $27,415,400 | $26,558,100 | $31,281,408 | $40,653,000 |
| Aesthetics | 4 | 2 | 5 | 5 |
| Maintenance | 4 | 4 | 3 | 3 |
| Durability | 5 | 5 | 3 | 4 |
| Ease of Construction | 5 | 4 | 3 | 2 |
| Inspection Access | 5 | 4 | 3 | 3 |
| Future Deck Replacement | 5 | 4 | 3 | 1 |
| Future Structure Widening | 5 | 4 | 3 | 1 |

5 - Excellent
4 - Good
3 - Satisfactory
2 - Fair
1 - Poor

Alternate 1 - Steel Girders
Alternate 2 - Steel Girders and AASHTO Beam
Alternate 3 - Steel Box Girders
Alternate 4 - Concrete Segmental Box Girder

**Substructure Alternates**

Five different design schemes were investigated for the bridge substructure. The various pier configurations were studied taking into consideration column spacing, constructability, ease of inspection, future rehabilitation and aesthetics. Detailed cost estimates covering only the major bridge substructure items have been prepared for each alternate. The estimates provide a good comparative cost for each scheme. However, they do not reflect the total cost of the project. A description of each alternate is as follows:

Alternative 1 (See page A-25, A-26)

- Round column pier with a constant depth cap.
- Overhangs of the pier cap are sloped.
- Ramps S, N, EN, SE, WN, SW, W, mainline northbound Station 1000+00 to Station 1016+00, Station 1026+00 to Station 1045+00, and mainline southbound Station 1000+00 to station 1010+00, Station 1026+00 to Station 1045+00 have two column pier units.
- Mainline northbound Station 1016+00 to Station 1026+00 and mainline southbound Station 1010+00 to Station 1026+00 have three column pier units.

Alternative 2 (See page A-27)

- Rectangular column pier with a constant depth cap combined with hammerhead piers with a rectangular stem.
- Overhang of the pier cap are sloped.
- Ramps S, N, EN, SE, WN, SW, W, mainline northbound Station 1000+00 to Station 1016+00 and mainline southbound Station 1000+00 to Station 1010+00 are hammerhead piers.
- Mainline northbound and southbound Station 1026+00 to Station 1045+00 have two column pier units.
- Mainline northbound Station 1016+00 to 1026+00 and mainline southbound Station 1010+00 to Station 1026+00 have three column pier units.

Alternative 3 (See page A-28, A-29)

- Rectangular column pier with a variable depth cap.
- Overhangs and interior bottom of the pier cap are sloped.
- Ramps S, N, EN, SE, WN, SW, W, mainline northbound Station 1000+00 to Station 1016+00, Station 1026+00 to Station 1045+00, and mainline southbound Station 1000+00 to Station 1010+00, Station 1026+00 to Station 1045+00 have two column pier units.
- Mainline northbound Station 1016+00 to 1026+00 and mainline southbound Station 1010+00 to 1026+00 have three column pier units.

Alternative 4 (See page A-30)

- Rectangular column pier with a variable depth cap combined with Hammerhead piers with a rectangular stem.
- Overhangs and interior of the pier cap are sloped.
- Ramps S, N, EN, SE, WN, SW, W, mainline northbound Station 1000+00 to Station 1016+00 and mainline southbound Station 1000+00 to Station 1010+00 are hammerhead piers.
- Mainline northbound and southbound Station 1026+00 to Station 1045+00 have two column pier units.
- Mainline northbound Station 1016+00 to 1026+00 and mainline southbound Station 1010+00 to Station 1026+00 have three column pier units.

Alternative 5 (See page A-31, A-32)

- Hammerhead piers at all locations. The stem for the piers will be rectangular.

Abutments (See page A-33)

The abutments will be reinforced concrete with U-back wingwalls. The abutment height has been maintained at 14'-6" from top of backwall to bottom of footing except at Station 1045+00 on mainline. At this location due to Ramp A entering MLK northbound a semi-cantilever abutment is being proposed with long wingwalls. The abutment at this location for the northbound and southbound bridges will be adjacent to each other, separated by a one inch expansion joint.

Foundations

A preliminary subsurface investigation has been performed for this project. Based on this investigation it is anticipated that the footings will be supported on precast prestressed concrete piles. During the preliminary analysis 12" piles were analyzed with a design load of 42 tons and determined an approximate length of pile of 55 feet. Also investigated was the use of 24" square precast prestressed concrete piles with a design load of 84 tons.

For final design, additional subsurface information will be obtained and an actual determination of which size piles to be used at specific locations will be determined.

SUBSTRUCTURE ALTERNATE SELECTION MATRIX

| ITEM | ALTERNATE 1 | 2 | 3 | 4 | 5 |
|---|---|---|---|---|---|
| Cost | $8,883,000 | $8,298,000 | $9,194,000 | $8,598,000 | $8,280,000 |
| Aesthetics | 3 | 2 | 3 | 3 | 5 |
| Maintenance | 4 | 4 | 3 | 3 | 4 |
| Durability | 5 | 5 | 4 | 4 | 5 |
| Ease of Construction | 4 | 4 | 3 | 3 | 5 |
| Inspection Access | 5 | 4 | 4 | 4 | 5 |
| Future Deck Replacement | 4 | 3 | 3 | 3 | 3 |
| Future Structure Widening | 4 | 4 | 4 | 4 | 4 |

5 - Excellent
4 - Good
3 - Satisfactory
2 - Fair
1 - Poor

Alternate 1 - Constant depth cap, round columns
Alternate 2 - Constant depth cap, Square columns, Hammerhead ramp piers
Alternate 3 - Variable depth cap, Square columns
Alternate 4 - Variable depth cap, Square columns, Hammerhead ramp piers
Alternate 5 - All Hammerhead piers

**Retaining Walls**

There are seven retaining walls located on the project. The first retaining wall starts at station 1421+00 on WB I-264. The wall is necessary due to the bridge widening and maintains the fill from going into the railroad tracks. The wall has an approximate length of 100 feet.

The second retaining wall starts at station 1424+00 on EB I-264. This wall is necessary due to the bridge widening and maintains the fill within the right-of-way. The wall has an approximate length of 90 feet.

The third retaining wall starts at station 2029+80 on EB I-264. This wall is necessary to maintain the fill within the right-of-way. The wall has an approximate length of 50 feet.

The fourth retaining wall starts at station 407+15 on Ramp WN. This wall is necessary to maintain the fill from the adjoining properties and maintaining the fill within the right-of-way. The wall has an approximate length of 60 feet.

The fifth retaining wall starts at station 705+00 on Ramp W. This wall is necessary in order to maintain the fill from going into Columbus Street. The wall has an approximate length of 200 feet.

The sixth retaining wall starts at Station 1099+30 on Ramp A. This wall is necessary in order to maintain the fill from going into Liverpool Street and the adjoining properties. The wall has an approximate length of 150 feet.

The seventh retaining wall starts at Station 1045+00 on MLK southbound. This wall is necessary to maintain the right-of-way as close as possible to MLK. The wall has an approximate length of 100 feet.

The retaining walls will be designed as cast in place concrete cantilever walls with pile foundations. From the preliminary soils report it was determined that the anticipated settlement would require the foundation to be supported on piles.

Other types of wall systems such as reinforced earth and double wall can be placed without the need of piles. However, due to the settlement that will occur, this system will require the use of lightweight fill and/or construct the fill in stages.

**Bridge Widenings**

I-264 EB and WB over Norfolk and Portsmouth Railroad (See page A-2, A-3)

There are two bridge widenings on I-264. The first widening occurs on both EB and WB I-264 over the Norfolk and Portsmouth Railroad at approximate Station 1421+00. The widening on the WBL is approximately 19 feet and on the EBL is approximately 37 feet. The superstructure will be widened using steel beams and a concrete deck, since the existing bridge superstructure consists of multi steel beam construction. The abutments and piers will be widened with similar reinforced concrete structures as the existing.

I-264 EB over Des Moines Avenue (See page A-13)

The second bridge widening occurs on EB I-264 over Des Moines Avenue at approximate Station 1457+00. The widening on the EBL is approximately 11 feet. The superstructure will be widened using steel beams and a concrete deck, since the existing bridge superstructure consists of multi steel beam construction. The abutments and piers will be widened with similar reinforced concrete structures as the existing.

Both bridge widenings will require pile foundations based on review of the existing plans.

## General Information

Deck Drainage

The closed deck drainage system will consist of scuppers on the bridge deck from which the stormwater will be piped to various retention ponds. The stormwater pipes will be suspended from the superstructure and will be brought down to grade alongside the piers and abutments.

Utilities

Provisions will be made for the support of utilities, lighting and signing on the bridge superstructure.

Based on existing information, an effort has been made to avoid existing utilities. The pier locations are approximate and if certain utilities are identified in the field to be unfeasible for relocation, the span lengths may be modified to avoid any conflicts.

Pier Locations on Railroad Property

The span configuration has been developed based on the aerial survey along the existing railroad yard. The span configuration in this area may be modified when information is received on track closures and/or abandonment. Presently the required horizontal clearance has been maintained from all the tracks shown, thus requiring some long span configurations. On the MLK southbound at approximate Station 1018+50, a steel bent is being proposed to provide the adequate horizontal and vertical clearance. However, adjacent to this location is a track that looks abandoned. Therefore further investigation on the need for a steel bent pier will be performed during Stage I, when more information is available from the railroad.

Inspection Access

Adequate access will be provided for maintenance and inspection of the completed structure throughout the design phase.

Architectural Considerations

The Superstructure Steel will be painted using the standard VDOT paint system. The Jersey parapets will be painted white with an epoxy protective coating.

The plain hammerhead piers are aesthetically pleasing without any architectural treatment, however the substructure units can be enhanced by adding rustication finish or a rough finish to the face of the units. Both of these finishes will not only enhance the units but will also provide an anti graffiti deterrent since the surfaces will not be smooth. (See page A-34, A-35)

DV&A recommends using plain hammerhead piers and only applying an anti graffiti coating at areas that will be visible to the public.

## Horizontal and Vertical Clearances

### Vertical Clearance

Following are the critical vertical clearances for the project:

| Clearance Location | Baseline Data | | Vertical Clearance | |
|---|---|---|---|---|
| | Sta | Offset | Actual | Required |
| MLK SB @ CD Road, RTP EOP | 1008+90 | 36.00 L | 21.07 | 16.50 |
| MLK SB @ I-264, LT EOP | 1010+17 | 41.00 L | 17.42 | 16.50 |
| Ramp WN @ Columbus Rd | 413+48 | 10.67 R | 20.03 | 16.50 |
| MLK SB @ Columbus Rd | 1015+92 | 54.00 L | 21.88 | 16.50 |
| Ramp WN @ Railroad | 414+00 | 10.67 R | 23.56 | 23.00 |
| MLK SB @ Railroad | 1016+45 | 54.00 L | 24.20 | 23.00 |
| MLK NB @ Railroad | 1017+11 | 54.00 R | 23.00 | 23.00 |
| MLK SB @ Railroad | 1016+90 | 54.00 L | 23.95 | 23.00 |
| MLK SB @ Railroad | 1021+04 | 54.00 L | 28.79 | 23.00 |
| MLK NB @ Railroad | 1021+96 | 54.00 R | 25.78 | 23.00 |
| MLK NB @ Trego Stone Co. | 1025+45 | 54.00 R | 24.49 | 16.50 |
| Ramp S @ Turnpike Rd | 508+27 | 6.67 R | 19.41 | 14.50 |
| Ramp N @ Turnpike Rd | 605+85 | 22.67 R | 20.04 | 14.50 |
| MLK SB @ High St | 1039+46 | 40.00 L | 23.42 | 14.50 |
| MLK SB @ Queen St | 1042+48 | 40.00 L | 17.28 | 14.50 |
| MLK SB @ London Blvd. | 1051+10 | 2.0 L | *15.75 | 15.75 |
| MLK SB @ London Blvd. | 1051+10 | 2.0 R | *15.67 | 15.67 |
| I-264 @ Railroad | 1423+07 | 67.00 L | *22.86 | 23.00 |
| I-264 @ Des Moines Ave | 2045+20 | 1067 R | 14.56 | 14.50 |

* Matches existing clearance

**Horizontal Clearance**

Following Are the critical horizontal clearances for the project:

| Clearance Location | Horizontal Clearance | |
|---|---|---|
| | Actual | Required |
| I-264 EB, under MLK | 38.00 | 33.00 |
| I-264 WB, under MLK | 76.00 | 33.00 |
| Columbus Rd under MLK | 30.00 | 6.00 |
| RR @ Sta 1017+00, MLK | 18.00 | 18.00 |
| RR @ Sta 1018+00, MLK | 18.00 | 18.00 |
| RR @ Sta 1018+40, MLK | 18.00 | 18.00 |
| RR @ Sta 1019+50, MLK | 27.00 | 18.00 |
| RR @ Sta 1020+20, MLK | 20.00 | 18.00 |
| RR @ Sta 1021+15, MLK | 18.00 | 18.00 |
| RR @ Sta 1022+00, MLK | 18.00 | 18.00 |
| Turnpike Rd under MLK, north * | 27.00 | 6.00 |
| Turnpike Rd under MLK, south * | 27.00 | 6.00 |
| High St under MLK, north | 28.00 | 6.00 |
| High St under MLK, south | 28.00 | 6.00 |
| Queen St under MLK, north | 27.00 | 6.00 |
| Queen St under MLK, south | 27.00 | 6.00 |

*Min horiz opening required = 80'-0", VDOT letter, 3/31/92
Opening provided = 100'-0"

**Cost Estimate**

The following cost estimates cover the major bridge items for each alternative. The estimates provide a good comparative cost for each alternative, however, they do not reflect the total cost of the project.

The cost estimates for the superstructure were developed for a 40 year life cycle. The 40 year life cycle was selected based on the first U.S. prestressed girder bridge built in 1950 and replaced in 1990. The life cycle cost included the cost of painting the steel bridge one time during those 40 years. A true life cycle cost comparison between different alternates is extremely difficult to prepare at this time since the information needed to make such a study is not available. Therefore, the cost we have prepared is limited by the amount of existing information that is available.

From the developed superstructure cost estimates alternate 2 is 3% less expensive than alternate 1. The cost also indicates that alternate 3 is 13% more expensive and alternate 4 is 53% more expensive.

The substructure cost were developed using the all steel superstructure to develop the loads on the piers and determine the quantity of piles required for each alternate. The cost of the abutments were not included in the estimate since they would be the same for all the alternates. From the substructure cost estimates alternates 1, 2, 4 and 5 basically have the same cost, and alternate 3 is 11% more expensive.

An additional substructure cost estimate was developed using the combination steel and concrete superstructure since the additional weight introduced by the concrete beams, would require additional piles in the foundation. The additional cost for the substructure is approximately 2.5% higher.

Finally, the superstructure and substructure cost were combined to get a total cost of the structure. In the substructure cost both the least expensive and the recommended cost are shown. The total cost includes the recommended substructure cost. From these cost it is apparent that Alternate 1 and 2 are practically the same with a 2 % difference in cost.

## Superstructure and Substructure Construction Cost Comparison (40-Year Lifecycle)

| Alt. No. | Superstructure Alternate | Superstructure Cost | Substructure Least Cost | Substructure Recommended | Total Cost | Cost Difference | Cost Index |
|---|---|---|---|---|---|---|---|
| 1 | Steel Girders | 27,415,403 | (5) 8,280,441 | (5) 8,280,441 | $35,695,844 | $568,493 | 1.02 |
| 2 | Steel & Concrete | 26,558,112 | (2) 8,542,216 | (5) 8,569,238 | $35,127,351 | $0 | 1.00 |
| 3 | Steel Box | 31,281,408 | * 9,384,422 | * 9,384,422 | $40,665,831 | $5,538,480 | 1.16 |
| 4 | Concrete Box | 40,653,601 | (5) 8,280,441 | (5) 8,280,441 | $48,934,042 | $13,806,691 | 1.39 |

( ) Indicates the substructure alternate

* Based on 0.3 ratio of substructure cost to superstructure cost for this alternate

## Superstructure Construction Cost Comparison (40-Year Lifecycle)

Alternate 1: Steel Plate Girders

| Structural Item | Quantity | Unit | Unit Cost | Total Cost |
|---|---|---|---|---|
| Bridge Deck Concrete | 14,059 | CY | $430 | $6,049,261 |
| Epoxy Coated Reinforcement | 3,092,957 | lbs | $0.56 | $1,732,056 |
| Steel Plate Girders, Tangent | 8,655,152 | lbs | $0.96 | $8,308,946 |
| Steel Plate Girders, Curved | 9,699,436 | lbs | $1.06 | $10,281,402 |
| Concrete Parapet | 23,112 | LF | $45.16 | $1,043,738 |
| Total Cost | | | | $27,415,403 |

Alternate 2: Steel & Precast Concrete Girders

| Structural Item | Quantity | Unit | Unit Cost | Total Cost |
|---|---|---|---|---|
| Bridge Deck Concrete | 14,059 | CY | $430 | $6,049,261 |
| Epoxy Coated Reinforcement | 3,147,737 | lbs | $0.56 | $1,762,733 |
| Steel Plate Girders | 13,747,500 | lbs | $1.06 | $14,572,350 |
| Precast AASHTO I-Beams, Type V | 22,583 | LF | $120 | $2,709,960 |
| CIP Concrete Diaphragms | 249 | CY | $430 | $107,070 |
| Concrete Beam Delivery | 226 | ea | $800 | $180,664 |
| Concrete Beam Erection | 226 | ea | $586 | $132,336 |
| Concrete Parapet | 23,112 | LF | $45.16 | $1,043,738 |
| Total Cost | | | | $26,558,112 |

Alternate 3: Steel Box Girders

| Structural Item | Quantity | Unit | Unit Cost | Total Cost |
|---|---|---|---|---|
| Bridge Deck Concrete | 14,059 | CY | $430 | $6,049,261 |
| Epoxy Coated Reinforcement | 3,092,957 | lbs | $0.56 | $1,732,056 |
| Steel Plate Girders, Tangent | 8,171,666 | lbs | $1.23 | $10,051,149 |
| Steel Plate Girders, Curved | 9,327,221 | lbs | $1.33 | $12,405,204 |
| Concrete Parapet | 23,112 | LF | $45.16 | $1,043,738 |
| Total Cost | | | | $31,281,408 |

Alternate 4: Segmental Concrete Box Beam

| Structural Item | Quantity | Unit | Unit Cost | Total Cost |
|---|---|---|---|---|
| Concrete, Class A5 | 28,764 | CY | $1,050 | $30,202,200 |
| Epoxy Coated Reinforcement | 4,118,980 | lbs | $0.56 | $2,306,629 |
| Prestressing Strands | 2,028,867 | lbs | $3.50 | $7,101,035 |
| Concrete Parapet | 23,112 | LF | $45.16 | $1,043,738 |
| Total Cost | | | | $40,653,601 |

Superstructure Construction Cost Comparison

| Alternate | Cost | Difference | Cost Index |
|---|---|---|---|
| 1 | $27,415,403 | $857,291 | 1.03 |
| 2 | $26,558,112 | $0 | 1.00 |
| 3 | $31,281,408 | $4,723,296 | 1.18 |
| 4 | $40,653,601 | $14,095,489 | 1.53 |

Substructure Construction Cost Comparison
Steel Superstructure
Alternate 1

| Alternate 1: Constant-depth cap, round columns | | | | | | |
|---|---|---|---|---|---|---|
| Structural Item | Unit Cost | Units | MLK Mainline Ramps | MLK Mainline 3-lane | MLK Mainline 2-lane | Subtotal Cost |
| Concrete cap & col | $438.00 | CY | 495 | 1,422 | 1,797 | 1,626,732 |
| Concrete footing | $364.00 | CY | 540 | 1,237 | 1,528 | 1,203,020 |
| Reinforcing | $0.46 | lbs | 127,718 | 338,704 | 425,043 | 410,074 |
| Structural Excavation | $20.22 | CY | 1,457 | 3,339 | 4,088 | 179,634 |
| 12" Piles | $22.57 | LF | | 76,310 | | 1,722,317 |
| 24" Piles | $39.67 | LF | | 93,015 | | 3,689,905 |
| Total Cost | | | | | | $8,831,682 |

| Alternate 2: Constant-depth cap, rectangular columns, hammerhead ramp piers | | | | | | |
|---|---|---|---|---|---|---|
| Structural Item | Unit Cost | Units | MLK Mainline Ramps | MLK Mainline 3-lane | MLK Mainline 2-lane | Subtotal Cost |
| Concrete cap & col | $438.00 | CY | 0 | 1,355 | 830 | 957,030 |
| Concrete footing | $364.00 | CY | 0 | 1,049 | 647 | 617,344 |
| Concrete Hammerhead | $296.00 | CY | 555 | 0 | 1,220 | 525,400 |
| Hammerhead Footing | $304.00 | CY | 378 | 0 | 763 | 346,864 |
| Reinforcing | $0.46 | lbs | 129,963 | 311,167 | 447,660 | 408,843 |
| Structural Excavation | $20.22 | CY | 952 | 2,831 | 3,610 | 149,486 |
| 12" Piles | $22.57 | LF | | 20,865 | | 470,923 |
| 24" Piles | $39.67 | LF | | 121,550 | | 4,821,889 |
| Total Cost | | | | | | $8,297,779 |

| Alternate 3: Variable-depth cap, rectangular columns | | | | | | |
|---|---|---|---|---|---|---|
| Structural Item | Unit Cost | Units | MLK Mainline Ramps | MLK Mainline 3-lane | MLK Mainline 2-lane | Subtotal Cost |
| Concrete cap & col | $451.00 | CY | 538 | 1,715 | 1,768 | 1,813,471 |
| Concrete footing | $364.00 | CY | 548 | 1,481 | 1,530 | 1,295,476 |
| Reinforcing | $0.46 | lbs | 135,374 | 407,801 | 420,578 | 443,326 |
| Structural Excavation | $20.22 | CY | 1,473 | 3,928 | 4,094 | 191,989 |
| 12" Piles | $22.57 | LF | | 81,965 | | 1,849,950 |
| 24" Piles | $39.67 | LF | | 90,740 | | 3,599,656 |
| Total Cost | | | | | | $9,193,868 |

Substructure Construction Cost Comparison
Steel Superstructure
Alternate 1

| Alternate 4: Variable-depth cap, rectangular columns, hammerhead ramp piers | | | | | | |
|---|---|---|---|---|---|---|
| Structural Item | Unit Cost | Units | MLK Mainline Ramps | MLK Mainline 3-lane | MLK Mainline 2-lane | Subtotal Cost |
| Concrete cap & col | $451.00 | CY | 0 | 1,636 | 763 | 1,081,949 |
| Concrete footing | $364.00 | CY | 0 | 1,349 | 645 | 725,816 |
| Concrete Hammerhead | $296.00 | CY | 546 | 0 | 1,216 | 521,552 |
| Hammerhead Footing | $304.00 | CY | 378 | 0 | 752 | 343,520 |
| Reinforcing | $0.46 | lbs | 129,085 | 383,202 | 434,689 | 435,609 |
| Structural Excavation | $20.22 | CY | 952 | 3,578 | 3,577 | 163,924 |
| 12" Piles | $22.57 | LF | | 29,055 | | 655,771 |
| 24" Piles | $39.67 | LF | | 117,715 | | 4,669,754 |
| Total Cost | | | | | | $8,597,895 |

| Alternate 5: All hammerhead piers | | | | | | |
|---|---|---|---|---|---|---|
| Structural Item | Unit Cost | Units | MLK Mainline Ramps | MLK Mainline 3-lane | MLK Mainline 2-lane | Subtotal Cost |
| Concrete cap & col | $296.00 | CY | 606 | 2,075 | 2,121 | 1,421,392 |
| Concrete footing | $304.00 | CY | 430 | 1,675 | 1,392 | 1,063,088 |
| Reinforcing | $0.46 | lbs | 99,282 | 358,268 | 337,356 | 365,657 |
| Structural Excavation | $20.22 | CY | 1,066 | 3,612 | 3,350 | 162,326 |
| 12" Piles | $22.57 | LF | | 0 | | 0 |
| 24" Piles | $39.67 | LF | | 132,795 | | 5,267,978 |
| Total Cost | | | | | | $8,280,441 |

Substructure Construction Cost Comparison

| Alternate | Cost | Difference | Cost Index |
|---|---|---|---|
| 1 | $8,831,682 | $551,242 | 1.07 |
| 2 | $8,297,779 | $17,339 | 1.00 |
| 3 | $9,193,868 | $913,428 | 1.11 |
| 4 | $8,597,895 | $317,454 | 1.04 |
| 5 | $8,280,441 | 0 | 1.00 |

**Design Parameters for Stage I and Stage II Structure Plans**

Structural Design Parameters - Stage I

1. Horizontal Clearances

A. Railroads - The normal minimum horizontal clearance from the track centerline to the face of a pier or abutment shall be 18 feet. The minimum horizontal clearance from the track centerline to the face of a pier or abutment for off-track equipment use shall be 26 feet.

On curved track, horizontal clearance shall be increased 1½" per degree of curvature. On superelevated track, clearance on inside of the curve shall be increased by 3½" per each 1" of superelevation.

Edges of footing will not be closer than 11'-0" from centerline of track.

B. Interstate (I-264) - The normal minimum horizontal clearance from the edge of pavement of the thru lane to the face of a pier or abutment shall be 33 feet except at the median. At the median area, the minimum horizontal clearance to the edge of pavement of the thru lane to the face of a pier shall be 6'-0" with a concrete median barrier as per standard drawing MB-7B, sheet 501.30 of the Roads and Bridge Standards.

C. Local Urban Streets - The normal minimum horizontal clearance from the face of curb to the face of a pier or abutment shall be 6 feet with a desirable clearance of 7 feet, 6 inches.

All other horizontal clearances will be in accordance with sheet 9 of 18, File No. 02.01-9 of Volume V - Part 2 of the Manual of the Structure and Bridge Division.

2. Vertical Clearances

A. Railroads - The minimum vertical clearance will be 23 feet.

B. Interstate (I-264) - The minimum vertical clearance will be 16 feet, 6 inches.

C. Local Urban Streets - The minimum vertical clearance will be 14 feet, 6 inches except Columbus Street where it will be 16 feet, 6 inches.

D. Trego Stone Corporation & APAC - VA Incorporation Properties - The minimum vertical clearance will be 16 feet, 6 inches.

3. Roadway Widths

A. Main Line - The distance from face to face of parapets shall be the lane widths plus a 6 foot shoulder on the left and 12 foot shoulder on the right.

B. Two Lane Ramps - The distance from face to face of parapets shall be the lane widths plus a 6 foot shoulder on the left and a 12 foot shoulder on the right.

C. One Lane Ramp - The distance from face to face of parapets shall be the lane width plus a 6 foot shoulder on the left and an 8 foot shoulder on the right.

4. Foundations

Based upon the preliminary boring program, foundations for abutments, piers, and retaining walls will be supported on piles. Final recommendation for pile type and capacity will be submitted to the Department for review and approval based upon the results of the analysis and review of the materials and data obtained from the structural borings provided by the Department.

Structural Design Parameters - Stage II

1. Design Method

Service load (working stress) shall be used.

2. Live Load Capacity

Live load shall be HS20 loading and modified military load.

3. Unit Proportions

Span lengths and girder spacing shall be selected to produce the most economical arrangement. Live load deflections shall not exceed those allowed by the current AASHTO specifications.

4. Superelevation

All curves to be superelevated, transitioned and widened in accordance with the Standard TC-4 of the Roads and Bridge Standards. Point of rotation for superelevation for mainline will be the centerline and the right edge of pavement for the ramps.

5. Deck Cross Slope

All decks shall have a constant cross slope from face to face of parapets.

6. Deck Thickness

The minimum deck thickness shall be in accordance with Volume V - Part 2 of the Manual of the Structure and Bridge Division which includes ½ inch monolithic wearing surface.

7. Unit Weight of Concrete

Plain or Reinforced Concrete = 150 pcf.

8. Deck Forms and Panels

Metal stay-in-place forms or prestressed deck panels as stay-in-place forms will not be used.

9. Reinforced Concrete

All reinforced concrete members shall be designed in accordance with Section 8 - Reinforced Concrete of the current AASHTO specifications including VDOT modifications to these specifications.

10. Prestressed Concrete

All prestressed concrete members shall be designed in accordance with Section 9 - Prestressed Concrete of the current AASHTO specifications including VDOT modifications to the specifications. Prestressed lightweight concrete will not be used due to the increased long-term effect of creep and the problem of the concrete attaining proper release strength within a reasonable time limit.

11. Structural Steel

All structural steel members shall be designed in accordance with Section 10 - Structural Steel of the current AASHTO specifications including VDOT modifications to these specifications. If high-strength steel is utilized, main members shall be designed using ASTM A709, Grade 50 steel. Hybrid Girder design will not be permitted. ASTM A709, Grade 36 steel may be used for secondary members if stresses permit. All structural steel shall be painted.

12. Future Wearing Surface

A future wearing surface load of 15 psf shall be applied to the deck area.

13. Composite Design

All girders will be designed utilizing composite design in accordance with the current AASHTO specifications including VDOT modifications.

14. Cover for Reinforcing and Prestressing Steel

The minimum concrete cover for reinforcing and prestressing steel shall conform to VDOT modifications of AASHTO 8.22.1 and 9.25.1.

15. Corrosion Protective System

Epoxy coated reinforcing steel shall be used in accordance with VDOT modification of AASHTO 8.22.5 with the addition of the abutment backwalls.

16. Wind Loads

Wind loads shall be as specified in AASHTO 3.15-Wind Loads.

17. Earthquake (Seismic) Loading

These structures shall be designed in accordance with the 1983 Standard Specifications for Seismic Design of Highway Bridges with VDOT modifications. The design of these structures shall be for seismic performance. Category A.

18. Inspection Access

Consideration should be given in the layout and design of the proposed structures for providing adequate access for maintenance and inspection of completed structure.

19. Drainage Systems

The bridge drainage systems shall be a "closed system" and designed in accordance with VDOT's memorandum of June 16, 1976 with an allowable spread as follows:

- For one lane of traffic - shoulder width plus three feet of lane encroachment.
- For two or more lanes of traffic - shoulder width plus one half of lane encroachment.

20. Standard Details

The Department will furnish, upon request, reproducibles of the Department's standard details. These standard details shall be utilized to the maximum extent possible in the development of final contract plans.

# APPENDIX B

# I. INTRODUCTION

## 1-01. GENERAL

This report present the results of subsurface investigations and provides preliminary recommendations concerning the feasibility of supporting portions of the Martin Luther King Freeway Extension (Route 58) project on earth embankments.

As shown on Figure 1, "Project Locus", the project site is located north of I-264, east of Frederick Boulevard (Alt. Route 17). south of London Boulevard (Route 141), and west of Elm Avenue (Route 17) in Portsmouth, Virginia.

The proposed project includes extending the existing Martin Luther King Freeway towards the south to connect with Interstate Route I-264 near Columbus Avenue. The highway extension is approximately 5600 feet long from London Boulevard to I-264. It is planned to construct the proposed extension approximately 30 to 35 feet above existing ground surface. It is understood that Queen and High Streets will remain open but County and King Streets will be closed. In addition, access to the railroad yard. including the tracks and the adjacent gravel pit area will be maintained for traffic under the proposed extension. Columbus Street will be relocated towards the north to connect to a proposed ramp on either side of the planned highway extension.

The Subsurface Exploration Location Plans, Figures 2A and 2B, show the approximate limits of the proposed construction in relationship to existing structures and the test borings.

The work summarized herein has been coordinated with David Volkert & Associates, Inc. (DVA) of Alexandria, Virginia, Project Engineer. The Owner is the Virginia Department of Highway & Transportation (VDHT).

## 1-02. PURPOSE AND SCOPE

The purpose of this study was to evaluate the subsurface conditions below the proposed extension alignment and provide initial recommendations regarding the technical feasibility of supporting the proposed extension.

To achieve this objective, a total of 11 test borings and six groundwater monitoring wells were installed by VDHT under the direction of Haley & Aldrich, Inc. (H&A) to define the soil stratigraphy and groundwater conditions at the site.

A laboratory test program, outlined by H&A, was performed by the VDOT laboratories in Richmond, Virginia and Suffolk, Virginia. Engineering analyses were then made to evaluate the settlement and stability of the embankment configurations presented by DVA.

## 1-03. ELEVATION DATUM

Elevation used in this report are referenced to North American Datum of 1983 (NAD 83).



# II. FIELD AND LABORATORY INVESTIGATIONS

## 2-01. PREVIOUS TEST BORINGS

Previous test borings were made at the extremities of the project area by others. These previous explorations were made for the design of the bridges at Des Moines Avenue, Belt Line Railroad, Frederick Boulevard and Route 58 over Harbor Drive prior to recent subsurface investigations. The Des Moines Avenue Overpass borings were drilled in September 1961; the borings for Belt Line Railroad Overpass were drilled in February 1962; the borings for the Frederick Boulevard Overpass were drilled in September 1961; and, borings for Route 58 over Harbor Drive were drilled in December 1965.

Copies of the previous boring logs and the location plans for the borings are included in Appendix B.

## 2-02. RECENT TEST BORINGS

A subsurface exploration program was undertaken at the site between 20 March and 7 April 1992 to obtain subsurface information for the initial design analyses. The program consisted of drilling 11 test borings along the proposed extension alignment and the proposed ramp to relocated Columbus Street. The borings were drilled to depths ranging from 60.5 to 80.5 feet below existing ground surface by VDHT using a drill rig mounted on an All Terrain Vehicle (ATV).

The borings were monitored in the field by Haley & Aldrich personnel. As-drilled locations and ground surface elevations were obtained by Talbot & Associates, Ltd., Virginia Beach, Virginia. Copies of the test boring logs are included in Appendix A.

The borings were drilled using a 10 inch diameter hollow stem auger. Split-spoon samples were obtained at 5 foot intervals to depth of the borings. The standard penetration resistance, "N", was determined at each sample level by counting the number of blows required to drive a standard split-spoon sampler (1⅜ in. I.D., 2 in. O.D.) a distance of 18 inches into the undisturbed soil under the impact of a 140-lb. hammer free-falling 30 inches. The number of blows required to advance the sampler each six inches was recorded. The "N" value is taken as the number of blows required to advance the sampler the last 12 inch of the 18 inch sampling range.

Subsequent to the completion of the test borings, 12 undisturbed Shelby-tube samples were obtained from borings drilled adjacent to the previously drilled borings B92-2, B92-4, B92-5, B92-6 and B92-8. Undisturbed Shelby tube samples were obtained of the organic PEAT, SILT and CLAY, and SAND and SILT strata. These subsequent borings were labeled the A-series borings. The logs of the A-series borings are also included in Appendix A. All samples (split-spoon and Shelby tubes) recovered from the borings were taken to VDHT's office for laboratory testing.

## 2-03. GROUNDWATER OBSERVATION WELLS

Groundwater observation wells were installed in six borings which were also drilled adjacent to the original test borings. The wells were installed near borings B92-1, B92-3, B92-5, B92-7, B92-8 and B92-10 with the bottom of the well tips at a depth of approximately 10 feet below ground surface. The relationship of the well point depths to the major soil strata are shown on the Centerline Subsurface Profile, Figure 3.

The observation wells consisted of a 2 in. I.D. slotted PVC well point attached to a 2 in. I.D. PVC riser pipes. The annular space surrounding each well point was backfilled with coarse sand. The top of each observation well was provided with a concrete and bentonite seal and encased in a protective roadway box. Observation well installation reports are included in Appendix C.

## 2-04. LABORATORY TESTING

A laboratory testing program was undertaken as part of this investigation to assist in soil classification and analysis of the geotechnical engineering aspects of the project. The laboratory program was outlined by H&A. All laboratory tests were performed by VDHT in their Richmond, Virginia and Suffolk, Virginia laboratories in accordance with VDHT procedures.

The tests performed included natural moisture content, Atterberg Limit determination, grain size analyses, one-dimensional consolidation and simple direct shear. The results of the laboratory tests are included in Appendix D.



# III. SITE AND SUBSURFACE CONDITIONS

## 3-01. SITE CONDITIONS

The Martin Luther King Freeway Extension will connect the existing Martin Luther King Freeway (Route 58) with Interstate Route I-264 in Portsmouth, Virginia as shown on Figure 1, "Project Locus". The alignment will extend over existing Harbor Drive, crossover an active railroad yard and gravel pit and connect to Rte. I-264 in the vicinity of Columbus Avenue. The elevation of the proposed highway extension will range between El. 40 to El. 50, approximately 30 to 35 feet above the currently existing ground surface.

Topographically, the existing ground surface in the highway extension alignment is relatively level, except in the gravel pit area north of the railroad yard. The grades on the north end of the highway alignment range from El. 11 to El. 12 sloping down to El. 10 near boring B92-3. The grades then gradually increase to El. 16 near boring B92-5, then slope down again to El. 12 near boring B92-9.

## 3-02. SUBSURFACE CONDITIONS

Geologically, the project area is underlain by sediments of the late Pleistocene Tabb Formation. The Tabb Formation extends north to James River and to the south of Portsmouth. This formation generally consists of clayey, silty, sandy soils and buried swamp remains.

The explorations along the project alignment confirmed these soil units. The subsurface explorations revealed the following sequence of soil strata from the ground surface downward:

- Fill
- Alluvial Deposits
  - Sand
  - Silty Clay
  - Peat
  - Silty Clay
  - Sand
  - Clay

The above sequence reflects the order of occurrence of the units below ground surface, however, one or more of these units may be absent at specific locations.

The various strata encountered in the test borings are discussed below in sequential order below ground surface. Strata thicknesses refer to information from the recent borings. Detailed soil sample descriptions are given on the boring logs in Appendix A. The general relationship of these materials, interpreted from the recent test borings, is shown on the Centerline Subsurface Profile (Figure 3).

**Strata 1 - Fill**

Borings B92-4 through B92-6 encountered surficial Fill or Possible Fill to a depth ranging from 0.5 to 1.5 feet below ground surface. The Fill soils are classified as gray fine to coarse GRAVEL

in borings B92-4 and B92-5 and medium dense fine to medium SAND and silty CLAY in boring B92-6. The SPT N-values in the fill ranged from 11 to 13. A 4-inch thick layer of topsoil was also encountered in boring B92-2.

**Strata 2 - Alluvial**

Substrata 2A - SAND

Below the fill and topsoil, the uppermost naturally deposited soil consists of layer of very loose to medium dense fine to medium SAND with varying amount of silt. This substrata was encountered in all the borings to depths varying from 20 to 31.7 feet below ground surface. The natural moisture content of soils recovered from this substrata ranged from 6 to 35 percent, and SPT N-values range from weight of hammer (WH) to 17 bpf.

Atterberg Limit tests performed in the VDHT laboratory indicate Liquid Limits between 13 and 37 percent and Plasticity Indices between non-plastic to 3 percent. A simple direct shear test performed on an undisturbed Shelby tube sample from boring B92-6 indicated that this soil has a cohesion value of 400 psf and angle of internal friction of 38.5 degrees.

In boring B92-1, a two feet thick layer of silty CLAY with some peat was encountered in this substrata at depth of 25 feet below ground surface. A two feet thick layer consisting of SAND mixed with SILT and CLAY was encountered just below the ground surface in boring B92-2. A three feet thick layer of medium stiff silty CLAY with little sand was encountered at depth of four feet below ground surface in boring B92-5.

Substrata 2B - silty CLAY

Below the sand, a five to 15 feet thick layer described as very soft to soft silty CLAY with trace of peat was encountered in borings B92-5 through B92-11. The natural moisture content of soils recovered from this substrata ranged from 65 to 69 percent, and SPT N-values range from weight of hammer (WH) to 4 bpf.

Atterberg Limit tests performed in the VDHT laboratory indicate Liquid Limits between 44 and 56 percent and Plasticity Indices between 19 to 22 percent. Simple direct shear tests on relatively undisturbed Shelby tube samples from borings B92-6 and B92-8 in this layer indicate a cohesion value varying from 790 to 1030 psf and angle of internal friction varying from 13.5 to 17 degrees. A consolidation test performed on an undisturbed Shelby tube sample from boring B92-8 indicated a compression ratio (CR) of 0.34, and a recompression ratio (RR) of 0.025. The silty clay is slightly overconsolidated, having an Over Consolidation Ratio (OCR) of 2.1.

Substrata 2C - PEAT

Organic PEAT was encountered in all the borings below the sand in borings B92-1 through B92-4 and below the silty CLAY in borings B92-5 through B92-11. This layer is described as very soft to medium stiff organic PEAT mixed with SILT and CLAY. The thickness of the peat layer varied from six to 23 feet with the stratum thickening toward the south. The natural moisture content of soils recovered from this substrata ranged from 34 to 81 percent, and SPT N-values range from weight of hammer (WH) to 9 bpf.



Atterberg Limit tests performed in the VDHT laboratory indicated Liquid Limits between 21 and 75 percent and Plasticity Indices between non-plastic to 20 percent. A simple direct shear test performed on relatively undisturbed Shelby tube sample from boring B92-8 indicated that the peat has a cohesion value of 240 psf and angle of internal friction of zero degrees. Consolidation tests performed on thin walled tube samples from borings B92-2, B92-4 and B92-8 indicate compression ratios (CR) varying between 0.14 to 0.58, and recompression ratios (RR) varying between 0.029 to 0.087; the peat layer is normally consolidated to overconsolidated. The Over Consolidation Ratio (OCR) varies from 2.6 to 3.0 in borings B92-4 and B92-2, respectively.

Substrata 2D - silty CLAY

Below the PEAT layer, a clayey SILT to silty CLAY layer with varying amount of sand was encountered in borings B92-2, B92-4, B92-5, B92-10 and B92-11. The thickness of this layer varied from three to 14 feet. The SPT N-values varied from weight of hammer (WH) to 16 bpf and the natural moisture content was 37 percent.

Atterberg Limit tests performed in the VDHT laboratory indicate Liquid Limit of 25 percent with the sample being non-plastic. A consolidation test performed on a relatively undisturbed Shelby tube sample from boring B92-4 indicated a compression ratio (CR) of 0.056, and a recompression ratio (RR) of 0.014. The sample is slightly overconsolidated with Over Consolidation Ratio (OCR) of 1.91.

Substrata 2E - SAND

Below the PEAT and silty CLAY layers, a thick layer of loose to very dense fine SAND with varying amounts of silt mixed with peat was encountered in all the borings. The thickness of this layer varied from seven to 28 feet. Borings B92-1, and B92-5 through B92-7 terminated in this material. The SPT N-values varied from 1 to 38 bpf and the natural moisture content varied from 27 to 55 percent.

In boring B92-6, a 9 foot thick soft silty clay layer was encountered at depth of 63 feet below existing grade.

When attempting to obtain split-spoon samples of this soil during the test boring program, this material typically "ran-up" into the hollow stem auger. This condition occurred primarily because of the unbalanced hydrostatic head between the naturally occurring groundwater level and the water level inside the hollow stem auger. The driller attempted to counteract this condition by keeping a higher level of water in the hollow stem auger; but these attempts were unsuccessful. This "run-up" condition most likely resulted in the lower observed densities of this stratum.

Substrata 2F - CLAY

A very soft to medium stiff gray CLAY mixed with silt was encountered in borings B92-2 through B92-4, and B92-8 through B92-11 below the substrata 2E. These borings terminated in this substrata. The SPT N-values varied from weight of hammer (WH) to 9 bpf and the natural moisture content was 27 percent.

### 3-03. GROUNDWATER OBSERVATIONS

Water levels measured in boreholes upon completion of a boring do not necessarily represent the true, stabilized groundwater table. Therefore, to monitor the local subsurface water levels over a extended period of time, observation wells were installed in six test borings. (As previously noted, these test borings were drilled specifically for the installation of the wells immediately adjacent to the originally drilled test borings).

Groundwater levels observed in the observation wells to 1 June 1992 indicate groundwater levels to range between El. 3.2 to El. 12.7. The groundwater observations are presented on the test boring logs (see Appendix A). In addition, a summary of the groundwater observations are presented in Table I.

It is important to note that water level readings recorded in observation wells have been made at times and under conditions stated on the boring logs. It should be expected that water levels will fluctuate with tidal influence, precipitation, season, temperature, changes in topography and other factors. Thus, water levels observed at future times may vary from those observed in the subsurface explorations.



## IV. ANALYSES AND PRELIMINARY RECOMMENDATIONS

### 4-01. GENERAL

This initial investigation was performed for the design and construction of the Martin Luther King Freeway Extension taking into consideration the proposed alignment of the highway and adjacent existing structures and utility lines as known at this time. Our analyses and preliminary recommendations are based on the design criteria provided by DVA and the subsurface information obtained for this investigation as previously discussed. If the proposed alignment is altered or further information becomes available such that the design criteria used in this initial study are modified, the recommendations presented in this report should be reviewed by H&A for continued applicability.

### 4-02. PROPOSED CONSTRUCTION

As previously discussed, the proposed construction includes extending the existing Martin Luther King Freeway (Route 58) from London Boulevard southward to connect to Interstate Route I-264 near Columbus Avenue. The planned extension will consist of an approximately 5600 feet long six lane highway with associated ramps and bridge structures, constructed through developed residential, commercial and industrial sections of Portsmouth, Virginia.

In order to rise above and span over the existing improvements in the area, the planned alignment requires that the structure be elevated between 30 to 40 feet above the existing ground surface.

### 4-03. ANALYSES

The purpose of this initial design phase study was to assist DVA in determining the technical and economic feasibility of supporting sections of the planned alignment on earth embankment with 2H:1V side slopes, or with the use of vertical walls supported by Reinforced Earth or reinforced concrete walls on pile foundations to support the embankment.

To assist us in our studies, DVA provided nine cross-sections along the proposed highway alignment. Copies of the cross-sections have been included in Appendix E. Based on the proposed mainline alignment and ramp locations, settlement analyses were performed at five stations and slope stability analyses performed at four stations. The locations and the result of our analyses, which are summarized on Table II are discussed below.

A. Stability Analyses

Stability analyses were performed on the cross-sections at Sta. 1016+20, Sta. 1009+40, Sta. 1004+50 and Sta. 409+45 (Refer to figures in Appendix F). Soil strength characteristics as determined by the direct shear strength tests performed on relatively undisturbed Shelby tube samples of natural silty clay and organic peat were used in the analysis. The analysis were made using computer program PCSTABL 5M which was developed by Purdue University and uses Modified Janbu Method of analyses. The analysis results are summarized on Table II and the figures in Appendix F.

The analyses indicate that the computed minimum factor of safety is 1.6 for the soil strength parameters assumed and the indicated embankment configurations. The soil strength properties used in the analyses are tabulated on page F-1 in Appendix F. The relative positions of the most critical failure surfaces as determined by the computer model are shown on the figures in Appendix F (indicated by the dashed line). As indicated therein, the failure surfaces in most cases are in the 2H:1V side slope of the embankment. This indicates that the proposed side slope of the embankment is essentially stable, but the actual factor of safety will be dependent on the selection of the materials used in this zone during construction as well as the quality of its placement and compaction.

B. Settlement Analyses

Settlement estimates for the proposed embankment configurations prepared by DVA (Refer to Appendix E) were made considering the soil conditions illustrated in Figure 3. The settlement analyses utilized the results of the consolidation tests performed on the silty clay and peat encountered in the borings as well as assumed elastic properties of the embankment fill soils and the naturally-deposited fine to medium sands underlying the site.

The total settlements tabulated on Table II consist of three components:

- Consolidation settlements of the silty clay and peat soils;
- Elastic settlements of the naturally deposited fine to medium sands underlying the site; and
- Elastic settlements within the filled embankment.

It should be noted that the nearly 40 foot height of new fill, with an assumed total unit weight of 130 pcf, could provide a maximum loading of approximately 5000 psf on the compressible peat and soft silty clays.

Considering the three component listed above, our analysis indicate that the total settlements could reach 19 inches in the area between Sta. 1031+00 and 1045+00 (10 inches as shown on Table II, with the addition of possibly another 9 inches due to compressible soils possibly existing below the depth of the test boring).

For area between Sta. 1000+00 and 1031+00 the total settlements could be as high as 38 inches as indicated on Table II.

Of the total estimated settlements shown in Table II, the elastic settlements of the embankment and naturally deposited sands underlying the site will occur mostly during construction. However, consolidation of the peats and clays will continue in some areas of the alignment long after the embankment construction is complete. The estimated settlement that will occur after the embankment is complete is primarily attributed to the consolidation of the clays and peats, and is estimated to be in the range of 12 to 15 inches and 24 to 29 inches, respectively. The actual settlement that could develop after paving depends on the rate of filling, the time between completing the embankment and placing the pavement, and drainage conditions above and below the silty clay and peat zones. Our present estimates indicate that settlement could continue to



occur in some sections of the alignment for 15 years or more after the embankment is completed.

## 4-04. EMBANKMENT SETTLEMENT IMPLICATIONS

A. Pile Supported Reinforced Concrete Retaining Walls

For the pile supported reinforced concrete retaining wall design shown on the figures in Appendix E, the calculated settlements could have the following implications:

- Approximately between Sta. 1026+00 and 1045+00 where reinforced concrete retaining walls exist on both sides of the alignment, the maximum settlement will occur within the embankment with minor settlements occurring outside the alignment, beyond the outside face of the retaining walls.

  The settlements within the embankment will be at a maximum in the center (19 to 24 inches) and gradually reducing to minor settlements above the toe of the wall. The amount of settlement above the toe of the wall will be dependent on how much the retaining wall settles, a value which is difficult to calculate. Utilities that are constructed within the embankment should be either designed to settle or be installed after the majority of the settlement has taken place.

- The embankment settlements will cause downdrag forces on the piles which will have to be taken into consideration during final design.

- The lateral extent and magnitude of the settlement trough outside the retaining structures will be dependent on how much the retaining wall settles. Utilities and structures immediately outside the retaining wall limits could settle due to the embankment settling inside the retaining walls.

- Approximately between Sta. 1016+00 and Sta. 1004+50 the same implications as above apply adjacent to the retaining wall. However, on the sloped embankment side, the settlement of the embankment fill will create a settlement trough that extends approximately 160 feet from the centerline of the embankment.

If this option is considered a possible design alternative, the settlement within the embankment could be accelerated by the use of sand drains and soil preloading. With accelerated settlements, the utility installation and final paving could be delayed until most of the settlement has occurred.

Another alternative would be to reduce the settlements by constructing the embankment using lightweight fill or constructing the embankment in stages.

B. Embankments Supported by Reinforced Earth

As an alternative to the pile supported reinforced concrete retaining walls, embankments supported by Reinforced Earth or similar technologies were evaluated for the zones between Sta.

1032+00 to Sta. 1039+00 and Sta. 1044+00 to 1050+00. The implications of the calculated settlements on this design are as follows:

- The embankments supported by Reinforced Earth would most likely settle as a unit with only a slight settlement trough occurring in the embankment. However, the settlement trough beyond the embankment limits could extend to a distance of approximately 160 feet from the centerline of the embankment. This settlement would be greatest at the embankment centerline and decrease with distance away from the centerline. This settlement could have potential adverse effects on the existing and proposed utilities and structures within this zone.

- Based on our discussions with the Reinforced Earth personnel and representatives of other similar wall types, these types of walls can typically tolerate differential settlements of one percent (12 in. in 100 ft.). If larger differential settlements are anticipated, slip joints can be provided at 50 to 100 feet intervals to reduce the effect of differential settlements on the walls.

- In order to reduce the magnitude of the settlements, Reinforced Earth or similar type wall units can be constructed using light weight fill or can be constructed in stages.

- As for the conventional reinforced concrete retaining wall design, sand drains and soil preloading can be utilized to accelerate the settlements and reduce the associated post-construction settlements.

## 4-05. ESTIMATED PILE LENGTHS

Due to the magnitude of estimated settlements, reinforced concrete retaining walls used to support the highway embankment should be founded on piles. (Reinforced Earth supported embankments can be supported on existing grade.) The embankment sections in Appendix E indicate this.

It is our understanding that typically the most economical pile type in the project vicinity is a 12 inch octagonal precast prestressed concrete pile.

Considering this pile type with an allowable design capacity of 36 to 40 tons per pile, the estimated length of the piles required to support the retaining walls shown on the cross sections in Appendix E has been summarized on Table III.

The calculated pile lengths have considered the negative skin friction that will develop along the perimeter of the pile due to the clay and peat consolidating under the embankment weight. The downdrag force between Sta. 1000+00 and 1031+00 is particularly significant due to the thickness and drainage conditions of the soft silty clay and compressible peat resulting in this area.

## 4-06. PRELIMINARY RECOMMENDATIONS

In consideration of the estimated embankment settlements and the potential influence of the settlements beyond the proposed highway alignment to a distance of 160 feet from the alignment



centerline, it is recommended that the proposed highway extension not be supported on an embankment, but rather on an elevated structure.

The abutments and piers for the overpasses and the elevated structures should be supported on piles. For preliminary design purposes the piles should be assumed to be 36-ton design capacity 12-inch octagonal precast prestressed concrete piles driven into the naturally deposited clay and sand layers underlying the site using VDHT standard pile driving criteria.

During final design, however, a more through economic and technical assessment should be made to establish the most appropriate pile type(s). (The information we received with regard to the foundation designs of the four existing bridges in the project vicinity indicate that they were designed to be supported on precast prestressed concrete piles or cast-in-place piles.)

For the highway supported on structure, we estimate the pile tip levels will vary between El. -29.4 to El. -47.5 between Sta. 1020+00 and Sta. 1050+00, and between El. -64.0 to El. -68.2 from Sta. 1000+00 to Sta. 1020+00 (refer to Table III). The piles should be driven through the loose to medium dense sand, and very soft to soft peat and silty clay of variable thickness before penetrating into and terminating in the natural medium dense to dense sandy soils. (Substratum 2E).

## V. ADDITIONAL INVESTIGATION

### 5-01. GENERAL

Considering the results of the analyses conducted for this initial phase and the recommendations provided, additional subsurface information will have to be obtained before the final project design is completed. Our specific comments follow:

### 5-02. ADDITIONAL BORINGS

After obtaining approval on the highway extension alignment from VDHT, the locations of the piers and abutments to support the elevated structure will need to be established. Additional borings at the new locations of the abutments and piers will be required to obtain sufficient subsurface information to refine the length of the piles for the final design.

### 5-03. DEPTH OF BORINGS

The recent subsurface exploration program was performed at the site to obtain soil and groundwater data necessary to evaluate the technical feasibility of supporting portions of the proposed highway extension on an embankment. The depth of the test borings were selected based on pile lengths for the bridge overpasses at the extremities of the project area.

The recent test borings were drilled to depths of approximately 60 feet below ground surface in all the borings except boring B92-6 which was drilled deeper to locate the bottom of the soft silty clay below the peat and sand layer. Considering the calculated lengths of piles necessary to support the elevated highway structure, the subsurface information obtained from the recent borings will not be adequate for final design, especially on the south side between Sta. 1000+00 and Sta. 1020+00. During the next phase of the project, deeper borings will be required in this area to obtain information necessary to review the lengths of the piles. The computed length of piles during this study extended below the depth of the borings.

During the design phase of the project, we recommend that depth of borings be at least 100 feet below the existing ground between Sta. 1000+00 and Sta. 1020+00. The depth of borings between Sta. 1020+00 and Sta. 1050+00 should be increased to approximately 80 feet below existing ground surface to obtain adequate subsurface information to design the piles.

### 5-04. METHOD OF EXPLORATION

During the recent subsurface exploration program, sandy soils below the groundwater table typically "ran-up" into the hollow stem auger when attempting to obtain split-spoon samples. The driller attempted to counteract this phenomenon by keeping the water level inside the auger at a higher level than the groundwater level, but these attempts were unsuccessful. This phenomenon most likely resulted in lower than anticipated "N" values in the sand. This observation can be confirmed by reviewing the test boring logs from the bridge overpasses at the extremities of the project area.



We recommend that the design phase test borings be conducted in cased boreholes to obtain better data in the sandy soils. In addition, if necessary to keep the sandy soils from "running-up" inside the casing, heavier drilling fluids should be used to stabilize the soils below the boreholes.

In addition, since the piles that will be required to support the elevated structure will most likely derive their support from the sandy soils underlying the site, it is recommended that additional insitu testing be performed in the boreholes to better evaluate the soil properties. In-situ testing consisting of cone penetrometer, dilatometer or pressuremeter testing should be considered during the design phase explorations.

## VI. LIMITATIONS

This report has been prepared for application to the Martin Luther King Freeway Extension project as understood at this time, in accordance with generally accepted geotechnical engineering practices common to the local area. No other warranty, expressed or implied, is made.

In the event that changes in the nature, design or alignment of the planned highway are made, the conclusions and recommendations contained in this report should not be considered valid, unless the changes are reviewed by H&A and the conclusions of this report modified or verified in writing.

The analyses and recommendations contained in this report are based, in part, upon the data obtained from the referenced subsurface explorations. The nature and extent of variations between the explorations may not become evident until revealed during construction. If variations then appear evident, it will be necessary to re-evaluate the recommendations in this report.



## VII. SUMMARY

### 7-01. GENERAL

This report presents the initial findings of a subsurface investigation and geotechnical engineering evaluation of the site proposed for the Martin Luther King Freeway Extension in Portsmouth, Virginia as shown on Figure 1, "Project Locus". The locations of the test borings and the proposed highway alignment are shown on Figures 2A and 2B.

Our assessment of the geotechnical engineering issues now evident at the site is based on the subsurface data from the current investigation and the noted design criteria provided to us by DVA.

A summary of the investigation results and the preliminary recommendations for design and construction of geotechnical engineering elements of the project are listed below. Details of the investigation and engineering recommendations are included in the text section of this report.

The proposed highway construction includes approximately 5600 feet long pavement extension of Route 58; the alignment is planned to be approximately 37 feet above existing ground surface.

### 7-02. FIELD AND LABORATORY INVESTIGATIONS

A. Recent subsurface and laboratory investigations were performed at the site for the proposed Martin Luther King Freeway Extension which consisted of the following:

- A total of 11 test borings drilled by VDHT at the site under H&A's direction to depths of 60 to 80 feet below ground surface. The boring logs are presented in Appendix A, and the locations are shown on Figures 2A and 2B.

- A total of six groundwater observation wells were installed in selected borings. The installation record and monitoring data are provided in Appendix C and Table I, respectively.

- A laboratory testing program was conducted to aid in soil classification and engineering analysis. The laboratory tests were outlined by H&A and performed by VDHT in their laboratories. The test results are included in Appendix D.

B. The test borings indicate a soil sequence below the site as follows:

- A surfacial fill in borings B92-4 through B92-6 varying in thickness from 0.5 to 1.5 feet.

- Alluvial deposits from the ground surface downward consisting of the following substrata:
  - Sand, 20 to 32 feet thick;
  - Silty Clay, 5 to 15 thick in borings B92-5 through B92-11;
  - Peat, 6 to 23 feet thick;
  - Silty Clay, 3 to 14 feet thick in borings B92-2, B92-4, B92-5, B92-10, and B92-11;

- Sand, 7 to 28 feet thick; and
- Clay in borings B92-2 through B92-4, and B92-8 through B92-11.

C. Groundwater observations indicate the groundwater level varies between El. 3.2 and El. 12.7.

## 7-03. ANALYSIS AND PRELIMINARY RECOMMENDATIONS

An evaluation was made to assess whether it was technically feasible to support portions of the proposed highway alignment on an earth embankment. The initial study included slope stability and settlement analyses based on the information provided by DVA, using the recent subsurface information and laboratory testing results.

The analyses indicated the following results:

A. Slope Stability Analyses

- The 2H:1V side slopes of the proposed embankment are essentially stable. (Refer to Table II)

B. Settlement Analyses

- Approximately 19 inches of settlement between Sta. 1031+00 and Sta. 1045+00 and approximately 38 inches between Sta. 1000+00 and Sta. 1031+00 will occur in the embankment due to its loading on the subsurface soils. The estimated settlements are presented in Table II.

- The settlements could extend out a distance of up to 160 feet from the embankment centerline.

- Pile supported reinforced concrete retaining walls and embankments supported by reinforced earth will have similar implications on properties and utilities adjacent to the proposed extension alignment due to the resulting settlement trough.

  Sand drains in combination with soil preloading can be used to accelerate the settlements and reduce associated post-construction settlements.

  The magnitude of the settlements can be reduced by using lightweight fill and/or constructing the embankment in stages.

C. Estimated Pile Lengths

It is our understanding that typically the most economical pile type in the project vicinity is a 12 inch octagonal precast prestressed concrete pile. The estimated pile lengths for retaining walls in combination with earth embankment and for proposed alignment on elevated structure are presented in Table III.



D. Recommendations

The magnitude of the estimated settlements and the potential influence of the settlement beyond the right-of-way of the proposed highway preclude the use of earth embankment at the site.

It is recommended that the proposed highway extension be supported on elevated structure. The abutments and piers for the overpasses including the elevated structure should be supported on piles.

## 7-04. ADDITIONAL INVESTIGATION

The recent test borings did not provide sufficient information for final design of the piles. Additional borings will be required during final design, and the borings will be required to penetrate deeper in areas where the estimated settlements are in the range of 24 to 38 inches.

HALEY & ALDRICH, INC.

TABLE I

SUMMARY OF GROUNDWATER ELEVATIONS

Martin Luther King Freeway Extension
Portsmouth, Virginia

| Well No. | Top of Well Cover El.[1] | Depth to Groundwater | Groundwater Elevation | Date |
|---|---|---|---|---|
| B92-1 | 11.1 | 5.9<br>6.6 | 5.2<br>4.5 | 7 April 1992<br>1 June 1992 |
| B92-3 | 10.8 | 7.0<br>7.6 | 3.8<br>3.2 | 7 April 1992<br>1 June 1992 |
| B92-5 | 15.0[2] | 2.3<br>3.0 | 12.7<br>12.0 | 7 April 1992<br>1 June 1992 |
| B92-7 | 12.8 | 3.1<br>3.8 | 9.7<br>9.0 | 7 April 1992<br>1 June 1992 |
| B92-8 | 12.7 | 2.9<br>2.8 | 9.8<br>9.9 | 7 April 1992<br>1 June 1992 |
| B92-10 | 13.4 | 2.9<br>3.4 | 10.5<br>10.0 | 7 April 1992<br>1 June 1992 |

NOTES

(1) All elevations and depths are in feet.

(2) The top of groundwater observation well B92-5 was never surveyed. The elevation shown is estimated from topographic data in the boring vicinity.

HALEY & ALDRICH, INC.

TABLE II
STABILITY AND SETTLEMENT ANALYSES
Martin Luther King Expressway Extension
Portsmouth, Virginia

| Boring Number | Mainline Station | Ramp SW Station | Ramp EN Station | Ramp WN Station | Proposed Roadway Elevation | Existing Elevation | Height of Embankment | Slope Stability Analyses | Settlement [1] Analyses | 90% Consol. Time $t_{90}$ |
|---|---|---|---|---|---|---|---|---|---|---|
| B92-1 | 1045+30 | | | | -- | 11.1 | -- | -- | -- | -- |
| B92-2 | 1038+75 | | | | 39.4 | 10.6 | 28.8 | -- | $\Delta\rho$=8 to 10 in.[2] | 0.5 month |
| B92-3 | 1033+70 | | | | 38.3 | 10.4 | 27.9 | -- | $\Delta\rho$=8 to 10 in.[2] | 1.2 month |
| B92-4 | 1027+80 | | | | 44.9 | 11.5 | 33.4 | -- | $\Delta\rho$=13 to 15 in.[2] | 7.3 month |
| B92-5 | 1022+30 | | | | -- | 15.6 | -- | -- | -- | -- |
| B92-6 | 1016+20 | | | | 47.9 | 13.7 | 34.2 | FOS=1.8[3] | -- | -- |
| B92-7 | | 703+80 | | | -- | 12.2 | -- | -- | -- | -- |
| B92-8 | 1009+40 | | | | 51.2 | 12.0 | 39.2 | FOS=2.0 | $\Delta\rho$=29 to 38 in. | 184 months |
| B92-9 | 1004+50 | | | | 40.0 | 11.8 | 28.2 | FOS=1.7 | $\Delta\rho$=24 to 32 in. | 110 months |
| B92-10 | | | 303+80 | | -- | 13.4 | -- | -- | -- | -- |
| B92-11 | | | | 409+45 | 43.9 | 12.7 | 31.2 | FOS=1.6 | -- | -- |

1 Settlement computations are based on the soil information obtained for this study. The depth of settlement influence zone is approximately twice the width of the new fill. Elastic settlement of the granular soils will occur mostly during construction. Time for consolidation of the cohesive soils are shown in the $t_{90}$ column above.

2 An additional 9 inches of settlement should be added to these settlement estimates due to potentially compressive soils existing below the depth of the test borings drilled to date.

3 the 10 most critical failure surfaces are shown on figures in Appendix F

FOS = Factor of Safety
$\Delta\rho$ = Settlement

HALEY & ALDRICH, INC.

TABLE III

ESTIMATED PILE LENGTHS

Martin Luther King Freeway Extension
Portsmouth, Virginia

| Boring Number | EMBANKMENT | | | ELEVATED STRUCTURE | | |
|---|---|---|---|---|---|---|
| | Estimated Pile Length[1] (feet) | Approximate Pile Tip Elevation (feet) | Computed Capacity (tons) | Estimated Pile Length[1] (feet) | Approximate Pile Tip Elevation (feet) | Computed Capacity (tons) |
| B92-1 | 58 | -46.9 | 36.6 | 56 | -44.9 | 37.6 |
| B92-2 | 52 | -41.4 | 38.9 | 40 | -29.4 | 36.4 |
| B92-3 | 56 | -45.6 | 36.2 | 48 | -37.6 | 36.5 |
| B92-4 | 75 | -63.5 | 37.5 | 51 | -47.5 | 39.8 |
| B92-5 | 66 | -50.4 | 36.2 | 46 | -30.4 | 38.8 |
| B92-6 | 100 | -86.3 | 41.7 | 80 | -66.3 | 40.0 |
| B92-8 | 95 | -83.0 | 36.0 | 76 | -64.0 | 36.1 |
| B92-9 | 100 | -88.2 | 39.4 | 80 | -68.2 | 37.3 |

(1) These lengths were computed using a 12-inch octagonal precast prestressed concrete pile.

APPENDIX A

Logs of Recent Test Borings

# TEST BORING LOG

| Job Number | Client/Project | Sheet No. | Boring No. |
|---|---|---|---|
| 65190-00 | David Volkert & Associates, Inc.<br>Martin Luther King Freeway Extension | 1 of 2 | B92-1 |

Project Location: Portsmouth, Virginia

Logged: Harvey Beaulieu

SAMPLE LEGEND:
- NR = Sample Not Recovered
- SS = Standard Penetration Split Spoon Sample
- ST = Pushed Shelby Tube
- B = Disturbed Bag Sample
- LL = Liquid Limit
- PI = Plasticity Index
- AC = Auger Cutting

| Start | Finish | Driller/Subcontractor | Drill Make & Model | Total Depth (ft) |
|---|---|---|---|---|
| Time: 9:30am<br>Date: 3-31-92 | Time: 10:47 am<br>Date: 3-31-92 | Richard Stallings<br>VDH&T | CME 45 ATV | 60.5 |

| Water Level Observations Date | Time | Boring Depth(ft) | Casing Depth(ft) | Caved Depth(ft) | Water Depth(ft) |
|---|---|---|---|---|---|
| 3-31-92 | 9:45am | 10.5 | N/A | N/A | 7.7 |
| 3-31-92 | 11:15am | 60.5 | N/A | 6.0 | 5.5 |
| 4-1-92 | 11:20am | 11.0* | 10.0* | N/A | 5.5* |
| 4-7-92 | 5:18pm | 11.0* | 10.0* | N/A | 5.6* |

| SAMPLE TYPE | SAMP. ADV. CORE LENG. (ft) | SAMPLE REC. CORE REC. (ft) | SAMPLE BLOWS /CORE RECOVERY RQD | N" VALUE BLOWS/FOOT | LAB TESTS: MOISTURE CONTENT (%) | LL | PI | ELEV. (ft) +1 | DEPTH (ft) | GRAPHICS SAMPLE | STRATA DEPTH (ft) | DESCRIPTION AND CLASSIFICATION | WELL | REMARKS |
|---|---|---|---|---|---|---|---|---|---|---|---|---|---|---|
| | | | | | | | | 11.1 | | | | | | |
| SS 1 | 1.5 | 1.5 | 1-2-3 | 5 | 13 | | | | 5 | | | Loose gray, tan f-m SAND, tr. silt, moist | | *-marked water level readings are from observation well no. 1<br>Additional water readings are shown on the last B92-1 log sheet |
| SS 2 | 1.5 | 1.5 | 2-2-3 | 5 | | | | | 10 | | | --, yellow-brown, gray-tan-brown, wet | | |
| SS 3 | 1.5 | 1.5 | 1-3-3 | 6 | | | | | 15 | | | Loose gray f SAND, little silt, wet | | |
| SS 4 | 1.5 | 1.5 | WR/6-WH/6-2 | 2 | | | | | 20 | | | Very loose gray f-m SAND, tr. silt, wet | | |
| | | | | | | | | -11 | | | 22.0 | SAND/ALLUVIAL | | |
| SS 5 | 1.5 | 1.5 | WH/6-1-1 | 2 | | | | -14 | 25 | | 25.0 | Very loose gray f SAND AND SILT, tr. mica, wet<br>SAND AND SILT/ALLUVIAL | | |
| | | | | | | | | -16 | | | 27.0 | Very soft gray silty CLAY, some peat, very moist<br>silty CLAY/peat/ALLUVIAL | | Qp < 0.25 tsf |
| SS 6 | 1.5 | 1.5 | WH/18 | WH/12 | 35 | | | | 30 | | | Very loose gray f SAND, some silt, tr. mica, wet | | |
| | | | | | | | | -21 | | | 31.7 | SAND/silt/ALLUVIAL | | |

HALEY & ALDRICH, INC.
Bethesda, Maryland

BORING NO. B92-1

# TEST BORING LOG

| Job Number | Client/Project | Sheet No. | Boring No. |
|---|---|---|---|
| 65190-00 | David Volkert & Associates, Inc.<br>Martin Luther King Freeway Extension | 2 of 2 | B92-1 |
| **Project Location** | | **Logged** | |
| Portsmouth, Virginia | | Harvey Beaulieu | |

| SAMPLE TYPE | SAMP. ADV. CORE LENG. (ft) | SAMPLE REC. CORE REC. (ft) | SAMPLE BLOWS/CORE RECOVERY RQD | N" VALUE BLOWS/FOOT | LAB TESTS: MOISTURE CONTENT (%) | LL | PI | ELEV. (ft) +1 | DEPTH (ft) | GRAPHICS | SAMPLE | STRATA DEPTH (ft) | DESCRIPTION AND CLASSIFICATION | WELL | REMARKS |
|---|---|---|---|---|---|---|---|---|---|---|---|---|---|---|---|
| SS 7 | 1.5 | 1.5 | WH/6-1-5 | 6 | 39 | 21 | NP | | 35 | | | | Soft gray **silty CLAY**, interlayered with organic clayey **SILT AND PEAT**, occ. f sand seams, very moist | | |
| | | | | | | | | -27 | | | | 38.0 | Silty CLAY/SILT & PEAT/ALLUVIAL | | |
| SS 8 | 1.5 | 1.5 | WR/6-10-11 | 21 | | | | | 40 | | | | Dense gray **f SAND**, little silt, tr. peat partings, wet | | |
| SS 9 | 1.5 | N/R | 4-6-8 | 14 | | | | | 45 | | | | No Recovery | | 6' of run-up at depth 44' |
| SS 10 | 1.5 | 1.5 | 4-4-12 | 16 | | | | | 50 | | | | Medium dense gray f SAND, some silt, tr. mica, wet | | |
| SS 11 | 1.5 | 1.5 | 13-9-11 | 20 | | | | | 55 | | | | Medium dense gray, greenish-gray f-m SAND, little silt, tr. mica, wet | | |
| SS 12 | 1.5 | 1.5 | WH/6-1-2 | 3 | | | | -49 | 60 | | | 60.5 | --, very loose<br>SAND/ALLUVIAL | | 20' of run-up at depth 59' |
| | | | | | | | | | | | | | Boring Terminated at 60.5'<br>Notes:<br>1. Monitoring Well no. 1 set in borehole offset 6' south from Boring B92-1.<br>ADDITIONAL WATER LEVEL READINGS<br>DATE — DEPTH BELOW WELL COVER TO TOP OF WATER (Ft)<br>6-1-92 — 6.6 | | |

HALEY & ALDRICH, INC.
Bethesda, Maryland

BORING NO. B92-1



# TEST BORING LOG

| Job Number | Client/Project | Sheet No. | Boring No. |
|---|---|---|---|
| 65190-00 | David Volkert & Associates, Inc.<br>Martin Luther King Freeway Extension | 1 of 2 | B92-2 |
| **Project Location** | | **Logged** | |
| Portsmouth, Virginia | | Harvey Beaulieu | |

SAMPLE LEGEND:
- NR = Sample Not Recovered
- SS = Standard Penetration Split Spoon Sample
- ST = Pushed Shelby Tube
- B = Disturbed Bag Sample
- LL = Liquid Limit
- PI = Plasticity Index
- AC = Auger Cutting

| Start | Finish | Driller/Subcontractor | Drill Make & Model | Total Depth (ft) |
|---|---|---|---|---|
| Time: 11:35am<br>Date: 3-30-92 | Time: 1:30pm<br>Date: 3-30-92 | Richard Stallings<br>VDH&T | CME 45 ATV | 60.5 |

| Water Level Observations Date | Time | Boring Depth(ft) | Casing Depth(ft) | Caved Depth(ft) | Water Depth(ft) |
|---|---|---|---|---|---|
| 3-30-92 | 11:45am | 5.5 | N/A | N/A | 5.0 |
| 3-30-92 | 2:02pm | 60.5 | N/A | 6.8 | 6.5 |

| SAMPLE TYPE | SAMP. ADV. CORE LENG. (ft) | SAMPLE REC. CORE REC. (ft) | SAMPLE BLOWS/CORE RECOVERY RQD | N" VALUE BLOWS/FOOT | LAB TESTS: MOISTURE CONTENT (%) | LL | PI | ELEV. (ft) +1 | DEPTH (ft) | GRAPHICS | SAMPLE | STRATA DEPTH (ft) | DESCRIPTION AND CLASSIFICATION | WELL | REMARKS |
|---|---|---|---|---|---|---|---|---|---|---|---|---|---|---|---|
| | | | | | | | | 10.6 | | | | | | | |
| SS 1 | 1.5 | 1.5 | 2-1-2 | 3 | 12 | 13 | 3 | 10 | | | | 0.3 | 4" TOPSOIL | | Qp 1-1.5 tsf |
| | | | | | | | | 9 | | | | 2.0 | Very loose light brown-gray f-m SAND AND **SILT & CLAY**, (3" CLAY & SILT , little f sand) layer at bottom of spoon, tr. roots, moist<br>SAND/SILT & CLAY/ALLUVIAL | | |
| SS 2 | 1.5 | 1.5 | 1-2-4 | 6 | | | | | 5 | | | | Loose gray, orange-brown f-m SAND, tr. silt, moist to wet | | |
| SS 3 | 1.5 | 1.5 | 7-6-3 | 9 | | | | | 10 | | | | Medium dense yellow-tan, gray f SAND, little silt, wet | | |
| SS 4 | 1.5 | 1.5 | 1-4-6 | 10 | 15 | | | | 15 | | | | --, gray below 15.5' | | |
| SS 5 | 1.5 | 1.5 | 1-4-3 | 7 | | | | -9 | 20 | | | 20.0 | Loose gray, tr. yellow-brown f-m SAND, tr. silt, tr. f gravel, wet<br>SAND/ALLUVIAL | | Qp = 1 tsf<br>Shelby tube pushed 21'-23' in B92-2A, 24" rec. |
| SS 6 | 1.5 | 1.5 | WR/6-WH/6-2 | 2 | | | | | 25 | | | | Medium soft brown **PEAT AND** organic **CLAY & SILT**, little decomposed wood fragments up to 1", moist<br>--, soft, tr. mica, tr. f sand seams | | Qp < 0.5 tsf<br>Shelby tube 25'-27' in B92-2A, 24" rec. |
| | | | | | | | | -16 | | | | 27.0 | PEAT/CLAY & SILT/ALLUVIAL | | |

HALEY & ALDRICH, INC.
Bethesda, Maryland

BORING NO. B92-2

# TEST BORING LOG

Job Number: 65190-00
Client/Project: David Volkert & Associates, Inc. — Martin Luther King Freeway Extension
Sheet No.: 2 of 2
Boring No.: B92-2
Project Location: Portsmouth, Virginia
Logged: Harvey Beaulieu

| SAMPLE TYPE | SAMP. ADV. CORE LENG. (ft) | SAMPLE REC. CORE REC. (ft) | SAMPLE BLOWS %CORE RECOVERY RQD | N" VALUE BLOWS/FOOT | LAB TESTS MOISTURE CONTENT(%) | LL | PI | ELEV. (ft) ±1 | DEPTH (ft) | GRAPHICS | SAMPLE | STRATA DEPTH (ft) | DESCRIPTION AND CLASSIFICATION | WELL | REMARKS |
|---|---|---|---|---|---|---|---|---|---|---|---|---|---|---|---|
| SS 7 | 1.5 | 1.5 | WR/6-1-6 | 7 | 37 | 25 | NP | | 30 | | | | Soft gray-brown, **clayey SILT**, some f sand, little peat seams, tr. mica, moist | | Qp < 0.5 tsf |
| | | | | | | | | -21 | | | | 32.0 | clayey SILT/ALLUVIAL | | |
| SS 8 | 1.5 | 1.5 | 3-14-24 | 38 | | | | | 35 | | | | Dense gray f SAND, tr. silt, tr. mica, tr. decomposed wood, moist | | 10' run-up at depth 34' |
| SS 9 | 1.5 | 0.5 | 1-4-9 | 13 | | | | | 40 | | | | Medium dense gray m-f SAND, tr. silt, wet | | 5' run-up at depth 39' |
| SS 10 | 1.5 | 0.5 | 4-9-10 | 19 | 28 | | | | 45 | | | | --, dense, f-m SAND | | |
| SS 11 | 1.5 | 1.5 | 2-6-12 | 18 | | | | | 50 | | | | --, tr. mica, tr. peat partings/seams | | |
| SS 12 | 1.5 | 1.5 | 3-4-8 | 12 | | | | | 55 | | | | Loose gray f-m SAND, little peat seams, tr. silt, tr. mica, occ. layers (f sand and silt), very moist | | |
| SS 13 | 1.5 | 1.5 | 1-3-4 | 7 | | | | -49 | 60 | | | | -- very loose, tr. peat | | |
| | | | | | | | | -50 | | | | 60.0 | SAND/ALLUVIAL | | |
| | | | | | | | | | | | | 60.5 | Very soft light gray **silty CLAY to CLAY**, tr. f sand, tr. peat, very plastic, moist | | Qp < 0.25 tsf |
| | | | | | | | | | | | | | CLAY/ALLUVIAL | | |

Boring Terminated at 60.5'
Notes:
1. Shelby tubes pushed in boring B92-2A offset approx. 10' from B92-2.

HALEY & ALDRICH, INC.
Bethesda, Maryland

BORING NO. B92-2



# TEST BORING LOG

Job Number: 65190-00
Client/Project: David Volkert & Associates, Inc. — Martin Luther King Freeway Extension
Sheet No.: 1 of 2
Boring No.: B92-2A
Project Location: Portsmouth, Virginia
Logged: Harvey Beaulieu

SAMPLE LEGEND:
NR = Sample Not Recovered
SS = Standard Penetration Split Spoon Sample
ST = Pushed Shelby Tube
B = Disturbed Bag Sample
LL = Liquid Limit
PI = Plasticity Index
AC = Auger Cutting

Start: Time: 8:45am Date: 4-8-92
Finish: Time: 10:00am Date: 4-8-92
Driller/Subcontractor: Richard Stallings VDH&T
Drill Make & Model: CME 45 ATV
Total Depth (ft): 27.0

Water Level Observations

| Date | Time | Boring Depth(ft) | Casing Depth(ft) | Caved Depth(ft) | Water Depth(ft) |
|---|---|---|---|---|---|
| | | | | | |
| | | | | | |
| | | | | | |

| SAMPLE TYPE | SAMP. ADV. CORE LENG. (ft) | SAMPLE REC. CORE REC. (ft) | SAMPLE BLOWS %CORE RECOVERY RQD | N" VALUE BLOWS/FOOT | LAB TESTS MOISTURE CONTENT(%) | LL | PI | ELEV. (ft) ±1 | DEPTH (ft) | GRAPHICS | SAMPLE | STRATA DEPTH (ft) | DESCRIPTION AND CLASSIFICATION | WELL | REMARKS |
|---|---|---|---|---|---|---|---|---|---|---|---|---|---|---|---|
| | | | | | | | | 10.6 | | | | | | | |
| | | | | | | | | 9 | 5 | | | 2.0 | SAND/SILT & CLAY/ALLUVIAL | | |
| ST 1 | 2.0 | 2.0 | P | P | | | | -9 | 20 | | | 20.0 | SAND/ALLUVIAL | | |
| ST 2 | 2.0 | 2.0 | P | P | | | | -16 | 25 | | | 27.0 | Soft brown **PEAT AND organic CLAY & SILT**, moist | | |
| | | | | | | | | | | | | | Gray-brown clayey SILT AND PEAT, moist | | |

Boring Terminated at 27'
Notes:
1. Stratigraphic contact depths are from

HALEY & ALDRICH, INC.
Bethesda, Maryland

BORING NO. B92-2A

# TEST BORING LOG

| Job Number | Client/Project | Sheet No. | Boring No. |
|---|---|---|---|
| 65190-00 | David Volkert & Associates, Inc.<br>Martin Luther King Freeway Extension | 2 of 2 | B92-2A |
| Project Location: Portsmouth, Virginia | | Logged: Harvey Beaulieu | |

| SAMPLE TYPE | SAMP. ADV. / CORE LENG. (ft) | SAMPLE REC. / CORE REC. (ft) | SAMPLE BLOWS / %CORE RECOVERY RQD | N" VALUE BLOWS/FOOT | LAB TESTS: MOISTURE CONTENT (%) | LL | PI | ELEV. (ft) +1 | DEPTH (ft) | GRAPHICS SAMPLE | STRATA DEPTH (ft) | DESCRIPTION AND CLASSIFICATION | WELL | REMARKS |
|---|---|---|---|---|---|---|---|---|---|---|---|---|---|---|
| | | | | | | | | | | | | boring B92-2 offset approximately 10' from B92-2A. | | |

HALEY & ALDRICH, INC.
Bethesda, Maryland

BORING NO. B92-2A



# TEST BORING LOG

| Job Number | Client/Project | Sheet No. | Boring No. |
|---|---|---|---|
| 65190-00 | David Volkert & Associates, Inc.<br>Martin Luther King Freeway Extension | 1 of 2 | B92-3 |
| Project Location: Portsmouth, Virginia | | Logged: Harvey Beaulieu | |

SAMPLE LEGEND:
NR = Sample Not Recovered
SS = Standard Penetration Split Spoon Sample
ST = Pushed Shelby Tube
B = Disturbed Bag Sample
LL = Liquid Limit
PI = Plasticity Index
AC = Auger Cutting

| Start | Finish | Driller/Subcontractor | Drill Make & Model | Total Depth (ft) |
|---|---|---|---|---|
| Time: 9:19am<br>Date: 3-30-92 | Time: 10.48am<br>Date: 3-30-92 | Richard Stallings<br>VDH&T | CME 45 ATV | 60.5 |

| Water Level Observations: Date | Time | Boring Depth(ft) | Casing Depth(ft) | Caved Depth(ft) | Water Depth(ft) |
|---|---|---|---|---|---|
| 3-30-92 | 9:38am | 10.5 | N/A | N/A | 7.0 |
| 3-30-92 | 11:08am | 60.5 | N/A | 14.0 | 6.7 |
| 4-7-92 | 5:18pm | 11.5* | 11.5* | N/A | 7.0* |
| 6-1-92 | no data | 11.5* | 11.5* | N/A | 7.6* |

| SAMPLE TYPE | SAMP. ADV. / CORE LENG. (ft) | SAMPLE REC. / CORE REC. (ft) | SAMPLE BLOWS / %CORE RECOVERY RQD | N" VALUE BLOWS/FOOT | LAB TESTS: MOISTURE CONTENT (%) | LL | PI | ELEV. (ft) +1 | DEPTH (ft) | GRAPHICS SAMPLE | STRATA DEPTH (ft) | DESCRIPTION AND CLASSIFICATION | WELL | REMARKS |
|---|---|---|---|---|---|---|---|---|---|---|---|---|---|---|
| | | | | | | | | 10.4 | | | | | | |
| SS 1 | 1.5 | 1.5 | 6-8-8 | 16 | 6 | | | | | | | Dense tan-brown, brown f-m SAND, tr. silt, moist | | *-marked water level readings are from well no. 3 |
| SS 2 | 1.5 | 1.5 | WR/6-2-3 | 5 | | | | | 5 | | | Loose yellow-tan, brown, gray f SAND, tr. to little silt, moist | | |
| SS 3 | 1.5 | 1.5 | 5-3-3 | 6 | | | | | 10 | | | Loose gray, tan f-m SAND, tr. silt, wet | | |
| SS 4 | 1.5 | 1.5 | 3-3-2 | 5 | | | | | 15 | | | --, gray f SAND | | |
| SS 5 | 1.5 | 1.5 | 1-3-3 | 6 | | | | -10 | 20 | | 20.0 | --, gray f-m SAND, tr. silt<br>SAND/ALLUVIAL | | |
| | | | | | | | | | | | | Soft olive-brown PEAT AND CLAY & SILT, very moist | | Qp = 0.5 tsf |
| SS 6 | 1.5 | 1.5 | 1-2-3 | 5 | 50 | 69 | NP | | 25 | | | Medium stiff brown PEAT AND CLAY & SILT, occasional f sand layers up to 2", tr. decomposed wood fragments up to 2", moist | | Qp = 1 tsf |
| | | | | | | | | -17 | | | 27.0 | PEAT/CLAY & SILT/ALLUVIAL-MARSH | | |

HALEY & ALDRICH, INC.
Bethesda, Maryland

BORING NO. B92-3

# TEST BORING LOG

Job Number: 65190-00
Client/Project: David Volkert & Associates, Inc. — Martin Luther King Freeway Extension
Sheet No.: 2 of 2
Boring No.: B92-3
Project Location: Portsmouth, Virginia
Logged: Harvey Beaulieu

| SAMPLE TYPE | SAMP. ADV. CORE LENG. (ft) | SAMPLE REC. CORE REC. (ft) | SAMPLE BLOWS /CORE RECOVERY RQD | N" VALUE BLOWS/FOOT | LAB TESTS: MOISTURE CONTENT(%) | LL | PI | ELEV. (ft) ± | DEPTH (ft) | GRAPHICS | SAMPLE | STRATA DEPTH (ft) | DESCRIPTION AND CLASSIFICATION | WELL | REMARKS |
|---|---|---|---|---|---|---|---|---|---|---|---|---|---|---|---|
| SS 7 | 1.5 | 1.5 | 1-2-2 | 4 | 67 | 41 | 10 | | 30 | | | | Soft organic **silty CLAY**, some peat, little decomposed wood, tr. mica, moist | | Qp = 0.5 tsf |
| | | | | | | | | -22 | | | | 32.0 | silty CLAY/peat/ALLUVIAL-MARSH | | |
| SS 8 | 1.5 | 1.5 | 1-8-15 | 23 | | | | | 35 | | | | Dense gray f SAND, little silt, tr. peat, tr. mica, wet to very moist | | |
| SS 9 | 1.5 | 1.5 | 3-4-10 | 14 | | | | | 40 | | | | --, medium dense, gray, tr. to little silt, tr. peat partings/seams, tr. mica, moist | | 15' run-up at depth 39' |
| SS 10 | 1.5 | 1.5 | 2-7-14 | 21 | | | | | 45 | | | | Medium dense gray f SAND, some silt, tr. mica, tr. peat, very moist | | |
| SS 11 | 1.5 | 1.5 | 7-8-8 | 16 | | | | | 50 | | | | --, little peat seams | | 10' run-up at depth 49' |
| SS 12 | 1.5 | 1.5 | 3-5-3 | 8 | | | | -45 | 55 | | | 55.0 | Loose gray f SAND AND SILT, some peat seams, tr. mica, moist<br>SAND/SILT/ALLUVIAL | | |
| SS 13 | 1.5 | 1.5 | WR/6-WH/12 | WH /12 | | | | -50 | 60 | | | 60.5 | Very soft gray silty CLAY, tr. peat, tr. mica, moist<br>CLAY/ALLUVIAL | | |
| | | | | | | | | | | | | | Boring Terminated at 60.5'<br>Notes:<br>1. Monitoring Well no. 3 placed in borehole offset 23' NE from B92-3. | | |

HALEY & ALDRICH, INC.
Bethesda, Maryland

BORING NO. B92-3



# TEST BORING LOG

Job Number: 65190-00
Client/Project: David Volkert & Associates, Inc. — Martin Luther King Freeway Extension
Sheet No.: 1 of 2
Boring No.: B92-4
Project Location: Portsmouth, Virginia
Logged: Harvey Beaulieu

SAMPLE LEGEND:
- NR = Sample Not Recovered
- SS = Standard Penetration Split Spoon Sample
- ST = Pushed Shelby Tube
- B = Disturbed Bag Sample
- LL = Liquid Limit
- PI = Plasticity Index
- AC = Auger Cutting

Start: Time: 11:00am Date: 3-27-92
Finish: Time: 12:16pm Date: 3-27-92
Driller/Subcontractor: Richard Stallings, VDH&T
Drill Make & Model: CME 45 ATV
Total Depth (ft): 60.5

| Water Level Observations Date | Time | Boring Depth(ft) | Casing Depth(ft) | Caved Depth(ft) | Water Depth(ft) |
|---|---|---|---|---|---|
| 3-27-92 | 11:04am | 5.5 | N/A | N/A | 2.5 |
| 3-27-92 | 12:38pm | 60.5 | N/A | 4.0 | 3.5 |

| SAMPLE TYPE | SAMP. ADV. CORE LENG. (ft) | SAMPLE REC. CORE REC. (ft) | SAMPLE BLOWS /CORE RECOVERY RQD | N" VALUE BLOWS/FOOT | LAB TESTS: MOISTURE CONTENT(%) | LL | PI | ELEV. (ft) ± | DEPTH (ft) | GRAPHICS | SAMPLE | STRATA DEPTH (ft) | DESCRIPTION AND CLASSIFICATION | WELL | REMARKS |
|---|---|---|---|---|---|---|---|---|---|---|---|---|---|---|---|
| | | | | | | | | 11.5 | 11 | | | 0.5 | Gray f-c GRAVEL up to 1", slightly moist<br>FILL | | |
| SS 1 | 1.5 | 0.5 | WR/6-1-1 | 2 | 18 | | | | 5 | | | | Very loose gray f-m SAND, tr. silt, wet | | |
| SS 2 | 1.5 | 1.5 | WR/6-1-5 | 6 | | | | | 10 | | | | --, loose, tr. to little silt | | |
| SS 3 | 1.5 | 1.5 | WH/6-3-4 | 7 | | | | | 15 | | | | Loose gray f SAND, little silt, wet | | |
| SS 4 | 1.5 | 1.5 | 4-1-2 | 3 | | | | -8 | 20 | | | 20.0 | --, very loose f-m SAND, tr. silt<br>SAND/ALLUVIAL | | |
| | | | | | | | | | | | | | Soft brown, olive-brown organic SILT & CLAY, some peat, moist | | Shelby tube pushed 21'-23' in B92-4A, 16" rec. |
| SS 5 | 1.5 | 1.5 | WH/6-2-3 | 5 | 34 | 23 | NP | -15 | 25 | | | 27.0 | Medium stiff brown, olive-brown **PEAT**, some organic clayey silt, little decomposed wood fragments up to 1", moist<br>PEAT/SILT/CLAY/MARSH-ALLUVIAL | | Qp = 1 tsf |

HALEY & ALDRICH, INC.
Bethesda, Maryland

BORING NO. B92-4

# TEST BORING LOG

Job Number: 65190-00
Client/Project: David Volkert & Associates, Inc. — Martin Luther King Freeway Extension
Sheet No.: 2 of 2
Boring No.: B92-5
Project Location: Portsmouth, Virginia
Logged: Harvey Beaulieu

| SAMPLE TYPE | SAMP. ADV. CORE LENG. (ft) | SAMPLE REC. CORE REC. (ft) | SAMPLE BLOWS %CORE RECOVERY RQD | N" VALUE BLOWS/FOOT | LAB TESTS MOISTURE CONTENT (%) | LL | PI | ELEV. (ft) ± | DEPTH (ft) | GRAPHICS | SAMPLE | STRATA DEPTH (ft) | DESCRIPTION AND CLASSIFICATION | WELL | REMARKS |
|---|---|---|---|---|---|---|---|---|---|---|---|---|---|---|---|
| SS 7 | 1.5 | 1.5 | WH/6-2-3 | 5 | | | | | 30 | | | | Very soft brown, yellow-brown **PEAT AND organic CLAY & SILT** little decomposed wood fragments up to 2", moist | | Qp < 0.25 tsf |
| | | | | | | | | | | | | | | | Shelby tube pushed 31'-33' in B92-5A, no sample rec. |
| SS 8 | 1.5 | 1.5 | WR/6-WH/6-1 | 1 | 75 | 50 | 15 | | 35 | | | | Very soft brown, olive-brown **organic CLAY & SILT**, little peat, little (silt and f sand) layers up to 1", moist | | Shelby tube pushed 34'-36' in B92-5A, 19" rec. Qp < 0.25 tsf |
| | | | | | | | | -21 | | | | 37.0 | CLAY/SILT/peat/ALLUVIAL | | |
| SS 9 | 1.5 | 1.5 | WR/6-5-11 | 16 | | | | | 40 | | | | Very soft gray **silty CLAY** interlayered with f SAND, little silt layers 2"-4" thick, moist | | |
| | | | | | | | | -26 | | | | 42.0 | silty CLAY/SAND/ALLUVIAL | | |
| SS 10 | 1.5 | 1.5 | 1-8-12 | 20 | | | | | 45 | | | | Medium dense gray f SAND, little silt, tr. mica, moist | | |
| SS 11 | 1.5 | 1.5 | 1-4-8 | 12 | | | | | 50 | | | | -- | | 5' run-up at depth 49' |
| SS 12 | 1.5 | 1.5 | 5-4-8 | 12 | | | | | 55 | | | | --, little to some silt | | 3' run-up at depth 54' |
| SS 13 | 1.5 | 1.5 | 13-9-15 | 24 | | | | -45 | 60 | | | 60.5 | --, little silt, wet<br>SAND/ALLUVIAL | | 3' run-up at depth 59' |
| | | | | | | | | | | | | | Boring Terminated at 60.5'<br>Notes:<br>1. Monitoring Well no. 5 set in borehole offset 135' SE from boring B92-5.<br>2. Shelby tubes pushed in borehole B92-5A offset 15' ESE from Boring B92-5. | | |

HALEY & ALDRICH, INC.
Bethesda, Maryland

BORING NO. B92-5



# TEST BORING LOG

Job Number: 65190-00
Client/Project: David Volkert & Associates, Inc. — Martin Luther King Freeway Extension
Sheet No.: 1 of 2
Boring No.: B92-5A
Project Location: Portsmouth, Virginia
Logged: Harvey Beaulieu

SAMPLE LEGEND:
NR = Sample Not Recovered
SS = Standard Penetration Split Spoon Sample
ST = Pushed Shelby Tube
B = Disturbed Bag Sample
LL = Liquid Limit
PI = Plasticity Index
AC = Auger Cutting

| Start | Finish | Driller/Subcontractor | Drill Make & Model | Total Depth (ft) |
|---|---|---|---|---|
| Time: 8:45am Date: 4-7-92 | Time: 10:50am Date: 4-7-92 | Richard Stallings VDH&T | CME 45 ATV | 36.0 |

Water Level Observations

| Date | Time | Boring Depth(ft) | Casing Depth(ft) | Caved Depth(ft) | Water Depth(ft) |
|---|---|---|---|---|---|
| | | | | | |

| SAMPLE TYPE | SAMP. ADV. CORE LENG. (ft) | SAMPLE REC. CORE REC. (ft) | SAMPLE BLOWS %CORE RECOVERY RQD | N" VALUE BLOWS/FOOT | LAB TESTS MOISTURE CONTENT (%) | LL | PI | ELEV. (ft) ± | DEPTH (ft) | GRAPHICS | SAMPLE | STRATA DEPTH (ft) | DESCRIPTION AND CLASSIFICATION | WELL | REMARKS |
|---|---|---|---|---|---|---|---|---|---|---|---|---|---|---|---|
| | | | | | | | | 15.6 | | | | | | | |
| | | | | | | | | | 14 | | | 1.5 | FILL | | |
| | | | | | | | | | 12 | | | 4.0 | SAND/POSSIBLE FILL | | |
| | | | | | | | | | 5 | | | | | | |
| | | | | | | | | | 9 | | | 7.0 | CLAY/ALLUVIAL | | |
| | | | | | | | | | 10 | | | | | | |
| | | | | | | | | | 15 | | | | | | |
| | | | | | | | | | 20 | | | | | | |
| ST 1 | 2.0 | 1.0 | P | P | | | | -6 | | | | 22.0 | SAND/ALLUVIAL | | |
| | | | | | | | | | 25 | | | | Soft dark brown **PEAT AND organic CLAY & SILT**, tr. mica, tr. f sand, moist | | |

HALEY & ALDRICH, INC.
Bethesda, Maryland

BORING NO. B92-5A

# TEST BORING LOG

| Job Number | Client/Project | Sheet No. | Boring No. |
|---|---|---|---|
| 65190-00 | David Volkert & Associates, Inc.<br>Martin Luther King Freeway Extension | 2 of 2 | B92-5A |
| **Project Location** | | **Logged** | |
| Portsmouth, Virginia | | Harvey Beaulieu | |

| SAMPLE TYPE | SAMP. ADV. CORE LENG. (ft) | SAMPLE REC. CORE REC. (ft) | SAMPLE BLOWS %CORE RECOVERY RQD | N" VALUE BLOWS/FOOT | LAB TESTS: MOISTURE CONTENT (%) | LL | PI | ELEV. (ft) +1 | DEPTH (ft) | GRAPHICS | SAMPLE | STRATA DEPTH (ft) | DESCRIPTION AND CLASSIFICATION | WELL | REMARKS |
|---|---|---|---|---|---|---|---|---|---|---|---|---|---|---|---|
| ST | 2.0 | 0.4 | P | P | | | | | 30 | | | | | | |
| ST 2 | 2.0 | 1.6 | P | P | | | | | 35 | | | | Soft gray-brown **CLAY & SILT**, some peat, little f sand, tr. mica, very moist | | |
| | | | | | | | | -20 | | | | 36.0 | CLAY & SILT/PEAT/ALLUVIAL-MARSH | | |
| | | | | | | | | | | | | | Boring Terminated at 36.0'<br>Notes:<br>1. Stratigraphic contact depths are from boring B92-5 offset 15' NW from B92-5A. | | |



# TEST BORING LOG

| Job Number | Client/Project | Sheet No. | Boring No. |
|---|---|---|---|
| 65190-00 | David Volkert & Associates, Inc.<br>Martin Luther King Freeway Extension | 1 of 3 | B92-6 |
| **Project Location** | | **Logged** | |
| Portsmouth, Virginia | | Harvey Beaulieu | |

SAMPLE LEGEND:
- NR = Sample Not Recovered
- SS = Standard Penetration Split Spoon Sample
- ST = Pushed Shelby Tube
- B = Disturbed Bag Sample
- LL = Liquid Limit
- PI = Plasticity Index
- AC = Auger Cutting

| Start | Finish | Driller/Subcontractor | Drill Make & Model | Total Depth (ft) |
|---|---|---|---|---|
| Time: 11:02 am<br>Date: 3-25-92 | Time: 2:31 pm<br>Date: 3-25-92 | Richard Stallings<br>VDH&T | CME 45 ATV | 80.5 |

| Water Level Observations Date | Time | Boring Depth(ft) | Casing Depth(ft) | Caved Depth(ft) | Water Depth(ft) |
|---|---|---|---|---|---|
| 3-25-92 | 11:15am | 5.5 | N/A | N/A | 3.0 |
| 3-25-92 | 3:11pm | 80.5 | N/A | 4.0 | 3.4 |

| SAMPLE TYPE | SAMP. ADV. CORE LENG. (ft) | SAMPLE REC. CORE REC. (ft) | SAMPLE BLOWS %CORE RECOVERY RQD | N" VALUE BLOWS/FOOT | LAB TESTS: MOISTURE CONTENT (%) | LL | PI | ELEV. (ft) +1 | DEPTH (ft) | GRAPHICS | SAMPLE | STRATA DEPTH (ft) | DESCRIPTION AND CLASSIFICATION | WELL | REMARKS |
|---|---|---|---|---|---|---|---|---|---|---|---|---|---|---|---|
| SS 1 | 1.5 | 1.5 | 4-7-6 | 13 | 14 | | | 13.7 | | | | 1.0 | Medium dense dark gray-brown f-m SAND, tr. f gravel, tr. silt | | |
| | | | | | | | | 11 | | | | 3.0 | FILL/<br>Medium dense dark gray-brown f-m SAND AND clayey SILT, moist<br>POSSIBLE FILL | | |
| SS 2 | 1.5 | 0.5 | WH/6-3-5 | 8 | 20 | | | | 5 | | | | Medium dense gray-tan f-m SAND, tr. silt, wet | | |
| SS 3 | 1.5 | 0.7 | 2-5-6 | 11 | | | | | 10 | | | | | | |
| | | | | | | | | 2 | | | | 12.0 | SAND/ALLUVIAL | | |
| SS 4 | 1.5 | 1.5 | 1-5-6 | 11 | | | | | 15 | | | | Medium dense gray f SAND AND SILT, tr. shell fragments, wet | | |
| SS 5 | 1.5 | 1.5 | 1-2-1 | 3 | 68 | | | | | | | | Very loose gray f-m SAND, little silt, tr. shell fragments, wet | | |
| | | | | | | | | -7 | 20 | | | 20.2 | SAND/silt/ALLUVIAL | | |
| | | | | | | | | | | | | | Very soft gray silty CLAY, moist | | Qp < 0.25 tsf |
| SS 6 | 1.5 | 1.5 | 1-1-1 | 2 | | | | | 25 | | | | Very soft gray silty CLAY, tr. shell fragments, moist | | Qp < 0.25 tsf<br>Shelby tube pushed 24'-26' in B92-6A, 10" rec. |

# TEST BORING LOG

Job Number: 65190-00
Client/Project: David Volkert & Associates, Inc. — Martin Luther King Freeway Extension
Sheet No.: 2 of 3
Boring No.: B92-6
Project Location: Portsmouth, Virginia
Logged: Harvey Beaulieu

| SAMPLE TYPE | SAMP. ADV. CORE LENG. (ft) | SAMPLE REC. CORE REC. (ft) | SAMPLE BLOWS / %CORE RECOVERY RQD | N" VALUE BLOWS/FOOT | LAB TESTS: MOISTURE CONTENT (%) | LL | PI | ELEV. (ft) ± | DEPTH (ft) | GRAPHICS | SAMPLE | STRATA DEPTH (ft) | DESCRIPTION AND CLASSIFICATION | WELL | REMARKS |
|---|---|---|---|---|---|---|---|---|---|---|---|---|---|---|---|
| SS 7 | 1.5 | 1.5 | 1-2-2 | 4 | | | | -18 | 30 | | | | --, tr. (f sand and silt) partings/seams, tr. mica | | Qp < 0.25 tsf |
| | | | | | | | | | | | | 32.0 | silty CLAY/ALLUVIAL | | |
| SS 8 | 1.5 | 1.5 | 2-4-5 | 9 | | | | | 35 | | | | Soft dark brown, gray-brown **PEAT AND** organic clayey **SILT**, little f decomposed wood fragments up to 3/4", moist | | Qp < 0.5 tsf |
| SS 9 | 1.5 | 1.5 | 2-5-4 | 9 | | | | | 40 | | | | --, AND organic SILT & CLAY, little wood fragments up to 2" | | Shelby tube pushed 41'-43' in B92-6A, 24" rec. |
| SS 10 | 1.5 | 1.5 | 1-1-4 | 5 | | | | -33 | 45 | | | | Very soft gray-brown organic **CLAY & SILT AND PEAT**, little decomposed wood fragments, occasional f sand seams, very moist | | Qp < 0.5 tsf |
| | | | | | | | | | | | | 47.0 | PEAT/CLAY/SILT/MARSH-ALLUVIAL | | |
| SS 11 | 1.5 | 1.5 | WR/6-2-5 | 7 | | | | | 50 | | | | Very loose gray f SAND, little silt, tr. peat, wet | | |
| SS 12 | 1.5 | 1.5 | 2-6-11 | 17 | | | | | 55 | | | | --, medium dense, moist | | |
| SS 13 | 1.5 | 1.5 | WR/6-5-10 | 15 | 55 | | | | 60 | | | | --, medium dense, some silt, tr. peat, moist | | |
| | | | | | | | | -49 | | | | 63.0 | SAND/silt/ALLUVIAL | | |
| SS 14 | 1.5 | 1.5 | WH/6-3-4 | 7 | 28 | 20 | 3 | | 65 | | | | Medium stiff gray to light gray **CLAY**, sticky, 6" layer of f **SAND AND SILT**, wet to moist | | Qp = 1 tsf |

HALEY & ALDRICH, INC.
Bethesda, Maryland

BORING NO. B92-6



# TEST BORING LOG

Job Number: 65190-00
Client/Project: David Volkert & Associates, Inc. — Martin Luther King Freeway Extension
Sheet No.: 3 of 3
Boring No.: B92-6
Project Location: Portsmouth, Virginia
Logged: Harvey Beaulieu

| SAMPLE TYPE | SAMP. ADV. CORE LENG. (ft) | SAMPLE REC. CORE REC. (ft) | SAMPLE BLOWS / %CORE RECOVERY RQD | N" VALUE BLOWS/FOOT | LAB TESTS: MOISTURE CONTENT (%) | LL | PI | ELEV. (ft) ± | DEPTH (ft) | GRAPHICS | SAMPLE | STRATA DEPTH (ft) | DESCRIPTION AND CLASSIFICATION | WELL | REMARKS |
|---|---|---|---|---|---|---|---|---|---|---|---|---|---|---|---|
| | | | | | | | | | | | | | | | 5'-7' run-up at depths 64'-67' in B92-5A precluded shelby tube |
| SS 15 | 1.5 | 1.5 | WH/6-1-2 | 3 | | | | -58 | 70 | | | | Very soft gray **silty CLAY**, sticky, moist; one 2" by 1" diameter pocket of light gray CLAY & SILT, well cemented, dry | | |
| | | | | | | | | | | | | 72.0 | silty CLAY/ALLUVIAL | | |
| SS 16 | 1.5 | 1.5 | 3-4-7 | 11 | | | | | 75 | | | | Loose dark gray f SAND AND SILT, tr. peat, tr. shell fragments, moist | | |
| SS 17 | 1.5 | 1.5 | 10-4-4 | 8 | | | | -67 | 80 | | | 80.5 | Very loose gray f-m SAND AND SILT, occasional 2" layers (c-f sand and f rounded quartz gravel up to 3/8"), wet | | 5' run-up at depth 79' |
| | | | | | | | | | | | | | SAND/SILT/ALLUVIAL | | |

Boring Terminated at 80.5'

Notes:
1. Shelby tubes pushed in boring B92-6A offset 5' SW from B92-6.

HALEY & ALDRICH, INC.
Bethesda, Maryland

BORING NO. B92-6

# TEST BORING LOG

| Job Number | Client/Project | Sheet No. | Boring No. |
|---|---|---|---|
| 65190-00 | David Volkert & Associates, Inc.<br>Martin Luther King Freeway Extension | 1 of 2 | B92-6A |

Project Location: Portsmouth, Virginia

Logged: Harvey Beaulieu

SAMPLE LEGEND:
- NR = Sample Not Recovered
- SS = Standard Penetration Split Spoon Sample
- ST = Pushed Shelby Tube
- B = Disturbed Bag Sample
- LL = Liquid Limit
- PI = Plasticity Index
- AC = Auger Cutting

| Start | Finish | Driller/Subcontractor | Drill Make & Model | Total Depth (ft) |
|---|---|---|---|---|
| Time: 11:20am<br>Date: 4-7-92 | Time: 2:45pm<br>Date: 4-7-92 | Richard Stallings<br>VDH&T | CME 45 ATV | 67.0 |

| Water Level Observations | | | | | |
|---|---|---|---|---|---|
| Date | Time | Boring Depth(ft) | Casing Depth(ft) | Caved Depth(ft) | Water Depth(ft) |
| | | | | | |
| | | | | | |
| | | | | | |

| SAMPLE TYPE | SAMP. ADV. (ft) CORE LENG. | SAMPLE REC. (ft) CORE REC. | SAMPLE BLOWS %CORE RECOVERY RQD | N" VALUE BLOWS/FOOT | LAB TESTS: MOISTURE CONTENT(%) | LL | PI | ELEV. (ft) +1 | DEPTH (ft) | GRAPHICS SAMPLE | STRATA DEPTH (ft) | DESCRIPTION AND CLASSIFICATION | WELL | REMARKS |
|---|---|---|---|---|---|---|---|---|---|---|---|---|---|---|
| | | | | | | | | 13.7 | | | | | | |
| | | | | | | | | 13 | | | 1.0 | FILL | | |
| | | | | | | | | 11 | | | 3.0 | SAND/SILT/POSS. FILL | | |
| | | | | | | | | | 5 | | | | | |
| | | | | | | | | 10 | | | | | | |
| | | | | | | | | 2 | | | 12.0 | SAND/ALLUVIAL | | |
| | | | | | | | | | 15 | | | | | |
| | | | | | | | | -7 | 20 | | 20.2 | SAND/silt/ALLUVIAL | | |
| ST 1 | 2.0 | 0.8 | P | P | | | | | | | | Soft gray silty **CLAY**, tr. mica, moist | | |
| | | | | | | | | | 25 | | | | | |
| | | | | | | | | | 30 | | | | | |
| | | | | | | | | -18 | | | 32.0 | silty CLAY/ALLUVIAL | | |

HALEY & ALDRICH, INC.
Bethesda, Maryland

BORING NO. B92-6A



# TEST BORING LOG

| Job Number | Client/Project | Sheet No. | Boring No. |
|---|---|---|---|
| 65190-00 | David Volkert & Associates, Inc.<br>Martin Luther King Freeway Extension | 2 of 2 | B92-6A |

Project Location: Portsmouth, Virginia

Logged: Harvey Beaulieu

| SAMPLE TYPE | SAMP. ADV. (ft) CORE LENG. | SAMPLE REC. (ft) CORE REC. | SAMPLE BLOWS %CORE RECOVERY RQD | N" VALUE BLOWS/FOOT | LAB TESTS: MOISTURE CONTENT(%) | LL | PI | ELEV. (ft) +1 | DEPTH (ft) | GRAPHICS SAMPLE | STRATA DEPTH (ft) | DESCRIPTION AND CLASSIFICATION | WELL | REMARKS |
|---|---|---|---|---|---|---|---|---|---|---|---|---|---|---|
| | | | | | | | | | 35 | | | | | |
| ST 2 | 2.0 | 2.0 | P | P | | | | | | | | Soft brown, gray-brown **PEAT AND organic CLAY & SILT**, little decomposed wood fragments up to 3/4", tr. mica, v. moist | | |
| | | | | | | | | | 40 | | | | | |
| | | | | | | | | -33 | 45 | | 47.0 | PEAT/CLAY/SILT/MARSH-ALLUVIAL | | |
| | | | | | | | | | 50 | | | | | |
| | | | | | | | | | 55 | | | | | |
| | | | | | | | | | 60 | | | | | |
| | | | | | | | | -49 | 65 | | 63.0 | SAND/ALLUVIAL | | |
| | | | | | | | | -53 | | | 67.0 | 6' run-up encountered at depth 64', 5' run-up encountered after washing out augers; HSA drilled to 67', 7' run-up encountered, which was washed out; 5' run-up encountered during next attempt; No more attempts made for Shelby tube.<br>silty CLAY/ALLUVIAL | | |

Boring Terminated at 67'

Notes:
1. Stratigraphic contact depths are from boring B92-6 offset 5' NE from B92-6A.

HALEY & ALDRICH, INC.
Bethesda, Maryland

BORING NO. B92-6A

# TEST BORING LOG

| Job Number | Client/Project | Sheet No. | Boring No. |
|---|---|---|---|
| 65190-00 | David Volkert & Associates, Inc.<br>Martin Luther King Freeway Extension | 1 of 2 | B92-7 |

Project Location: Portsmouth, Virginia

Logged: Harvey Beaulieu

SAMPLE LEGEND:
- NR = Sample Not Recovered
- SS = Standard Penetration Split Spoon Sample
- ST = Pushed Shelby Tube
- B = Disturbed Bag Sample
- LL = Liquid Limit
- PI = Plasticity Index
- AC = Auger Cutting

| Start | Finish | Driller/Subcontractor | Drill Make & Model | Total Depth (ft) |
|---|---|---|---|---|
| Time: 9:11am<br>Date: 3-25-92 | Time: 10:14am<br>Date: 3-25-92 | Richard Stallings<br>VDH&T | CME 45 ATV | 60.5 |

Water Level Observations

| Date | Time | Boring Depth(ft) | Casing Depth(ft) | Caved Depth(ft) | Water Depth(ft) |
|---|---|---|---|---|---|
| 3-25-92 | 9:15am | 5.5 | N/A | N/A | 3.0 |
| 3-25-92 | 10:40am | 60.5 | N/A | 4.0 | 3.2 |
| 4-2-92 | 11:00am | 60.5 | N/A | 3.5 | 3.0 |
| 4-7-92 | 3:45pm | 11.5* | 10.5* | N/A | 3.1* |

| SAMPLE TYPE | SAMP. ADV. CORE LENG. (ft) | SAMPLE REC. CORE REC. (ft) | SAMPLE BLOWS /CORE RECOVERY RQD | N" VALUE BLOWS/FOOT | LAB TESTS: MOISTURE CONTENT (%) | LL | PI | ELEV. (ft) +1 | DEPTH (ft) | GRAPHICS | SAMPLE | STRATA DEPTH (ft) | DESCRIPTION AND CLASSIFICATION | WELL | REMARKS |
|---|---|---|---|---|---|---|---|---|---|---|---|---|---|---|---|
| SS 1 | 1.5 | 1.5 | 1-2-2 | 4 | 17 | | | 12.2 | | | | | Loose brown, gray-brown f-m SAND, some silt, tr. roots, moist | | *-marked water level readings are from well no. 7. Additional water readings are shown on the last B92-7 log sheet. |
| SS 2 | 1.5 | 0.5 | WH/9-1/3"-3 | 4 | | | | | 5 | | | | Very loose gray, tan-gray f-m SAND, tr. silt, wet | | |
| SS 3 | 1.5 | 1.0 | WH/6-3-2 | 5 | | | | | 10 | | | | Loose gray f SAND, some silt, wet | | |
| SS 4 | 1.5 | 1.5 | 2-7-8 | 15 | | | | | 15 | | | | Medium dense gray f SAND, some silt, very moist to wet | | |
| SS 5 | 1.5 | 1.5 | WR/6-1-1 | 2 | | | | -8 | 20 | | | 20.3 | --, very loose<br>SAND/silt/ALLUVIAL | | |
| SS 6 | 1.5 | 1.5 | WH/12-1 | 1 | 65 | 44 | 22 | | 25 | | | | Soft gray **silty CLAY**, moist<br>Very soft gray **silty CLAY**, moist | | Qp < 0.25 tsf<br>Qp < 0.25 tsf |



# TEST BORING LOG

| Job Number | Client/Project | Sheet No. | Boring No. |
|---|---|---|---|
| 65190-00 | David Volkert & Associates, Inc.<br>Martin Luther King Freeway Extension | 2 of 2 | B92-7 |

Project Location: Portsmouth, Virginia

Logged: Harvey Beaulieu

| SAMPLE TYPE | SAMP. ADV. CORE LENG. (ft) | SAMPLE REC. CORE REC. (ft) | SAMPLE BLOWS /CORE RECOVERY RQD | N" VALUE BLOWS/FOOT | LAB TESTS: MOISTURE CONTENT (%) | LL | PI | ELEV. (ft) +1 | DEPTH (ft) | GRAPHICS | SAMPLE | STRATA DEPTH (ft) | DESCRIPTION AND CLASSIFICATION | WELL | REMARKS |
|---|---|---|---|---|---|---|---|---|---|---|---|---|---|---|---|
| SS 7 | 1.5 | 1.5 | WR/6-WH/12 | WH/12 | | | | | 30 | | | | -- gray, brown gray, tr. f peat fragments, tr. f mica grains | | |
| SS 8 | 1.5 | 1.5 | WH/6-2-4 | 6 | | | | -23 | 35 | | | 35.0 | Very soft gray **silty CLAY**, tr. peat, moist<br>silty CLAY/ALLUVIAL | | |
| | | | | | | | | | | | | | Soft brown PEAT, some organic silt, tr. f decomposed wood fragments, moist | | |
| SS 9 | 1.5 | 1.5 | WH/6-2-4 | 6 | | | | | 40 | | | | --, stiff, little decomposed wood fragments up to 3/4" thick | | Qp 1-1.5 tsf |
| SS 10 | 1.5 | 1.5 | WH/6-4-7 | 11 | | | | -36 | 45 | | | 48.0 | Soft brown PEAT AND organic **CLAY & SILT**, tr. f decomposed wood fragments, moist<br>PEAT/CLAY/SILT/MARSH-ALLUVIAL | | Qp 0.5 tsf |
| SS 11 | 1.5 | 1.5 | WH/18 | WH/12 | | | | -40 | 50 | | | 52.0 | Very loose gray, gray-brown **f-m SAND**, little silt, tr. f mica grains, tr. peat, occasional (f sand some silt) seams, moist<br>SAND/ALLUVIAL | | |
| SS 12 | 1.5 | 1.5 | 1-4-5 | 9 | 29 | | | -46 | 55 | | | 58.0 | Soft gray-brown **CLAY & SILT**, some peat partings/seams, little f sand partings, tr. mica, moist<br>CLAY/SILT/peat/ALLUVIAL | | Qp 0.5 tsf |
| SS 13 | 1.5 | 1.5 | WH/6-9-9 | 18 | | | | -48 | 60 | | | 60.5 | Medium dense gray f SAND, little silt, moist<br>SAND/ALLUVIAL | | |

Boring Terminated at 60.5'

Notes:
1. Monitoring Well no. 7 set in borehole offset 6' south from boring B92-7.

ADDITIONAL WATER READINGS

| DATE | DEPTH BELOW WELL COVER TO TOP OF WATER (Ft) |
|---|---|
| 6-1-92 | 3.8 |

# TEST BORING LOG

| Job Number | Client/Project | Sheet No. | Boring No. |
|---|---|---|---|
| 65190-00 | David Volkert & Associates, Inc.<br>Martin Luther King Freeway Extension | 1 of 2 | B92-8 |

Project Location: Portsmouth, Virginia

Logged: Harvey Beaulieu

SAMPLE LEGEND:
- NR = Sample Not Recovered
- SS = Standard Penetration Split Spoon Sample
- ST = Pushed Shelby Tube
- B = Disturbed Bag Sample
- LL = Liquid Limit
- PI = Plasticity Index
- AC = Auger Cutting

| Start | Finish | Driller/Subcontractor | Drill Make & Model | Total Depth (ft) |
|---|---|---|---|---|
| Time: 8:33 am<br>Date: 3-20-92 | Time: 10:19 am<br>Date: 3-20-92 | Richard Stallings<br>VDH&T | CME 45 ATV | 60.5 |

Water Level Observations

| Date | Time | Boring Depth(ft) | Casing Depth(ft) | Caved Depth(ft) | Water Depth(ft) |
|---|---|---|---|---|---|
| 3-20-92 | 8:38am | 4.0 | N/A | N/A | 3.0 |
| 3-20-92 | 10:35am | 60.5 | N/A | 3.5 | 2.0 |
| 4-2-92 | 8:40am | 11.5* | 10.0* | N/A | 2.3* |
| 4-6-92 | 10:31am | 11.5* | 10.0* | N/A | 2.7* |

| SAMPLE TYPE | SAMP. ADV. / CORE LENG. (ft) | SAMPLE REC. / CORE REC. (ft) | SAMPLE BLOWS / %CORE RECOVERY RQD | N" VALUE BLOWS/FOOT | LAB TESTS: MOISTURE CONTENT(%) | LL | PI | ELEV. (ft) +1 | DEPTH (ft) | GRAPHICS | SAMPLE | STRATA DEPTH (ft) | DESCRIPTION AND CLASSIFICATION | WELL | REMARKS |
|---|---|---|---|---|---|---|---|---|---|---|---|---|---|---|---|
| | | | | | | | | 12.0 | | | | | | | *-marked water level readings are from well no. 8. Additional water readings are shown on the last B92-8 log sheet. |
| SS 1 | 1.5 | 1.5 | 13-8-6 | 14 | 22 | | | | 5 | | | | Medium dense light tan, tan-gray f-m SAND, tr. silt, wet | | |
| SS 2 | 1.5 | 1.0 | 4-2-2 | 4 | | | | | 10 | | | | Very loose gray f-m SAND, some silt, wet | | |
| SS 3 | 1.5 | 1.0 | WR/6-4-7 | 11 | | | | | 15 | | | | Medium dense gray f-m SAND, little silt, wet | | |
| SS 4 | 1.5 | 0.8 | WR/3-WH/15 | WH/12 | | | | -11 | 20 | | | 23.0 | Very loose gray f SAND, little silt, wet<br>SAND/ALLUVIAL | | |
| SS 5 | 1.5 | 1.0 | WR/4-WH/6-2 | 2 | | | | | 25 | | | | Very soft gray silty CLAY, very moist | | Qp < 0.25 tsf<br>Shelby tube pushed 25'-27' in B92-8A, 20" rec. |
| SS 6 | 1.5 | 1.5 | WR/3-WH/15 | WH/12 | | | | | 30 | | | | Very soft gray silty CLAY, tr. peat partings/seams, moist | | Qp < 0.25 tsf |

HALEY & ALDRICH, INC.
Bethesda, Maryland

BORING NO. B92-8



# TEST BORING LOG

| Job Number | Client/Project | Sheet No. | Boring No. |
|---|---|---|---|
| 65190-00 | David Volkert & Associates, Inc.<br>Martin Luther King Freeway Extension | 2 of 2 | B92-8 |

Project Location: Portsmouth, Virginia

Logged: Harvey Beaulieu

| SAMPLE TYPE | SAMP. ADV. / CORE LENG. (ft) | SAMPLE REC. / CORE REC. (ft) | SAMPLE BLOWS / %CORE RECOVERY RQD | N" VALUE BLOWS/FOOT | LAB TESTS: MOISTURE CONTENT(%) | LL | PI | ELEV. (ft) +1 | DEPTH (ft) | GRAPHICS | SAMPLE | STRATA DEPTH (ft) | DESCRIPTION AND CLASSIFICATION | WELL | REMARKS |
|---|---|---|---|---|---|---|---|---|---|---|---|---|---|---|---|
| SS 7 | 1.5 | 1.5 | 2-5-6 | 11 | | | | -23 | 35 | | | 35.0 | --, CLAY & SILT<br>silty CLAY/ALLUVIAL<br>Medium stiff light to dark brown **DECOMPOSED WOOD**, spongy, one fragment 35'-35.5', very moist | | |
| SS 8 | 1.5 | 0.1 | 3-3-3 | 6 | | | | | 40 | | | | -- | | Shelby tube pushed 40'-42' in B92-8A, 12" rec. |
| SS 9 | 1.5 | 1.5 | WH/6-2-4 | 6 | | | | | 45 | | | | Medium stiff brown, gray-brown **PEAT**, some organic clayey silt, tr. twigs/roots up to 1/4" in diameter, moist | | |
| SS 10 | 1.5 | 1.0 | WR/12-2 | 2 | | | | -36 | 50 | | | 48.0 | PEAT/clayey silt/MARSH-ALLUVIAL<br>Very loose gray f-m SAND, little silt, 3" decomposed wood fragment in tip of spoon, very moist | | |
| SS 11 | 1.5 | 1.5 | WH/6-3-3 | 6 | | | | | 55 | | | | Very loose gray, gray-brown f-m SAND, little silt, little clayey silt seams, tr. peat partings, tr. mica, very moist | | 25' of run-up at depth 54' |
| SS 12 | 1.5 | 1.5 | 3-1-1 | 2 | | | | -46<br>-49 | 60 | | | 58.0<br>60.5 | SAND/ALLUVIAL<br>Very soft gray CLAY & SILT, little f-m sand, occasional silty clay seams, tr. mica, moist<br>CLAY/SILT/ALLUVIAL<br>Boring Terminated at 60.5' | | Shelby tube pushed 61'-63' in B92-8A, 12" rec. |

Notes:
1. Monitoring Well no. 8 set in borehole offset 27' SW from boring B92-8.
2. Shelby tubes pushed in boring B92-8A offset 5' NE from boring B92-8.

**ADDITIONAL WATER LEVEL READINGS**

| DATE | DEPTH BELOW WELL COVER TO TOP OF WATER (Ft) |
|---|---|
| 6-1-92 | 2.8 |

HALEY & ALDRICH, INC.
Bethesda, Maryland

BORING NO. B92-8

# TEST BORING LOG

| Job Number | Client/Project | Sheet No. | Boring No. |
|---|---|---|---|
| 65190-00 | David Volkert & Associates, Inc.<br>Martin Luther King Freeway Extension | 1 of 2 | B92-8A |

Project Location: Portsmouth, Virginia

Logged: Harvey Beaulieu

SAMPLE LEGEND:
- NR = Sample Not Recovered
- SS = Standard Penetration Split Spoon Sample
- ST = Pushed Shelby Tube
- B = Disturbed Bag Sample
- LL = Liquid Limit
- PI = Plasticity Index
- AC = Auger Cutting

| Start | Finish | Driller/Subcontractor | Drill Make & Model | Total Depth (ft) |
|---|---|---|---|---|
| Time: 10:25am<br>Date: 4-6-92 | Time: 12:55pm<br>Date: 4-6-92 | Richard Stallings<br>VDH&T | CME 45 ATV | 67.0 |

Water Level Observations

| Date | Time | Boring Depth(ft) | Casing Depth(ft) | Caved Depth(ft) | Water Depth(ft) |
|---|---|---|---|---|---|
| | | | | | |
| | | | | | |
| | | | | | |
| | | | | | |

| SAMPLE TYPE | SAMP. ADV. / CORE LENG. (ft) | SAMPLE REC. / CORE REC. (ft) | SAMPLE BLOWS / %CORE RECOVERY RQD | N" VALUE BLOWS/FOOT | LAB TESTS: MOISTURE CONTENT(%) | LL | PI | ELEV.(ft) +1 | DEPTH(ft) | GRAPHICS | SAMPLE | STRATA DEPTH (ft) | DESCRIPTION AND CLASSIFICATION | WELL | REMARKS |
|---|---|---|---|---|---|---|---|---|---|---|---|---|---|---|---|
| | | | | | | | | 12.0 | 0 | | | | | | |
| | | | | | | | | | 5 | | | | | | |
| | | | | | | | | | 10 | | | | | | |
| | | | | | | | | | 15 | | | | | | |
| | | | | | | | | | 20 | | | | | | |
| ST 1 | 2.0 | 1.7 | P | P | | | | -11 | 25 | | | 23.0 | SAND/ALLUVIAL<br>Very soft silty CLAY, moist | | |
| | | | | | | | | | 30 | | | | | | |



# TEST BORING LOG

| Job Number | Client/Project | Sheet No. | Boring No. |
|---|---|---|---|
| 65190-00 | David Volkert & Associates, Inc.<br>Martin Luther King Freeway Extension | 2 of 2 | B92-8A |

Project Location: Portsmouth, Virginia

Logged: Harvey Beaulieu

| SAMPLE TYPE | SAMP. ADV. / CORE LENG. (ft) | SAMPLE REC. / CORE REC. (ft) | SAMPLE BLOWS / %CORE RECOVERY RQD | N" VALUE BLOWS/FOOT | LAB TESTS: MOISTURE CONTENT(%) | LL | PI | ELEV.(ft) +1 | DEPTH (ft) | GRAPHICS | SAMPLE | STRATA DEPTH (ft) | DESCRIPTION AND CLASSIFICATION | WELL | REMARKS |
|---|---|---|---|---|---|---|---|---|---|---|---|---|---|---|---|
| | | | | | | | | -23 | 35 | | | 35.0 | CLAY & SILT/ALLUVIAL | | |
| ST 2 | 2.0 | 1.0 | P | P | | | | | 40 | | | | Soft brown, yellow-brown PEAT AND decomposed WOOD FRAGMENTS, little organic clayey silt, moist | | |
| | | | | | | | | -36 | 45 | | | 48.0 | PEAT/silt/MARSH-ALLUVIAL | | |
| | | | | | | | | | 50 | | | | | | |
| | | | | | | | | | 55 | | | | | | |
| | | | | | | | | -46 | 60 | | | 58.0 | SAND/ALLUVIAL | | |
| ST 3 | 2.0 | 1.0 | P | P | | | | | | | | | Very soft gray silty CLAY, tr. peat partings, roots, moist | | |
| SS 4 | 2.0 | 2.0 | 4-4-4 -5 | 8 | | | | | | | | | | | |
| SS 5 | 2.0 | 1.5 | 7-11- 12-12 | 23 | | | | -54 | 65 | | | 66.0 | silty CLAY/ALLUVIAL | | |
| | | | | | | | | -55 | | | | 67.0 | Medium dense gray f-m SAND AND SILT, tr. white shell fragments, very moist<br>SAND & SILT/ALLUVIAL<br>Boring Terminated at 67'<br>Notes:<br>1. Material stratigraphic contacts above depth 65' are from boring B92-8 offset 5' SW from B92-8A. | | |

# TEST BORING LOG

| Job Number | Client/Project | Sheet No. | Boring No. |
|---|---|---|---|
| 65190-00 | David Volkert & Associates, Inc.<br>Martin Luther King Freeway Extension | 1 of 2 | B92-9 |

Project Location: Portsmouth, Virginia

Logged: Harvey Beaulieu

SAMPLE LEGEND:
NR = Sample Not Recovered
SS = Standard Penetration Split Spoon Sample
ST = Pushed Shelby Tube
B = Disturbed Bag Sample
LL = Liquid Limit
PI = Plasticity Index
AC = Auger Cutting

| Start | Finish | Driller/Subcontractor | Drill Make & Model | Total Depth (ft) |
|---|---|---|---|---|
| Time: 8:34am<br>Date: 3-24-92 | Time: 9:49am<br>Date: 3-24-92 | Richard Stallings<br>VDH&T | CME 45 ATV | 60.5 |

| Water Level Observations Date | Time | Boring Depth(ft) | Casing Depth(ft) | Caved Depth(ft) | Water Depth(ft) |
|---|---|---|---|---|---|
| 3-24-92 | 8:40am | 4.0 | N/A | N/A | 2.5 |
| 3-24-92 | 10:14am | 60.5 | N/A | 3.0 | 2.5 |

| SAMPLE TYPE | SAMP. ADV. CORE LENG. (ft) | SAMPLE REC. CORE REC. (ft) | SAMPLE BLOWS %CORE RECOVERY RQD | N" VALUE BLOWS/FOOT | LAB TESTS MOISTURE CONTENT(%) | LL | PI | ELEV. (ft) +1 | DEPTH (ft) | GRAPHICS SAMPLE | STRATA DEPTH (ft) | DESCRIPTION AND CLASSIFICATION | WELL | REMARKS |
|---|---|---|---|---|---|---|---|---|---|---|---|---|---|---|
| | | | | | | | | 11.8 | | | | | | |
| SS 1 | 1.5 | 1.5 | 5-5-4 | 9 | 22 | | | | 5 | | | Medium dense gray, brown-gray f-m SAND, tr. silt, wet | | |
| SS 2 | 1.5 | 1.5 | WH-/10"/1/2"-2 | 2 | | | | | 10 | | | --, very loose f SAND, little silt, wet | | |
| SS 3 | 1.5 | 1.5 | 2-5-5 | 10 | | | | | 15 | | | Medium dense gray f-m SAND, little silt, tr. white shell fragments, wet | | |
| SS 4 | 1.5 | 1.5 | WR/5-WH/13 | WH/12 | | | | | 20 | | | Very loose gray f SAND, some silt, tr. shell fragments, wet | | |
| | | | | | | | | -11 | | | 23.0 | SAND/ALLUVIAL | | |
| SS 5 | 1.5 | 1.5 | WH/9-1/3"-1 | 2 | 69 | 48 | 20 | | 25 | | | Very soft gray silty CLAY, moist | | Qp < 0.25 tsf |



# TEST BORING LOG

| Job Number | Client/Project | Sheet No. | Boring No. |
|---|---|---|---|
| 65190-00 | David Volkert & Associates, Inc.<br>Martin Luther King Freeway Extension | 2 of 2 | B92-9 |

Project Location: Portsmouth, Virginia

Logged: Harvey Beaulieu

| SAMPLE TYPE | SAMP. ADV. CORE LENG. (ft) | SAMPLE REC. CORE REC. (ft) | SAMPLE BLOWS %CORE RECOVERY RQD | N" VALUE BLOWS/FOOT | LAB TESTS MOISTURE CONTENT(%) | LL | PI | ELEV. (ft) +1 | DEPTH (ft) | GRAPHICS SAMPLE | STRATA DEPTH (ft) | DESCRIPTION AND CLASSIFICATION | WELL | REMARKS |
|---|---|---|---|---|---|---|---|---|---|---|---|---|---|---|
| SS 6 | 1.5 | 1.5 | WR/6-WH/6-1 | 1 | | | | | 30 | | | --, tr. f decomposed wood fragments | | Qp < 0.25 taf |
| SS 7 | 1.5 | 1.5 | 1-3-4 | 7 | | | | -23 | 35 | | 35.0 | Very soft gray silty CLAY, tr. f mica, tr. f decomposed wood fragments, moist<br>silty CLAY/ALLUVIAL<br>Soft brown, yellow-brown PEAT AND DECOMPOSED WOOD, some organic silt, moist | | Qp < 0.25 taf |
| SS 8 | 1.5 | 1.5 | 1-3-3 | 6 | 73 | 75 | NP | | 40 | | | --, decomposed WOOD fragments up to 3", spongy, very moist | | |
| SS 9 | 1.5 | 1.5 | WR/6-2-1 | 3 | | | | -33 | 45 | | 45.0 | Soft brown, light-brown PEAT, some organic silt, little wood fragments up to 1/2", moist<br>PEAT/WOOD/MARSH<br>Very loose gray-brown f SAND, some silt, tr. mica, moist | | Qp 0.5-1.0 tsf |
| SS 10 | 1.5 | 1.5 | WR/6-1-1 | 2 | | | | | 50 | | | --, AND SILT, tr. peat, occasional silt seams | | |
| SS 11 | 1.5 | 1.0 | WR/6-WH/6-1 | 1 | | | | | 55 | | | --, f-m SAND AND SILT, tr. decomposed wood fragments, very moist | | |
| | | | | | | | | -46 | | | 58.0 | SAND/SILT/ALLUVIAL | | |
| SS 12 | 1.5 | 1.5 | WR/6-1-2 | 3 | | | | -49 | 60 | | 60.5 | Soft gray, brown-gray CLAY & SILT, little f sand, tr. mica, tr. peat partings, bedded throughout in seams/partings,<br>CLAY/SILT/ALLUVIAL<br>Boring Terminated at 60.5' | | Qp = 0.5 tsf |

# TEST BORING LOG

| Job Number | Client/Project | Sheet No. | Boring No. |
|---|---|---|---|
| 65190-00 | David Volkert & Associates, Inc.<br>Martin Luther King Freeway Extension | 1 of 2 | B92-10 |
| **Project Location** | | **Logged** | |
| Portsmouth, Virginia | | Harvey Beaulieu | |

SAMPLE LEGEND:
- NR = Sample Not Recovered
- SS = Standard Penetration Split Spoon Sample
- ST = Pushed Shelby Tube
- B = Disturbed Bag Sample
- LL = Liquid Limit
- PI = Plasticity Index
- AC = Auger Cutting

| Start | Finish | Driller/Subcontractor | Drill Make & Model | Total Depth (ft) |
|---|---|---|---|---|
| Time: 11:03am<br>Date: 3-24-92 | Time: 12:11pm<br>Date: 3-24-92 | Richard Stallings<br>VDH&T | CME 45 ATV | 60.5 |

Water Level Observations

| Date | Time | Boring Depth(ft) | Casing Depth(ft) | Caved Depth(ft) | Water Depth(ft) |
|---|---|---|---|---|---|
| 3-24-92 | 11:08am | 5.5 | N/A | N/A | 2.5 |
| 3-24-92 | 12:31pm | 60.5 | N/A | 4.5 | 4.0 |
| 3-25-92 | 3:39pm | 60.5 | N/A | 2.3 | 1.0 |
| 4-7-92 | 6:03pm | 11.5* | 10.0* | N/A | 2.6* |

| SAMPLE TYPE | SAMP. ADV. CORE LENG. (ft) | SAMPLE REC. CORE REC. (ft) | SAMPLE BLOWS /CORE RECOVERY RQD | N" VALUE BLOWS/FOOT | LAB TESTS: MOISTURE CONTENT (%) | LL | PI | ELEV. (ft) +1 | DEPTH (ft) | GRAPHICS | SAMPLE | STRATA DEPTH (ft) | DESCRIPTION AND CLASSIFICATION | WELL | REMARKS |
|---|---|---|---|---|---|---|---|---|---|---|---|---|---|---|---|
| | | | | | | | | 12.8 | | | | | | | |
| SS 1 | 1.5 | 1.0 | WR/6-1-4 | 5 | 24 | | | | 5 | | | | Loose gray f-m SAND, tr. silt, wet | | *-marked water level readings are from well no. 10.<br>Additional water readings are shown on the final B92-10 log sheet |
| SS 2 | 1.5 | 1.5 | WR/3-1/3-2-4 | 6 | | | | | 10 | | | | | | |
| SS 3 | 1.5 | 1.5 | 1-5-7 | 12 | | | | | 15 | | | | --, medium dense f SAND, tr. mica, wet | | |
| SS 4 | 1.5 | 1.5 | WR/6-1-1 | 2 | | | | | 20 | | | | Very loose gray f SAND, some silt, tr. mica, wet | | |
| | | | | | | | | -10 | | | | 23.0 | SAND/ALLUVIAL | | |
| SS 5 | 1.5 | 1.0 | 3-2-1 | 3 | 63 | 66 | 19 | | 25 | | | | Soft gray **silty CLAY**, tr. f decomposed wood fragments, moist | | Qp = 0.5 tsf |
| | | | | | | | | -15 | | | | 28.0 | silty CLAY/ALLUVIAL | | |

HALEY & ALDRICH, INC.
Bethesda, Maryland

BORING NO. B92-10



# TEST BORING LOG

| Job Number | Client/Project | Sheet No. | Boring No. |
|---|---|---|---|
| 65190-00 | David Volkert & Associates, Inc.<br>Martin Luther King Freeway Extension | 2 of 2 | B92-10 |
| **Project Location** | | **Logged** | |
| Portsmouth, Virginia | | Harvey Beaulieu | |

| SAMPLE TYPE | SAMP. ADV. CORE LENG. (ft) | SAMPLE REC. CORE REC. (ft) | SAMPLE BLOWS /CORE RECOVERY RQD | N" VALUE BLOWS/FOOT | LAB TESTS: MOISTURE CONTENT (%) | LL | PI | ELEV. (ft) +1 | DEPTH (ft) | GRAPHICS | SAMPLE | STRATA DEPTH (ft) | DESCRIPTION AND CLASSIFICATION | WELL | REMARKS |
|---|---|---|---|---|---|---|---|---|---|---|---|---|---|---|---|
| SS 6 | 1.5 | 1.5 | 1-2-3 | 5 | | | | | 30 | | | | Very soft brown PEAT, some organic silt, tr. f decomposed wood fragments, moist | | Qp < 0.25 tsf |
| | | | | | | | | -20 | | | | 33.0 | PEAT/silt/MARSH-ALLUVIAL | | |
| SS 7 | 1.5 | 1.5 | 2-2-2 | 4 | 81 | 50 | 20 | | 35 | | | | Very soft gray, brown-gray **CLAY & SILT**, PEAT layer 3" thick, occasional clayey silt layers up to 1", tr. mica, moist | | Qp < 0.25 tsf |
| | | | | | | | | -24 | | | | 37.0 | CLAY/SILT/peat/ALLUVIAL | | |
| SS 8 | 1.5 | 1.5 | WR/6-1-1 | 2 | | | | | 40 | | | | Very soft gray silty CLAY, tr. mica, tr. clayey silt partings, moist | | Qp < 0.25 tsf |
| SS 9 | 1.5 | 1.5 | WH/6-3-7 | 10 | | | | | 45 | | | | --, gray, brown-gray | | Qp < 0.25 tsf |
| SS 10 | 1.5 | 1.5 | WR/6-WH/12 | WH /12 | | | | -38 | 50 | | | 51.0 | --, occasional (f-m sand, little silt) layers, moist<br>silty CLAY/ALLUVIAL | | Qp < 0.25 tsf |
| SS 11 | 1.5 | 1.5 | WR/6-7-12 | 19 | | | | -45 | 55 | | | 58.0 | Medium dense gray f-m SAND, tr. silt, silty CLAY layer 54.5'-55', tr. peat, wet<br>SAND/silty clay/ALLUVIAL | | |
| SS 12 | 1.5 | 1.5 | 2-1-2 | 3 | | | | -48 | 60 | | | 60.5 | Soft gray **CLAY & SILT AND f-m SAND**, little peat, tr. mica, moist<br>CLAY & SILT/SAND/ALLUVIAL | | |
| | | | | | | | | | | | | | Boring Terminated at 60.5' | | |

Notes:
1. Monitoring Well no. 10 set in borehole offset 8'SE from boring B92-10.

**ADDITIONAL WATER LEVEL READINGS**

| DATE | DEPTH BELOW WELL COVER TO TOP OF WATER (Ft) |
|---|---|
| 6-1-92 | 3.4 |

HALEY & ALDRICH, INC.
Bethesda, Maryland

BORING NO. B92-10

# TEST BORING LOG

Job Number: 65190-00
Client/Project: David Volkert & Associates, Inc. — Martin Luther King Freeway Extension
Sheet No.: 2 of 2
Boring No.: B92-4
Project Location: Portsmouth, Virginia
Logged: Harvey Beaulieu

| SAMPLE TYPE | SAMP. ADV. (ft) / CORE LENG. | SAMPLE REC. (ft) / CORE REC. | SAMPLE BLOWS / %CORE RECOVERY / RQD | N" VALUE BLOWS/FOOT | LAB TESTS: MOISTURE CONTENT (%) | LL | PI | ELEV. (ft) ± | DEPTH (ft) | GRAPHICS SAMPLE | STRATA DEPTH (ft) | DESCRIPTION AND CLASSIFICATION | WELL | REMARKS |
|---|---|---|---|---|---|---|---|---|---|---|---|---|---|---|
| SS 6 | 1.5 | 1.5 | WH/9-1-2 | 3 | | | | | 30 | | | Soft gray-brown, olive-brown organic **clayey** SILT, little peat, little f sand, tr. mica, moist | | Qp = 0.75 tsf |
| | | | | | | | | | | | | | | Shelby tube pushed 31'-33' in B92-4A, 9" rec. |
| SS 7 | 1.5 | 1.5 | WH/6-1-9 | 10 | | | | -23 | 35 | | 35.0 | Very soft gray-brown **silty CLAY**, little peat, tr. f sand, moist — SILT/CLAY/ALLUVIAL | | Qp < 0.25 tsf |
| | | | | | | | | | | | | Loose gray f SAND, little silt, moist | | |
| SS 8 | 1.5 | 1.5 | 2-7-16 | 23 | | | | | 40 | | | Dense gray f SAND, tr. silt, occasional peat seams 1/4" thick, moist | | |
| SS 9 | 1.5 | 1.5 | 4-8-11 | 19 | | | | | 45 | | | Medium dense gray f-m SAND, tr. silt, tr. peat, tr. mica, moist | | |
| SS 10 | 1.5 | 1.5 | 1-7-7 | 14 | | | | | 50 | | | Medium dense gray f SAND, little silt, tr. peat, tr. mica, moist | | |
| SS 11 | 1.5 | 1.5 | 7-9-13 | 22 | | | | | 55 | | | Medium dense gray f-m SAND, tr. silt, tr. f gravel, tr. peat, moist | | |
| SS 12 | 1.5 | 1.5 | 2-5-4 | 9 | 27 | | | -48 | 60 | | 59.5 | --, no gravel — SAND/ALLUVIAL | | |
| | | | | | | | | -49 | | | 60.5 | Soft gray, brown-gray **silty CLAY**, tr. mica, moist — silty CLAY/ALLUVIAL | | Qp = 0.5 tsf |
| | | | | | | | | | | | | Boring Terminated at 60.5' | | |

Notes:
1. Shelby tubes pushed in boring B92-4A offset 2' WSW from B92-4.

HALEY & ALDRICH, INC.
Bethesda, Maryland

BORING NO. B92-4
PAGE A - 10

# TEST BORING LOG

Job Number: 65190-00
Client/Project: David Volkert & Associates, Inc. — Martin Luther King Freeway Extension
Sheet No.: 1 of 2
Boring No.: B92-4A
Project Location: Portsmouth, Virginia
Logged: Harvey Beaulieu

SAMPLE LEGEND:
- NR = Sample Not Recovered
- SS = Standard Penetration Split Spoon Sample
- ST = Pushed Shelby Tube
- B = Disturbed Bag Sample
- LL = Liquid Limit
- PI = Plasticity Index
- AC = Auger Cutting

Start: Time: 2:52pm, Date: 4-6-92
Finish: Time: 4:30pm, Date: 4-6-92
Driller/Subcontractor: Richard Stallings, VDH&T
Drill Make & Model: CME 45 ATV
Total Depth (ft): 33.0

Water Level Observations

| Date | Time | Boring Depth(ft) | Casing Depth(ft) | Caved Depth(ft) | Water Depth(ft) |
|---|---|---|---|---|---|
| | | | | | |
| | | | | | |
| | | | | | |
| | | | | | |

| SAMPLE TYPE | SAMP. ADV. (ft) / CORE LENG. | SAMPLE REC. (ft) / CORE REC. | SAMPLE BLOWS / %CORE RECOVERY / RQD | N" VALUE BLOWS/FOOT | LAB TESTS: MOISTURE CONTENT (%) | LL | PI | ELEV. (ft) ± | DEPTH (ft) | GRAPHICS SAMPLE | STRATA DEPTH (ft) | DESCRIPTION AND CLASSIFICATION | WELL | REMARKS |
|---|---|---|---|---|---|---|---|---|---|---|---|---|---|---|
| | | | | | | | | 11.5 | 5 | | | | | |
| | | | | | | | | | 10 | | | | | |
| | | | | | | | | | 15 | | | | | |
| ST 1 | 2.0 | 1.3 | P | P | | | | -9 | 20 | | 20.0 | SAND/ALLUVIAL | | |
| | | | | | | | | | | | | Dark brown PEAT AND organic clayey SILT, some brown decomposed wood fragments up to 1", moist | | |
| | | | | | | | | -16 | 25 | | 27.0 | PEAT/clayey silt/MARSH-ALLUVIAL | | |

HALEY & ALDRICH, INC.
Bethesda, Maryland

BORING NO. B92-4A
PAGE A - 11

# TEST BORING LOG

| Job Number | Client/Project | Sheet No. | Boring No. |
|---|---|---|---|
| 65190-00 | David Volkert & Associates, Inc.<br>Martin Luther King Freeway Extension | 2 of 2 | B92-4A |
| Project Location: Portsmouth, Virginia | | Logged: Harvey Beaulieu | |

| SAMPLE TYPE | SAMP. ADV. CORE LENG. (ft) | SAMPLE REC. CORE REC. (ft) | SAMPLE BLOWS %CORE RECOVERY RQD | N" VALUE BLOWS/FOOT | LAB TESTS: MOISTURE CONTENT (%) | LL | PI | ELEV. (ft) ±1 | DEPTH (ft) | GRAPHICS | SAMPLE | STRATA DEPTH (ft) | DESCRIPTION AND CLASSIFICATION | WELL | REMARKS |
|---|---|---|---|---|---|---|---|---|---|---|---|---|---|---|---|
| ST | 2.0 | N/R | P | P | | | | | 30 | | | | | | |
| ST 2 | 2.0 | 0.8 | P | P | | | | -22 | | | | 33.0 | Gray clayey SILT AND f SAND, moist<br>clayey SILT/SAND/ALLUVIAL<br>Boring Terminated at 33'<br>Notes:<br>1. Stratigraphic contacts are from boring B92-4 offset 2' east from B92-4A. | | |

HALEY & ALDRICH, INC.
Bethesda, Maryland

BORING NO. B92-4A
PAGE A - 12

# TEST BORING LOG

| Job Number | Client/Project | Sheet No. | Boring No. |
|---|---|---|---|
| 65190-00 | David Volkert & Associates, Inc.<br>Martin Luther King Freeway Extension | 1 of 2 | B92-5 |
| Project Location: Portsmouth, Virginia | | Logged: Harvey Beaulieu | |

SAMPLE LEGEND:
NR = Sample Not Recovered
SS = Standard Penetration Split Spoon Sample
ST = Pushed Shelby Tube
B = Disturbed Bag Sample
LL = Liquid Limit
PI = Plasticity Index
AC = Auger Cutting

| Start | Finish | Driller/Subcontractor | Drill Make & Model | Total Depth (ft) |
|---|---|---|---|---|
| Time: 8:50am<br>Date: 3-27-92 | Time: 10:13am<br>Date: 3-27-92 | Richard Stallings<br>VDH&T | CME 45 ATV | 60.5 |

| Water Level Observations Date | Time | Boring Depth(ft) | Casing Depth(ft) | Caved Depth(ft) | Water Depth(ft) |
|---|---|---|---|---|---|
| 3-27-92 | 9:04am | 5.5 | N/A | N/A | 4.0 |
| 3-27-92 | 10:38am | 60.5 | N/A | N/A | 7.5 |
| 4-7-92 | 5:29pm | 11.5* | 10.0* | N/A | 2.3* |
| 6-1-92 | no data | 11.5* | 10.0* | N/A | 3.0* |

| SAMPLE TYPE | SAMP. ADV. CORE LENG. (ft) | SAMPLE REC. CORE REC. (ft) | SAMPLE BLOWS %CORE RECOVERY RQD | N" VALUE BLOWS/FOOT | LAB TESTS: MOISTURE CONTENT (%) | LL | PI | ELEV. (ft) ±1 | DEPTH (ft) | GRAPHICS | SAMPLE | STRATA DEPTH (ft) | DESCRIPTION AND CLASSIFICATION | WELL | REMARKS |
|---|---|---|---|---|---|---|---|---|---|---|---|---|---|---|---|
| | | | | | | | | 15.6 | | | | | Gray c-f GRAVEL up to 2", dry to moist | | |
| | | | | | | | | 14 | | | | 1.5 | FILL | | |
| SS 1 | 1.5 | 1.0 | 2-7-10 | 17 | 16 | | | | | | | | Dense black-brown m-f SAND, little f gravel, tr. silt, tr. iron stains, moist | | *-marked water level readings are from well no. 5. |
| SS 2 | 1.5 | 1.5 | 1-3-4 | 7 | | | | 12 | 5 | | | 4.0 | POSSIBLE FILL<br>Soft gray, brown-gray silty CLAY, little f-m sand, moist | | Qp < 0.5 taf @ 4'<br>Slight sheen observed on water @ 4.5'; no response on HNu PID |
| | | | | | | | | 9 | | | | 7.0 | silty CLAY/ALLUVIAL | | |
| SS 3 | 1.5 | 1.5 | 5-4-2 | 6 | | | | | 10 | | | | Loose gray, tan-brown f-m SAND, tr. silt, wet | | No response on HNu PID |
| SS 4 | 1.5 | 1.5 | 2-6-7 | 13 | | | | | 15 | | | | --, medium dense gray-tan | | " " " " |
| SS 5 | 1.5 | 1.5 | 1-2-3 | 5 | 25 | 18 | NP | | 20 | | | | Loose gray f SAND, little silt, wet | | " " " " |
| | | | | | | | | -6 | | | | 22.0 | SAND/ALLUVIAL | | |
| SS 6 | 1.5 | 1.5 | WH/17 -1 | WH /12 | | | | | 25 | | | | Very soft gray, brown-gray SILT AND CLAY, some f sand, occasional 1" (silty CLAY, some peat) layers, tr. shell fragments, moist | | Shelby tube pushed 23'-25' in B92-5A, 12" rec.<br>Qp < 0.25 tsf |
| | | | | | | | | -11 | | | | 27.0 | SILT/CLAY/sand/ALLUVIAL | | |

HALEY & ALDRICH, INC.
Bethesda, Maryland

BORING NO. B92-5
PAGE A - 13

# APPENDIX C

# PLATES

# APPENDIX A

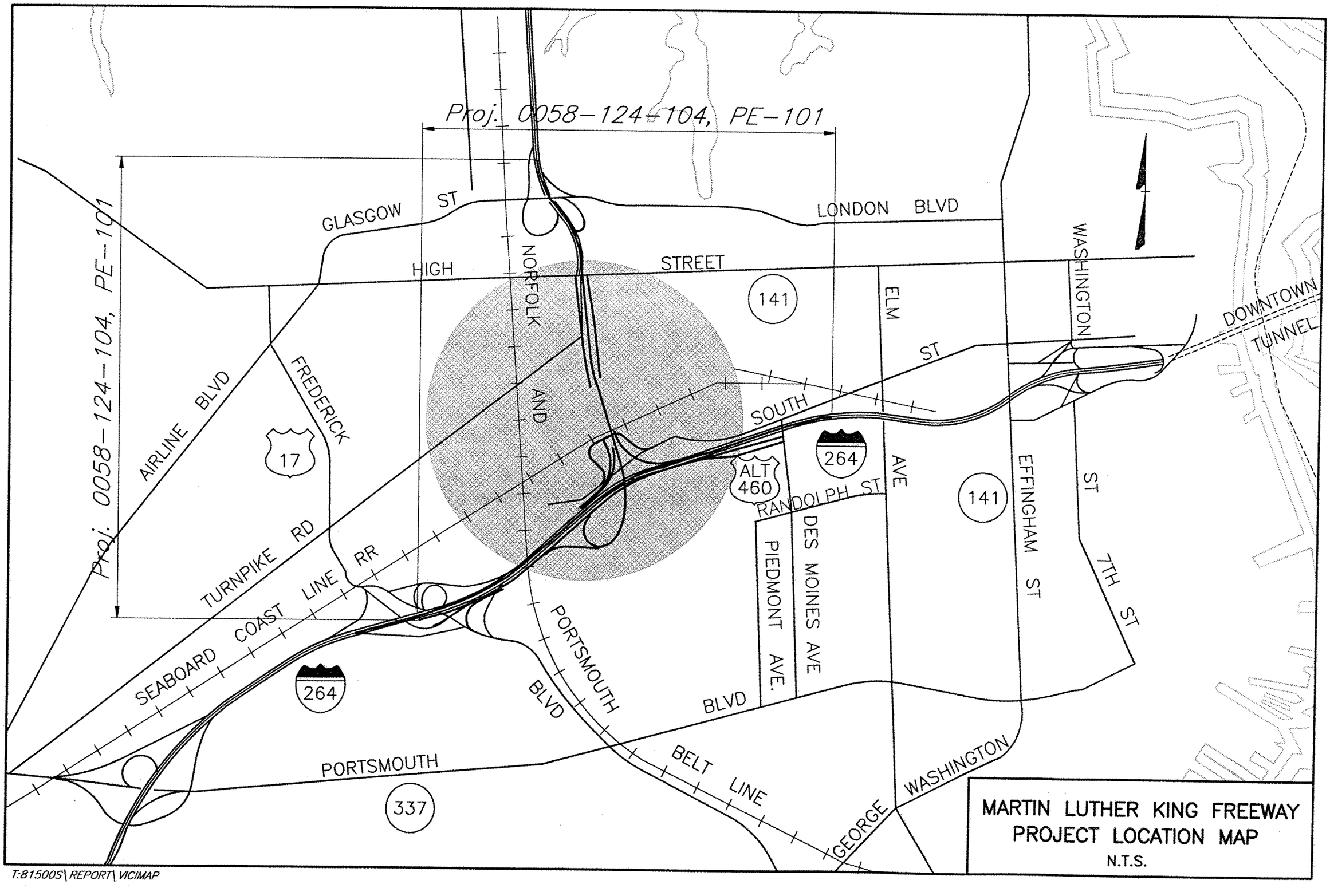


T:81500S\REPORT\VICIMAP

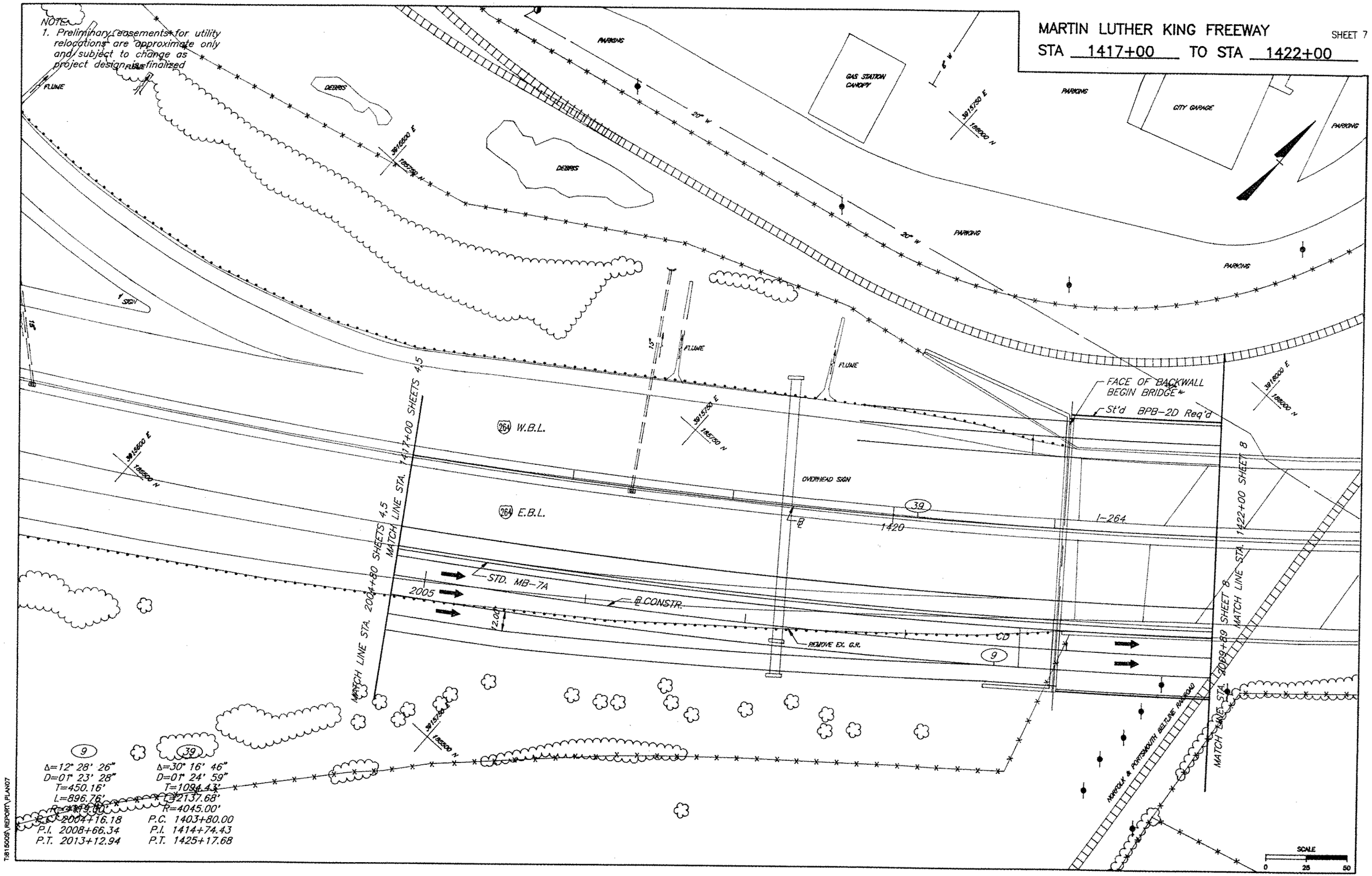
MARTIN LUTHER KING FREEWAY
SHEET 7
STA 1417+00 TO STA 1422+00
NOTE:
1. Preliminary easements for utility relocations are approximate only and subject to change as project design is finalized
FLUME
DEBRIS
PARKING
GAS STATION CANOPY
CITY GARAGE
20" W
6" W
SIGN
15"
FACE OF BACKWALL BEGIN BRIDGE
St'd BPB-2D Req'd
W.B.L.
E.B.L.
OVERHEAD SIGN
39
1420
I-264
STD. MB-7A
2005
℄ CONSTR.
12.00
REMOVE EX. G.R.
CD
9
MATCH LINE STA. 2004+80 SHEETS 4,5
MATCH LINE STA. 1417+00 SHEETS 4,5
MATCH LINE STA. 1422+00 SHEET 8
MATCH LINE STA. 2009+89 SHEET 8
NORFOLK & PORTSMOUTH BELTLINE RAILROAD
Δ=12° 28' 26"
D=01° 23' 28"
T=450.16'
L=896.76'
P.C. 2004+16.18
P.I. 2008+66.34
P.T. 2013+12.94
Δ=30° 16' 46"
D=01° 24' 59"
T=1094.43'
L=2137.68'
R=4045.00'
P.C. 1403+80.00
P.I. 1414+74.43
P.T. 1425+17.68
SCALE
0
25
50
T:81500S\REPORT\PLAN07

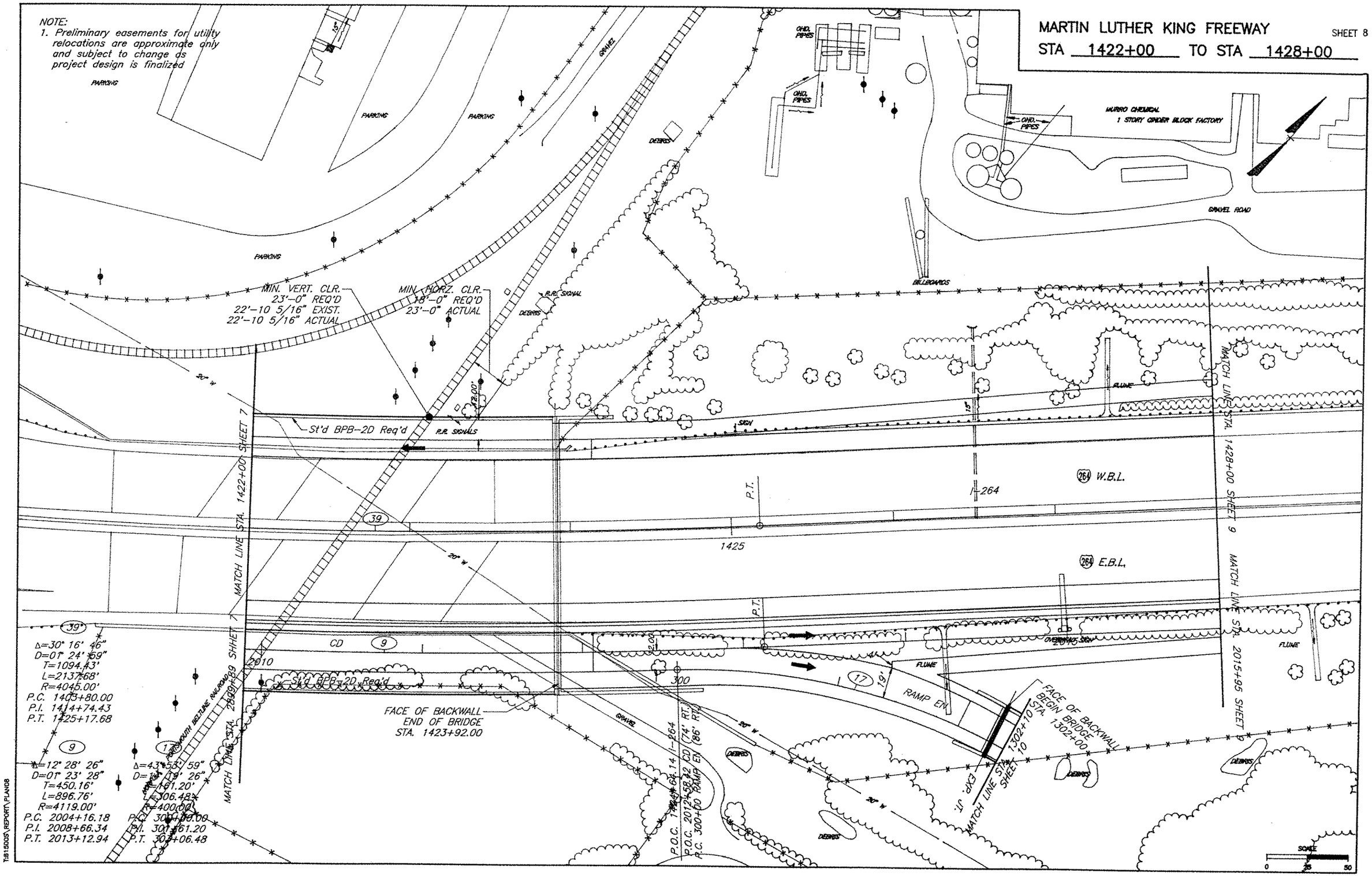

NOTE:
1. Preliminary easements for utility relocations are approximate only and subject to change as project design is finalized
MARTIN LUTHER KING FREEWAY
SHEET 8
STA 1422+00 TO STA 1428+00
PARKING
GRAVEL
DEBRIS
OHD. PIPES
MURRO CHEMICAL
1 STORY CINDER BLOCK FACTORY
GRAVEL ROAD
BILLBOARDS
MIN. VERT. CLR.
23'-0" REQ'D
22'-10 5/16" EXIST.
22'-10 5/16" ACTUAL
MIN. HORZ. CLR.
18'-0" REQ'D
23'-0" ACTUAL
R.R. SIGNAL
St'd BPB-2D Req'd
R.R. SIGNALS
SIGN
FLUME
MATCH LINE STA. 1422+00 SHEET 7
MATCH LINE STA. 1428+00 SHEET 9
MATCH LINE STA. 2015+95 SHEET 9
MATCH LINE STA. 2899+89 SHEET 7
MATCH LINE STA. 1302+10 SHEET 10
EXP. JT.
264 W.B.L.
264 E.B.L.
I-264
P.T.
1425
39
39*
CD
9
2010
300
17
19'
RAMP EN
FACE OF BACKWALL
END OF BRIDGE
STA. 1423+92.00
FACE OF BACKWALL
BEGIN BRIDGE
STA. 1302+00
Δ=30° 16' 46"
D=01° 24' 59"
T=1094.43'
L=2137.68'
R=4045.00'
P.C. 1403+80.00
P.I. 1414+74.43
P.T. 1425+17.68
Δ=12° 28' 26"
D=01° 23' 28"
T=450.16'
L=896.76'
R=4119.00'
P.C. 2004+16.18
P.I. 2008+66.34
P.T. 2013+12.94
Δ=43° 53' 59"
D=14° 19' 26"
T=161.20'
L=306.48'
R=400.00'
P.C. 300+00.00
P.I. 301+61.20
P.T. 303+06.48
P.O.C. 1424+64.14 I-264
P.O.C. 2012+58.42 CD (74' RT.)
P.C. 300+00 RAMP EN (86' RT.)
SCALE
0
25
50
T:\815005\REPORT\PLAN08

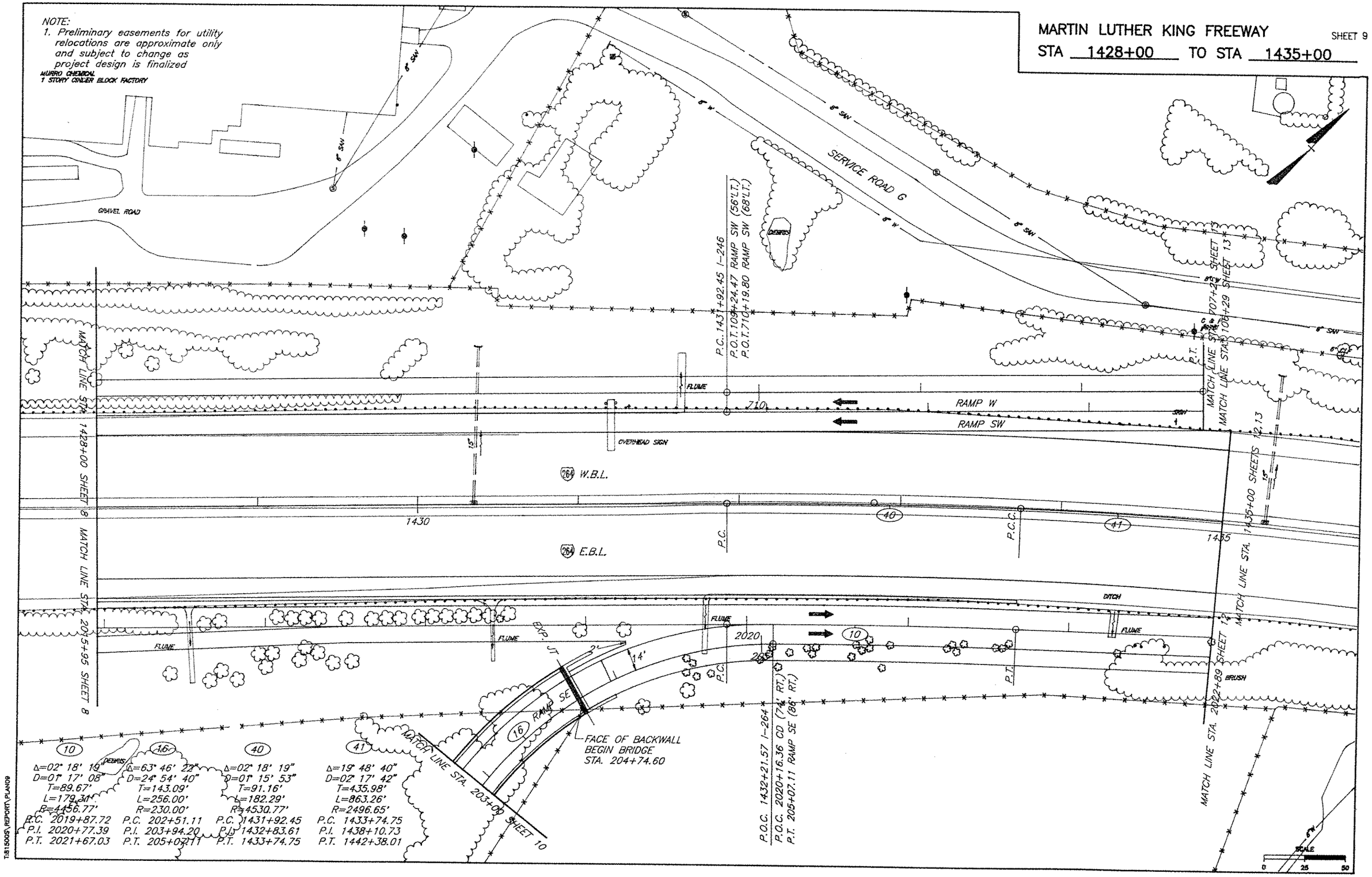

NOTE:
1. Preliminary easements for utility relocations are approximate only and subject to change as project design is finalized
MURRO CHEMICAL
1 STORY CINDER BLOCK FACTORY
MARTIN LUTHER KING FREEWAY
SHEET 9
STA 1428+00 TO STA 1435+00
GRAVEL ROAD
SERVICE ROAD G
8" SAN
8" W
DEBRIS
P.C. 1431+92.45 I-246
P.O.T. 109+24.47 RAMP SW (56'LT.)
P.O.T. 710+19.80 RAMP SW (68'LT.)
P.T. 707+23 SHEET 13
MATCH LINE STA. 1428+00 SHEET 8
MATCH LINE STA. 2015+95 SHEET 8
MATCH LINE STA. 1435+00 SHEETS 12,13
MATCH LINE STA. 2022+89 SHEET 12
MATCH LINE STA. 203+00 SHEET 10
FLUME
OVERHEAD SIGN
RAMP W
RAMP SW
710
264 W.B.L.
264 E.B.L.
1430
1435
P.C.
P.C.C.
DITCH
BRUSH
EXP. JT
RAMP SE
16
10
2020
14'
FACE OF BACKWALL
BEGIN BRIDGE
STA. 204+74.60
P.O.C. 1432+21.57 I-264
P.O.C. 2020+16.36 CD (74' RT.)
P.T. 205+07.11 RAMP SE (86' RT.)
Δ=02° 18' 19"
D=01° 17' 08"
T=89.67'
L=179.31'
R=4456.77'
P.C. 2019+87.72
P.I. 2020+77.39
P.T. 2021+67.03
Δ=63° 46' 22"
D=24° 54' 40"
T=143.09'
L=256.00'
R=230.00'
P.C. 202+51.11
P.I. 203+94.20
P.T. 205+07.11
Δ=02° 18' 19"
D=01° 15' 53"
T=91.16'
L=182.29'
R=4530.77'
P.C. 1431+92.45
P.I. 1432+83.61
P.T. 1433+74.75
Δ=19° 48' 40"
D=02° 17' 42"
T=435.98'
L=863.26'
R=2496.65'
P.C. 1433+74.75
P.I. 1438+10.73
P.T. 1442+38.01
SCALE
0 25 50
T:81500S\REPORT\PLAN09

MARTIN LUTHER KING FREEWAY SHEET 10

STA 302+10 TO STA 1001+00

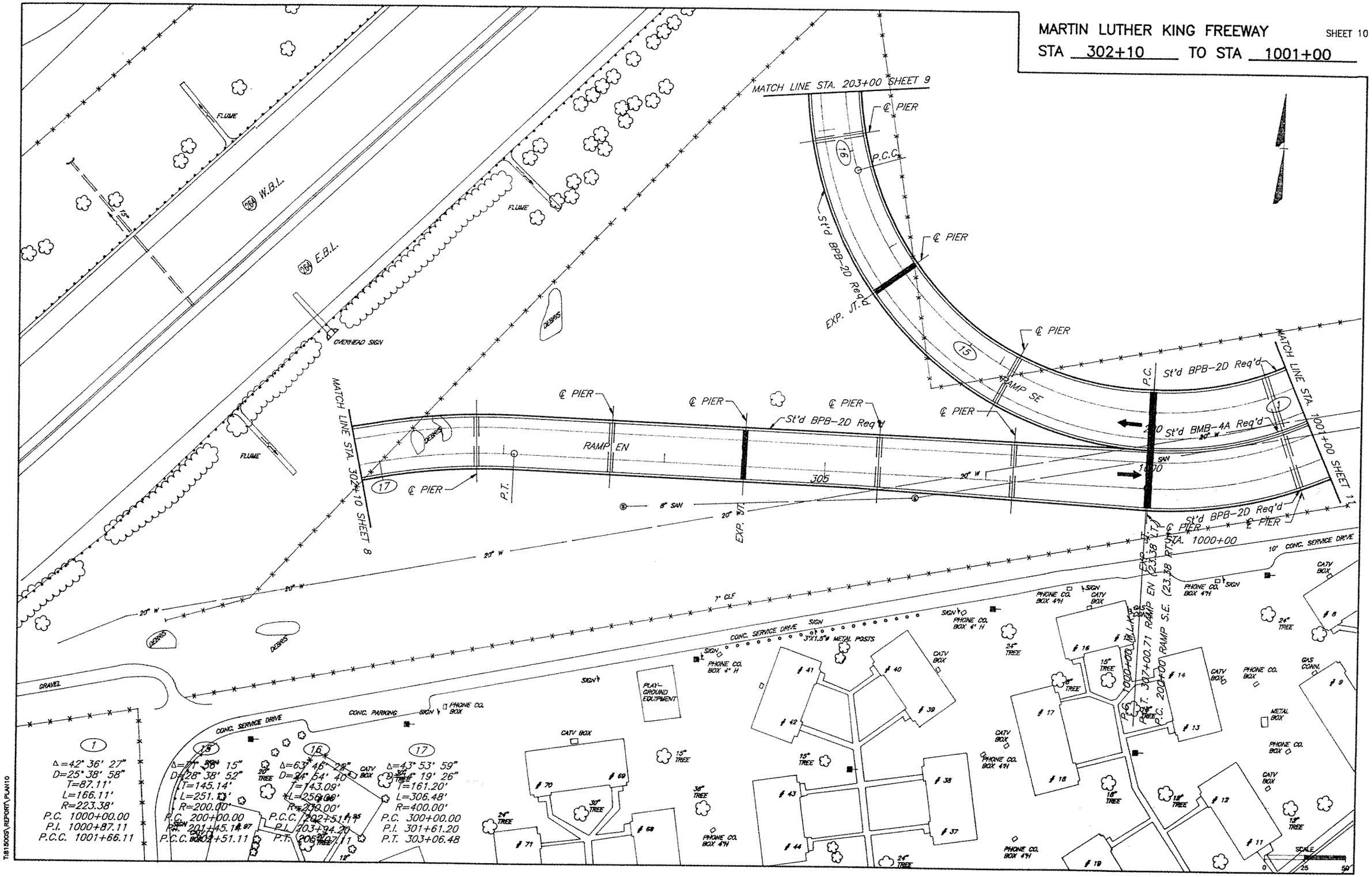


T:\81500S\REPORT\PLAN10

NOTE:
1. Preliminary easements for utility relocations are approximate only and subject to change as project design is finalized

MARTIN LUTHER KING FREEWAY

SHEET 11

STA 1001+00 TO STA 1006+00

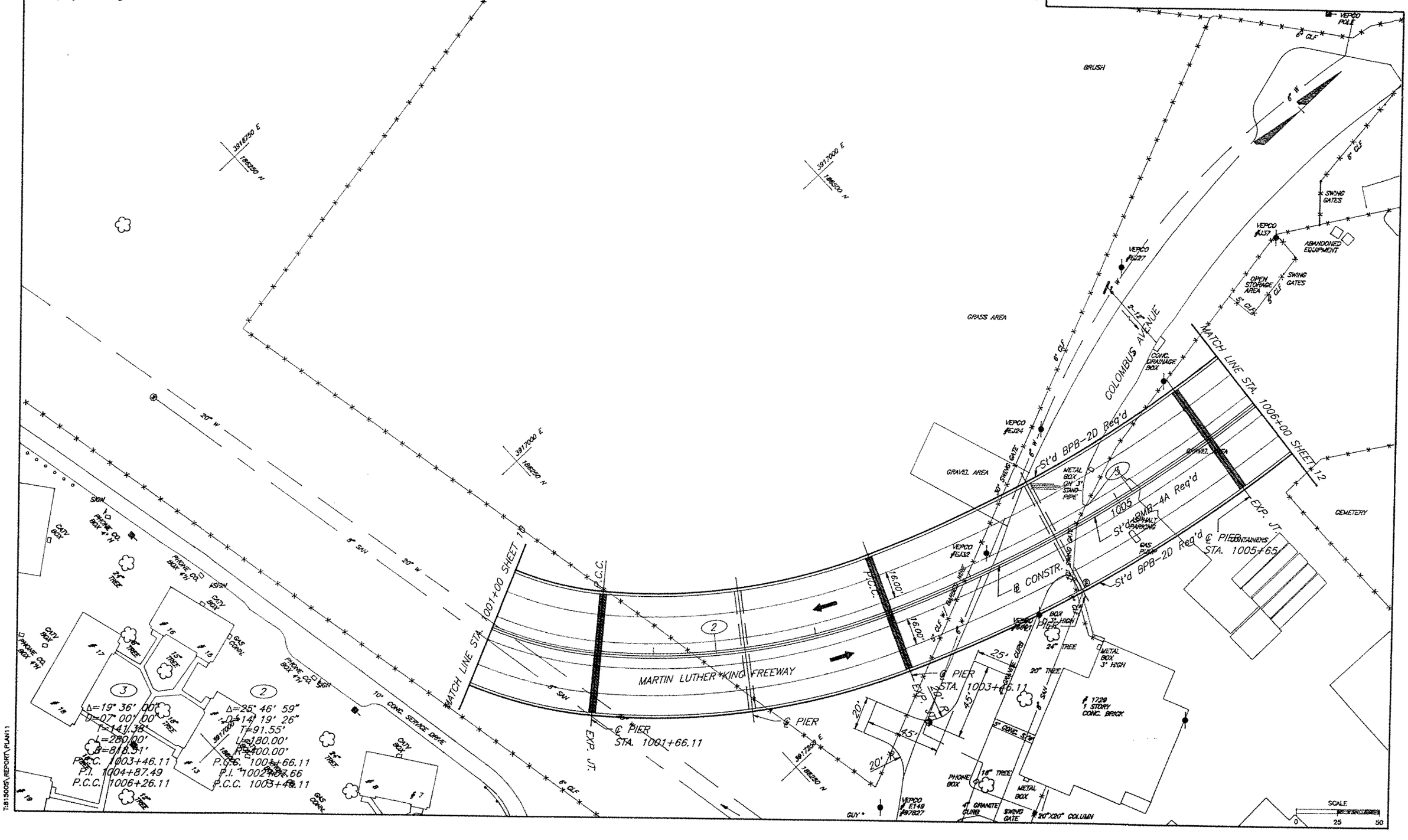


T:815005\REPORT\PLAN11

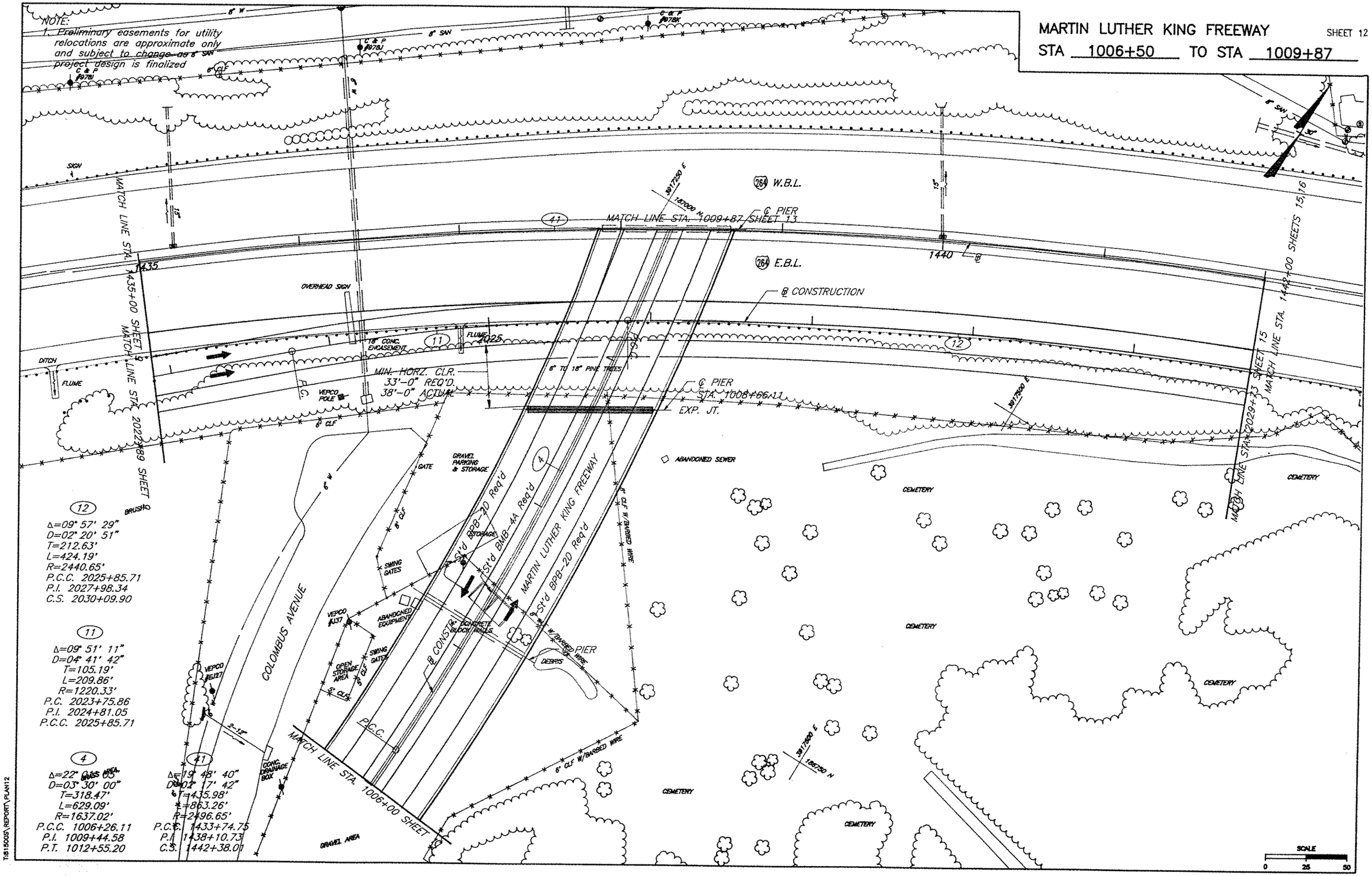
MARTIN LUTHER KING FREEWAY
SHEET 12
STA 1006+50 TO STA 1009+87
NOTE:
1. Preliminary easements for utility relocations are approximate only and subject to change as project design is finalized
MATCH LINE STA. 1009+87 SHEET 13
MATCH LINE STA. 1435+00 SHEET 9
MATCH LINE STA. 2022+89 SHEET
MATCH LINE STA. 2029+73 SHEET 15
MATCH LINE STA. 1442+00 SHEETS 15,16
MATCH LINE STA. 1006+00 SHEET
W.B.L.
E.B.L.
℄ PIER
℄ CONSTRUCTION
℄ PIER
STA. 1008+66.11
EXP. JT.
MIN. HORZ. CLR.
33'-0" REQ'D.
38'-0" ACTUAL
COLOMBUS AVENUE
MARTIN LUTHER KING FREEWAY
St'd BPB-2D Req'd
St'd BMB-4A Req'd
St'd BPB-2D Req'd
℄ CONSTR.
PIER
DEBRIS
GRAVEL PARKING & STORAGE
ABANDONED SEWER
ABANDONED EQUIPMENT
OPEN STORAGE AREA
CONC. DRAINAGE BOX
GRAVEL AREA
CEMETERY
OVERHEAD SIGN
DITCH
FLUME
VEPCO POLE
SWING GATES
GATE
BRUSH
SIGN
SCALE
0 25 50
12
Δ=09° 57' 29"
D=02° 20' 51"
T=212.63'
L=424.19'
R=2440.65'
P.C.C. 2025+85.71
P.I. 2027+98.34
C.S. 2030+09.90
11
Δ=09° 51' 11"
D=04° 41' 42"
T=105.19'
L=209.86'
R=1220.33'
P.C. 2023+75.86
P.I. 2024+81.05
P.C.C. 2025+85.71
4
Δ=22° 01' 05"
D=03° 30' 00"
T=318.47'
L=629.09'
R=1637.02'
P.C.C. 1006+26.11
P.I. 1009+44.58
P.T. 1012+55.20
41
Δ=19° 48' 40"
D=02° 17' 42"
T=435.98'
L=863.26'
R=2496.65'
P.C.C. 1433+74.75
P.I. 1438+10.73
C.S. 1442+38.01
T:81500S\REPORT\PLAN12

MARTIN LUTHER KING FREEWAY SHEET 13

STA 1009+87 TO STA 1014+50

NOTE:
1. Preliminary easements for utility relocations are approximate only and subject to change as project design is finalized

(31) Δ=100° 26' 39" D=40° 57' 44" T=168.01' L=245.21' R=139.87' P.C. 9+94.55 P.I. 11+62.56 P.T. 12+39.76

(23) Δ=73° 59' 54" D=12° 00' 00" T=359.78' L=676.65' R=477.46' P.C. 701+08.12 P.I. 704+67.90 P.T. 707+24.78

(14) Δ=65° 21' 03" D=11° 00' 00" T=334.08' L=594.10' R=520.87' P.C. 100+00.00 P.I. 103+34.08 P.T. 106+94.10

(34) Δ=68° 19' 42" D=28° 38' 52" T=135.74' L=238.51' R=200.00' P.C. 22+34.37 P.I. 23+70.11 P.T. 24+72.88

(79) Δ=83° 54' 23" D=10° 00' 00" T=514.60' L=838.57' R=572.96' P.C. 408+00.00 P.I. 411+14.60 P.T. 414+38.57

(11) Δ=09° 51' 11" D=04° 41' 42" T=105.19' L=209.86' R=1220.33' P.C. 2023+75.86 P.I. 2024+81.05 P.T. 2025+85.71

(4) Δ=22° 01' 05" D=08° 30' 00" T=318.47' L=629.09' R=1637.02' P.C. 1006+26.11 P.I. 1009+44.58 P.T. 1012+55.20

P.O.T. 1014+44.38 M.L.K.F.
P.C. 100+00 RAMP SW (43.38' LT.)

MATCH LINE STA. 1014+50 SHEET 14
MATCH LINE STA. 13+50 SHEET 14
MATCH LINE STA. 702+00 SHEET 14
MATCH LINE STA. 411+50 SHEET 14
MATCH LINE STA. 21+50 SHEET 14
MATCH LINE STA. 23+00 SHEET 16
MATCH LINE STA. 409+00 SHEET 16
MATCH LINE STA. 707+25 SHEET 9
MATCH LINE STA. 1435+00 SHEET 9
MATCH LINE STA. 1009+87 SHEET 12
SHEETS 15,16

FACE OF BACKWALL BEGIN BRIDGE STA. 702+48.75
FACE OF BACKWALL END OF BRIDGE STA. 705+00

MARTIN LUTHER KING FREEWAY
COLUMBUS AVENUE
RAMP SW
RAMP WN
ENTRANCE ROAD
L & CONSTR.
EXP. JT.
℄ PIER
P.I.
P.C.
P.T.
Mod. CG-6 Req'd
St'd BPB-2D Req'd
St'd BMB-4A Req'd
St'd BRB-2D Req'd
150' Taper
180' Taper @ 45:1
360' Taper @ 30:1
MIN. HORZ. CLR. 33'-0" REQ'D. 76'-0" ACTUAL
MIN. VERT. CLR. 16'-6" REQ'D. 17'-5" ACTUAL
(264) W.B.L.
(264) E.B.L.
OPEN STORAGE
STORAGE AREA
DEBRIS
PAVED DITCH
CONC. PAD
BASKETBALL HOOP
CONTAINERS
TRAILERS
ASPHALT DRIVEWAY
SWING GATE
CONC. BOX W/MH ACCESS
PHONE CO. BOX C&P 3204
SMALL TREE
GAS POLE 3' HIGH
DIVERSIFIED INSULATION SERVICES FOUNDATION FOR ALUMINUM SIDING BUILDING
6" CLF
6" CLF W/ BARBED WIRE
6" SAN
8" SAN
6" W
8" W
SIGN
GUY
VEPCO #E100
VEPCO #E116
VEPCO #E118
VEPCO #978K
VEPCO #978N
C & P #978L
N 187250
E 3817000

SCALE 25 50

T:\81500S\REPORT\PLAN13

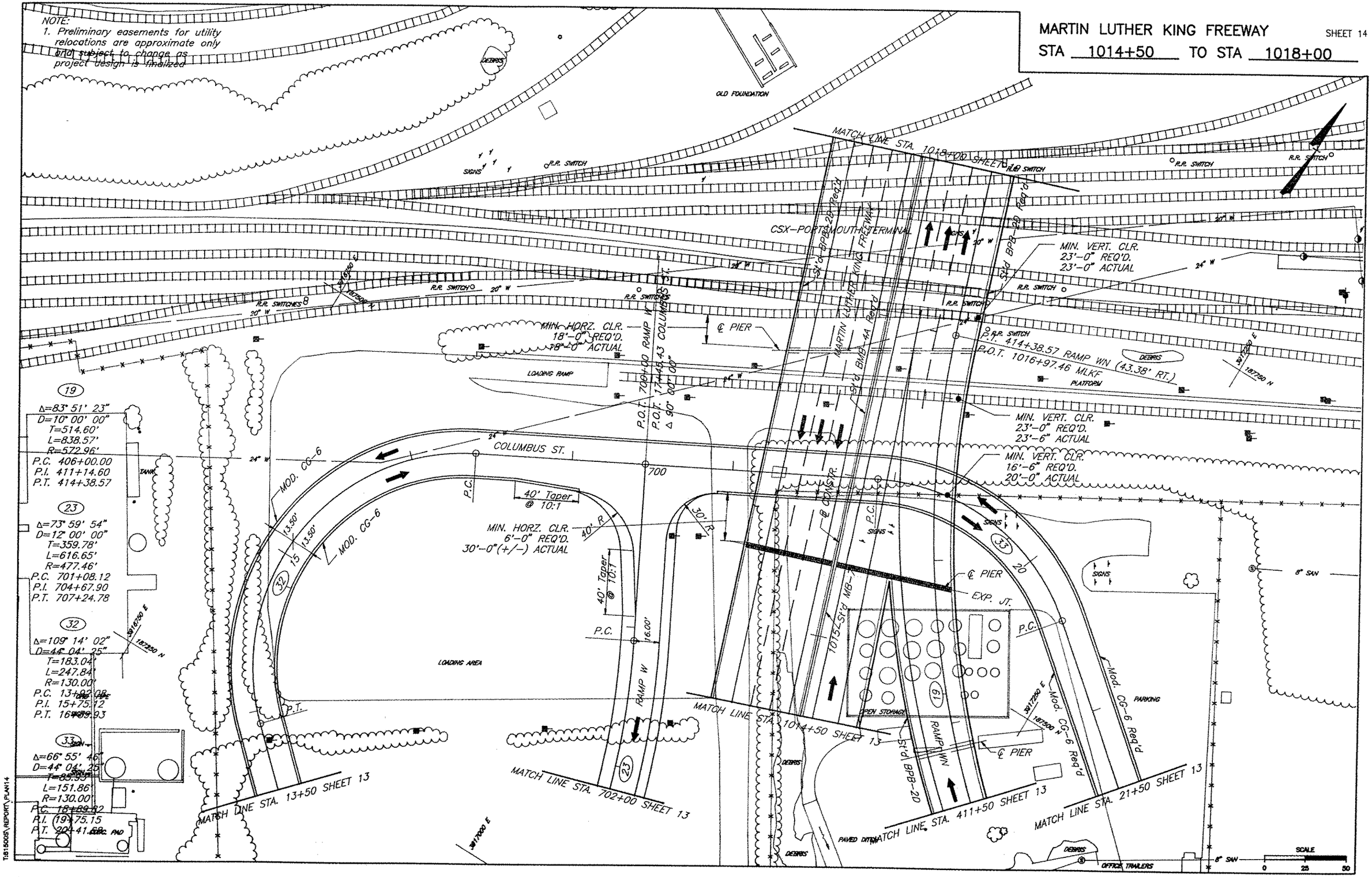
MARTIN LUTHER KING FREEWAY
SHEET 14
STA 1014+50 TO STA 1018+00
NOTE:
1. Preliminary easements for utility relocations are approximate only and subject to change as project design is finalized
OLD FOUNDATION
MATCH LINE STA. 1018+00 SHEET 10
CSX-PORTSMOUTH TERMINAL
MARTIN LUTHER KING FREEWAY
MIN. VERT. CLR. 23'-0" REQ'D. 23'-0" ACTUAL
MIN. HORZ. CLR. 18'-0" REQ'D. 18'-0" ACTUAL
℄ PIER
P.T. 414+38.57 RAMP WN (43.38' RT.)
P.O.T. 1016+97.46 MLKF
MIN. VERT. CLR. 23'-0" REQ'D. 23'-6" ACTUAL
MIN. VERT. CLR. 16'-6" REQ'D. 20'-0" ACTUAL
P.O.T. 700+00 RAMP W
P.O.T. 17+45.43 COLUMBUS ST.
Δ 90° 00' 00"
COLUMBUS ST.
MOD. CG-6
40' Taper @ 10:1
MIN. HORZ. CLR. 6'-0" REQ'D. 30'-0"(+/-) ACTUAL
℄ PIER
EXP. JT.
LOADING AREA
RAMP W
MATCH LINE STA. 1014+50 SHEET 13
MATCH LINE STA. 13+50 SHEET 13
MATCH LINE STA. 702+00 SHEET 13
MATCH LINE STA. 411+50 SHEET 13
MATCH LINE STA. 21+50 SHEET 13
OPEN STORAGE
PARKING
OFFICE TRAILERS
SCALE
0 25 50
T:81500S\REPORT\PLAN14

NOTE:
1. Preliminary easements for utility relocations are approximate only and subject to change as project design is finalized

# MARTIN LUTHER KING FREEWAY

SHEET 15

STA 2029+73 TO STA 2036+50

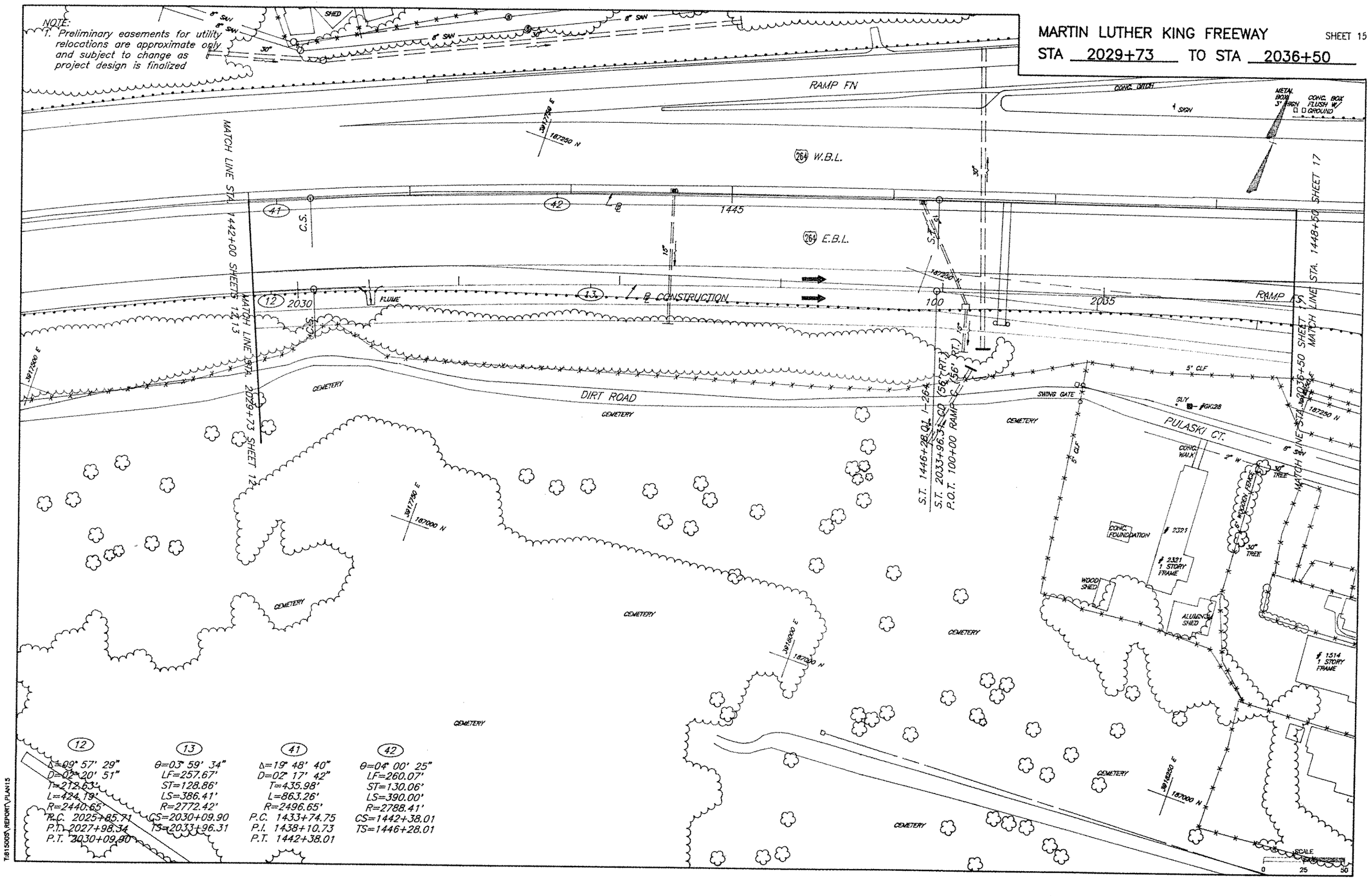


| (12) | (13) | (41) | (42) |
|---|---|---|---|
| Δ=09° 57' 29" | θ=03° 59' 34" | Δ=19° 48' 40" | θ=04° 00' 25" |
| D=02° 20' 51" | LF=257.67' | D=02° 17' 42" | LF=260.07' |
| T=212.63' | ST=128.86' | T=435.98' | ST=130.06' |
| L=424.19' | LS=386.41' | L=863.26' | LS=390.00' |
| R=2440.65' | R=2772.42' | R=2496.65' | R=2788.41' |
| P.C. 2025+85.71 | CS=2030+09.90 | P.C. 1433+74.75 | CS=1442+38.01 |
| P.I. 2027+98.34 | TS=2033+96.31 | P.I. 1438+10.73 | TS=1446+28.01 |
| P.T. 2030+09.90 | | P.T. 1442+38.01 | |

T:\81500S\REPORT\PLAN15

NOTE:
1. Preliminary easements for utility relocations are approximate only and subject to change as project design is finalized

MARTIN LUTHER KING FREEWAY SHEET 16
STA 1442+00 TO STA 1448+50

COLUMBUS AVENUE
COLUMBUS ST.
MATCH LINE STA. 23+00 SHEET 13
MATCH LINE STA. 1442+00 SHEETS 17 & 18
MATCH LINE STA. 403+00 SHEET 17
MATCH LINE STA. 1448+50 SHEET 17
MATCH LINE SHEET 15
Mod. CG-6 Req'd
Std BPB-2D Req'd
P.T. 24 + 72.88
ABUTMENT 5 EX. P.T. 407+15.00
C.S.
I-264
W.B.L.
E.B.L.
120' Taper @ 30:1
360' Taper @ 30:1
1405 RAMP WW
1405 RAMP FN
SATELLITE DISH
CONC. BASE
TOWER
1 STORY CONC. BUILD.
SWING GATE
OFFICE TRAILERS
CONTAINERS
CONC. PAD
BASKETBALL HOOD
GRAVEL DRIVEWAY
ASPH. DRIVEWAY
SIGN
GUY
6" CLF W/ BARBED WIRE
CONC. BOX W/ RAM ACCESS
VEPCO #JL83
VEPCO #JL19
VEPCO #5203
VEPCO #5201
VEPCO #5202
VEPCO #5102
VEPCO #5145
8"X8" METAL PLATE IN-LET
PHONE CO. BOX C&P 3204
BRICK STEPS
SMALL TREE
CONC. DRIVEWAY
CARPORT
GRASS
GONC. PAD
ALUMINUM SHED
WOOD SHED
SHED
CONC. WALK
CONC.
DIRT DRIVEWAY
GRAVEL
CONC. DITCH
FLUME
REFLECTIVE MARKERS FLUSH W/S PVMT.
METAL BOX 3" HIGH
CONC. BOX FLUSH W/ GROUND
WOODEN FENCE
WOODEN FENCE W/ STONE POSTS
# 1403 1 STORY BRICK+ ALUMINUM SIDING
# 1407 1 STORY ALUMINUM SIDING
# 1405 1 STORY ALUMINUM SIDING
# 1401 1 STORY ALUMINUM SIDING
# 1411 1 STORY BRICK & ALUM.
# 1409 1 STORY ALUMINUM SIDING
# 1413
# 1415
# 1860 2 STORY ALUM. SIDING
# 2318 2 STORY FRAME
# 1305 1 STORY FRAME
# 1303 1 STORY ALUMINUM SIDING
# 1301 2 STORY ALUMINUM SIDING
2-8" TRUNKS
2 USED TO BE
10" PINE
8" PINE
12" PINE
24" TREE
30" TREE
18" TREE
15" TREE
12" TREE
10" TREE
6" TREE
3" TREE
3-6" TREES
8" SAN
6" W
3" CLF
5' CLF
8" CLF

(19)
Δ=83° 51' 23"
D=10° 00' 00"
T=514.60'
L=838.57'
R=572.96'
P.C. 406+00.00
P.I. 411+14.60
P.T. 414+38.57

(34)
Δ=68° 19' 42"
D=28° 38' 52"
T=135.74'
L=238.51'
R=200.00'
P.C. 22+34.37
P.I. 23+70.11
P.T. 24+72.88

(18)
Δ=05° 00' 00"
D=00° 49' 60"
T=300.19'
L=600.00'
R=6875.49'
P.C. 400+00.00
P.I. 403+00.19
P.T. 406+00.00

SCALE
0 25 50

T:\815005\REPORT\PLAN16

MARTIN LUTHER KING FREEWAY SHEET 17

STA 1448+50 TO STA 1455+00

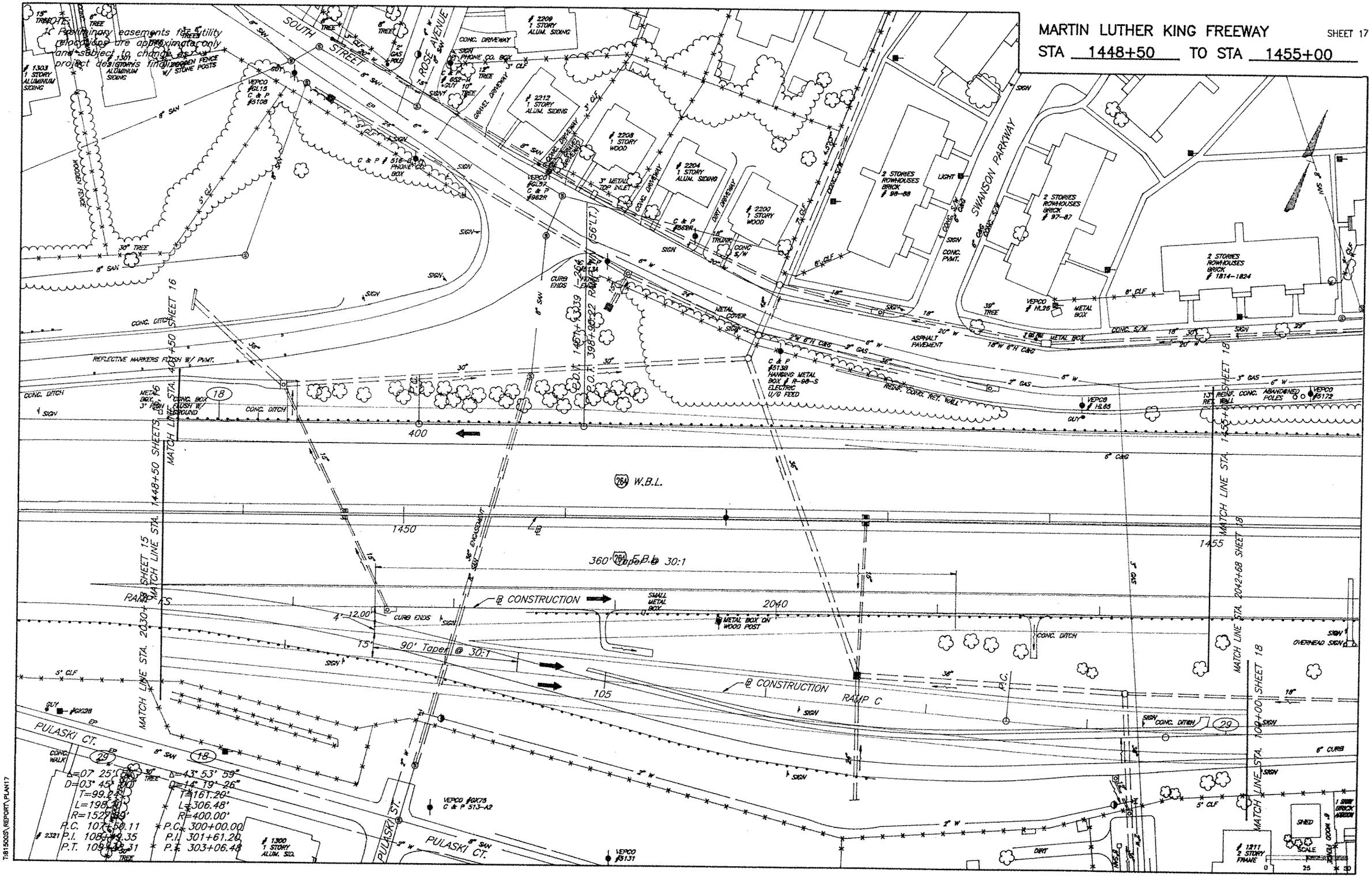


T:\81500S\REPORT\PLAN17

MARTIN LUTHER KING FREEWAY SHEET 18

STA 1455+00 TO STA 1458+22.96

NOTE:
1. Preliminary easements for utility relocations are approximate only and subject to change as project design is finalized.

BASKETBALL COURT
SIGN
30" TREE
PARKING
2 STORIES ROWHOUSES BRICK # 1804-1810
2 STORIES ROWHOUSES BRICK # 1814-1824
WOOD POLE
CONC. PAVT. 5" CLF
SWANSON HOMES OFFICE 1 STORY BRICK
2 STORIES ROW HOUSES BRICK
BUCHANAN
LANSING AVENUE
PARKING
2" POST'S
W/W's
SOUTH STREET
2" METAL POSTS
CONC. WALK
MAILBOX
PAVED OVER CURB
VEPCO #4808
CONC. SW
6" CURB AND GUTTER
2.5" H METAL POSTS
6" CLF
4' CLF
20" W
6" W
8" SAN
8" SW
3" GAS
CONC. SW
VEPCO
13" REINF. CONC. RET. WALL
REINF. CONC. ABANDONED POLES
VEPCO #5172
MATCH LINE STA. 1455+00 SHEET 17
MATCH LINE STA. 2042+68 SHEET 17
MATCH LINE STA. 109+00 SHEET 17
CONC. BARRIER
W.B.L.
END OF BRIDGE STA. 1458+22.96
N 71° 59' 11"E
BEGIN BRIDGE STA. 1456+97.75
E.B.L.
℄ CONSTRUCTION
1455
1460
2045
2050
OVERHEAD SIGN
MIN. VERT. CLR. 14'-6" REQ'D. 14'-6" ACTUAL
MIN. HORZ. CLR. 6'-0" REQ'D. 12'-0" ACTUAL 12'-0" EXIST.
MIN. HORZ. CLR. 6'-0" REQ'D. 8'-0" ACTUAL 8'-0" EXIST.
TOWER LIGHT
RAMP C
N 69° 33' 14"E
110
29
Δ=07° 25' 57"
D=03° 45' 00"
T=99.84'
L=195.20'
R=1527.89'
PC 107+50.11
PI 108+49.35
PT 109+48.31
DES MOINES AVENUE
P.O.T.
# 1211 2 STORY FRAME
# 1220 1 STORY BRICK
# 1411 2 STORY WOOD DUPLEX
# 1413
# 1415 1 STORY WOOD
1 STORY ALUMINUM ADDITION
CARPORT
CONC. DRIVEWAY
CONC. WALK
GRAVEL WALK
SHED
SMALL TREE
TREE
STUMP
GUY
SCALE 0 25 50

T:\81500S\REPORT\PLAN18

MARTIN LUTHER KING FREEWAY SHEET 19

STA 1018+00 TO STA 1025+00

NOTE:
1. Preliminary easements for utility relocations are approximate only and subject to change as project design is finalized

CSX-PORTSMOUTH TERMINAL

MIN. HORZ. CLR.
18'-0" REQ'D.
18'-0" ACTUAL

MIN. HORZ. CLR.
18'-0" REQ'D.
20'-0" ACTUAL

MIN. HORZ. CLR.
18'-0" REQ'D.
18'-0" ACTUAL

MIN. HORZ. CLR.
18'-0" REQ'D.
18'-0" ACTUAL

MIN. HORZ. CLR.
18'-0" REQ'D.
27'-0" ACTUAL

MIN. VERT. CLR.
23'-0" REQ'D.
25'-9" ACTUAL

℄ PIER

℄ PIER STEEL CAP BENT

MARTIN LUTHER KING FREEWAY

Std. MB-7A

1020

P.C.

P.I.

P.R.

EXP. JT.

O.P.R. SWITCH

OLD FOUNDATION

DIRT ROAD

TANK

CONVEYOR BELT

CONVEYOR

BUILDING

CONC. PAD

DEBRIS

RAMP

RAILING

GUY

SIGN

HOLMES 24

HOLMES 25

HOLMES 26

MATCH LINE STA 1018+00 SHEET 20

MATCH LINE STA 1025+00 SHEET 20

1882500 N
3916750 E

1882500 N
3917000 E

5

Δ=16° 12' 08"
D=03° 30' 00"
T=233.01'
L=462.92'
R=1637.02'
P.C. 1021+82.79
P.I. 1024+15.80
P.T. 1026+45.71

SCALE
0 25 50

T:\81500S\REPORT\PLAN19

NOTE:
1. Preliminary easements for utility relocations are approximate only and subject to change as project design is finalized

# MARTIN LUTHER KING FREEWAY

SHEET 20

STA 1025+00 TO STA 1031+50

MIN. HORZ. OPENING
(PER VDOT LETTER DATED 3/31/92)
80'-0" REQ'D.
100'-0" PROVIDED

MIN. VERT. CLR.
14'-6" REQ'D.
19'-5" ACTUAL

MIN. VERT. CLR.
16'-6" REQ'D.
24'-6" ACTUAL
(TREGO STONE CORP.)

| (21) | (20) |
|---|---|
| Δ=05° 00' 00" | Δ=04° 56' 24" |
| D=03° 28' 28" | D=01° 00' 00" |
| T=72.00' | T=247.16' |
| L=143.90' | L=494.01' |
| R=1649.02' | R=5729.58' |
| P.C. 600+00.00 | P.C. 507+99.55 |
| P.I. 600+72.00 | P.I. 510+46.71 |
| P.T. 601+43.90 | P.T. 512+93.56 |

T:\81500S\REPORT\PLAN20

MARTIN LUTHER KING FREEWAY SHEET 22

STA 1031+50 TO STA 1037+50

NOTE:
1. Preliminary easements for utility relocations are approximate only and subject to change as project design is finalized

MATCH LINE STA. 507+50 SHEET 20

MATCH LINE STA. 1031+50 SHEET 20

MATCH LINE STA. 605+50 SHEET 20

MATCH LINE STA. 502+00 SHEET 23

MATCH LINE STA. 1037+50 SHEET 23

MATCH LINE STA. 612+00 SHEET 23

MATCH LINE SHEET 21

VEPCO

ROOF DRAIN

C & P # 6828

C & P # 6828A

C & P # 6830

C & P # 6830F

C & P # 6831

C & P # 6831A

C & P # 6831B

C & P # 6831C

C & P # 6831D

C & P # 6831E

C & P # 6831F

C & P # 6831G

C & P # 6831H

C & P # 6831J

C & P # 6831K

C & P # 6831L

C & P # 6831M

C & P # 6831N

C & P # 6831P

C & P # 6831Q

C & P # 6831R

C & P # 6831S

C & P # 6831T

C & P # 6831U

C & P # 6831V

C & P # 6831W

C & P # 6831X

C & P # 6831Y

C & P # 6831Z

VEPCO # 6819-1

VEPCO # 6819-2

VEPCO # 6819-3

VEPCO # 6819-4

VEPCO # 6819-5

VEPCO # 6819-6

VEPCO # 6819-7

VEPCO # 6819-8

VEPCO # 6819-9

VEPCO # 6819-10

VEPCO # 6819-11

VEPCO # 6819-12

VEPCO # 6819-13

VEPCO #

MARTIN LUTHER KING FREEWAY SHEET 23

STA 1037+50 TO STA 1044+00

NOTE:
1. Preliminary easements for utility relocations are approximate only and subject to change as project design is finalized

HIGH STREET

QUEEN STREET

MACARTHUR AVENUE

HARBOR DRIVE

MARTIN LUTHER KING FREEWAY

MERRIMAC STREET

MATCH LINE STA. 501+00 SHEET 22

MATCH LINE STA. 612+00 SHEET 22

MATCH LINE STA. 1044+00 SHEET 24

P.O.T. 1039+45.91 M.L.K.F.

P.O.T. 499+70.00 RAMP S (68.96' LT.)

P.O.T. 1039+45.91 M.L.K.F.

P.O.T. 613+49.54 RAMP N (76.96' RT.)

RAMP S

RAMP N

23-04

23-05

23-06

23-07

23-08

23-09

23-10

23-03

MIN. VERT. CLR. 14'-6" REQ'D. 23'-5" ACTUAL

MIN. HORZ. CLR. 6'-0" REQ'D. 28'-0" ACTUAL

MIN. VERT. CLR. 14'-6" REQ'D. 17'-3" ACTUAL

MIN. HORZ. CLR. 6'-0" REQ'D. 27'-0" ACTUAL

MIN. HORZ. CLR. 6'-0" REQ'D. 28'-0" ACTUAL

MIN. HORZ. CLR. 6'-0" REQ'D. 27'-0" ACTUAL

6
Δ=31° 13' 38"
D=04° 30' 00"
T=355.62'
L=693.94'
R=1273.24'
P.C. 1040+15.86
P.I. 1043+71.68
P.T. 1047+09.80

SCALE 0 25 50

T:\81500S\REPORT\PLAN23

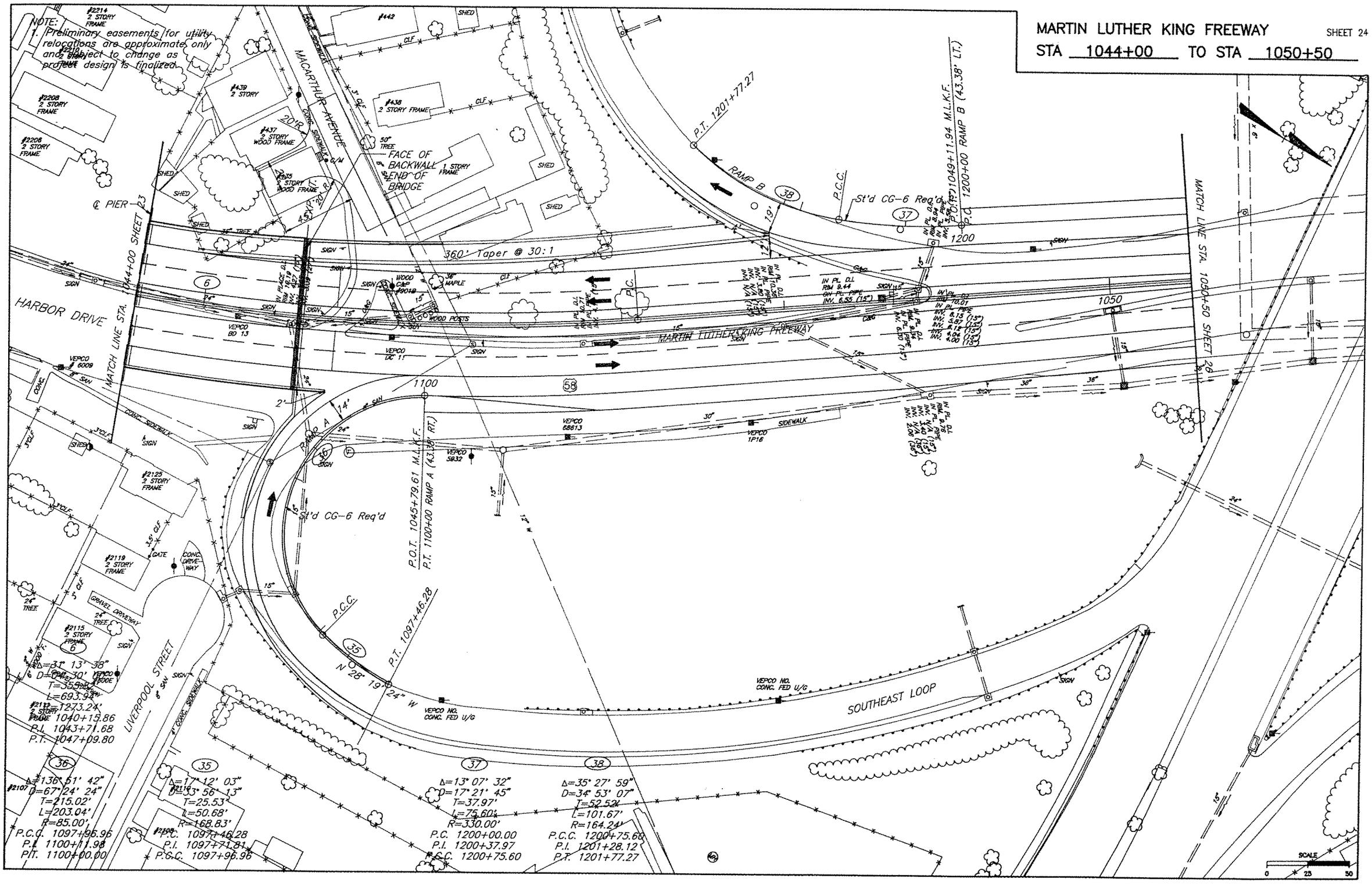
MARTIN LUTHER KING FREEWAY
SHEET 24
STA 1044+00 TO STA 1050+50
NOTE:
1. Preliminary easements for utility relocations are approximate only and subject to change as project design is finalized.
MACARTHUR AVENUE
FACE OF BACKWALL END OF BRIDGE
℄ PIER
HARBOR DRIVE
MATCH LINE STA. 1044+00 SHEET 23
MATCH LINE STA. 1050+50 SHEET 26
360' Taper @ 30:1
MARTIN LUTHER KING FREEWAY
RAMP B
RAMP A
P.T. 1201+77.27
P.C.C.
St'd CG-6 Req'd
P.O.T. 1045+79.61 M.L.K.F.
P.T. 1100+00 RAMP A (43.38' RT.)
P.O.T. 1049+11.94 M.L.K.F.
P.C. 1200+00 RAMP B (43.38' LT.)
P.T. 1097+46.28
N 28° 19' 24" W
SOUTHEAST LOOP
LIVERPOOL STREET
GRAVEL DRIVEWAY
CONC. DRIVEWAY
CONC. SIDEWALK
SIDEWALK
VEPCO NO. CONC. FED U/G
Δ=31° 13' 38"
D=04° 30'
T=355.84'
L=693.94'
R=1273.24'
P.I. 1040+15.86
P.I. 1043+71.68
P.T. 1047+09.80
Δ=136° 51' 42"
D=67° 24' 24"
T=215.02'
L=203.04'
R=85.00'
P.C.C. 1097+96.96
P.I. 1100+11.98
P.T. 1100+00.00
Δ=17° 12' 03"
D=33° 56' 13"
T=25.53'
L=50.68'
R=168.83'
P.C. 1097+46.28
P.I. 1097+71.81
P.C.C. 1097+96.96
Δ=13° 07' 32"
D=17° 21' 45"
T=37.97'
L=75.60'
R=330.00'
P.C. 1200+00.00
P.I. 1200+37.97
P.C.C. 1200+75.60
Δ=35° 27' 59"
D=34° 53' 07"
T=52.52'
L=101.67'
R=164.24'
P.C.C. 1200+75.60
P.I. 1201+28.12
P.T. 1201+77.27
SCALE
0 25 50
T:815005\REPORT\PLAN24

| FHWA REGION | STATE | FEDERAL AID ROUTE | FEDERAL AID PROJECT | STATE ROUTE | STATE PROJECT | SHEET NO |
|---|---|---|---|---|---|---|
| 3 | VA | | | 58 | 0058-965-104 | |

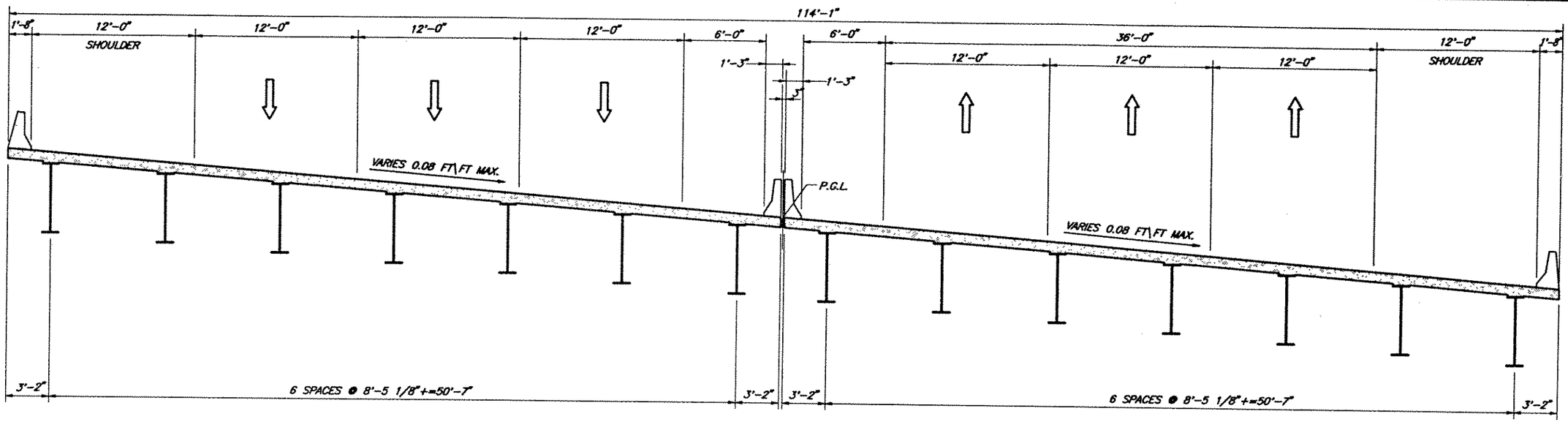


## MARTIN LUTHER KING FREEWAY

STATION 1016+00 TO STATION 1025+25
SCALE: 1/8"=1'-0"

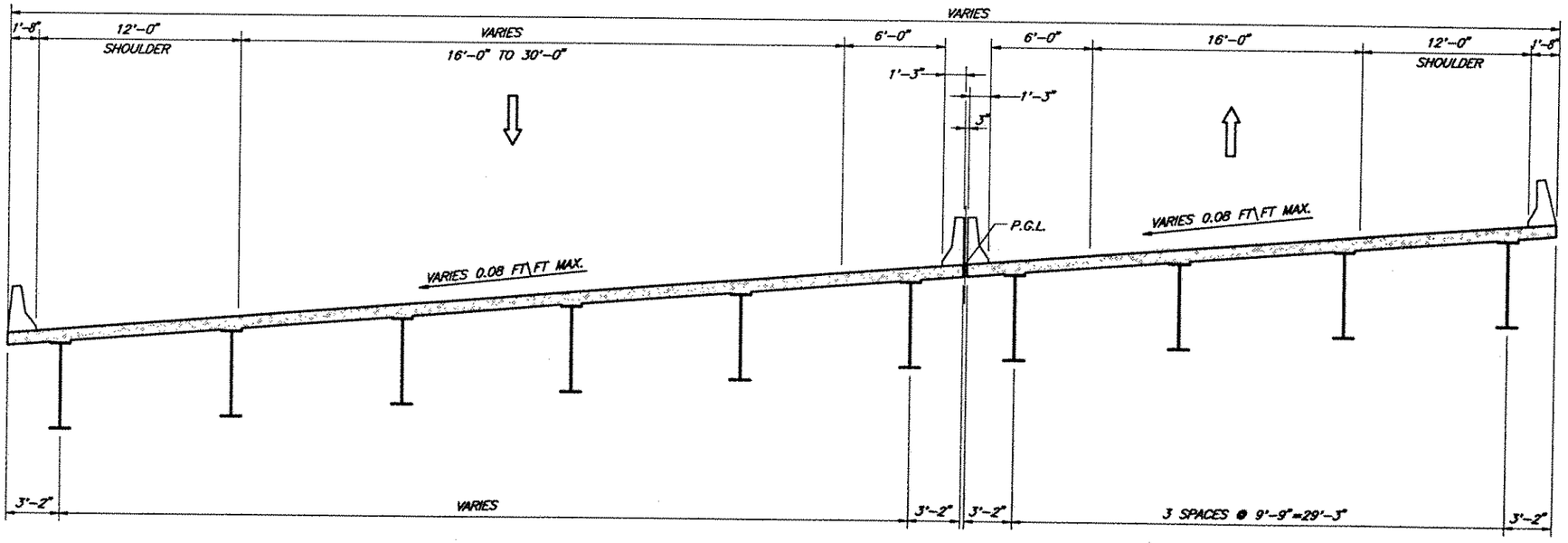


## MARTIN LUTHER KING FREEWAY

STATION 1008+25 TO STATION 1012+55
SCALE: 1/8"=1'-0"

| No | Description | Date |
|---|---|---|
| | Revisions | |

© 1992, Commonwealth of Virginia

COMMONWEALTH OF VIRGINIA
DEPARTMENT OF HIGHWAYS AND TRANSPORTATION
STRUCTURE AND BRIDGE DIVISION

# TYPICAL CROSS SECTIONS ALTERNATE 1

| Designed: — | Date | Plan No. | Sheet No. |
|---|---|---|---|
| Drawn: MS | JAN. 1993 | | 1 of 18 |
| Checked: — | | | |

T:\81500S\REPORT\ALT-1.DWG

| FHWA REGION | STATE | FEDERAL AID ROUTE | FEDERAL AID PROJECT | STATE ROUTE | STATE PROJECT | SHEET NO |
|---|---|---|---|---|---|---|
| 3 | VA | | | 58 | 0058-965-104 | |

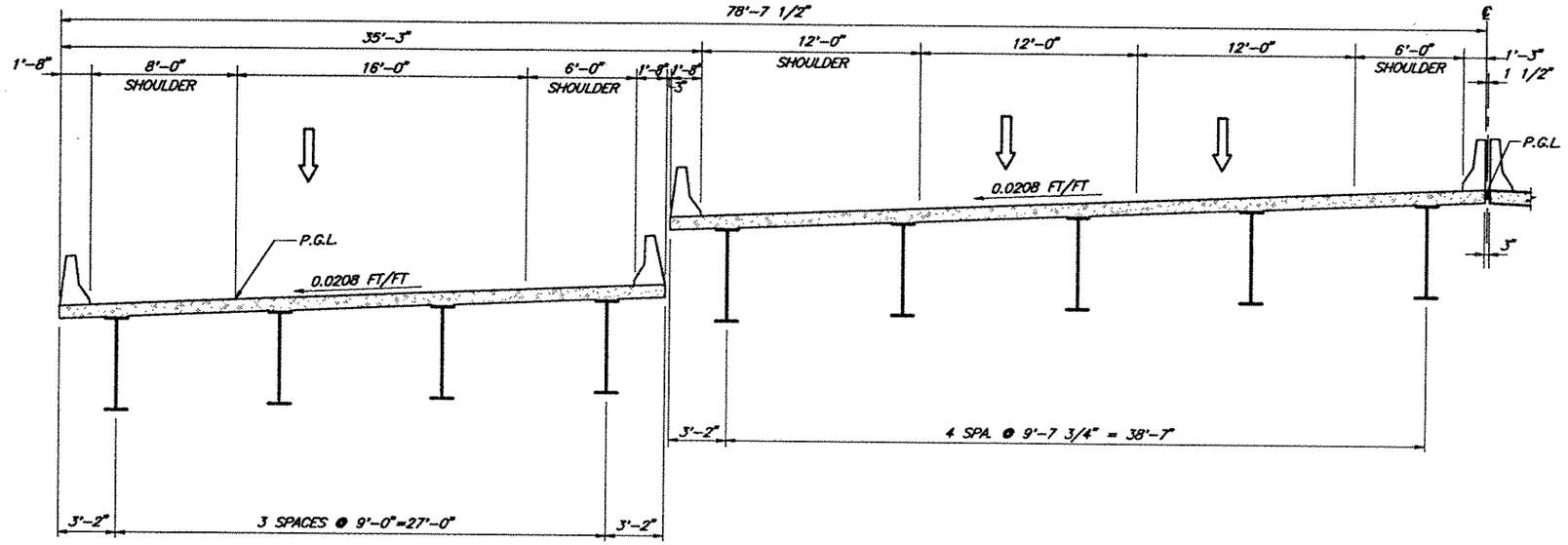


## RAMP S

STATION 502+00 TO STATION 507+50

## MARTIN LUTHER KING FREEWAY SOUTH BOUND LANES

STATION 1038+80 TO STATION 1032+00
SCALE: 1/8"=1'-0"

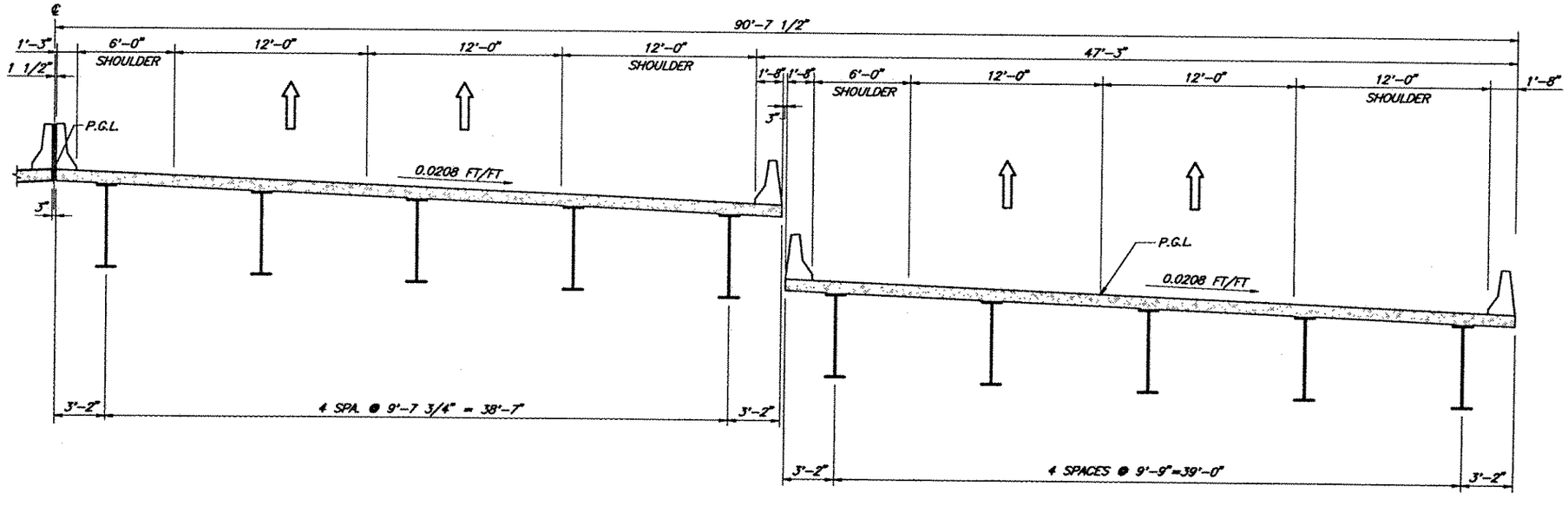


## MARTIN LUTHER KING FREEWAY NORTH BOUND LANES

STATION 1033+80 TO STATION 1038+00
SCALE: 1/8"=1'-0"

## RAMP N

STATION 502+00 TO STATION 507+50

© 1992, Commonwealth of Virginia

| No | Description | Date |
|---|---|---|
| | Revisions | |

COMMONWEALTH OF VIRGINIA
DEPARTMENT OF HIGHWAYS AND TRANSPORTATION
STRUCTURE AND BRIDGE DIVISION

# TYPICAL CROSS SECTIONS ALTERNATE 1

| Designed: — | Date | Plan No. | Sheet No. |
|---|---|---|---|
| Drawn: NS | JAN. 1993 | | 2 of 18 |
| Checked: — | | | |

I:\81300S\REPORT\ALT1-3.DGN

| FHWA REGION | STATE | FEDERAL AID ROUTE | FEDERAL AID PROJECT | STATE ROUTE | STATE PROJECT | SHEET NO |
|---|---|---|---|---|---|---|
| 3 | VA | | | 58 | 0058-965-104 | |

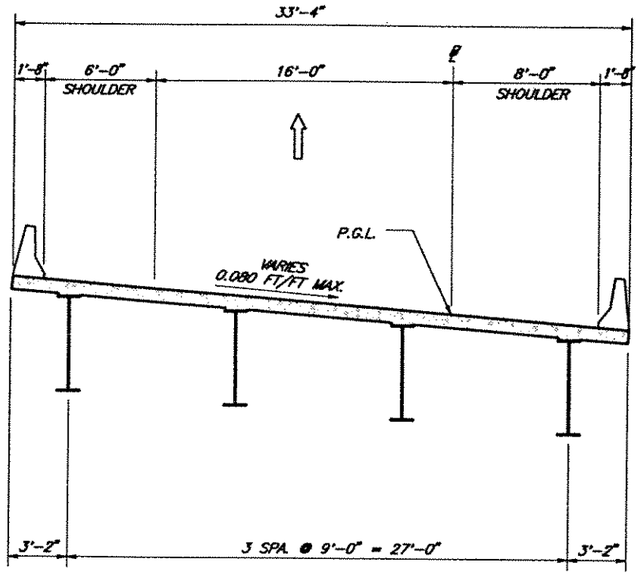


**RAMP "EN"**
STATION 302+00 TO STATION 306+00

AND

**RAMP "SE"**
STATION 200+50 TO STATION 203+80

SCALE: 1/8"=1'-0"

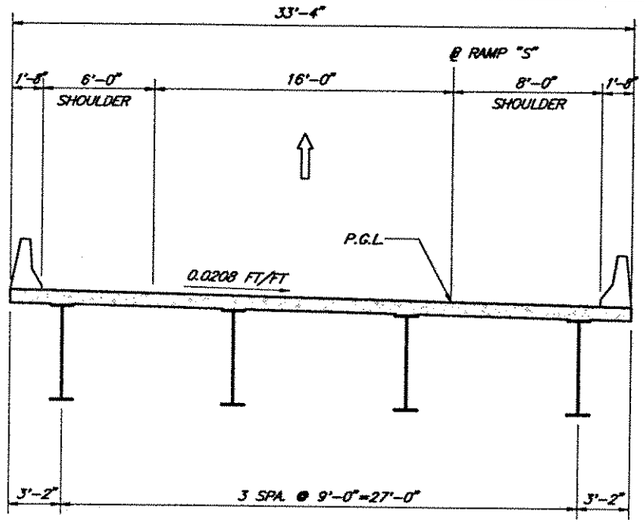


**RAMP "S"**
STATION 502+00 TO STATION 507+50
SCALE: 1/8"=1'-0"

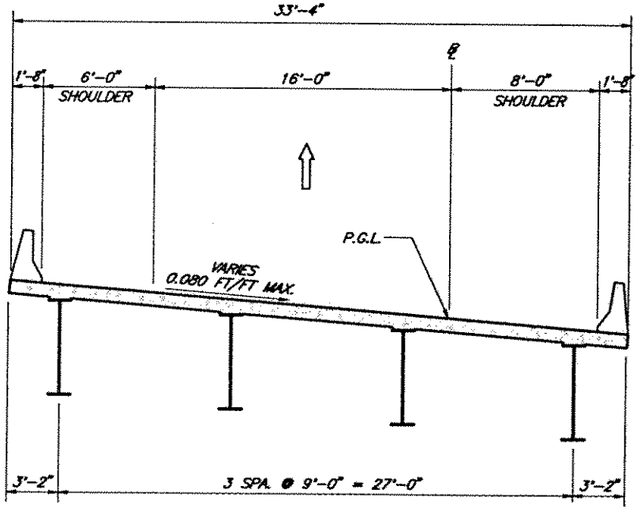


**RAMP "WN"**
STATION 407+30 TO STATION 412+30

AND

**RAMP "SW"**
STATION 102+30 TO STATION 104+80

AND

**RAMP "W"**
STATION 702+50 TO STATION 705+30

SCALE: 1/8"=1'-0"

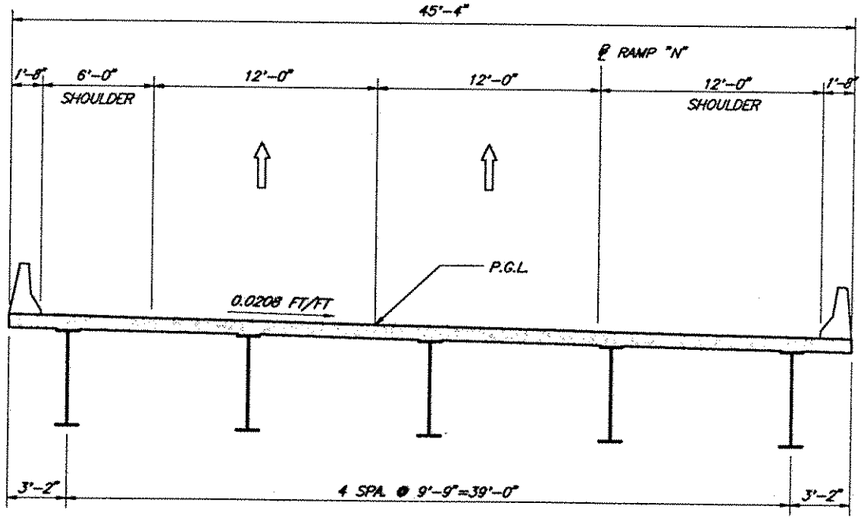


**RAMP "N"**
STATION 502+00 TO STATION 507+50
SCALE: 1/8"=1'-0"

| No | Description | Date |
|---|---|---|
| | Revisions | |

COMMONWEALTH OF VIRGINIA
DEPARTMENT OF HIGHWAYS AND TRANSPORTATION
STRUCTURE AND BRIDGE DIVISION

# TYPICAL CROSS SECTIONS ALTERNATE 1

| Designed: — | Date | Plan No. | Sheet No. |
|---|---|---|---|
| Drawn: NS | JAN. 1993 | | 3 of 18 |
| Checked: — | | | |

© 1992, Commonwealth of Virginia

| FHWA REGION | STATE | FEDERAL AID ROUTE | FEDERAL AID PROJECT | STATE ROUTE | STATE PROJECT | SHEET NO |
|---|---|---|---|---|---|---|
| 3 | VA | | | 58 | 0058-965-104 | |

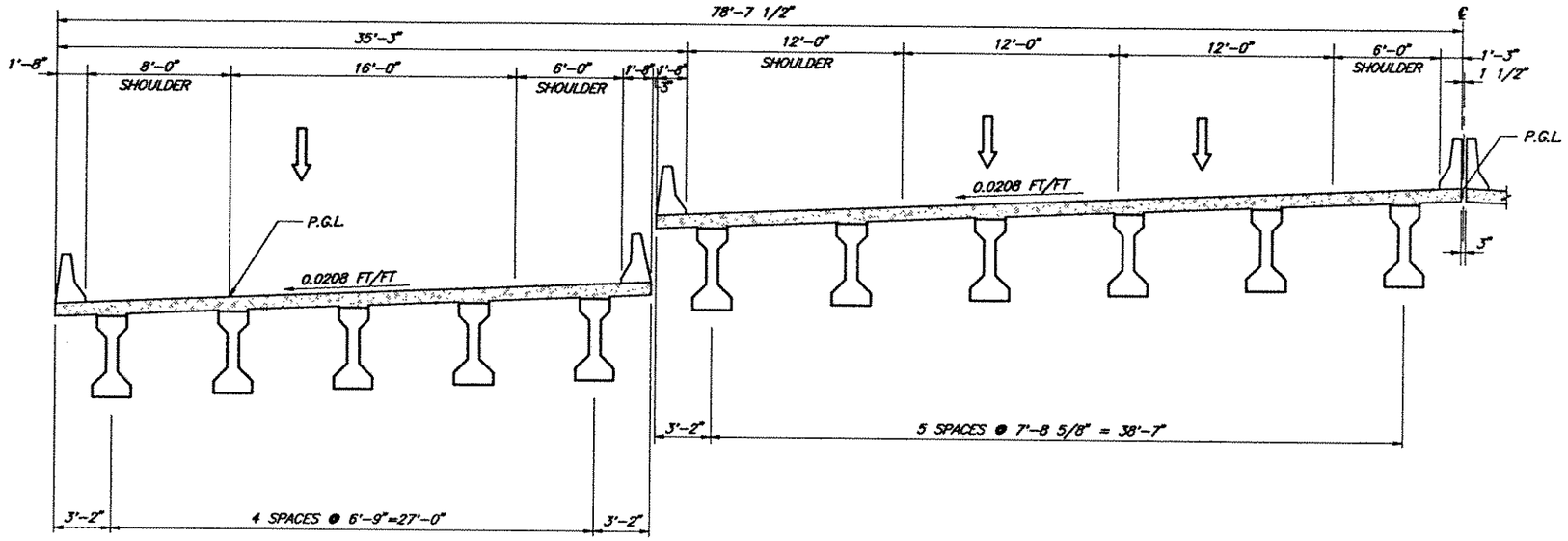


## RAMP S

STATION 502+00 TO STATION 507+50

## MARTIN LUTHER KING FREEWAY SOUTH BOUND LANES

STATION 1038+80 TO STATION 1032+00
SCALE: 1/8"=1'-0"

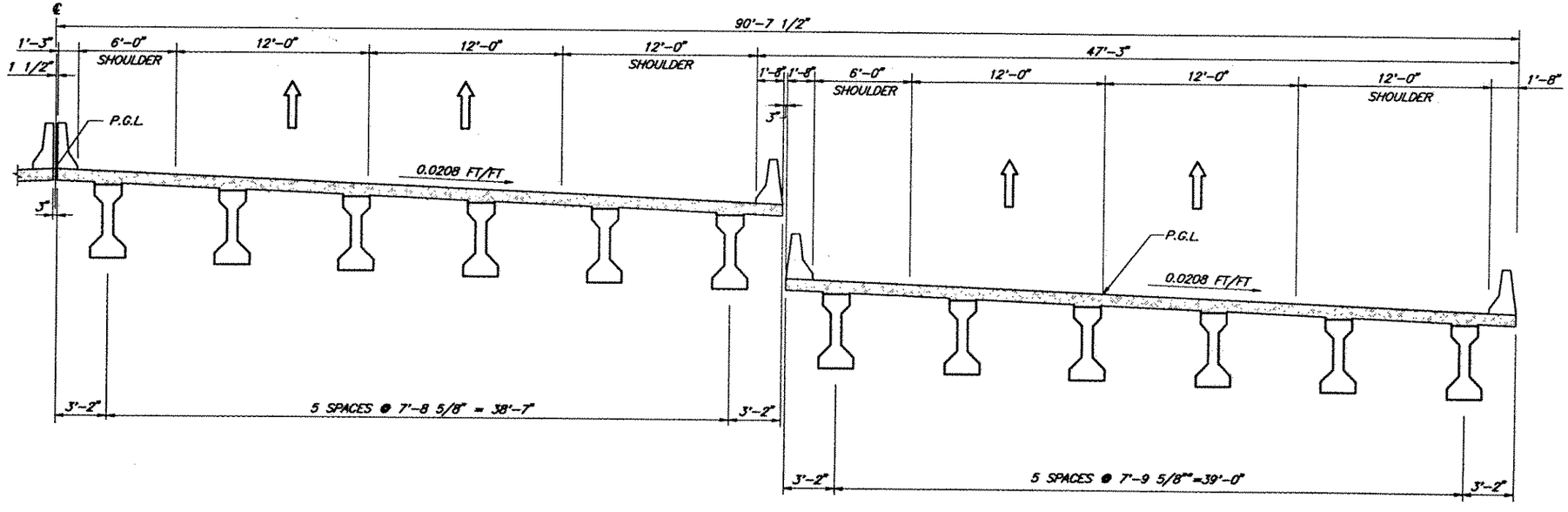


## MARTIN LUTHER KING FREEWAY NORTH BOUND LANES

STATION 1033+80 TO STATION 1038+00
SCALE: 1/8"=1'-0"

## RAMP N

STATION 502+00 TO STATION 507+50

© 1992, Commonwealth of Virginia

| No | Description | Date |
|---|---|---|
| | Revisions | |

COMMONWEALTH OF VIRGINIA
DEPARTMENT OF HIGHWAYS AND TRANSPORTATION
STRUCTURE AND BRIDGE DIVISION

# TYPICAL CROSS SECTIONS ALTERNATE 2

| Designed: — | Drawn: CW | Checked: — | Date | Plan No. | Sheet No. |
|---|---|---|---|---|---|
| | | | JAN. 1993 | | 4 of 18 |

7d13005\REPORT\ALT2.DWG

| FHWA REGION | STATE | FEDERAL AID ROUTE | FEDERAL AID PROJECT | STATE ROUTE | STATE PROJECT | SHEET NO |
|---|---|---|---|---|---|---|
| 3 | VA | | | 58 | 0058-065-104 | |

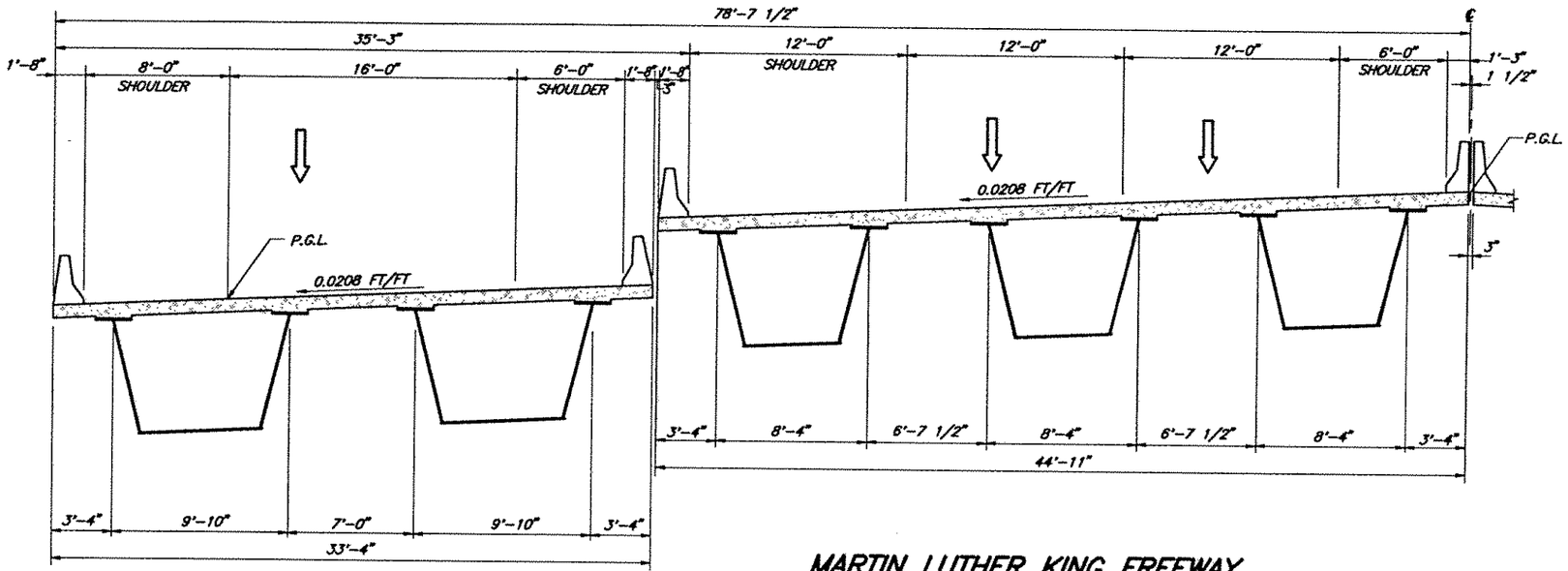


## RAMP S

STATION 502+00 TO STATION 507+50

## MARTIN LUTHER KING FREEWAY SOUTH BOUND LANES

STATION 1038+80 TO STATION 1032+00
SCALE: 1/8"=1'-0"

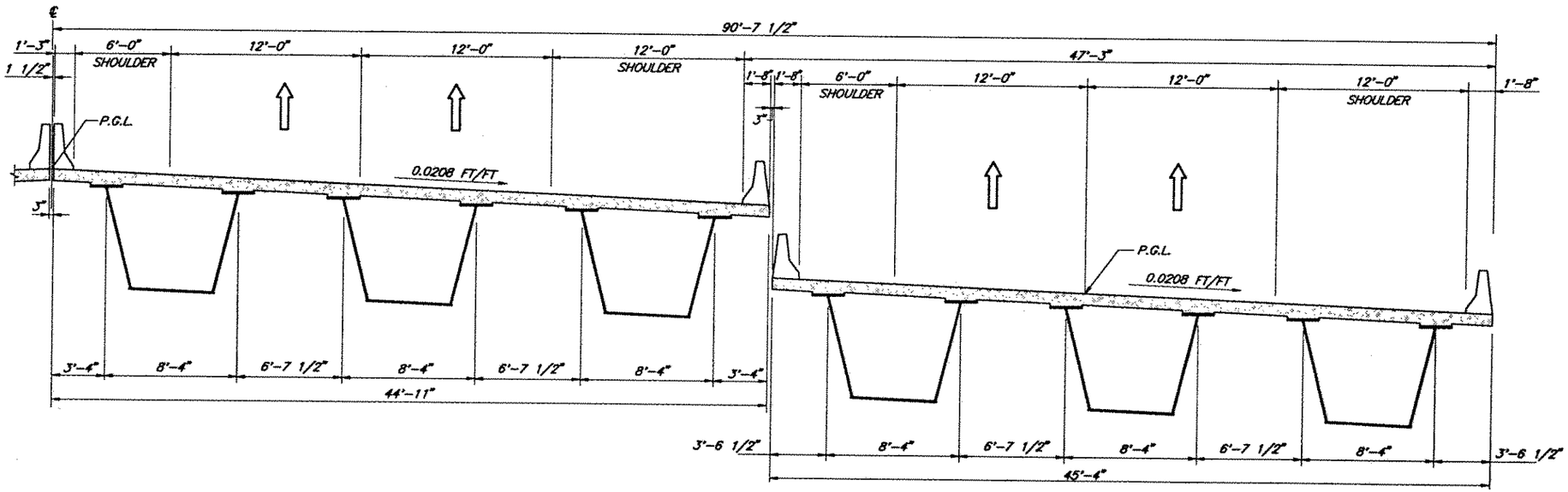


## MARTIN LUTHER KING FREEWAY NORTH BOUND LANES

STATION 1033+80 TO STATION 1038+00
SCALE: 1/8"=1'-0"

## RAMP N

STATION 502+00 TO STATION 507+50

| No | Description | Date |
|---|---|---|
| | Revisions | |

© 1992, Commonwealth of Virginia

COMMONWEALTH OF VIRGINIA
DEPARTMENT OF HIGHWAYS AND TRANSPORTATION
STRUCTURE AND BRIDGE DIVISION

# TYPICAL BOX GIRDER SECTIONS ALTERNATE 3

| Designed: — | Date | Plan No. | Sheet No. |
|---|---|---|---|
| Drawn: CW | | | |
| Checked: — | JAN. 1993 | | 5 of 18 |

T:\81500S\REPORT\ALT3.DWG

| FHWA REGION | STATE | FEDERAL AID ROUTE | FEDERAL AID PROJECT | STATE ROUTE | STATE PROJECT | SHEET NO |
|---|---|---|---|---|---|---|
| 3 | VA | | | 58 | 0058-965-104 | |

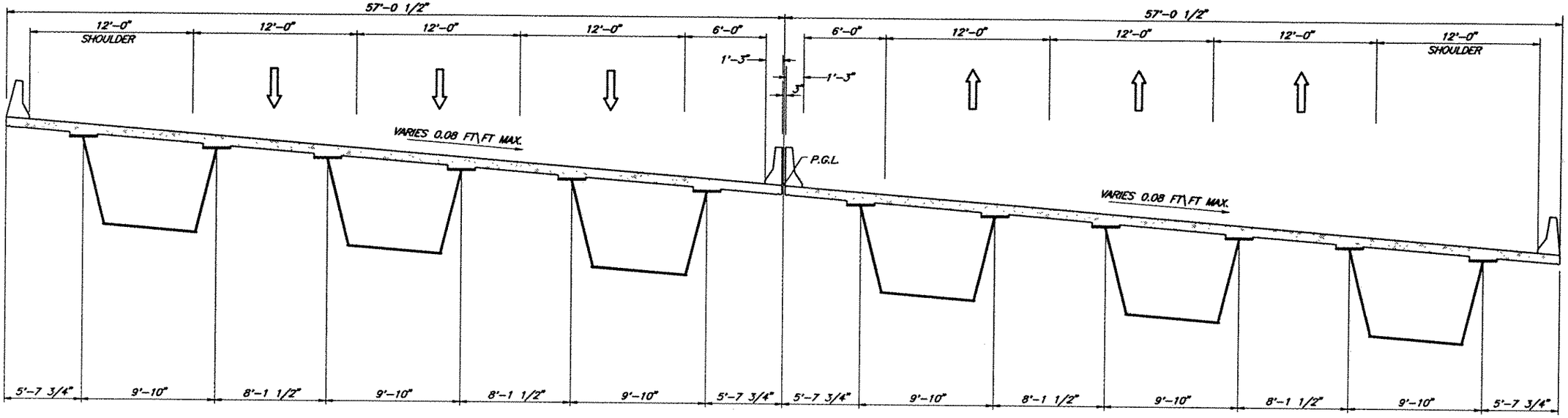


## MARTIN LUTHER KING FREEWAY

STATION 1016+00 TO STATION 1025+25
SCALE: 1/8"=1'-0"

## ALTERNATE 3
## STEEL BOX GIRDER

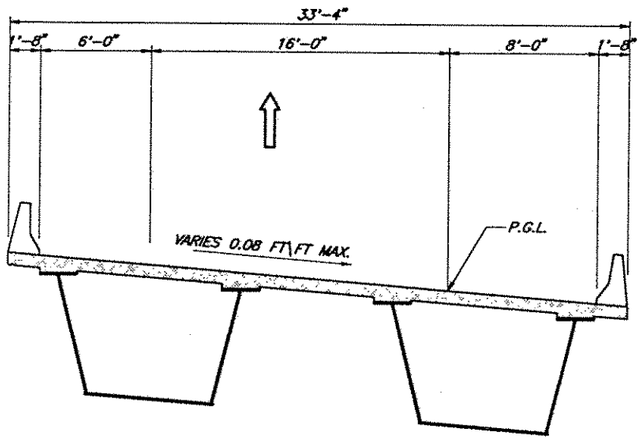


## TYPICAL RAMPS

SCALE: 1/8"=1'-0"

## STEEL BOX GIRDER

| No | Description | Date |
|---|---|---|
| | Revisions | |

© 1992, Commonwealth of Virginia

COMMONWEALTH OF VIRGINIA
DEPARTMENT OF HIGHWAYS AND TRANSPORTATION

STRUCTURE AND BRIDGE DIVISION

**TYPICAL BOX GIRDER SECTION ALTERNATE 3**

| Designed: — Drawn: CW Checked: — | Date | Plan No. | Sheet No. |
|---|---|---|---|
| | Dec 1992 | | 6 of 18 |

T:\813005\REPORT\ALT3.DWG

| FHWA REGION | STATE | FEDERAL AID ROUTE | FEDERAL AID PROJECT | STATE ROUTE | STATE PROJECT | SHEET NO |
|---|---|---|---|---|---|---|
| 3 | VA | | | 58 | 0058-985-104 | |

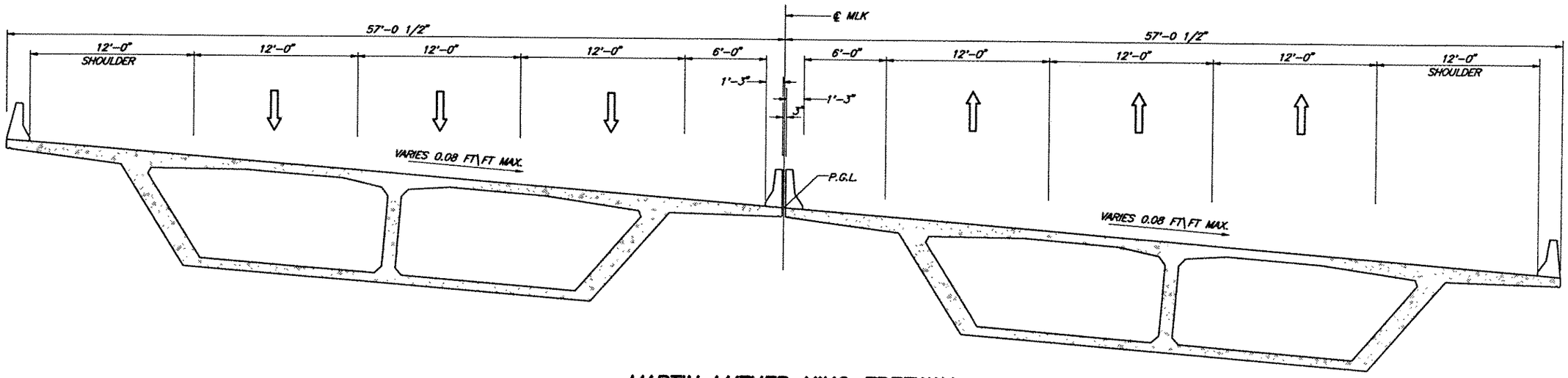


## MARTIN LUTHER KING FREEWAY

STATION 1016+00 TO STATION 1025+25
SCALE: 1/8"=1'-0"

## ALTERNATE 4
## CONCRETE BOX GIRDER

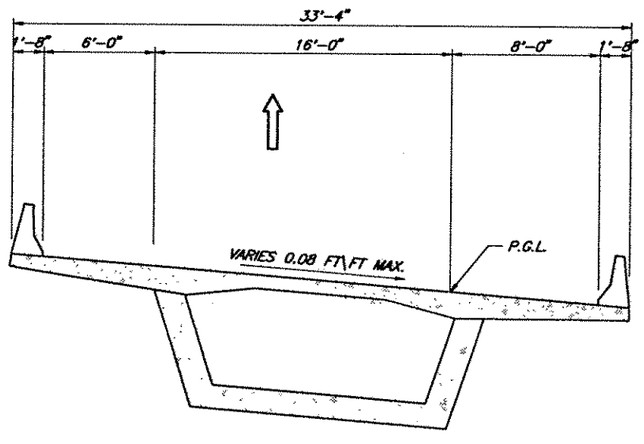


## TYPICAL RAMPS

SCALE: 1/8"=1'-0"

## CONCRETE BOX GIRDER

© 1992, Commonwealth of Virginia

| No | Description | Date |
|---|---|---|
| | Revisions | |

COMMONWEALTH OF VIRGINIA
DEPARTMENT OF HIGHWAYS AND TRANSPORTATION
STRUCTURE AND BRIDGE DIVISION

**TYPICAL BOX GIRDER SECTION ALTERNATE 4**

Designed: ---
Drawn: CW
Checked: ---
Date: JAN. 1993
Plan No.:
Sheet No.: 7 of 18

T:\#15005\REPORT\ALT4.DWG

| FHWA REGION | STATE | FEDERAL AID ROUTE | FEDERAL AID PROJECT | STATE ROUTE | STATE PROJECT | SHEET NO |
|---|---|---|---|---|---|---|
| 3 | VA | | | 58 | 0058-965-104 | |

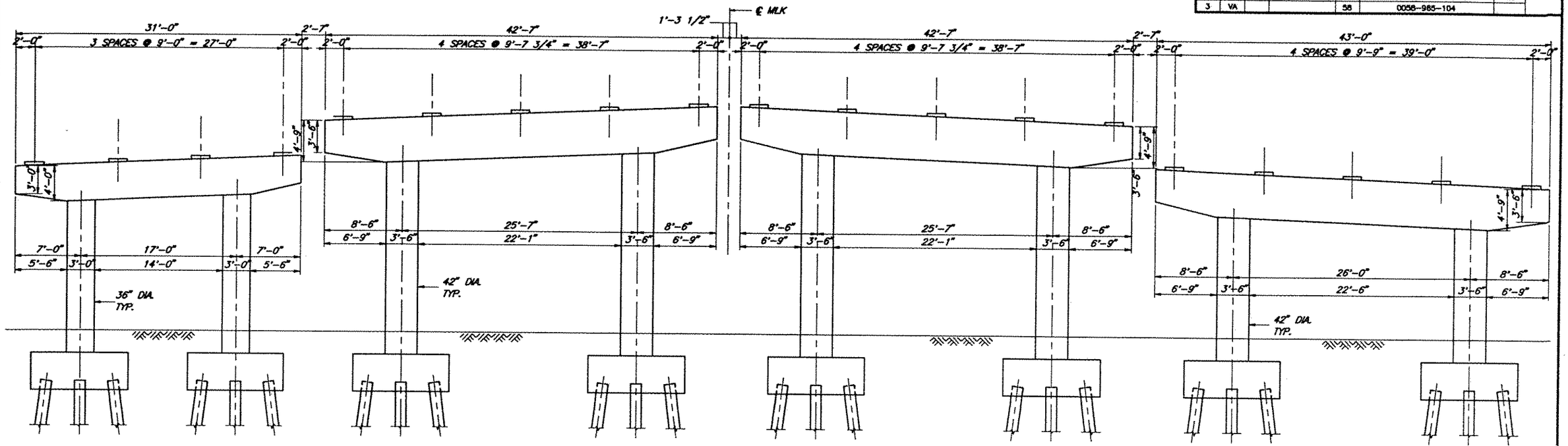


TYPICAL RAMP S PIER
(RAMPS EN, SE, WN, SW & W SIMILAR)

TYPICAL MAIN LINE PIERS
SCALE : 3/32" = 1'-0"

ALTERNATE 1

TYPICAL RAMP N PIER

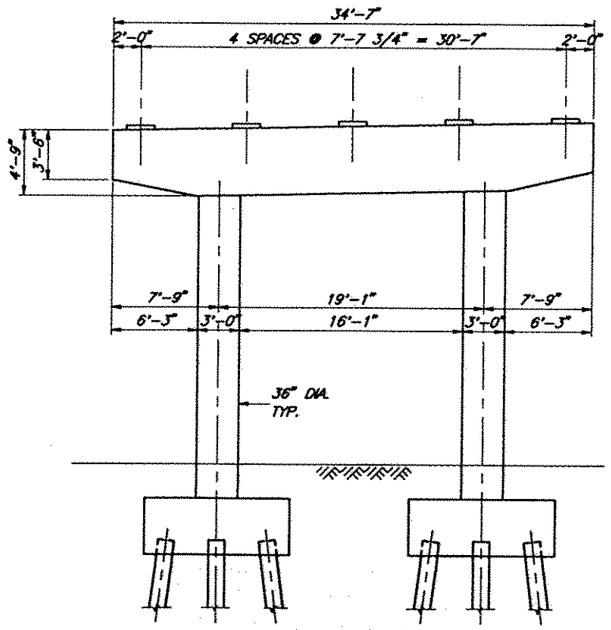


TYPICAL RAMP MAIN LINE PIER
SCALE : 3/32" = 1'-0"

© 1992, Commonwealth of Virginia

| No | Description | Date |
|---|---|---|
| | Revisions | |

COMMONWEALTH OF VIRGINIA
DEPARTMENT OF HIGHWAYS AND TRANSPORTATION

STRUCTURE AND BRIDGE DIVISION

TYPICAL PIER DETAILS
ALTERNATE 1

| Designed: — Drawn: CW Checked: — | Date | Plan No. | Sheet No. |
|---|---|---|---|
| | JAN. 1993 | | 8 of 18 |

T:\81500S\REPORT\ELV1-2.DWG

| FHWA REGION | STATE | FEDERAL AID ROUTE | FEDERAL AID PROJECT | STATE ROUTE | STATE PROJECT | SHEET NO |
|---|---|---|---|---|---|---|
| 3 | VA | | | 58 | 0058-965-104 | |

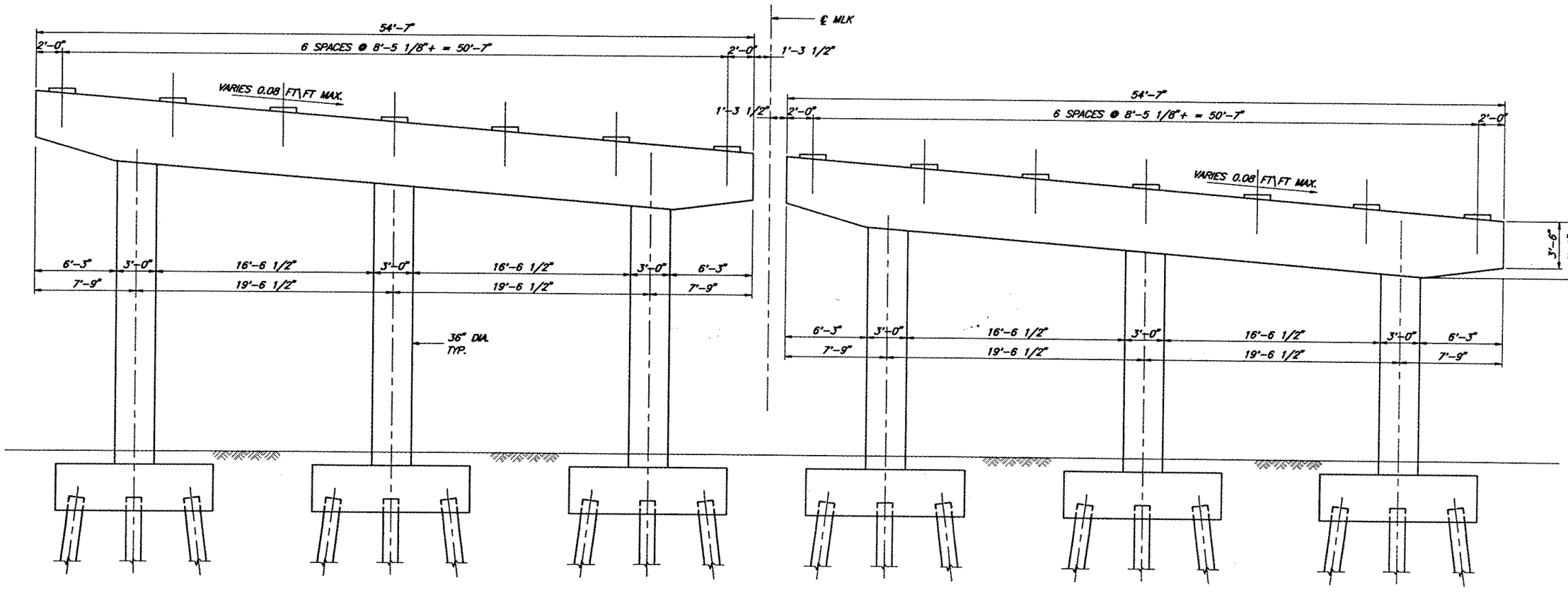


## PIERS – MARTIN LUTHER KING FREEWAY

### ALTERNATE 1

STATION 1016+00 TO STATION 1025+25
SCALE: 1/8"=1'-0"

© 1992, Commonwealth of Virginia

| No | Description | Date |
|---|---|---|
| | Revisions | |

COMMONWEALTH OF VIRGINIA
DEPARTMENT OF HIGHWAYS AND TRANSPORTATION
STRUCTURE AND BRIDGE DIVISION

TYPICAL PIER – M.L.K. FREEWAY
ALTERNATE 1

| Designed: — | Drawn: CW | Checked: — | Date | Plan No. | Sheet No. |
|---|---|---|---|---|---|
| | | | JAN. 1993 | | 9 of 18 |

T:\8150051\REPORT\ELV1-1.DWG

| FHWA REGION | STATE | FEDERAL AID ROUTE | FEDERAL AID PROJECT | STATE ROUTE | STATE PROJECT | SHEET NO |
|---|---|---|---|---|---|---|
| 3 | VA | | | 58 | 0058-965-104 | |

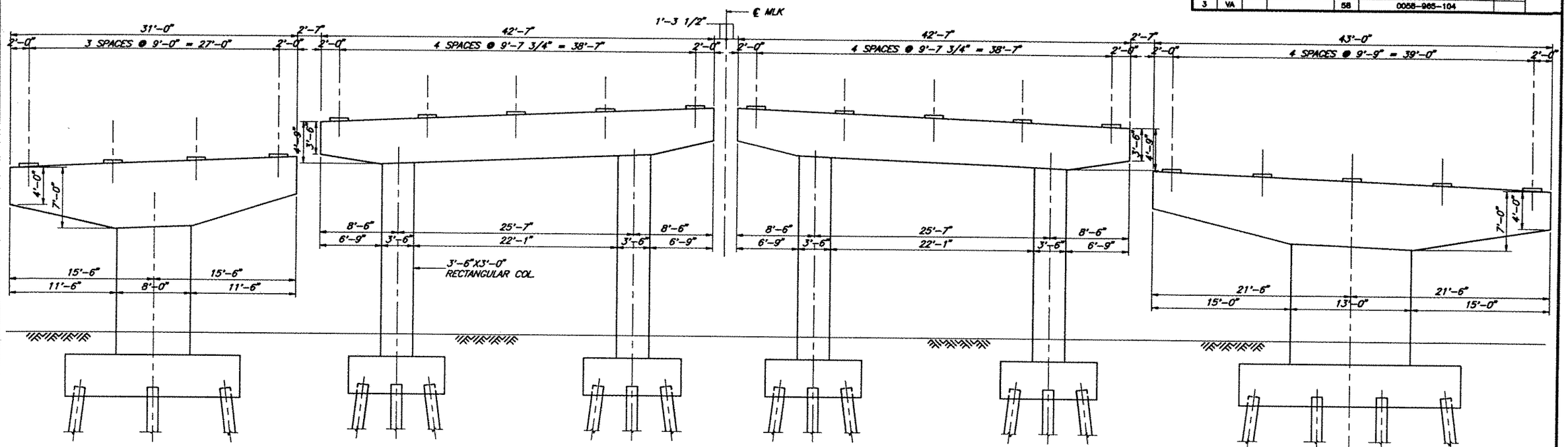


TYPICAL RAMP S PIER

(RAMPS EN, SE, WN, SW & W SIMILAR)

TYPICAL MAIN LINE PIERS

SCALE : 3/32" = 1'-0"

TYPICAL RAMP N PIER

## ALTERNATE 2

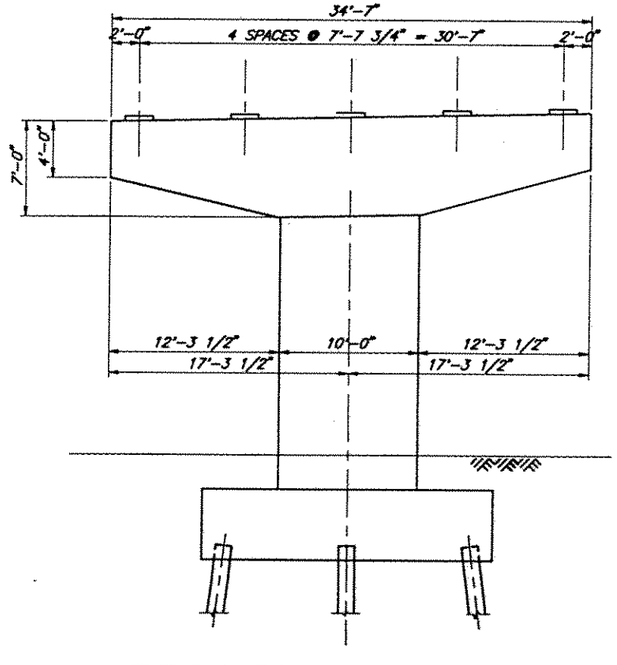


TYPICAL RAMP MAIN LINE PIER

SCALE : 3/32" = 1'-0"

© 1992, Commonwealth of Virginia

| No | Description | Date |
|---|---|---|
| | Revisions | |

COMMONWEALTH OF VIRGINIA
DEPARTMENT OF HIGHWAYS AND TRANSPORTATION

STRUCTURE AND BRIDGE DIVISION

# TYPICAL PIER DETAILS ALTERNATE 2

| Designed: — | Date | Plan No. | Sheet No. |
|---|---|---|---|
| Drawn: CW | JAN. 1993 | | 10 of 18 |
| Checked: — | | | |

T:\81500S\REPORT\ELV2.DWG

| FHWA REGION | STATE | FEDERAL AID ROUTE | FEDERAL AID PROJECT | STATE ROUTE | STATE PROJECT | SHEET NO |
|---|---|---|---|---|---|---|
| 3 | VA | | | 58 | 0058-965-104 | |

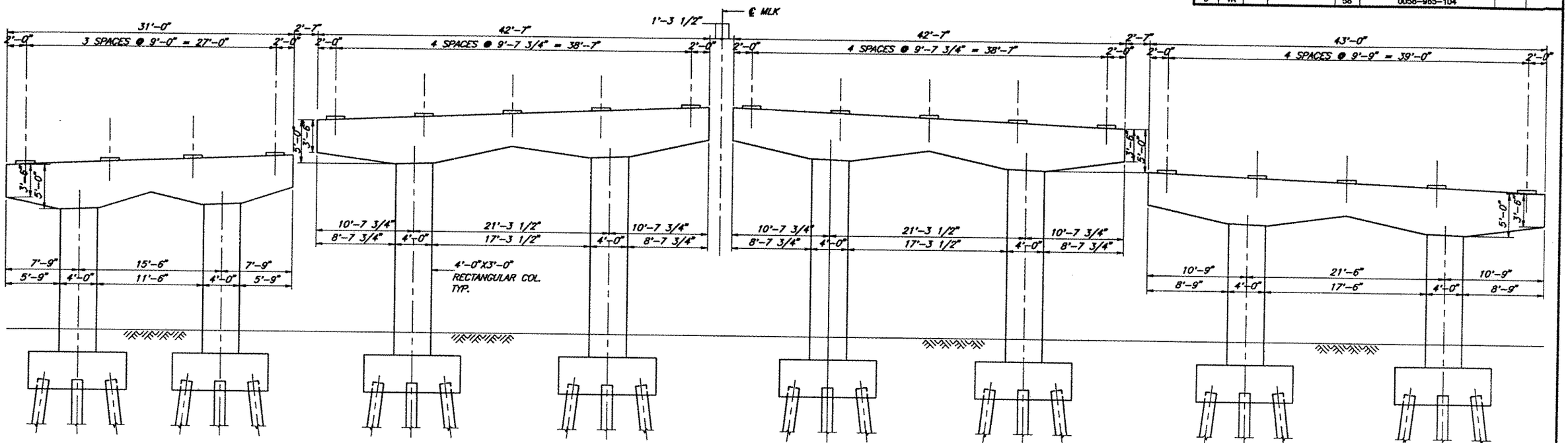


TYPICAL RAMP S PIER

(RAMPS EN, SE, WN, SW & W SIMILAR)

TYPICAL MAIN LINE PIERS

SCALE : 3/32" = 1'-0"

TYPICAL RAMP N PIER

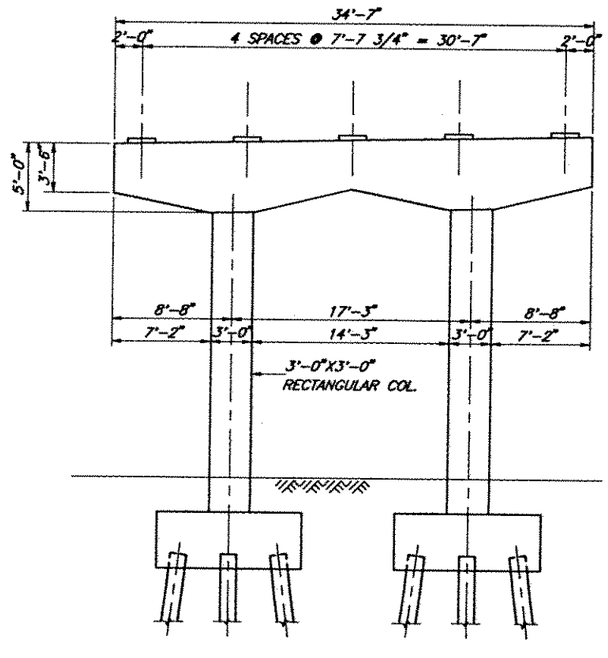


TYPICAL RAMP MAIN LINE PIER

SCALE : 3/32" = 1'-0"

| No | Description | Date |
|---|---|---|
| | Revisions | |

COMMONWEALTH OF VIRGINIA
DEPARTMENT OF HIGHWAYS AND TRANSPORTATION

STRUCTURE AND BRIDGE DIVISION

TYPICAL PIER DETAILS
ALTERNATE 3

| Designed: — Drawn: CW Checked: — | Date | Plan No. | Sheet No. |
|---|---|---|---|
| | JAN. 1993 | | 11 of 18 |

© 1992, Commonwealth of Virginia

T:\81500S\REPORT\ELV3-2.DWG

| FHWA REGION | STATE | FEDERAL AID ROUTE | FEDERAL AID PROJECT | STATE ROUTE | STATE PROJECT | SHEET NO |
|---|---|---|---|---|---|---|
| 3 | VA | | | 58 | 0058-965-104 | |

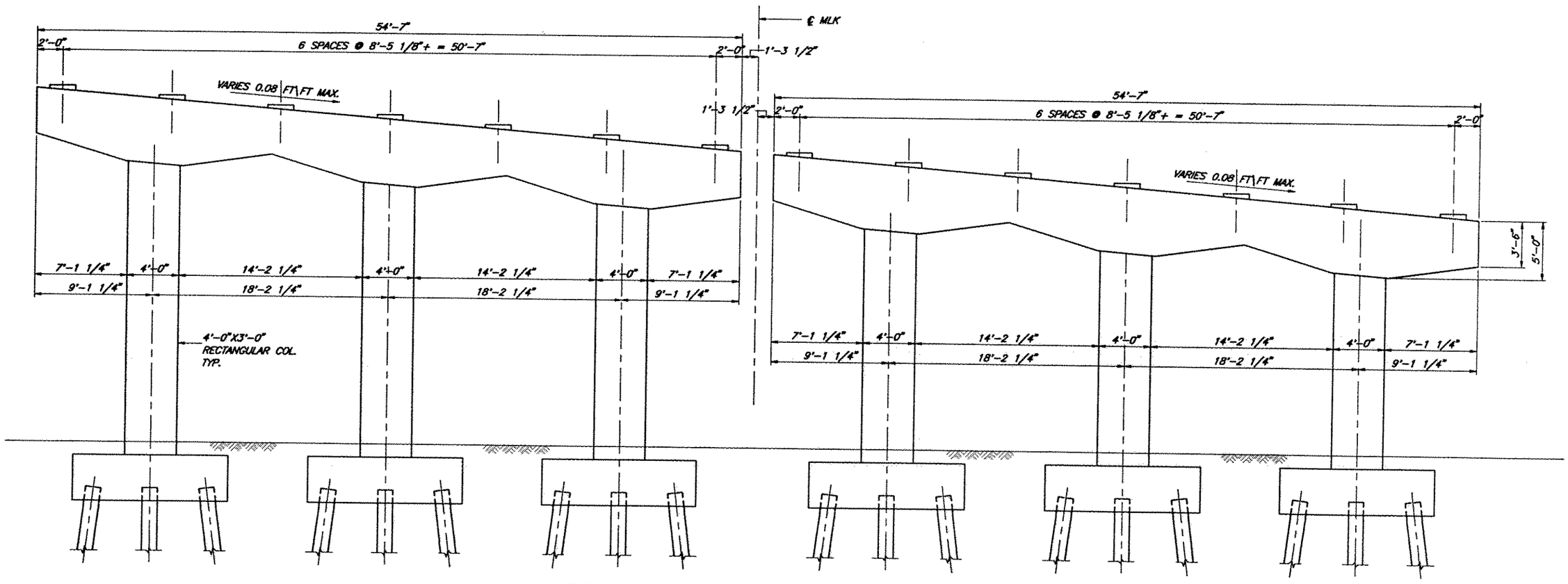


## PIERS – MARTIN LUTHER KING FREEWAY

STATION 1016+00 TO STATION 1025+25
SCALE: 1/8"=1'-0"

## ALTERNATE 3

| No | Description | Date |
|---|---|---|
| | Revisions | |

COMMONWEALTH OF VIRGINIA
DEPARTMENT OF HIGHWAYS AND TRANSPORTATION
STRUCTURE AND BRIDGE DIVISION

**TYPICAL PIER – M.L.K. FREEWAY ALTERNATE 3**

Designed: —
Drawn: CW
Checked: —

Date: JAN. 1993
Plan No.:
Sheet No.: 12 of 18

© 1992, Commonwealth of Virginia

| FHWA REGION | STATE | FEDERAL AID ROUTE | FEDERAL AID PROJECT | STATE ROUTE | STATE PROJECT | SHEET NO |
|---|---|---|---|---|---|---|
| 3 | VA | | | 58 | 0058-965-104 | |

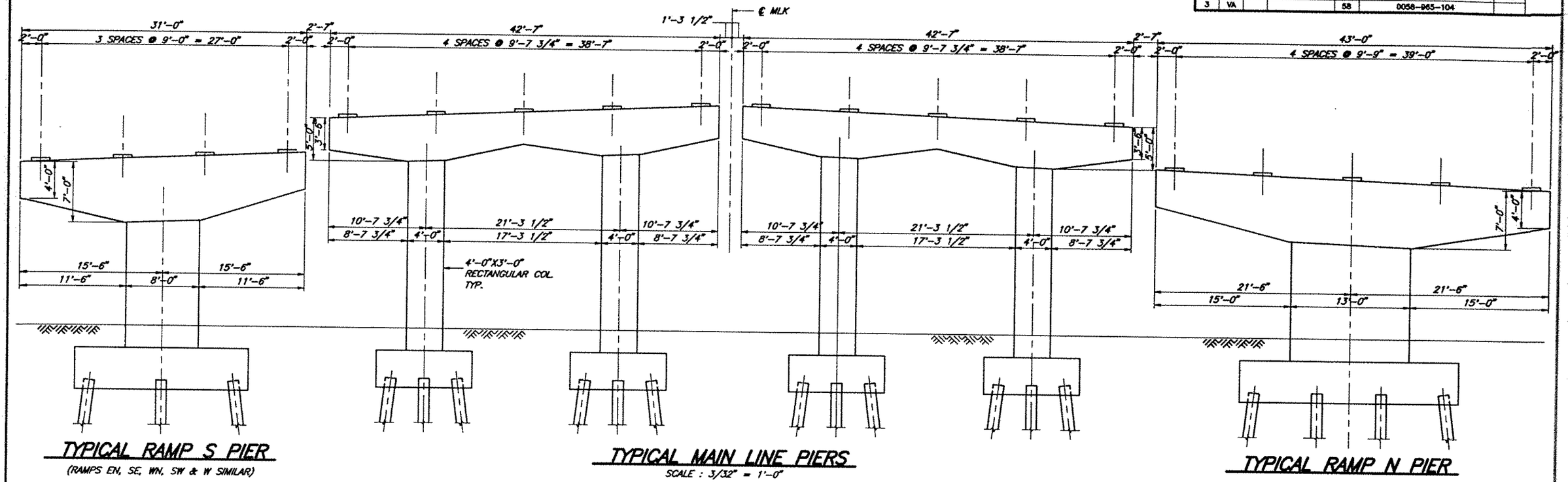


TYPICAL RAMP S PIER
(RAMPS EN, SE, WN, SW & W SIMILAR)

TYPICAL MAIN LINE PIERS
SCALE : 3/32" = 1'-0"

TYPICAL RAMP N PIER

ALTERNATE 4

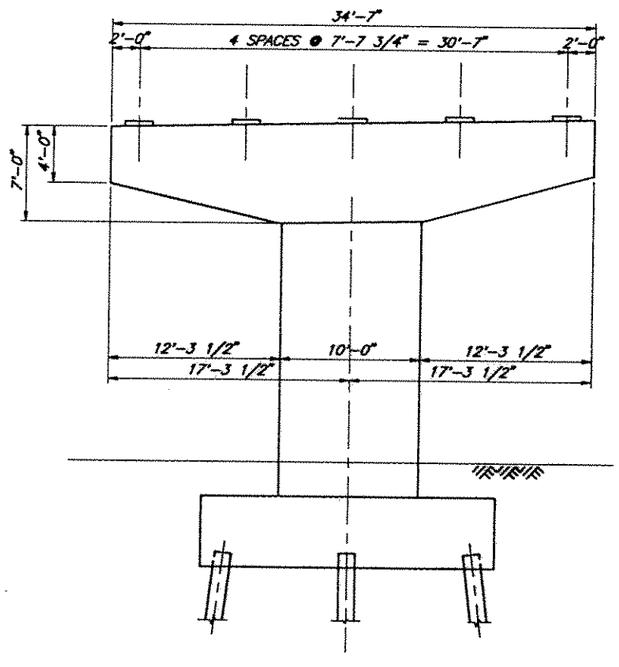


TYPICAL RAMP MAIN LINE PIER
SCALE : 3/32" = 1'-0"

© 1992, Commonwealth of Virginia

| No | Description | Date |
|---|---|---|
| | Revisions | |

COMMONWEALTH OF VIRGINIA
DEPARTMENT OF HIGHWAYS AND TRANSPORTATION
STRUCTURE AND BRIDGE DIVISION

# TYPICAL PIER DETAILS ALTERNATE 4

| Designed: | Drawn: CW | Checked: | Date | Plan No. | Sheet No. |
|---|---|---|---|---|---|
| | | | JAN. 1993 | | 13 of 18 |

D:\15005\REPORT\ELV3A.DWG

| FHWA REGION | STATE | FEDERAL AID ROUTE | FEDERAL AID PROJECT | STATE ROUTE | STATE PROJECT | SHEET NO |
|---|---|---|---|---|---|---|
| 3 | VA | | | 58 | 0058-965-104 | |

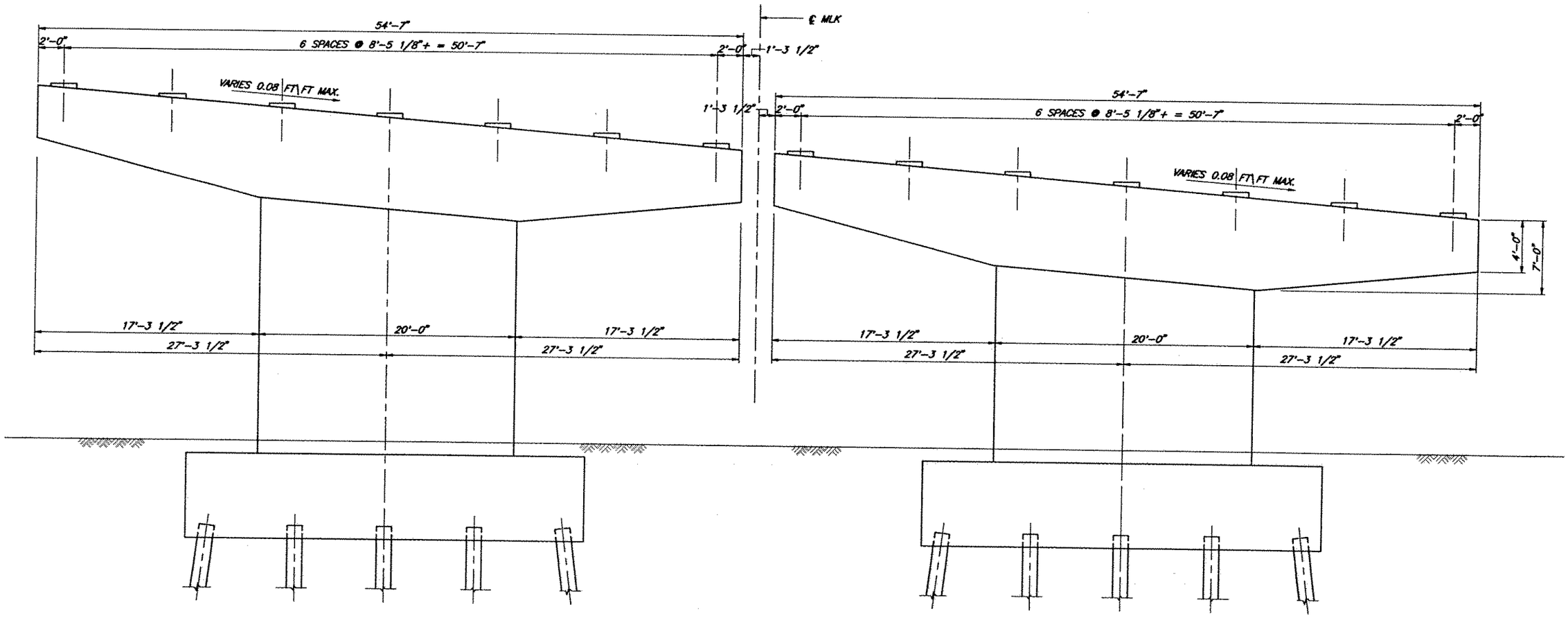


## PIERS – MARTIN LUTHER KING FREEWAY

STATION 1016+00 TO STATION 1025+25
SCALE: 1/8"=1'-0"

## ALTERNATE 5

| No | Description | Date |
|---|---|---|
| | Revisions | |

COMMONWEALTH OF VIRGINIA
DEPARTMENT OF HIGHWAYS AND TRANSPORTATION
STRUCTURE AND BRIDGE DIVISION

**TYPICAL PIER – M.L.K. FREEWAY ALTERNATE 5**

Designed: —
Drawn: CW
Checked: —
Date: JAN. 1993
Plan No.
Sheet No. 15 of 18

© 1992, Commonwealth of Virginia

T:\91500S\REPORT\ELV5-1A.DWG

| FHWA REGION | STATE | FEDERAL AID ROUTE | FEDERAL AID PROJECT | STATE ROUTE | STATE PROJECT | SHEET NO |
|---|---|---|---|---|---|---|
| 3 | VA | | | 58 | 0058-965-104 | |

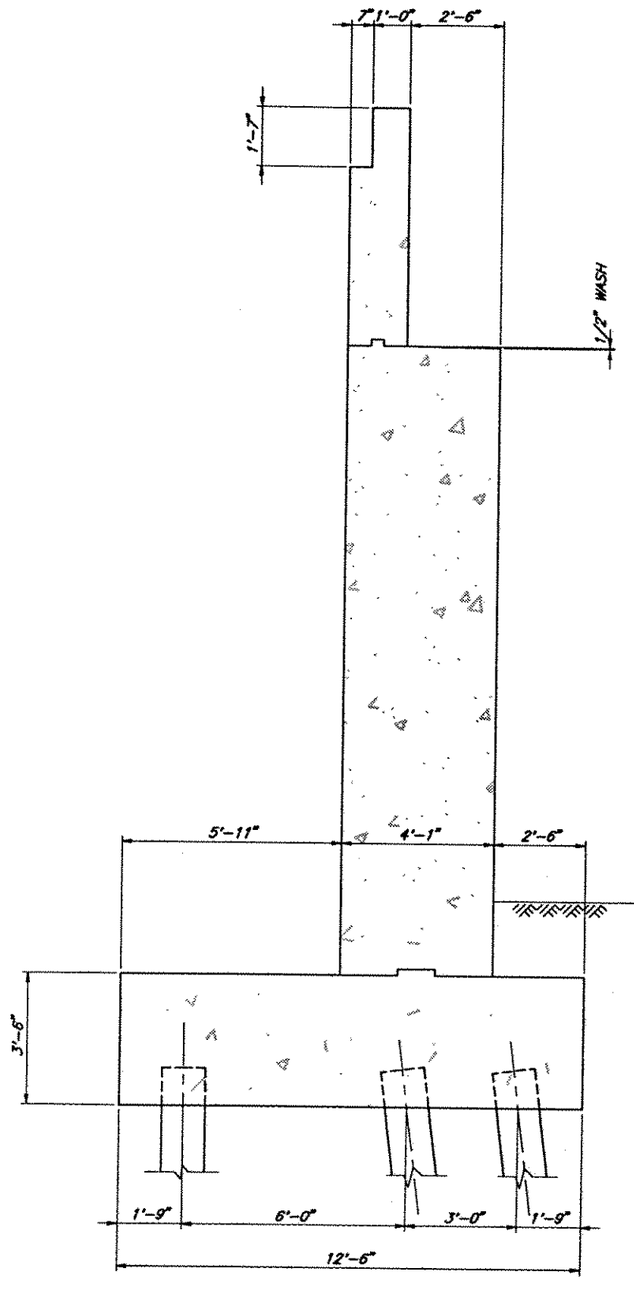


## TYPICAL ABUTMENT AT MAINLINE – STA. 1045+00

SCALE : 1/2" = 1'-0"

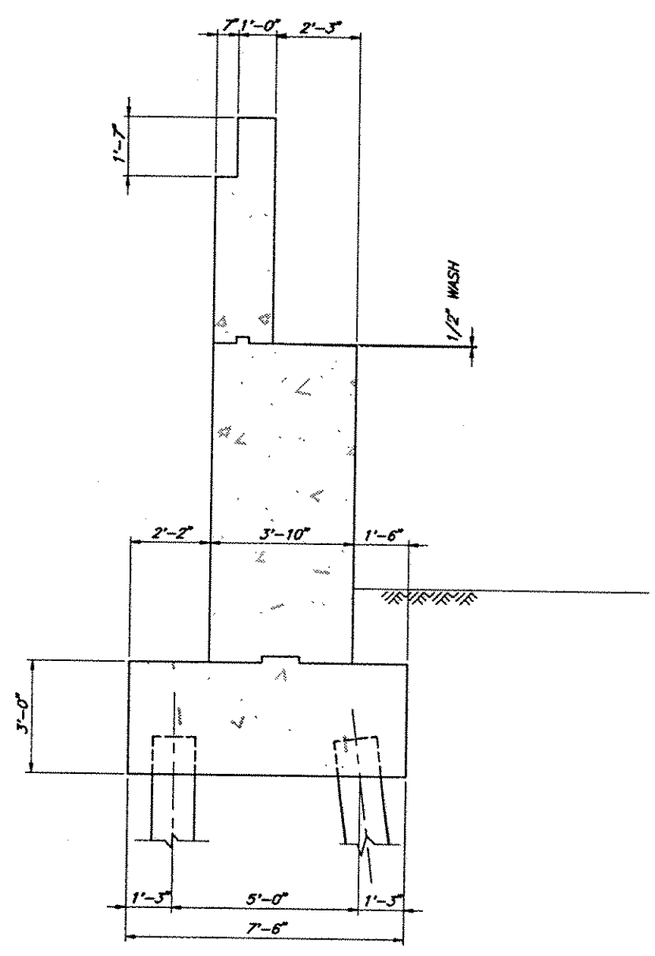


## TYPICAL ABUTMENT AT THE RAMP

SCALE : 1/2" = 1'-0"

© 1992, Commonwealth of Virginia

| No | Description | Date |
|---|---|---|
| | Revisions | |

COMMONWEALTH OF VIRGINIA
DEPARTMENT OF HIGHWAYS AND TRANSPORTATION

STRUCTURE AND BRIDGE DIVISION

# TYP. RAMP & MAINLINE ABUTMENTS

| Designed: --- Drawn: C.W. Checked: --- | Date | Plan No. | Sheet No. |
|---|---|---|---|
| | JAN. 1993 | | 16 of 18 |

I:\#13003\REPORT\ABUT

| FHWA REGION | STATE | FEDERAL AID ROUTE | FEDERAL AID PROJECT | STATE ROUTE | STATE PROJECT | SHEET NO |
|---|---|---|---|---|---|---|
| 3 | VA | | | 58 | 0058-985-104 | |

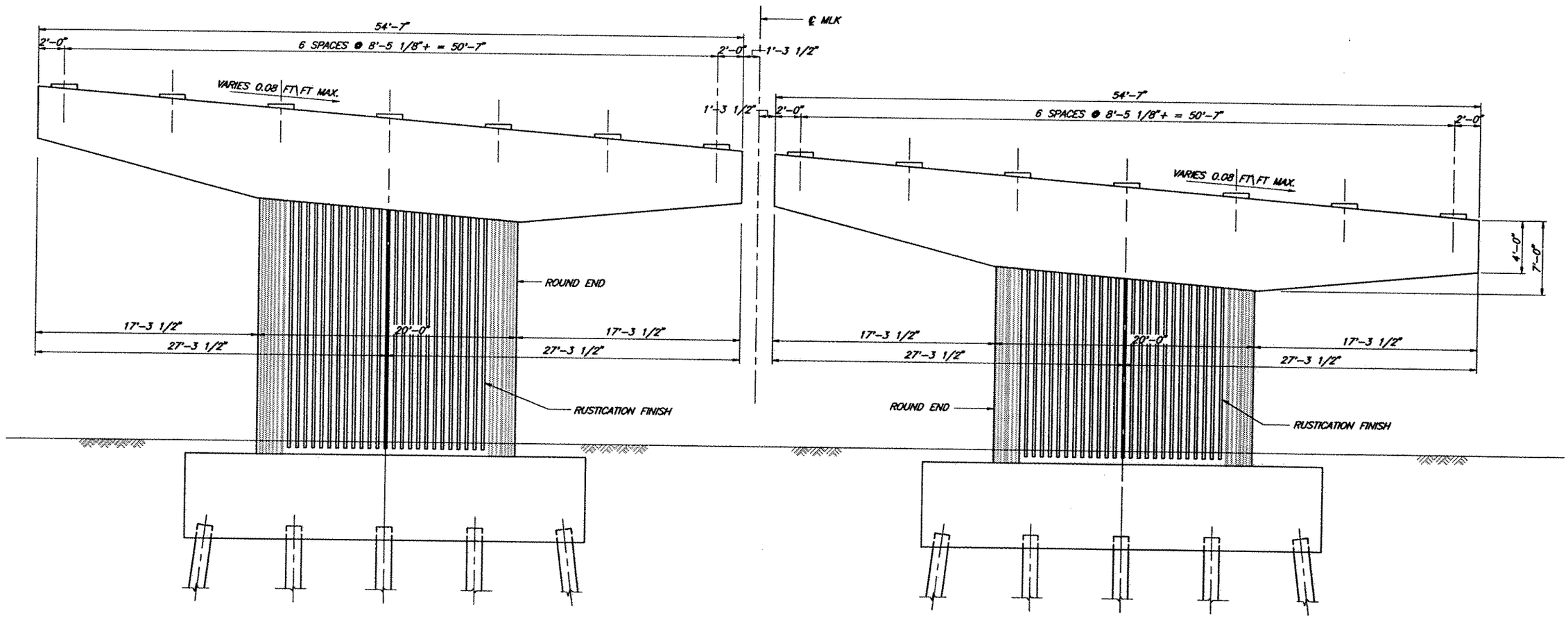


## PIERS – MARTIN LUTHER KING FREEWAY

STATION 1016+00 TO STATION 1025+25
SCALE: 1/8"=1'-0"

## ALTERNATE 5 – WITH RUSTICATION FINISH

| No | Description | Date |
|---|---|---|
| | Revisions | |

© 1992, Commonwealth of Virginia

COMMONWEALTH OF VIRGINIA
DEPARTMENT OF HIGHWAYS AND TRANSPORTATION
STRUCTURE AND BRIDGE DIVISION

# TYPICAL PIER – ALTERNATE 5 RUSTICATION FINISH

| Designed: — | Drawn: CW | Checked: — | Date | Plan No. | Sheet No. |
|---|---|---|---|---|---|
| | | | JAN. 1993 | | 17 of 18 |

T:\9150005\REPORT\ELEV5-18.DWG

| FHWA REGION | STATE | FEDERAL AID ROUTE | FEDERAL AID PROJECT | STATE ROUTE | STATE PROJECT | SHEET NO |
|---|---|---|---|---|---|---|
| 3 | VA | | | 58 | 0058-965-104 | |

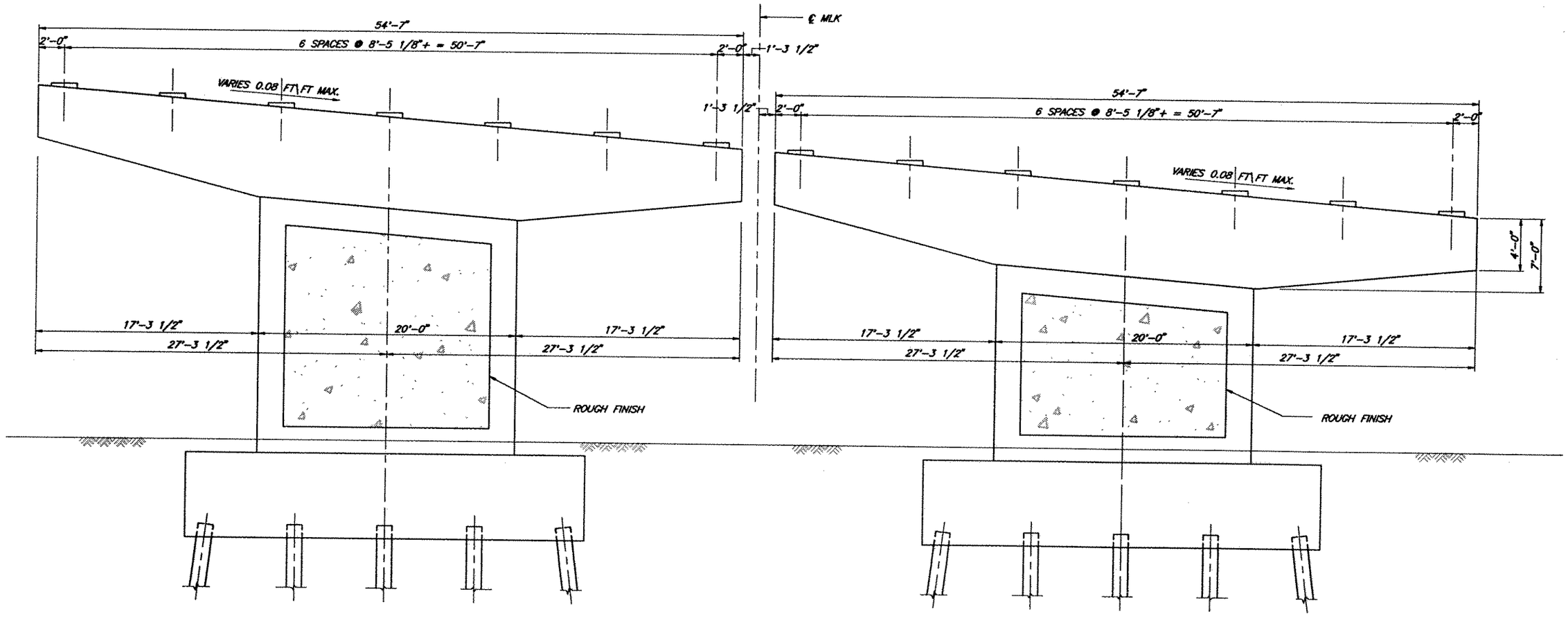


## PIERS – MARTIN LUTHER KING FREEWAY

STATION 1016+00 TO STATION 1025+25
SCALE: 1/8"=1'-0"

## ALTERNATE 5 – WITH ROUGH FINISH

| No | Description | Date |
|---|---|---|
| | Revisions | |

COMMONWEALTH OF VIRGINIA
DEPARTMENT OF HIGHWAYS AND TRANSPORTATION
STRUCTURE AND BRIDGE DIVISION

**TYPICAL PIER – ALTERNATE 5 ROUGH FINISH**

| Designed: | Drawn: CW | Checked: | Date | Plan No. | Sheet No. |
|---|---|---|---|---|---|
| | | | JAN. 1993 | | 18 of 18 |

© 1992, Commonwealth of Virginia