IFB 744-RD

FREDERICKSBURG SAFETY REST AREA AND WELCOME CENTER, I-95 SOUTH

MILEPOST 131, I-95 SOUTH
FREDERICKSBURG, VIRGINIA

PROJECT CODE: 501-06501-007

APPROPRIATION ACT NO: C-24-493.10 (JUNE 2005)

DESIGN TEAM

ARCHITECT

RAWLINGS WILSON & ASSOCIATES
1100 NORTH THOMPSON STREET
RICHMOND, VIRGINIA 23230
(804) 358-9141 FAX (804) 359-5715

CIVIL ENGINEER
MECH, ELEC & PLUMBING ENGINEER
STRUCTURAL ENGINEER

AUSTIN BROCKENBROUGH & ASSOCIATES
4800 WEST HUNDRED ROAD
CHESTER, VIRGINIA 23831
(804) 748-8746 FAX (804) 748-7849

7 INDEX OF DRAWINGS

GENERAL
T1.1 GENERAL INFORMATION

CIVIL
C-1.1 OVERALL SITE PLAN
C-2.1 CIVIL SITE DEMOLITION PLAN
C-3.1 EROSION AND SEDIMENT CONTROL PLAN
C-3.2 EROSION CONTROL DETAILS
C-4.1 LAYOUT PLAN
C-4.2 SIGN PLAN
C-5.1 GRADING AND DRAINAGE PLAN
C-5.2 SPOT SHOTS
C-5.3 EXISTING HYDROLOGY
C-5.4 PROPOSED HYDROLOGY
C-6.1 UTILITIES
C-7.1 CIVIL DETAILS
C-7.2 CIVIL DETAILS
C-7.3 CIVIL DETAILS
C-7.4 CIVIL DETAILS
C-8.1 UTILITY PROFILES

LANDSCAPING
L1.1 LANDSCAPE PLAN
L1.2 LANDSCAPE NOTES AND DETAILS

GEOTECHNICAL
B0.1 BORE LAYOUT
B1.1 BORING LOGS
B1.2 BORING LOGS

ARCHITECTURAL
D1.1 BUILDING DEMOLITION
A1.1 FLOOR PLAN AND FINISH SCHEDULE
A1.2 ENLARGED PLANS
A1.3 FLOOR PATTERNS PLAN AND DETAILS
A1.4 SITE STRUCTURES
A1.5 SITE STRUCTURES
A1.6 PLAZA LAYOUT, SITE STRUCTURES AND DETAILS
A2.1 ELEVATIONS
A3.1 SECTIONS
A3.2 WALL SECTIONS
A4.1 RESTROOM ELEVATIONS
A4.2 INTERIOR ELEVATIONS
A4.3 INTERIOR ELEVATIONS AND DETAILS
A5.1 ROOF PLAN AND DETAILS
A6.1 DOOR AND LOUVER TYPES AND DETAILS
A6.2 WINDOW AND PRECAST TYPES AND DETAILS
A7.1 REFLECTED CEILING PLAN AND DETAILS

FIRE PROTECTION INFO.
FP1.1 FIRE PROTECTION INFORMATION

FIRE PROTECTION
F1.1 FIRE ALARM PLAN
F2.1 SPRINKLER PLAN
F3.1 FIRE ALARM RISER, SEQ. OF OPERATION
F4.1 SPRINKLER SECTION, AND DETAILS

STRUCTURAL
S0.1 STRUCTURAL NOTES, ABBREVIATIONS AND LEGEND
S1.1 FOUNDATION PLAN AND DETAILS
S2.1 ROOF PLAN AND DETAILS
S2.2 COLD FORMED METAL ROOF PLAN
S3.1 STRUCTURAL DETAILS
S3.2 STRUCTURAL DETAILS
S3.3 STRUCTURAL DETAILS

MECHANCIAL
M1.1 MECHANICAL PLAN, ABBREVIATIONS AND LEGEND
M2.1 MECHANICAL ROOF PLAN
M3.1 MECHANICAL CONTROLS

PLUMBING
P1.1 PLUMBING PLAN, ABBREVIATIONS AND LEGEND
P2.1 PLUMBING ISOMETRICS

ELECTRICAL
E0.1 LEGEND ABBREVIATIONS AND NOTES
E1.1 ELECTRICAL SITE PLAN
E2.1 POWER PLAN AND PARTIAL ROOF PLAN
E3.1 LIGHTING PLAN AND SCHEDULE
E4.1 CCTV PLAN AND DETAILS
E5.1 PANELBOARD SCHEDULES
E5.2 PANELBOARD SCHEDULES

6 SYMBOLS

SCALE : N/A

- +56.20 — EXIST. POINT ELEVATION
- +56.20 — NEW POINT ELEVATION
- LEVEL LINE
- 2 — REVISION
- 105 — WINDOW NUMBER
- A — 3 — COLUMN REFERENCE GRID
- 130 — DOOR NUMBER
- 203 — ROOM NUMBER
- 2 — PARTITION / WALL TYPE
- 3 — NUMBERED NOTE - NEW CONST
- CENTERLINE, FLOOR LINE OR PROJECTED LINE
- PROPERTY LINE OR BOUNDARY LINE
- BREAK LINE
- REFLECTED OR CONCEALED LINE
- PLAN NORTH / TRUE NORTH — PROJECT NORTH
- 5 / A32 A32 — SECTION NUMBER / SECTION; SHEET NUMBER WHERE SHOWN; SHEET NUMBER WHERE TAKEN
- N / 8 / W / A32 A32 — ELEVATION IDENTIFIER; ELEVATION NUMBER / ROOM ELEVATION; SHEET NUMBER WHERE SHOWN; SHEET NUMBER WHERE TAKEN
- 5 / A32 A32 — ELEVATION NUMBER / ELEVATION; SHEET NUMBER WHERE SHOWN; SHEET NUMBER WHERE TAKEN
- C / A32 A32 — DETAIL NUMBER / DETAIL; SHEET NUMBER WHERE SHOWN; SHEET NUMBER WHERE TAKEN
- A7/A4.1 — DETAIL NUMBER; SHEET NUMBER WHERE SHOWN

5 ABBREVIATIONS

SCALE : N/A

A	
AB	ANCHOR BOLT
ACU	AIR CONDITIONING UNIT
AD	AREA DRAIN
ADJ	ADJACENT
ADJT	ADJUSTABLE
AHU	AIR HANDLING UNIT
AFF	ABOVE FINISHED FLOOR
ALT	ALTERNATE
ALUM	ALUMINUM
ANCH	ANCHOR
ANOD	ANODIZED
AP	ACCESS PANEL
APC	ACOUSTICAL PANEL CEILING
APF	ACOUSTICAL PLASTER FINISH
ARCH	ARCHITECT (URAL)
B	
BD	BOARD
BIT	BITUMINOUS
BJ	BAR JOIST
BLDG	BUILDING
BLKG	BLOCKING
BM	BENCH MARK
BOT	BOTTOM
BR	BEDROOM
BRG	BEARING
BRK	BRICK
BS	BOTH SIDES, BACKSPLASH
BSMT	BASEMENT
BTWN	BETWEEN
BUR	BUILT UP ROOFING
BW	BOTH WAYS
C	
C	COURSE (S)
CAB	CABINET
CB	CATCH BASIN, CORNER BEAD, CHALK BOARD
CF	CUBIC FOOT (FEET)
CPT	CARPET
CI	CAST IRON
CIPC	CAST-IN-PLACE CONCRETE
CNJ	CONSTRUCTION JOINT
CJ	CONTROL JOINT
CKBD	CHALKBOARD
CKG	CAULKING
CLG	CEILING
CLOS	CLOSET
CLR	CLEAR
CMU	CONCRETE MASONRY UNIT (S)
COL	COLUMN
CONC	CONCRETE
CONN	CONNECTION
CONST	CONSTRUCTION
CONT	CONTINUOUS, CONTINUE
CONV	CONVECTOR
COORD	COORDINATE
CORR	CORRIDOR, CORRUGATED
CSNK	COUNTERSINK
CST	CAST STONE
CT	CERAMIC TILE
CW	COLD WATER
CY	CUBIC YARD (S)
D	
D	DEEP, DEPTH
DA	DOUBLE ACTING
DEM	DEMOLISH, DEMOLITION
DET	DETAIL
DF	DRAINAGE FILL
DF	DRINKING FOUNTAIN
DH	DOUBLE HUNG
DI	DROP INLET
DIAG	DIAGONAL
DIA	DIAMETER
DIM	DIMENSION
DISP	DISPENSER
DIV	DIVISION
DMPRG	DAMPPROOFING
DN	DOWN
DPR	DAMPER
DR	DOOR, DISPLAY RAIL
DS	DOWNSPOUT
DT	DRAIN TILE
DVTL	DOVETAIL
DWG	DRAWING
DWR	DRAWER
E	
(E)	EXISTING
E	EAST
EB	EXPANSION BOLT
EC	EMPTY CONDUIT
EF	EACH FACE, EXHAUST FAN
EIFS	EXTERIOR INSULATION FINISH SYSTEM
EJ	EXPANSION JOINT
EL	ELEVATION
ELEC	ELECTRIC(AL)
ELEV	ELEVATOR, ELEVATION
ENCL	ENCLOSURE
ENTR	ENTRANCE
EPC	EPOXY FLOOR COATING
EQUIP	EQUIPMENT, EQUIPPED
EW	EACH WAY
EWC	ELECTRIC WATER COOLER
EXH	EXHAUST
ETR	EXISTING TO REMAIN
EXT	EXTERIOR
F	
FA	FIRE ALARM, FRESH AIR
FBRK	FACE BRICK
FC	FURRING CHANNEL
FD	FLOOR DRAIN, FIRE DAMPER
FDN	FOUNDATION
FE	FIRE EXTINGUISHER
FEC	FIRE EXTINGUISHER CABINET
FFL	FINISH FLOOR LINE
FH	FIRE HYDRANT
FHC	FIRE HOSE CABINET
FG	FLOAT GLASS
FIN	FINISH (ED)
FLR	FLOOR
FLSHG	FLASHING
FND	FEMININE NAPKIN DISPENSER
FNR	FEMININE NAPKIN RECEPTACLE
FOM	FACE OF MASONRY
FRPF	FIREPROOF
FRPFG	FIREPROOFING
FT	FOOT, FEET
FTG	FOOTING
FUR	FURRED, FURRING
FUT	FUTURE
G	
GA	GAGE, GAUGE
GALV	GALVANIZED
GB	GRAB BAR
GL	GLASS, GLAZING
GPDW	GYPSUM DRYWALL
GFCM	GROUND FACE CONCRETE MASONRY UNIT
GYP	GYPSUM
H	
HB	HOSE BIBB
HC	HOLLOW CORE
HCMU	HOLLOW CONCRETE MASONRY UNIT
HDBD	HARDBOARD
HDPD	HIGH DENSITY PARTICLE BOARD
HDR	HEADER
HDWD	HARDWOOD
HDWR	HARDWARE
HM	HOLLOW METAL
HORIZ	HORIZONTAL
HP	HIGH POINT, HORSEPOWER
HT	HEIGHT
HVAC	HEATING/VENTILATING/ AIR CONDITIONING
I	
ID	INSIDE DIAMETER
IG	INSULATED GLAZING
IN	INCH, INCHES
INCL	INCLUDE(D), (ING), INCLUSIVE
INSUL	INSULATE(D), (TION), (ING)
INT	INTERIOR
INV	INVERT
J	
J	JOIST
JB	JUNCTION BOX
JC	JANITOR'S CLOSET
JF	JOINT FILLER
JT	JOINT
K	
KIT	KITCHEN
L	
L	LENGTH
LAM	LAMINATE(D)
LAV	LAVATORY
LIN	LINOLEUM
LPT	LOW POINT
LT	LIGHT
LTL	LINTEL
LTWT	LIGHTWEIGHT
LVR	LOUVER
M	
M	MINUTE, METER
MANUF	MANUFACTURER, MANUFACTURER'S
MAS	MASONRY
MATL	MATERIAL
MAX	MAXIMUM
MB	MARKER BOARD
MECH	MECHANICAL
MEMB	MEMBRANE
MEP	MECHANICAL, ELECTRICAL, PLUMBING (DRAWINGS)
MFGR	MANUFACTURER
MIN	MINIMUM
MISC	MISCELLANEOUS
ML	MATCH LINE
MLDG	MOLDING
MLWK	MILLWORK
MM	MILLIMETER
MO	MASONRY OPENING
MR	MOISTURE RESISTANT
MTD	MOUNTED
MTL	METAL
MULL	MULLION
MUP	METAL WALL PANELS
N	
N	NORTH
N/A	NOT APPLICABLE
NIC	NOT IN CONTRACT
NOM	NOMINAL
NRC	NOISE REDUCTION COEFFICIENT
NTS	NOT TO SCALE
O	
OA	OVERALL
OBS	OBSCURE
OC	ON CENTER(S)
OD	OUTSIDE DIAMETER
OH	OPPOSITE HAND, OVERHEAD
OPNG	OPENING
OPP	OPPOSITE
OSB	ORIENTED STRAND BOARD
OVHD	OVERHEAD
P	
PBD	PARTICLEBOARD
PCC	PRECAST CONCRETE
PERF	PERFORATE(D)
PL	PLATE, PROPERTY LINE
PLAM	PLASTIC LAMINATE
PLAS	PLASTER
PLYWD	PLYWOOD
PRPT	PARAPET
PNL	PANEL
PNTD	PAINT(ED)
PR	PAIR
PTN	PARTITION
PT	PORCELAN TILE
Q	
QT	QUARRY TILE
QTY	QUANTITY
R	
R	RISER
RAD	RADIUS
RD	ROOF DRAIN
REF	REFERENCE
REINF	REINFORCE(D), (ING)
REQD	REQUIRED
RET	RETURN, RETAINING
REV	REVISION(S), REVISED
RH	RIGHT HAND
RM	ROOM
RO	ROUGH OPENING
S	
S	SOUTH
SAN	SANITARY
SC	SOLID CORE
SCHED	SCHEDULE
SD	STORM DRAIN
SGT	STRUCTURAL GLAZED TILE
SHT	SHEET
SHTG	SHEATHING
SIM	SIMILAR
SJ	STEEL JOIST
SLNT	SEALANT
SPEC	SPECIFICATION(S)
SPM	SINGLE-PLY MEMBRANE
SPR	SPRINKLER
SQ	SQUARE
SS	STAINLESS STEEL
STD	STANDARD
STL	STEEL
STOR	STORAGE
STRUCT	STRUCTURAL
SUSP	SUSPENDED, SUSPENSION
SYM	SYMMETRICAL
SYS	SYSTEM
T	
T	TREAD
TB	TOWEL BAR, TACK BOARD
TC	TERRA COTTA
TCP	TERRA COTTA PIPE
TEL	TELEPHONE
TERR	TERRAZZO
T & G	TONGUE AND GROOVE
THK	THICK(NESS)
THOLD	THRESHOLD
TJ	TAPERED INSULATION
TLT	TOILET
TMPRD	TEMPERED
TOC	TOP OF CURB
TOM	TOP OF MASONRY
TOS	TOP OF SLAB, TOP OF STRUCTURE
TOW	TOP OF WALL
TPD	TOILET PAPER DISPENSER
TPH	TOILET PAPER HOLDER
TPTN	TOILET PARTITION
TRTD	TREATED
TS	TACK STRIP, TUBE SECTION
TV	TELEVISION
TYP	TYPICAL
U	
UC	UNDERCUT
UNFIN	UNFINISHED
UON	UNLESS OTHERWISE NOTED
UOS	UNDERSIDE OF SLAB
UOSD	UNDERSIDE OF STEEL DECK
V	
VCT	VINYL COMPOSITION TILE
VB	VINYL BASE
VERT	VERTICAL
VF	VERIFY IN FIELD
VNR	VENEER
VR	VAPOR RETARDER
VT	VINYL TILE
VWC	VINYL WALL COVERING
W	
W	WEST, WIDE, WIDTH
W/	WITH
WB	WOOD BASE
WC	WATER CLOSET, WALL COVERING
WD	WOOD
WDW	WINDOW
WGL	WIRED GLASS
WHSTRIP	WEATHERSTRIP(PING)
WM	WATER MAN, WIRE MESH
W/O	WITHOUT
WPRG	WATERPROOF(ING)
WR	WATER RESISTANT
WWF	WELDED WIRE FABRIC
WWM	WELDED WIRE MESH
X	
XFMR	TRANSFORMER

4 MATERIAL DESIGNATIONS

SCALE : N/A

- EARTH
- CONCRETE
- BRICK
- CONCRETE MASONRY UNITS
- METAL (LARGE SCALE)
- METAL (SMALL SCALE)
- PLYWOOD (LARGE SCALE)
- PLYWOOD (SMALL SCALE)
- FINISH WOOD
- WOOD FRAMING / BLOCKING
- POROUS FILL
- INSULATION - BLANKET OR LOOSE FILL
- INSULATION - RIGID BOARD
- PLASTER, DRYWALL, OR LIMESTONE
- CARPET
- ACOUSTIC TILE OR ACOUSTIC PANELS

3 LOCATION MAP

SCALE : N/A

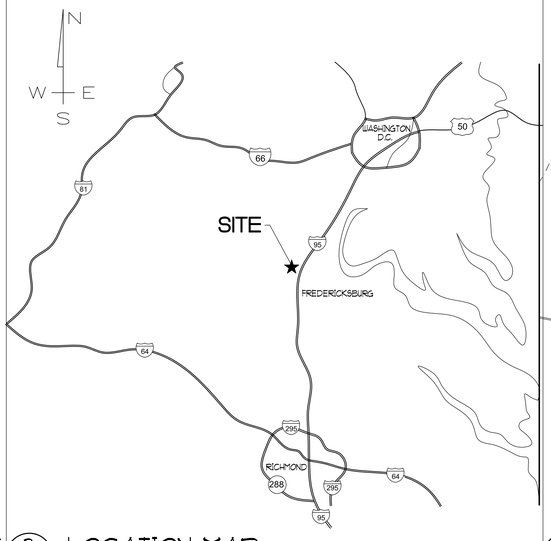

2 VICINITY MAP

SCALE : N/A

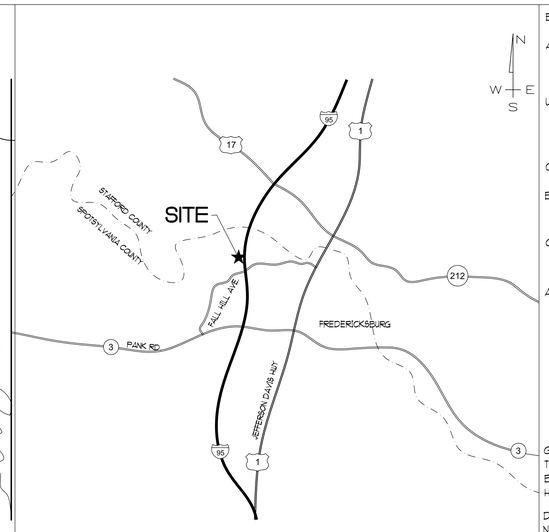

1 BLDG CODE DATA

SCALE : N/A

BUILDING PURPOSE:
SAFETY REST AREA AND WELCOME CENTER

APPLICABLE CODES:
VIRGINIA UNIFORM STATEWIDE BUILDING CODE, 2003
VIRGINIA CONSTRUCTION AND PROFESSIONAL SERVICES MANUAL, 2004
AADAG JULY 23, 2004

USE GROUP (VUSBC):
MIXED NON-SEPARATED USES:
A-3(ASSEMBLY)
B (BUSINESS)
S-1 (STORAGE)

CONSTRUCTION TYPE (VUSBC):
IIB - NONCOMBUSTIBLE, UNPROTECTED

BUILDING WILL BE EQUIPPED THROUGHOUT WITH AN AUTOMATIC SPRINKLER SYSTEM.

OCCUPANT LOAD (VUSBC):
820 PEOPLE (802 ASSEM. OCCUPANCY + 18 BUS. OCCUPANCY)
5 OF 820 PEOPLE TO BE IN BUILDING FULL TIME

ALLOWABLE AREA CACULATIONS: (MOST RESTRICTIVE A-3)

FOR UNSEPARATED MIXED USE, USE THE MOST RESTRICTIVE (A-3)
ALLOWABLE AREA PER BOCA TABLE 503 = 9,500 SF
AREA INCREASE FACTORS:
100% FOR ALLOWABLE AREA
+ 75% INCREASE FOR STREET FRONTAGE
+ 300% INCREASE FOR AUTOMATIC SPRINKLER SYSTEM
475% = MULTIPLY FACTOR OF 4.75

9,500 SF x 4.75 = 45,125 SF ALLOWABLE

GROSS PROPOSED BUILDING AREA (VUSBC):	14,514 S.F. (1 FLR)
TOTAL (NET) FLOOR AREA (INCLUDES EXTERIOR WALLS):	13,932 S.F.
BUILDING VOLUME:	571,438 C.F.
HEIGHT RESTICTION:	65 FT PER FLR

DESIGN FLOOR LIVE LOADS: 40 PSF
NOTE: SEE FP1.1 FOR ADDITIONAL CODE INFORMATION

COMMONWEALTH OF VIRGINIA
James T. Rice
Certificate No. 3935
8/17/06
CERTIFIED ARCHITECT

VIRGINIA DEPT. OF TRANSPORTATION
FREDERICKSBURG SAFETY REST AREA AND WELCOME CENTER
I-95 SOUTH, FREDERICKSBURG, VIRGINIA
PROJECT CODE: 501-06501-007

Rawlings Wilson & Associates
ARCHITECTS PLANNERS
1100 NORTH THOMPSON STREET
RICHMOND, VIRGINIA 23230
(804) 358-9141 FAX(804) 359-5715

SHEET TITLE: GENERAL INFORMATION

DRAWN	TMC
CHECKED	EJR
RWA NO.	1890.01
DATE	8/17/06

DRAWING NO. T1.1
SHEET __ OF __

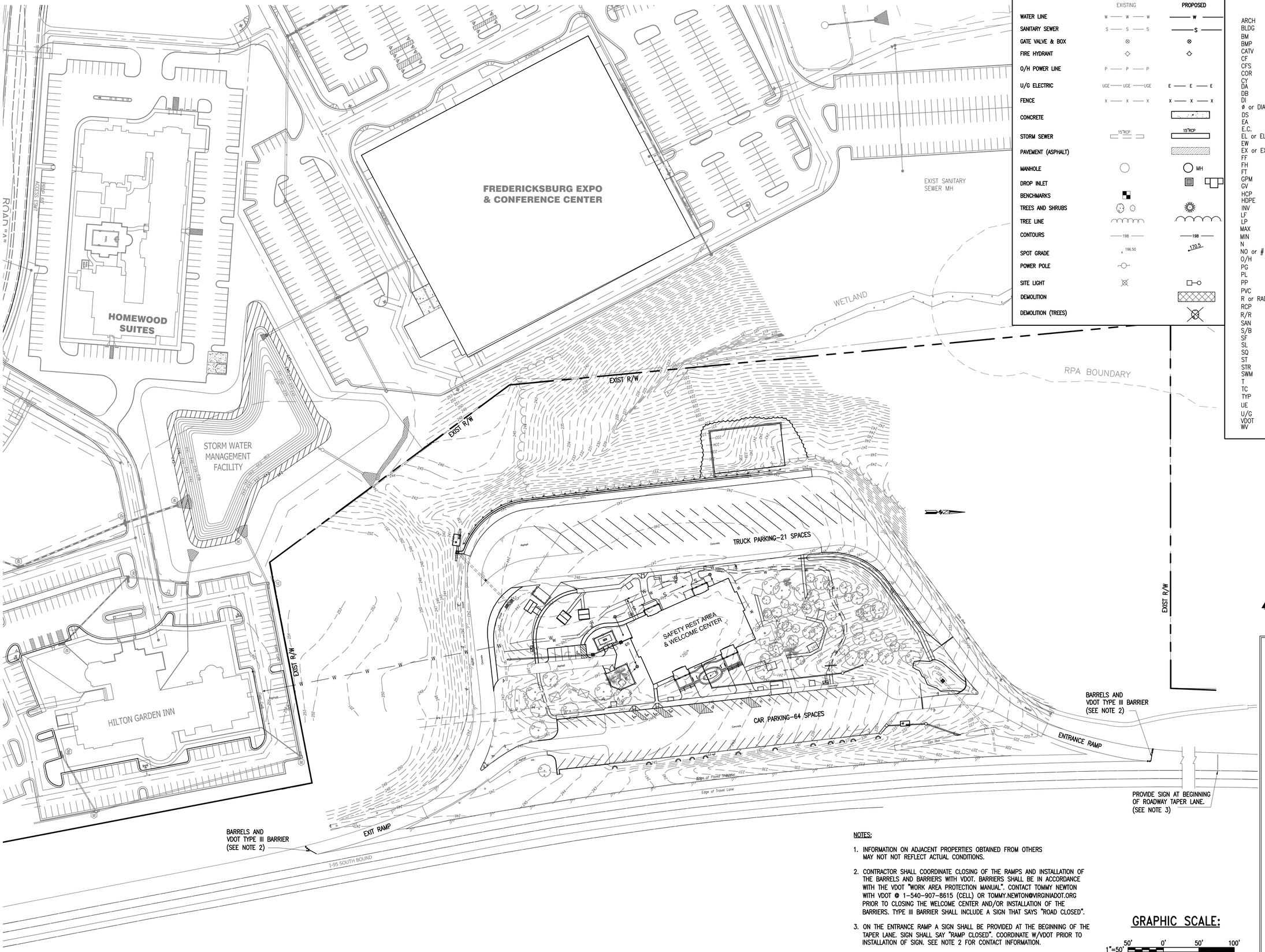

LEGEND

	EXISTING	PROPOSED
WATER LINE	W — W — W	W
SANITARY SEWER	S — S — S	S
GATE VALVE & BOX	⊗	⊗
FIRE HYDRANT	◇	◇
O/H POWER LINE	P — P — P	
U/G ELECTRIC	UGE — UGE — UGE	E — E — E
FENCE	X — X — X	X — X — X
CONCRETE		
STORM SEWER	15"RCP	15"RCP
PAVEMENT (ASPHALT)		
MANHOLE	○	○ MH
DROP INLET		
BENCHMARKS		
TREES AND SHRUBS		
TREE LINE		
CONTOURS	198	198
SPOT GRADE	x 196.50	170.5
POWER POLE		
SITE LIGHT		
DEMOLITION		
DEMOLITION (TREES)		

ABBREVIATIONS

ARCH	ARCHITECTURAL
BLDG	BUILDING
BM	BENCHMARK
BMP	BEST MANAGEMENT PRACTICES
CATV	UNDERGROUND TELEVISION CABLE
CF	CUBIC FEET
CFS	CUBIC FEET PER SECOND
COR	CORNER
CY	CUBIC YARD
DA	DRAINAGE AREA
DB	DATE BOOK
DI	DROP INLET or DUCTILE IRON
ø or DIAM	DIAMETER
DS	DOWNSPOUT
EA	EACH
E.C.	EROSION CONTROL
EL or ELEV	ELEVATION
EW	ENDWALL
EX or EXIST	EXISTING
FF	FINISHED FLOOR
FH	FIRE HYDRANT
FT	FEET
GPM	GALLONS PER MINUTE
GV	GATE VALVE or GAS VALVE
HCP	HANDICAP
HDPE	HIGH DENSITY POLYETHELENE
INV	INVERT
LF	LINEAR FEET
LP	LIGHT POLE or LOW POINT
MAX	MAXIMUM
MIN	MINIMUM
N	NORTH
NO or #	NUMBER
O/H	OVERHEAD
PG	PAGE or PAVED GUTTER
PL	PROPERTY LINE
PP	POWER POLE
PVC	POLYVINYL CHLORIDE PIPE
R or RAD	RADIUS
RCP	REINFORCED CONCRETE PIPE
R/R	RAILROAD
SAN	SANITARY
S/B	SET BACK
SF	SQUARE FEET or SILT FENCE
SL	SEWER LINE
SQ	SQUARE
ST	STREET or STATE
STR	STRUCTURE
SWM	STORMWATER MANAGEMENT
T	TELEPHONE
TC	TOP OF CURB
TYP	TYPICAL
UE	UNDERGROUND ELECTRIC
U/G	UNDERGROUND
VDOT	VIRGINIA DEPARTMENT OF TRANSPORTATION
WV	WATER VALVE

NOTES:

1. INFORMATION ON ADJACENT PROPERTIES OBTAINED FROM OTHERS MAY NOT NOT REFLECT ACTUAL CONDITIONS.
2. CONTRACTOR SHALL COORDINATE CLOSING OF THE RAMPS AND INSTALLATION OF THE BARRELS AND BARRIERS WITH VDOT. BARRIERS SHALL BE IN ACCORDANCE WITH THE VDOT "WORK AREA PROTECTION MANUAL". CONTACT TOMMY NEWTON WITH VDOT @ 1-540-907-8615 (CELL) OR TOMMY.NEWTON@VIRGINIADOT.ORG PRIOR TO CLOSING THE WELCOME CENTER AND/OR INSTALLATION OF THE BARRIERS. TYPE III BARRIER SHALL INCLUDE A SIGN THAT SAYS "ROAD CLOSED".
3. ON THE ENTRANCE RAMP A SIGN SHALL BE PROVIDED AT THE BEGINNING OF THE TAPER LANE. SIGN SHALL SAY "RAMP CLOSED". COORDINATE W/VDOT PRIOR TO INSTALLATION OF SIGN. SEE NOTE 2 FOR CONTACT INFORMATION.

GRAPHIC SCALE:

1"=50' 50' 0' 50' 100'

AUSTIN BROCKENBROUGH
& ASSOCIATES, L.L.P.
Consulting Engineers
P.O. Box 4800 Chester, Virginia 23831

COMMONWEALTH OF VIRGINIA
DAVID T. D. WARRINER
No. 018681
8.17.06
PROFESSIONAL ENGINEER

VIRGINIA DEPT. OF TRANSPORTATION
FREDERICKSBURG SAFETY REST AREA AND WELCOME CENTER
I-95 SOUTH, FREDERICKSBURG, VIRGINIA

PROJECT CODE: 501-06501-007

Rawlings Wilson & Associates
ARCHITECTS PLANNERS
1100 NORTH THOMPSON STREET
RICHMOND, VIRGINIA 23230
(804) 359-9141 FAX(804) 359-5715

SHEET TITLE	OVERALL SITE PLAN
DRAWN	RTH
CHECKED	GWA
RWA NO.	189001
DATE	8/17/06
DRAWING NO.	C1.1
SHEET ___ OF ___	

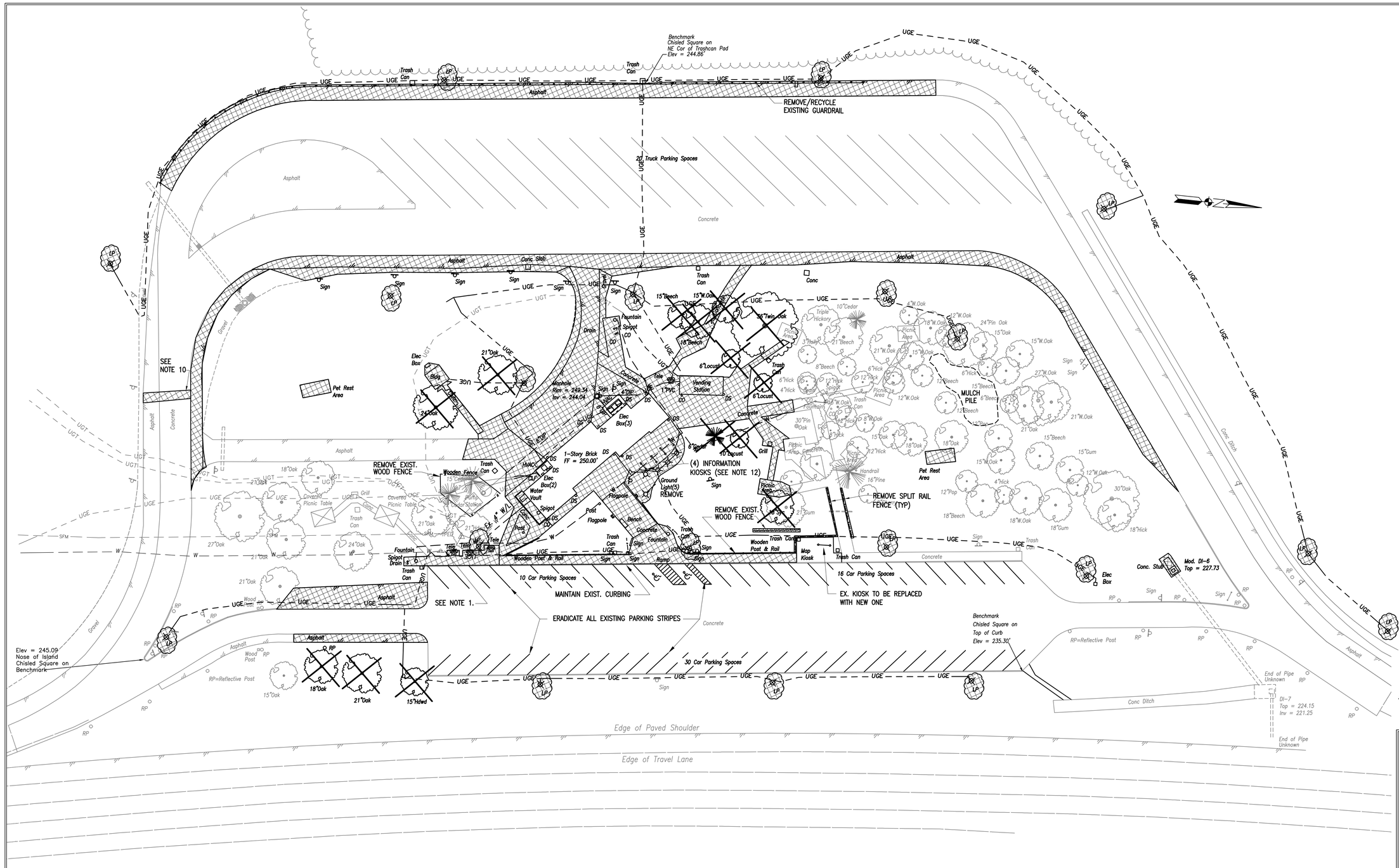

AUSTIN BROCKENBROUGH
& ASSOCIATES, L.L.P.
Consulting Engineers
P.O. Box 4800 Chester, Virginia 23831

COMMONWEALTH OF VIRGINIA
DAVID T. D. WARRINER
No. 018681
8/17/06
PROFESSIONAL ENGINEER

VIRGINIA DEPT. OF TRANSPORTATION
FREDERICKSBURG SAFETY REST
AREA AND WELCOME CENTER
I-95 SOUTH, FREDERICKSBURG, VIRGINIA
PROJECT CODE: 501-06501-007

Rawlings Wilson & Associates
ARCHITECTS PLANNERS
1100 NORTH THOMPSON STREET
RICHMOND, VIRGINIA 23230
(804) 358-9141 FAX(804) 359-5715

SHEET	CIVIL SITE
TITLE	DEMOLITION PLAN

DRAWN	RTH
CHECKED	GWA
RWA NO.	1890.01
DATE	8/17/06

DRAWING NO. C2.1
SHEET ___ OF ___

NOTES:

1. CAP ALL UTILITIES AT THE EDGE OF THE DEMOLITION AREAS.
2. REMOVE ALL EXISTING UTILITIES WITHIN AREAS OF NEW CONSTRUCTION. DO NOT ABANDON IN PLACE.
3. TREES SLATED TO BE REMOVED SHOULD HAVE ALL BRANCHES 6" AND SMALLER CHIPPED FOR MULCH AND STORED FOR FUTURE USE ON-SITE.
4. ALL DEMOLISHED MATERIALS SHALL BE RECYCLED TO THE MAXIMUM EXTENT POSSIBLE. SEE SPECIFICATION SECTION ON "CONSTRUCTION WASTE MANAGEMENT" FOR PERCENTAGES AND PROCEDURES.
5. STORE EXISTING TRASH CANS, PICNIC TABLES, FOUNTAINS, AND SIGNS FOR REUSE ON PROJECT.
6. SEE ARCHITECTURAL DRAWING D1.1 FOR DEMOLITION REQUIREMENTS FOR BUILDINGS.
7. RESET NEW BENCHMARKS WHERE EXISTING ONES WILL BE REMOVED DURING DEMOLITION ACTIVITIES.
8. COORDINATE RELOCATION OF PHONES AND EXISTING UNDERGROUND PHONE LINES WITH VERIZON.
9. REMOVE 30' WOOD POLES WITH LIGHT FIXTURES. ABANDON WIRING IN PLACE BELOW GRADE.
10. THIS PLAN MAY NOT SHOW ALL CROSSING OF EXISTING PAVEMENT FOR UTILITIES THAT WILL REQUIRE SPECIAL DEMOLITION AND REPLACEMENT.
11. EXISTING CONCRETE PICNIC TABLES SHALL BE REMOVED FROM AREAS BEING DEMOLISHED AND REUSED ON NEW PICNIC AREAS OR GIVEN TO VDOT FOR ULTIMATE DISPOSITION (OWNER'S OPTION).
12. EXISTING INFORMATION KIOSKS SHALL BE REMOVED CAREFULLY, STORED AND PROTECTED FROM THE WEATHER AND REINSTALLED IN ACCORDANCE WITH SHEET A1.6.

GRAPHIC SCALE:

1"=25' 0' 25' 50' 75'

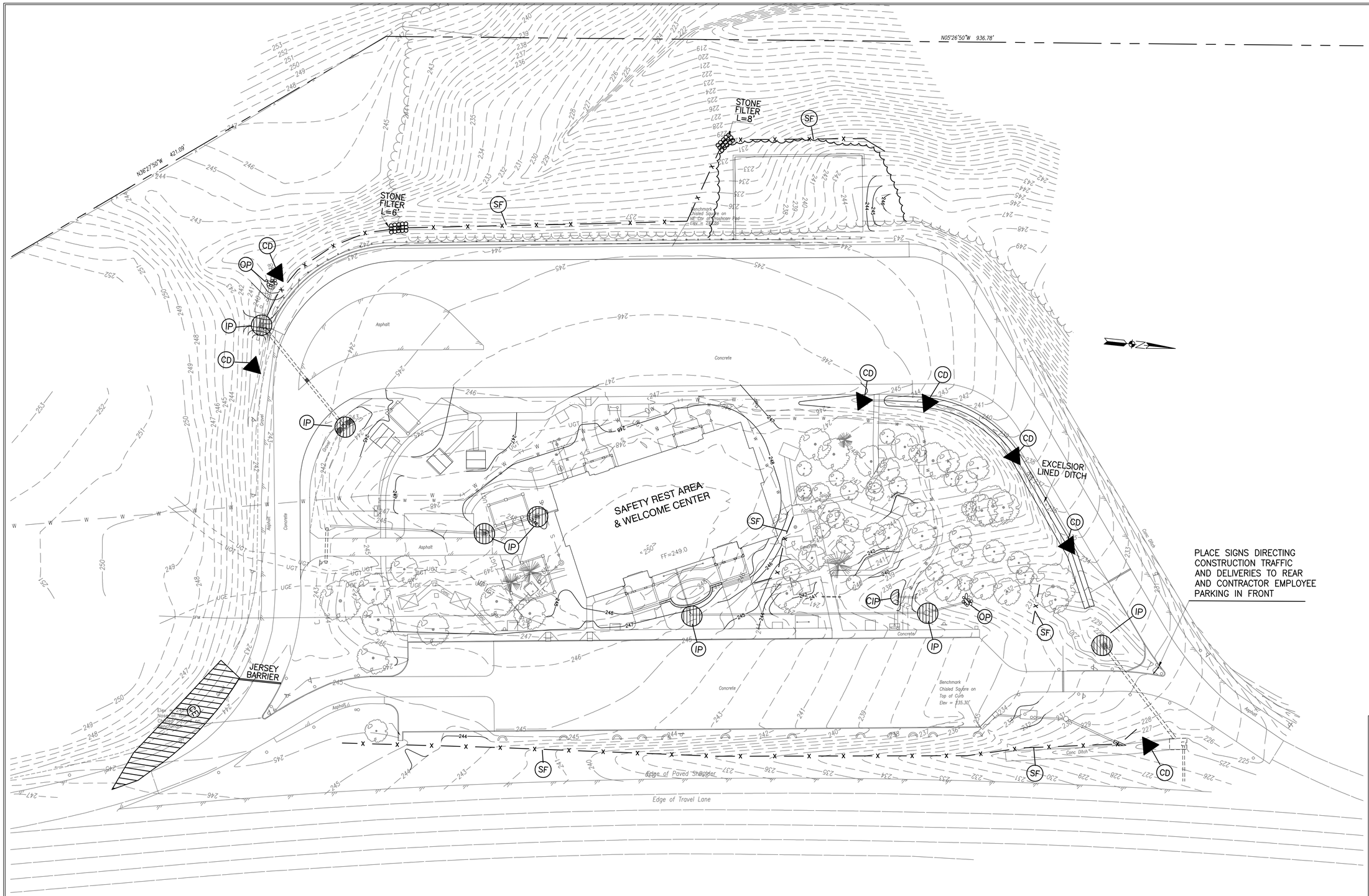

EROSION CONTROL LEGEND

- SF — SILT FENCE STD & SPEC. 3.05
- IP — INLET PROTECTION STD & SPEC. 3.07
- OP — OUTLET PROTECTION STD & SPEC 3.18
- CE — CONSTRUCTI9ON ENTRANCE STD. & SPEC. 3.02
- CD — ROCK CHECK DAM STD. & SPEC. 3.20
- CIP — CULVERT INLET PROTECTION STD. & SPEC. 3.08

GRAPHIC SCALE:

1"=30' 0' 30' 60' 90'

AUSTIN BROCKENBROUGH & ASSOCIATES, L.L.P.
Consulting Engineers
P.O. Box 4800 Chester, Virginia 23831

COMMONWEALTH OF VIRGINIA
DAVID T. D. WARRINER
No. 018681
8/17/06
PROFESSIONAL ENGINEER

VIRGINIA DEPT. OF TRANSPORTATION

FREDERICKSBURG SAFETY REST AREA AND WELCOME CENTER

I-95 SOUTH, FREDERICKSBURG, VIRGINIA

PROJECT CODE: 501-06501-007

Rawlings Wilson & Associates
ARCHITECTS PLANNERS
1100 NORTH THOMPSON STREET
RICHMOND, VIRGINIA 23230
(804) 358-9141 FAX(804) 359-5715

SHEET TITLE: EROSION AND SEDIMENT CONTROL PLAN

DRAWN	RTH
CHECKED	GWA
RWA NO.	1890.01
DATE	8/17/06

DRAWING NO. C3.1

SHEET ___ OF ___

GENERAL EROSION AND SEDIMENT CONTROL NOTES

ES-1: UNLESS OTHERWISE INDICATED, ALL VEGETATIVE AND STRUCTURAL EROSION AND SEDIMENT CONTROL PRACTICES WILL BE CONSTRUCTED AND MAINTAINED ACCORDING TO MINIMUM STANDARDS AND SPECIFICATIONS OF THE VIRGINIA EROSION AND SEDIMENT CONTROL HANDBOOK AND VIRGINIA REGULATIONS VR 625-02-00 EROSION AND SEDIMENT CONTROL REGULATIONS.

ES-2: THE PLAN APPROVING AUTHORITY MUST BE NOTIFIED ONE WEEK PRIOR TO THE PRE-CONSTRUCTION CONFERENCE, ONE WEEK PRIOR TO THE COMMENCEMENT OF LAND DISTURBING ACTIVITY, AND ONE WEEK PRIOR TO FINAL INSPECTION.

ES-3: ALL EROSION AND SEDIMENT CONTROL MEASURES ARE TO BE PLACED PRIOR TO OR AS THE FIRST STEP IN CLEARING.

ES-4: A COPY OF THE APPROVED EROSION AND SEDIMENT CONTROL PLAN SHALL BE MAINTAINED ON THE SITE AT ALL TIMES.

ES-5: PRIOR TO COMMENCING LAND DISTURBING ACTIVITIES IN AREAS OTHER THAN INDICATED ON THESE PLANS (INCLUDING, BUT NOT LIMITED TO, OFF-SITE BORROW OR WASTE AREAS), THE CONTRACTOR SHALL SUBMIT A SUPPLEMENTARY EROSION CONTROL PLAN TO THE OWNER FOR REVIEW AND APPROVAL BY THE PLAN APPROVING AUTHORITY.

ES-6: THE CONTRACTOR IS RESPONSIBLE FOR INSTALLATION OF ANY ADDITIONAL EROSION CONTROL MEASURES NECESSARY TO PREVENT EROSION AND SEDIMENTATION AS DETERMINED BY THE PLAN APPROVING AUTHORITY.

ES-7: ALL DISTURBED AREAS ARE TO DRAIN TO APPROVED SEDIMENT CONTROL MEASURES AT ALL TIMES DURING LAND DISTURBING ACTIVITIES AND DURING SITE DEVELOPMENT UNTIL FINAL STABILIZATION IS ACHIEVED.

ES-8: DURING DEWATERING OPERATIONS, WATER WILL BE PUMPED INTO AN APPROVED FILTERING DEVICE.

ES-9: THE CONTRACTOR SHALL INSPECT ALL EROSION CONTROL MEASURES PERIODICALLY AND AFTER EACH RUNOFF-PRODUCING RAINFALL EVENT. ANY NECESSARY REPAIRS OR CLEANUP TO MAINTAIN THE EFFECTIVENESS OF THE EROSION CONTROL DEVICES SHALL BE MADE IMMEDIATELY.

ES-10: THE OWNNER AND STATE INSPECTOR WILL MAKE A CONTINUING EVALUATION OF THE PERFORMANCE OF ALL EROSION CONTROL MEASURES. ADDITIONAL MEASURES OR ENHANCEMENT OF EXISTING STRUCTURES MAY BE REQUIRED.

NOTE: THE CONTRACTOR IS ENCOURAGED TO TAKE TOPSOIL SAMPLES TO A LAB FOR ANALYSIS OF FERTILIZER AND LIME NEEDS WHICH WILL SUPERSEDE THOSE QUANTITIES LISTED BELOW.

PERMANENT SEEDING SPECIFICATIONS

LIME: 4000 POUNDS/ACRE – DOLOMITIC AGRICULTURAL GROUND LIMESTONE
FERTILIZER: 500 POUNDS/ACRE – 10-10-10 OR AS RECOMMENDED THROUGH SOILS TESTING.
SEED: 400 LBS/ACRE – 95% 3 VARIETIES TURF-TYPE FESCUE – 5% ANNUAL RYE GRASS.
MULCH: 2 TONS/ACRES – DRY SMALL GRAIN STRAW OR WOOD CELLULOSE FIBER

SEE STANDARD AND SPECIFICATION 3.32 OF THE VIRGINIA EROSION AND SEDIMENT CONTROL HANDBOOK FOR ADDITIONAL INFORMATION AND REQUIREMENTS.

TEMPORARY SEEDING SPECIFICATIONS

LIME: 4000 POUNDS/ACRE – DOLOMITIC AGRICULTURAL GROUND LIMESTONE
FERTILIZER: 450 POUNDS/ACRE – 10-10-10
SEED:

PLANTING DATES	SPECIES	RATE (LBS/AC)
SEPT 1 – FEB 15	50/50 MIN OF ANNUAL RYE GRASS & WINTER RYE	50-100
FEB 16 – APRIL 30	ANNUAL RYE GRASS	60-100
MAY 1 – AUG 31	GERMAN MILLET	50

MULCH: 2 TONS/ACRES – DRY SMALL GRAIN STRAW OR WOOD CELLULOSE FIBER

SEE STANDARD AND SPECIFICATION 3.31 OF THE VIRGINIA EROSION AND SEDIMENT CONTROL HANDBOOK FOR ADDITIONAL INFORMATION AND REQUIREMENTS.

UTILITY CONSTRUCTION

UNDERGROUND UTILITY LINES SHALL BE INSTALLED IN ACCORDANCE WITH THE FOLLOWING STANDARDS IN ADDITION TO OTHER APPLICABLE CRITERIA:

A. NO MORE THAN 500 LINEAR FEET OF TRENCH MAY BE OPENED AT ONE TIME.
B. EXCAVATED MATERIAL SHALL BE PLACED ON THE UPHILL SIDE OF TRENCHES.
C. EFFLUENT FROM DEWATERING OPERATIONS SHALL BE FILTERED OR PASSED THROUGH AN APPROVED SEDIMENT TRAPPING DEVICE, OR BOTH, AND DISCHARGED IN A MANNER THAT DOES NOT ADVERSELY AFFECT FLOWING STREAMS OR OFF-SITE PROPERTY.
D. MATERIAL USED FOR BACKFILLING TRENCHES SHALL BE PROPERLY COMPACTED IN ORDER TO MINIMIZE EROSION AND PROMOTE STABILIZATION.
E. RESTABILIZATION SHALL BE ACCOMPLISHED IN ACCORDANCE WITH THESE REGULATIONS.
F. CONTRACTOR SHALL COMPLY WITH ALL APPLICABLE SAFETY REGULATIONS.

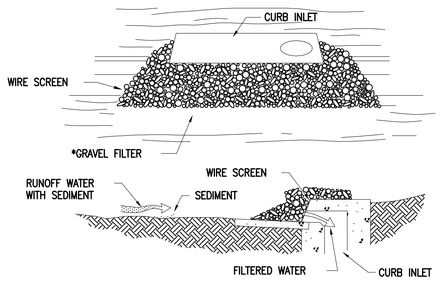

SPECIFIC APPLICATION

THIS METHOD OF INLET PROTECTION IS APPLICABLE AT CURB INLETS WHERE OVERFLOW CAPABILITY IS NECESSARY TO PREVENT EXCESSIVE PONDING IN FRONT OF THE STRUCTURE.

*GRAVEL SHALL BE VDOT #3, #357, OR #5 COARSE AGGREGATE.

STORM DRAIN INLET PROTECTION
STD & SPEC 3.07-6

NO SCALE

EROSION CONTROL NARRATIVE

PROJECT DESCRIPTION

THIS PROJECT IS A REPLACEMENT AND UPGRADE OF THE EXISTING REST AREA AND WELCOME CENTER AT THIS SITE. PROJECT INCLUDES DEMOLITION OF THE EXISTING BUILDINGS; ADDITIONAL PARKING; NEW PICNIC AREAS; DRAINAGE IMPROVEMENTS; STORMWATER MANAGEMENT AND WATER QUALITY ADDITIONS; WATERLINE EXTENSION; AND LANDSCAPING.
THE ENTIRE SITE IS WITHIN EXISTING STATE RIGHT-OF-WAY ON WHAT WOULD BE AN APPROXIMATE 16 ACRE PARCEL. THE PROJECT AREA COVERS 7 ACRES WITHIN THAT AREA.

EXISTING SITE CONDITIONS

THE EXISTING SITE IS A FULLY DEVELOPED REST AREA AND WELCOME CENTER. THE CURRENT SITE HAS NO STORMWATER MANAGEMENT FEATURES AND DRAINAGE AND PARKING ISSUES. THE SITE EITHER DRAINS TO A STORM SEWER SYSTEM UNDER I-95 OR TO A RAVINE THAT RUNS ACROSS THE BACK OF THE PROPERTY. THE SITE HAS SCATTERED HARDWOODS AND SOME LANDSCAPING.

CRITICAL AREAS

THERE SHOULD NOT BE ANY SERIOUS EROSION PROBLEMS WITH CONSTRUCTION OF THIS PROJECT. SEDIMENT LADEN RUNOFF FROM THE PROJECT MUST BE CAPTURED AND FILTERED BEFORE IT IS RELEASED INTO RECEIVING DRAINAGE CHANNELS. DITCHES AND SWALES WILL HAVE TO BE PROTECTED FROM EROSION.

SOILS

A GEOTECHNICAL STUDY AND SOIL BORING PROGRAM HAS BEEN PERFORMED ON THIS SITE BY FROEHLING & ROBERTSON.

PREDOMINATE SOIL TYPES BASED ON THAT REPORT SHOW CL & SC SOILS WERE PREVIOUSLY USED FOR FILLS ON THE SITE
NATIVE SOILS INCLUDE CL, MH, SC & SM. THE MH AREAS WILL NEED TO BE EVALUATED CLOSELY DURING CONSTRUCTION.

OFFSITE AREAS

THE CONTRACTOR WILL BE RESPONSIBLE FOR SECURING SUITABLE OFFSITE AREAS FOR DISPOSAL OF UNSITABLE AND SURPLUS MATERIAL AND FOR SECURING OFFSITE BORROW AREAS IF REQUIRED.

EROSION & SEDIMENT CONTROL MEASURES

TEMPORARY SILT FENCES SHALL BE INSTALLED AND MAINTAINED AT THE BOTTOM OF ALL PROPOSED FILL AREAS. STONE FILTERS WILL BE INSTALLED AT LOW POINTS IN THE SILT FENCE. ROCK CHECK DAMS WILL BE PLACED IN NEW AND EXISTING DITCHES.
CULVERT INLET PROTECTION AND STD. INLET PROTECTION SHALL BE INSTALLED AND MAINTAINED TO PREVENT SILT FROM ENTERING CULVERT PIPES AND THE STORM SEWER SYSTEMS.
PERMANENT OUTLET PROTECTION AT PIPE OUTFALLS IS PROPOSED.
A STONE CONSTRUCTION ENTRANCE WILL BE UTILIZED TO PREVENT TRACKING OF MUD AND DUST ONTO THE INTERSTATE.

TEMPORARY OR PERMANENT SOIL STABILIZATION SHALL BE APPLIED TO DENUDED AREAS WITHIN SEVEN DAYS AFTER FINAL GRADE IS REACHED ON ANY PORTION OF THE SITE. TEMPORARY SOIL STABILIZATION SHALL BE APPLIED WITHIN SEVEN DAYS TO DENUDED AREAS NOT AT FINAL GRADE THAT WILL REMAIN DORMANT FOR MORE THAN 30 DAYS.

STORM WATER RUNOFF

BIO FILTER AREAS WILL BE UTILIZED TO DECREASE THE VOLUME OF RUNOFF FROM THE PROJECT. HYDRODYNAMIC SEPARATORS WILL BE INSTALLED AT TWO LOCATIONS TO TREAT EXISTING AND PROPOSED IMPERVIOUS AREAS.
NO FLOODING OR DEGRADATION OF DOWN STREAM CHANNELS IS ANTICIPATED.

CONSTRUCTION SEQUENCE

1. HOLD PRE-CONSTRUCTION MEETING WITH CIVIL ENGINEER, SITE WORK CONTRACTOR, AND STATE OFFICIALS TO GO OVER PLANS AND PROCEDURES.
2. REMOVE ALL TREES SLATED FOR REMOVAL. CHIP BRANCHES AND STORE AT DESIGNATED LOCATIONS.
3. INSTALL CONSTRUCTION ENTRANCE PAD AND JERSEY BARRIER.
4. INSTALL SILT FENCE AT DESIGNATED LOCATIONS.
5. INSTALL THE TWO CHECK DAMS AT THE END OF THE TWO MAIN OUTFALLS.
6. BEGIN SITE GRADING. INSTALL CHECK DAMS AND INLET PROTECTION AS THOSE AREAS ARE GRADED.
7. INSTALL SANITARY SEWER, STORM SEWER AND WATERLINES.
8. INSTALL OTHER UTILITY LINES ACROSS SITE.
9. INSTALL NEW CURBING.
10. FINE GRADE ROADS AND PARKING AREAS AND INSTALL BASE STONE ON ALL AREAS TO BE PAVED.
11. INSTALL NEW CONCRETE AND ASPHALT PAVEMENT,
12. INSTALL SIDEWALKS AND PICNIC AREAS.
13. INSTALL SITE LIGHTING AND GUARD RAIL.
14. INSTALL LANDSCAPING.
15. FINE GRADE SITE AND APPLY TOPSOIL, FERTILIZER, SEED AND MULCH.
16. REPAIR ALL ERODED AREAS AND RESEED ALL BARE AREAS.
17. INSTALL BIO-FILTER AREAS ONCE UPSTREAM AREAS ARE COMPLETELY STABILIZED.
18. INSPECT ENTIRE SITE FOR STABILIZATION AND REQUEST FINAL INSPECTION.

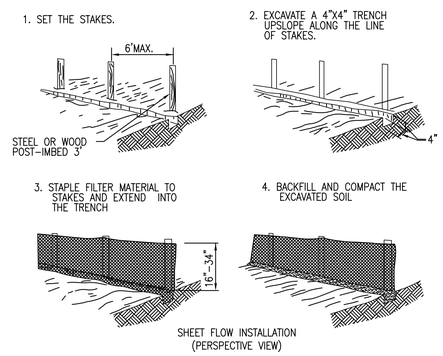

TEMPORARY SILT FENCE
STD & SPEC 3.05

NO SCALE (SF)

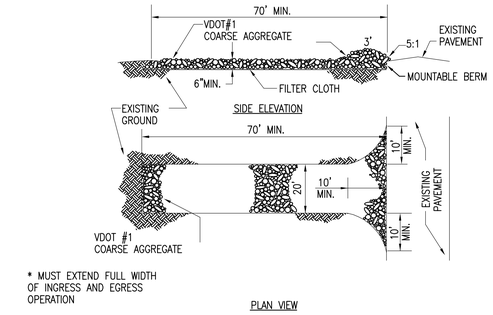

STONE CONSTRUCTION ENTRANCE
STD & SPEC 3.02

NO SCALE (CE)

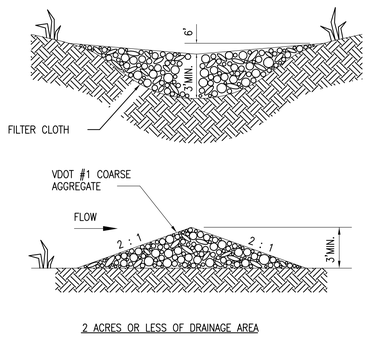

ROCK CHECK DAM
STD & SPEC 3.20

NO SCALE (CD)

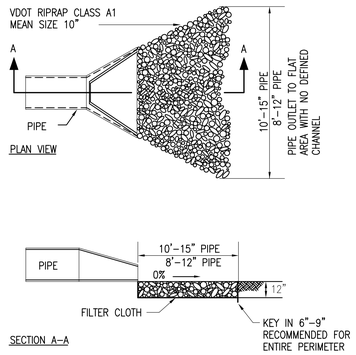

OUTLET PROTECTION
STD & SPEC 3.18-1

NO SCALE (OP)

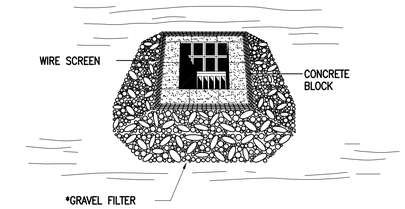

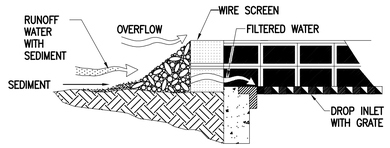

SPECIFIC APPLICATION

THIS METHOD OF INLET PROTECTION IS APPLICABLE WHERE HEAVY FLOWS ARE EXPECTED AND WHERE AN OVERFLOW CAPACITY IS NECESSARY TO PREVENT EXCESSIVE PONDING AROUND THE STRUCTURE.

* GRAVEL SHALL BE VDOT #3, #357, OR #5 COARSE AGGREGATE.

STORM DRAIN INLET PROTECTION
STD & SPEC 3.07-3

NO SCALE

AUSTIN BROCKENBROUGH & ASSOCIATES, L.L.P.
Consulting Engineers
P.O. Box 4800 Chester, Virginia 23831

COMMONWEALTH OF VIRGINIA
DAVID T. D. WARRINER
No. 018681
8-17-06
PROFESSIONAL ENGINEER

VIRGINIA DEPT. OF TRANSPORTATION
FREDERICKSBURG SAFETY REST AREA AND WELCOME CENTER
I-95 SOUTH, FREDERICKSBURG, VIRGINIA
PROJECT CODE: 501-06501-007

Rawlings Wilson & Associates
ARCHITECTS PLANNERS
1100 NORTH THOMPSON STREET
RICHMOND, VIRGINIA 23230
(804) 358-8141 FAX(804) 359-5715

SHEET TITLE: EROSION CONTROL DETAILS

DRAWN	RTH
CHECKED	GWA
RWA NO.	1890.01
DATE	8/17/06

DRAWING NO. C3.2
SHEET ___ OF ___

NOTES:

1. SEE SHEET C5.2 FOR LAYOUT OF CIVIL SITE AREA AROUND WELCOME CENTER AND SAFETY REST AREA.
2. LOCATION OF STONE DUST PATH SHOWN IS APPROXIMATE. CONTRACTOR SHALL LOCATE PATH TO REDUCE IMPACT ON EXISTING TREES, TOPOGRAPHY, ETC. COORDINATE WITH ENGINEER PRIOR TO CONSTRUCTION. FOR DETAIL SEE SHEET C7.1.
3. ASPHALT PATH SHOWN BETWEEN BUS PARKING AREA AND EMPLOYEE PARKING AREA IS IN APPROXIMATE LOCATION. CONTRACTOR SHALL LOCATE TO REDUCE IMPACT ON EXISTING TREES, TOPOGRAPHY, ETC. COORDINATE LOCATION WITH ENGINEER PRIOR TO CONSTRUCTION DETAIL SHEET C7.1.
4. LOCATE CONCRETE WALKS SERVING PICNIC AREAS WHERE SHOWN. CONNECT TO EXISTING AND NEW CONCRETE WALK AT EXISTING GRADE.
5. INCLUDE IN BASE BID THE FOLLOWING AS IT PERTAINS TO EXISTING PAVEMENT:
   A. PROVIDE 500' OF CRACK REPAIR AT JOINTS.
   B. PROVIDE 33 SQ.YDS OF CONCRETE REMOVAL AND REPLACEMENT FOR VARIOUS DAMAGED AREAS. (ASSUME 10" DEPTH ON CONCRETE)
   C. PROVIDE 50 SQ.YDS. OF ASPHALT TO REPAIR VARIOUS POTHOLES AND CRACKED AREAS. (ASSUME 8" DEPTH ON ASPHALT)
   D. STAIN REMOVAL AND POWER WASHING OF ALL EXISTING CONCRETE PAVEMENT AND SIDEWALKS.

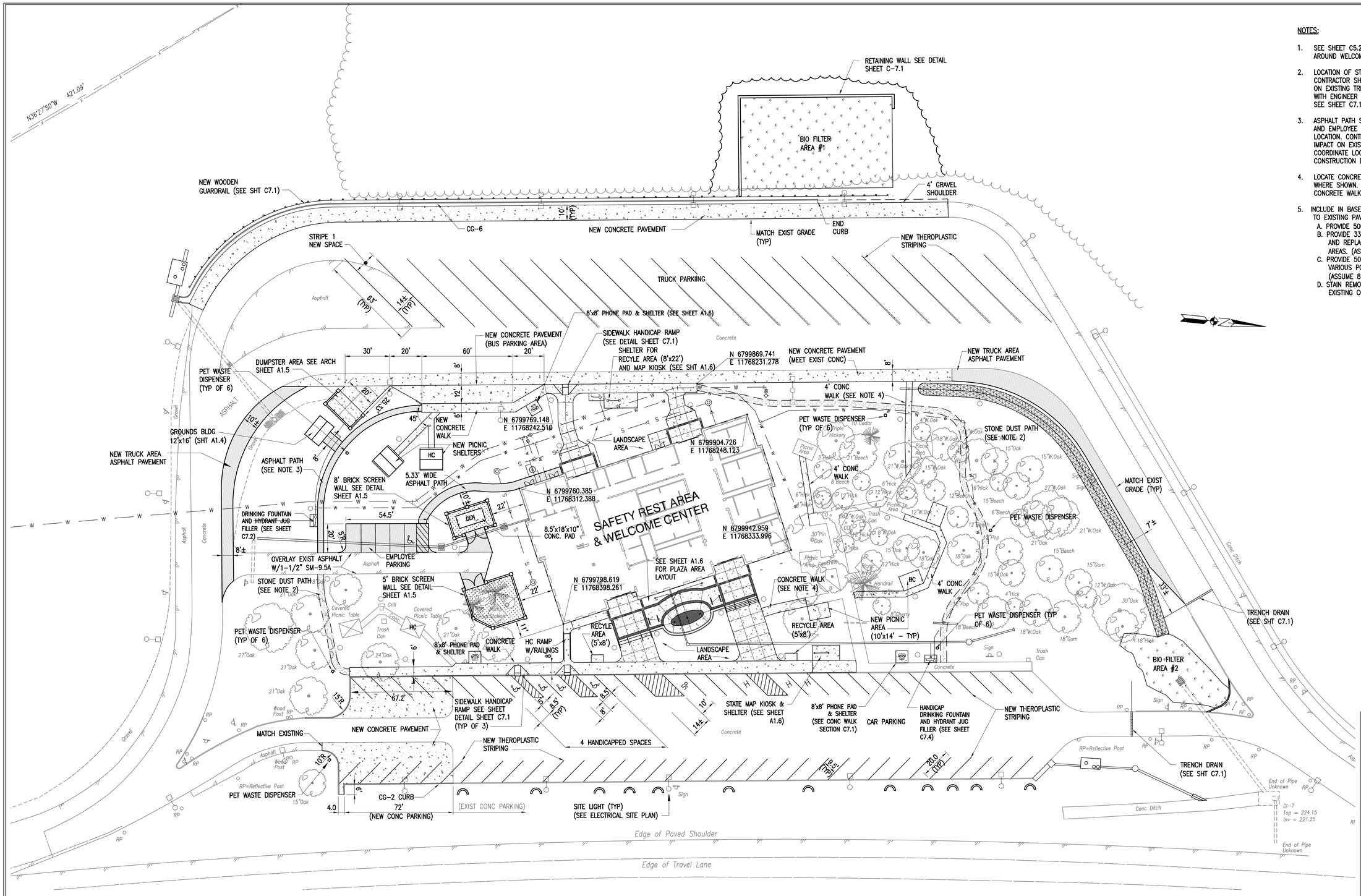

LEGEND

H = HYBRID VEHICLE PARKING

SP = STATE POLICE VEHICLE PARKING

GRAPHIC SCALE:

1"=25' 0' 25' 50' 75'

AUSTIN BROCKENBROUGH & ASSOCIATES, L.L.P.
Consulting Engineers
P.O. Box 4800 Chester, Virginia 23831

COMMONWEALTH OF VIRGINIA
DAVID T. D. WARRINER
No. 018681
8/17/06
PROFESSIONAL ENGINEER

VIRGINIA DEPT. OF TRANSPORTATION
FREDERICKSBURG SAFETY REST AREA AND WELCOME CENTER
I-95 SOUTH, FREDERICKSBURG, VIRGINIA

PROJECT CODE: 501-06501-007

Rawlings Wilson & Associates
ARCHITECTS PLANNERS
1100 NORTH THOMPSON STREET
RICHMOND, VIRGINIA 23230
(804) 359-9141 FAX(804) 359-5715

SHEET TITLE: LAYOUT PLAN

DRAWN	RTH
CHECKED	GWA
RWA NO.	1890.01
DATE	8/17/06

DRAWING NO. C4.1

SHEET ___ OF ___

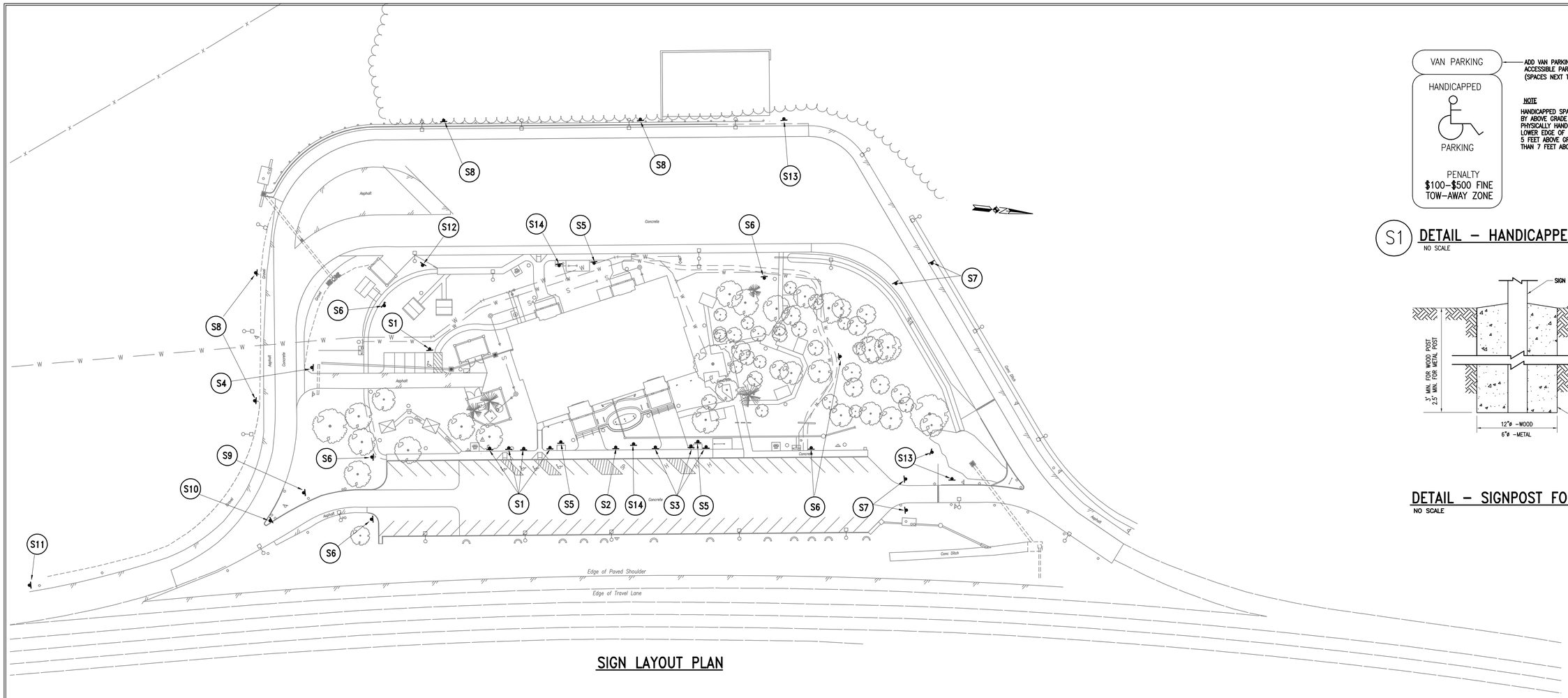

SIGN LAYOUT PLAN

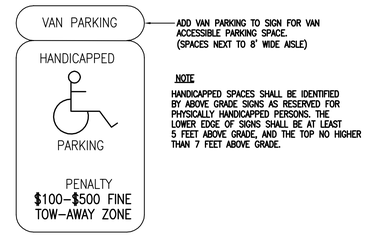

ADD VAN PARKING TO SIGN FOR VAN ACCESSIBLE PARKING SPACE. (SPACES NEXT TO 8' WIDE AISLE)

NOTE

HANDICAPPED SPACES SHALL BE IDENTIFIED BY ABOVE GRADE SIGNS AS RESERVED FOR PHYSICALLY HANDICAPPED PERSONS. THE LOWER EDGE OF SIGNS SHALL BE AT LEAST 5 FEET ABOVE GRADE, AND THE TOP NO HIGHER THAN 7 FEET ABOVE GRADE.

S1 DETAIL – HANDICAPPED PARKING SIGN

NO SCALE

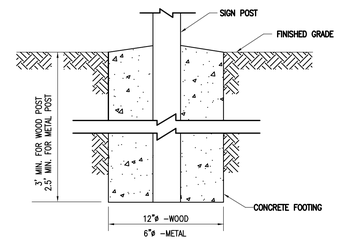

DETAIL – SIGNPOST FOUNDATION

NO SCALE

SIGN LEGEND

SIGN NO.	SIGN	SIZE	MUTCD NO.
S1	SEE HANDICAPPED PARKING SIGN DETAIL (THIS SHEET)	12" X 18"	
S2	PARKING FOR STATE POLICE	12" X 18"	R7–8 (MODIFIED FOR TEXT)
S3	HYBRID VEHICLES ONLY	12" X 18"	R7–8 (MODIFIED FOR TEXT)
S4	STOP	30" X 30"	R1–1
S5	RECYCLE CENTER	24" X 12"	R5–10C (MODIFIED FOR TEXT)
S6	ALL PETS MUST REMAIN ON LEASH. USE DOGGIE BAGS AND DISPOSE IN TRASH CANS.	12" X 18"	R7–8 (MODIFIED FOR TEXT)
S7	WRONG WAY	36" X 24"	R5–9

SIGN LEGEND

SIGN NO.	SIGN	SIZE	MUTCD NO.
S8	ONE WAY	36" X 12"	R6–1
S9		24" X 24"	R3–1
S10	YIELD	36" X 36" X 36"	R–1–2
S11		30" X 30"	W4–1
S12	BUS PARKING ONLY	30" X 24"	R8–4 (MODIFIED FOR TEXT)
S13	BIO-FILTER AREA TO TREAT AND REDUCE STORM RUNOFF	18" X 12"	R7–2A (MODIFIED FOR TEXT)
S14	NO SMOKING ALLOWED WITHIN 25' OF BUILDING	18" X 12"	R7–5 (MODIFIED FOR TEXT)

NOTES:

(1) NEW SIGNS SHALL BE PREPARED IN OCCORDANCE WITH THE MANUAL ON UNIFORM TRAFFIC CONTROL DEVICES (MUTCD).

(2) ALL EXISTING SIGNS NOT DEMOLISHED OR INTERFERED WITH DURING DEMOLITION AND/OR CONSTRUCTION SHALL REMAIN IN PLACE.

(3) ALL EXISTING SIGNS WITHIN DEMOLISHED AREAS SHALL BE CAREFULLY REMOVED AND DELIVERED TO VDOT FOR ULTIMATE DISPOSITION.

(4) TYPICAL MOUNTING HEIGHTS FOR NEW SIGNS SHALL BE AS RECOMENDED IN THE MUTCD MANUAL.

GRAPHIC SCALE:

1"=40' 0' 40' 80' 120'

AUSTIN BROCKENBROUGH & ASSOCIATES, L.L.P.
Consulting Engineers
P.O. Box 4800 Chester, Virginia 23831

COMMONWEALTH OF VIRGINIA
DAVID T. D. WARRINER
No. 018681
8/17/06
PROFESSIONAL ENGINEER

VIRGINIA DEPT. OF TRANSPORTATION
FREDERICKSBURG SAFETY REST AREA AND WELCOME CENTER
I-95 SOUTH, FREDERICKSBURG, VIRGINIA
PROJECT CODE: 501-06501-007

Rawlings Wilson & Associates
ARCHITECTS PLANNERS
1100 NORTH THOMPSON STREET
RICHMOND, VIRGINIA 23230
(804) 359-9141 FAX(804) 359-5715

SHEET TITLE: SIGN LAYOUT

DRAWN	RJD
CHECKED	GWA
RWA NO.	1890.01
DATE	8/17/06

DRAWING NO. C4.2
SHEET ___ OF ___

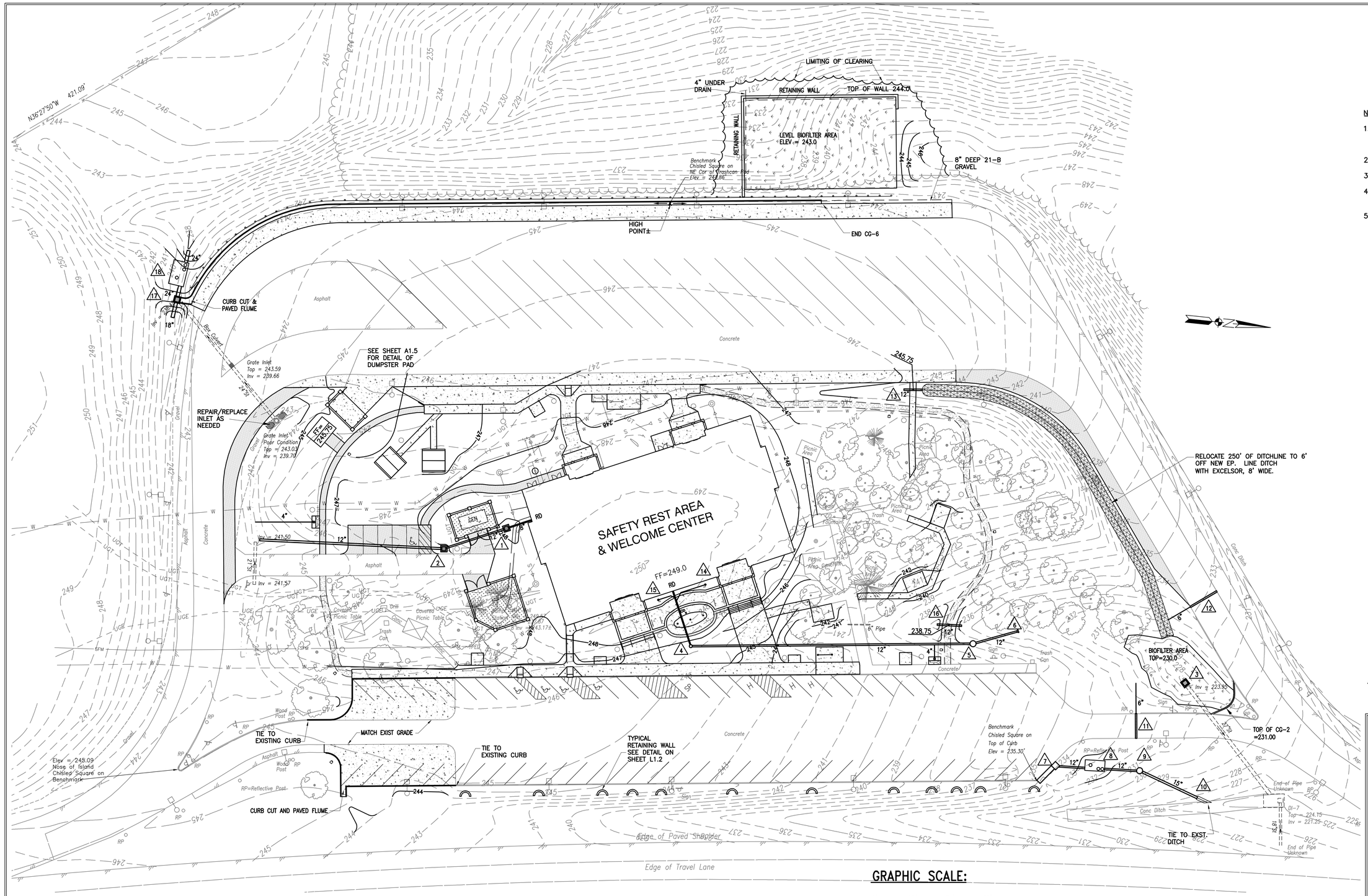

NOTES

1. MATCH EXISTING CONTROL AND EXPANSION JOINT PATTERNS AND SPACING WITH NEW CONCRETE PAVEMENT.
2. FOR UTILTIY PROFILES SEE SH C8.1
3. FOR STORMWATER PROFILES SEE SH C8.1
4. CONCRETE SPLASH BLOCKS REQUIRED AT ALL DOWNSPOUTS ONTO GRASS AREAS.
5. SEE SHEET C7.2 FOR DETAILS ON 4" DRAINS AT FOUNTAIN/JUG FILLERS.

GRAPHIC SCALE:

1"=25' 0' 25' 50' 75'

DRAINAGE SUMMARY

BLDG TO STR. 1	18' OF 8" HDPE @ 5.00% INV IN=246.75 INV OUT=245.85
STR. 1	DI-1 TOP=247.85 H=2.35'
STR. 1 TO STR. 2	44.5' OF 12" RCP @ 2.00% INV IN=245.50 INV OUT=244.61
STR. 2	DI-1 TOP=247.85 H=3.85'
STR. 2 TO OUTLET	122' OF 15" RCP @ 1.64% INV IN=244.00 INV OUT=242.00
STR. 3	DI-7 TOP=230.50 H=6.55' TYPE III GRATE
BLDG TO STR. 4	38' OF 8" HDPE @ 3.00% W/(2) 8x4 WYES INV IN=242.68 INV OUT=241.54
STR. 4	24" NYLOPLAST DRAIN BASIN TOP=246.75 SOLID GRATE
STR. 4 TO STR. 5	185' OF 12" HDPE @ 4.36% INV IN=241.40 INV OUT=233.32
STR. 5	MH-2 TOP=236.80 H=3.58'
STR. 5 TO STR. 6	28' OF 12" RCP @ 1.00% INV IN=233.22 INV OUT=232.94
STR. 6	12" ES-1 @ 1.00% INV IN=232.94 INV OUT=232.90
STR. 7	DI-3B L=16' TOP=235.25± MATCH EX. H=5.25'±
STR. 7 TO STR. 8	20' OF 12" RCP @ 7.50% INV IN=230.00 INV OUT=228.50
STR. 8	VORTECHS MODEL 4000 STORMWATER TREATMENT SYSTEM (OR EQUAL) TOP=232.50
STR. 8 TO STR. 9	23' OF 12" RCP @ 8.26% INV IN=228.50 INV OUT=226.60
STR. 9	MH-2 TOP= 230.60 H=4.10'
STR. 9 TO STR. 10	42' OF 15" RCP @ 1.79% INV IN=226.50 INV OUT=225.75
STR. 10	8 LF OF PG-2A TYPE E D=8"
STR. 11	16 LF OF 12" TRENCH DRAIN. SLOPED BTM MIN DEPTH=12" H20 SS GRATE
STR. 11 TO OUTLET	18' OF 6" HDPE W/ EW-12 USE BTM OUTLET ON TRENCH DRAIN
STR. 12	20 LF OF 12" TRENCH DRAIN. SLOPED BTM MIN DEPTH=12" H20 SS GRATE
STR. 12 TO OUTLET	18' OF 6" HDPE W/ EW-12 USE BTM OUTLET ON TRENCH DRAIN
STR. 13	12' OF 12" RCP @ 2.50% INV IN=243.30 INV OUT=243.00
STR. 14	6" IN-LINE DRAIN TOP=248.00 INV=245.00
STR. 14A	24 LF OF 4" HDPE @ 2.08%
STR. 15	6" IN-LINE DRAIN TOP=248.00 INV=245.00
STR. 15A	12 LF OF 4" HDPE @ 4.16%
STR. 16	16' OF 12" RCP @ 3.12% INV IN=236.25 INV OUT=235.75
TO STR. 17	10' OF 18" RCP @ 4.00% INV IN=238.90 INV OUT=238.50
STR. 17	DI-7 TOP=242.20 H=3.81' TYPE III GRATE
STR. 17 TO STR. 18	7' OF 24" RCP @ 2.00% INV IN=238.39 INV OUT=238.25
STR. 18	VORTECHS MODEL 9000 STORMWATER TREATMENT SYSTEM (OR EQUAL) TOP=242.25
STR. 18 TO OUTLET	8' OF 24" RCP @ 1.87% INV IN=238.25 INV OUT=238.10

AUSTIN BROCKENBROUGH & ASSOCIATES, L.L.P.
Consulting Engineers
P.O. Box 4800 Chester, Virginia 23831

COMMONWEALTH OF VIRGINIA
DAVID T. D. WARRINER
No. 018681
8-17-06
PROFESSIONAL ENGINEER

VIRGINIA DEPT. OF TRANSPORTATION
FREDERICKSBURG SAFETY REST AREA AND WELCOME CENTER
I-95 SOUTH, FREDERICKSBURG, VIRGINIA

PROJECT CODE: 501-06501-007

Rawlings Wilson & Associates
ARCHITECTS PLANNERS
1100 NORTH THOMPSON STREET
RICHMOND, VIRGINIA 23230
(804) 358-8141 FAX(804) 359-5715

SHEET GRADING AND
TITLE DRAINAGE PLAN

DRAWN RTH
CHECKED GWA
RWA NO. 189001
DATE 8/17/06

DRAWING NO. C5.1
SHEET ___ OF ___

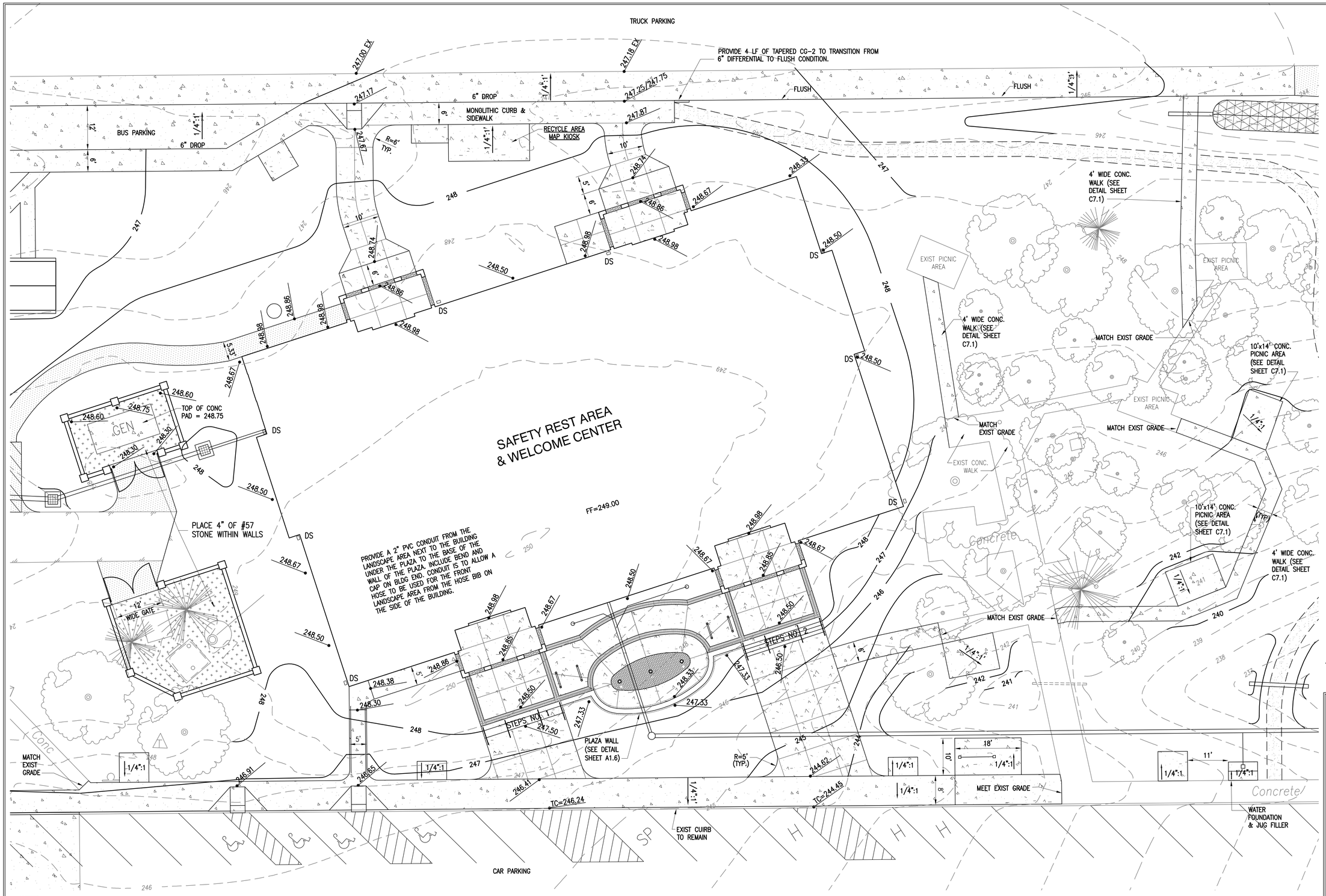

NOTES:

1. FOR LOCATION OF NEW BUILDINGS SEE SHEET C4.1 FOR COORDINATES.
2. SEE SHEET C7.2 FOR DETAILS OF STEPS AND RAILINGS.
3. PROVIDE MINOR FILLING AT EXISTING PICNIC AREAS TO ELIMINATE DROP OFFS GREATER THAN 2". FILL TO BE COMPACTED TO 90% AND SEEDED OR MULCHED.
4. PROVIDE CONCRETE SPLASH BLOCKS AT ALL DOWNSPOUTS. (DS)

GRAPHIC SCALE:

1"=10' 0' 10' 20' 30'

AUSTIN BROCKENBROUGH & ASSOCIATES, L.L.P.
Consulting Engineers
P.O. Box 4800 Chester, Virginia 23831

COMMONWEALTH OF VIRGINIA
DAVID T. D. WARRINER
No. 018681
8-17-06
PROFESSIONAL ENGINEER

VIRGINIA DEPT. OF TRANSPORTATION
FREDERICKSBURG SAFETY REST AREA AND WELCOME CENTER
I-95 SOUTH, FREDERICKSBURG, VIRGINIA
PROJECT CODE: 501-06501-007

Rawlings Wilson & Associates
ARCHITECTS PLANNERS
1100 NORTH THOMPSON STREET
RICHMOND, VIRGINIA 23230
(804) 358-9141 FAX(804) 359-5715

SHEET TITLE: SPOT SHOTS

DRAWN	RTH
CHECKED	GWA
RWA NO.	1890.01
DATE	8/17/06

DRAWING NO. C5.2
SHEET ___ OF ___

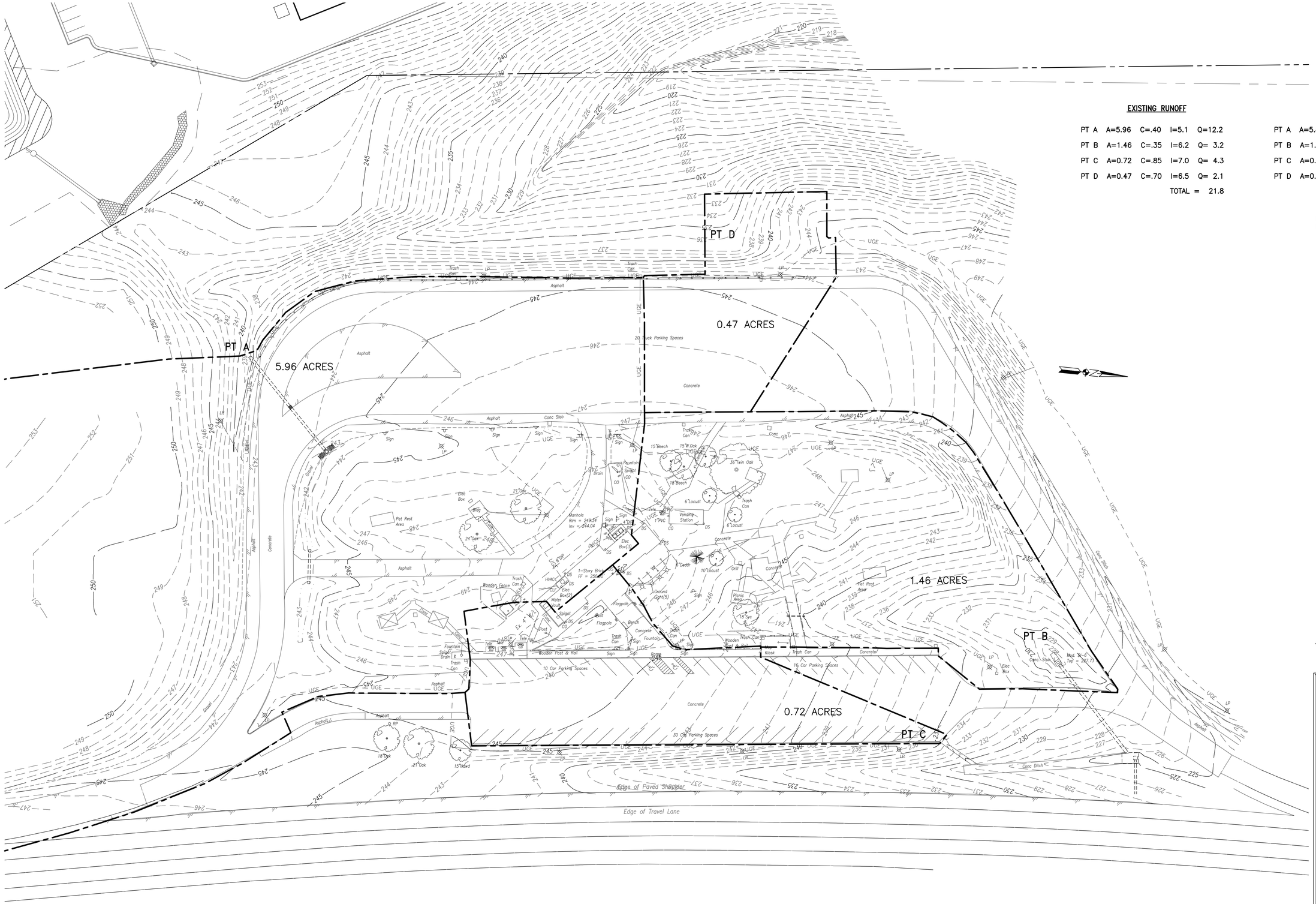

EXISTING RUNOFF

PT A	A=5.96	C=.40	I=5.1	Q=12.2
PT B	A=1.46	C=.35	I=6.2	Q= 3.2
PT C	A=0.72	C=.85	I=7.0	Q= 4.3
PT D	A=0.47	C=.70	I=6.5	Q= 2.1
			TOTAL =	21.8

PROPOSED RUNOFF

PT A	A=5.80	C=.45	I=5.1	Q=13.3
PT B	A=1.39	C=.40	I=6.3	Q= 3.5-61%=1.4
PT C	A=0.77	C=.85	I=7.0	Q= 4.6
PT D	A=0.56	C=.68	I=6.5	Q= 2.5-98%=0.1
			TOTAL =	19.4

NOTE: REDUCTIONS FOR AREAS B & D
FROM RUNOFF INFILTRATING INTO GROUND

GRAPHIC SCALE:

1"=30' 0' 30' 60' 90'

AUSTIN BROCKENBROUGH
& ASSOCIATES, L.L.P.
Consulting Engineers
P.O. Box 4800 Chester, Virginia 23831

COMMONWEALTH OF VIRGINIA
DAVID T. D. WARRINER
No. 018681
8/17/06
PROFESSIONAL ENGINEER

VIRGINIA DEPT. OF TRANSPORTATION
FREDERICKSBURG SAFETY REST AREA AND WELCOME CENTER
I-95 SOUTH, FREDERICKSBURG, VIRGINIA

PROJECT CODE: 501-06501-007

Rawlings Wilson & Associates
ARCHITECTS PLANNERS
1100 NORTH THOMPSON STREET
RICHMOND, VIRGINIA 23230
(804) 358-9141 FAX(804) 359-5715

SHEET	EXISTING
TITLE	HYDROLOGY

DRAWN	RTH
CHECKED	GWA
RWA NO.	189001
DATE	8/17/06

DRAWING NO. C5.3
SHEET ___ OF ___

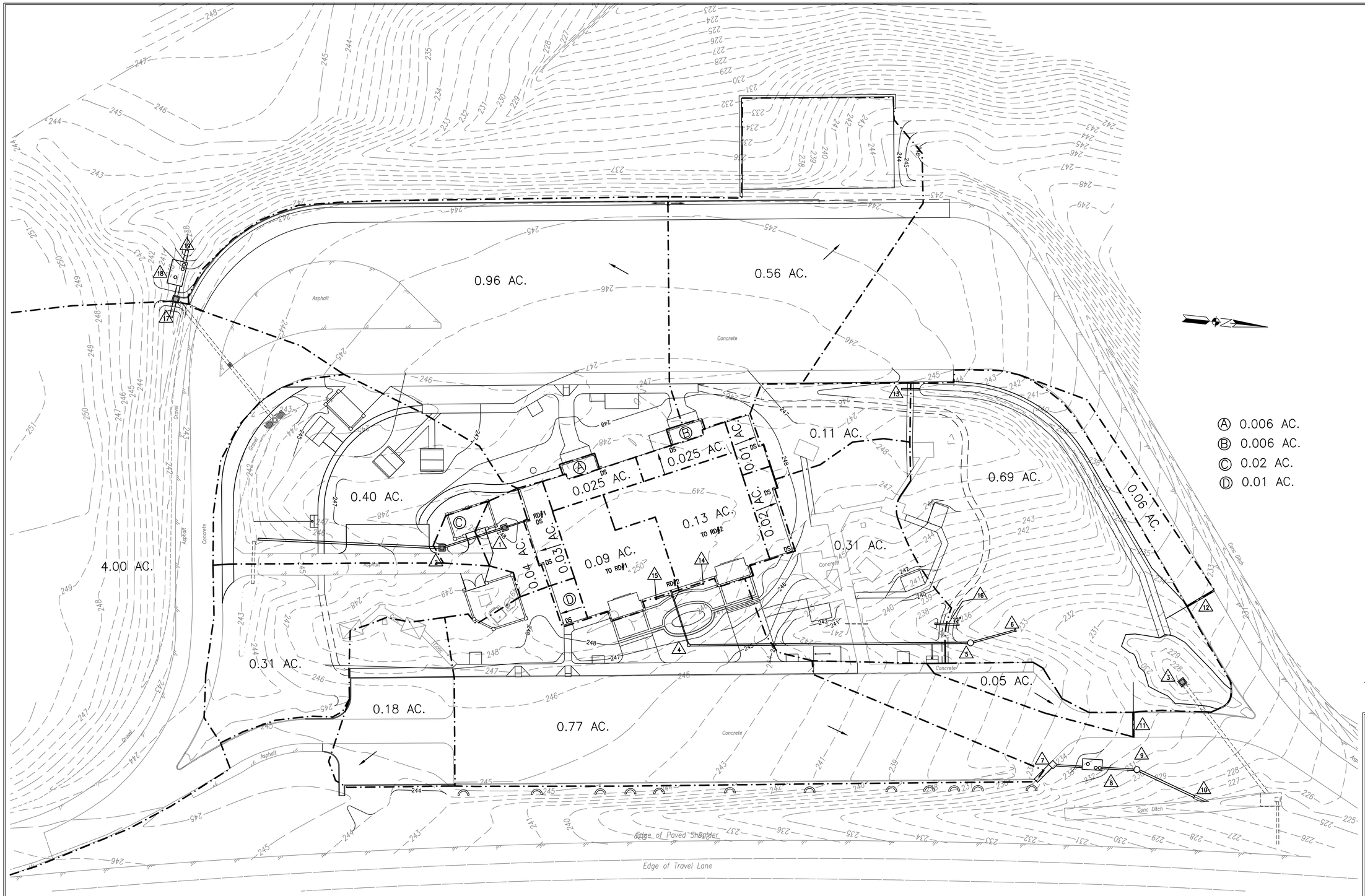

GRAPHIC SCALE:

1"=25' 0' 25' 50' 75'

AUSTIN BROCKENBROUGH & ASSOCIATES, L.L.P.
Consulting Engineers
P.O. Box 4800 Chester, Virginia 23831

COMMONWEALTH OF VIRGINIA
DAVID T. D. WARRINER
No. 018681
8-17-06
PROFESSIONAL ENGINEER

VIRGINIA DEPT. OF TRANSPORTATION
FREDERICKSBURG SAFETY REST AREA AND WELCOME CENTER
I-95 SOUTH, FREDERICKSBURG, VIRGINIA

PROJECT CODE: 501-06501-007

Rawlings Wilson & Associates
ARCHITECTS PLANNERS
1100 NORTH THOMPSON STREET
RICHMOND, VIRGINIA 23230
(804) 358-9141 FAX(804) 359-5715

SHEET TITLE	PROPOSED HYDROLOGY
DRAWN	RTH
CHECKED	GWA
RWA NO.	1890.01
DATE	8/17/06

DRAWING NO. C5.4
SHEET ___ OF ___

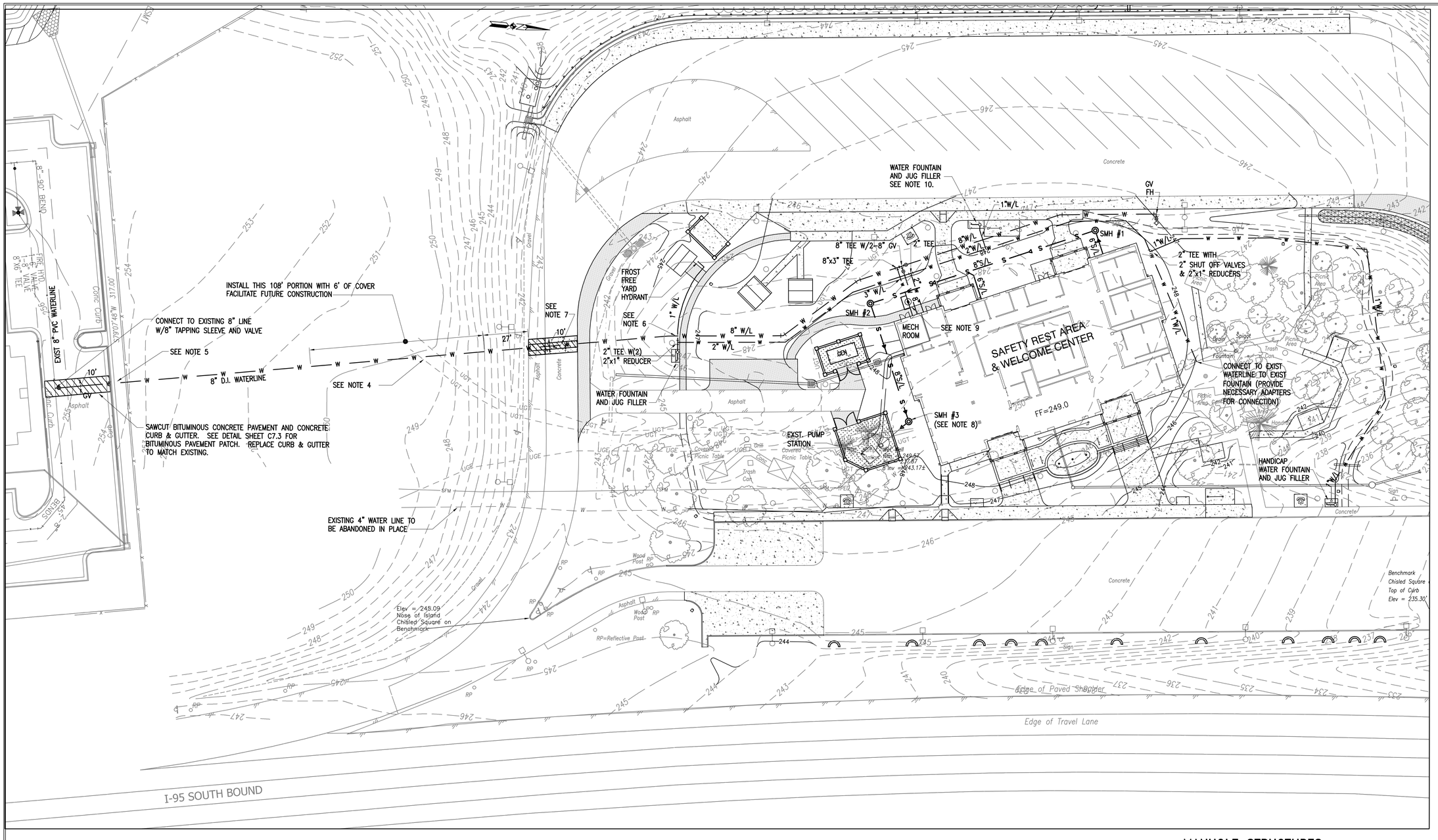

NOTES:

1. THE DOMESTIC WATERLINE SHALL HAVE A 3" RPZ BACKFLOW PREVENTER IN THE MECHANICAL ROOM. (SEE SHEET P1.1)
2. THE FIRE LINE SHALL HAVE A 6" DOUBLE CHECK ASSEMBLY IN THE MECHANICAL ROOM. (SEE SHEET P1.1)
3. SEE SITE ELECTRICAL DRAWINGS FOR INFORMATION ON CONDUIT AND WIRING FOR THE SITE LIGHTS, GENERATOR AND NEW TRANSFORMER.
4. LOCATE EXISTING TELEPHONE LINES PRIOR TO CONSTRUCTION. PROTECT LINES WHILE CROSSING UNDER THEM.
5. INSTALL WATERLINE WITH 18" VERTICAL SEPARATION FROM EXISTING STORM SEWER. BACKFILL WITH CRUSHED AGGREGATE FOR ENTIRE WIDTH AND DEPTH OF TRENCH FOR 6' BEYOND THE CURB & GUTTER.
6. INSTALL 8" LINE AT 5' COVER WHERE 1" LINE WILL CROSS.
7. SAWCUT AND REMOVE EXISTING CONCRETE AND BITUMINOUS PAVEMENT. SEE SHEET C7.1 FOR CONCRETE PAVEMENT PATCH DETAIL AND C7.3 FOR BITUMINOUS PAVEMENT PATCH DETAIL.
8. SMH #3 SHALL BE LOCATED TO ALLOW A STRAIGHT CONNECTION TO THE EXISTING 8" SANITARY SEWER COMING FROM THE EXISTING PUMP STATION WET WELL. THE NEW 8" SEWER OUT SHALL CONNECT TO THE EXISTING 8" LINE AT APPROXIMATE ELEVATION 243.67 (+/-) WITH AN ADAPTOR SUITABLE FOR THE TYPES OF PIPE BEING JOINED. VERIFY THE EXISTING INVERT PRIOR TO CONSTRUCTION AND MODIFY THE PROPOSED INVERTS AS REQUIRED.
9. 3" WATER METER VAULT. SEE DETAIL SHEET C7.3.
10. CONSTRUCT A 5 CU. FT. FRENCH DRAIN OF #57 STONE FOR DRAIN FOR OUTSIDE WATER FOUNTAIN ON TRUCK SIDE OF BUILDING.

MANHOLE STRUCTURES

STRUCTURE NO.	COORDINATES
SMH #1	N 6799878.60 E 11768243.02
SMH #2	N 6799744.66 E 11768302.65
SMH #3	N 6799775.96 E 11768372.96

NOTE: TOPS OF ALL MANHOLES TO BE SET 1" ABOVE FINAL GRADE

GRAPHIC SCALE:

1"=25' 0' 25' 50' 75'

AUSTIN BROCKENBROUGH & ASSOCIATES, L.L.P.
Consulting Engineers
P.O. Box 4800 Chester, Virginia 23831

COMMONWEALTH OF VIRGINIA
DAVID T. D. WARRINER
No. 018681
8-17-06
PROFESSIONAL ENGINEER

VIRGINIA DEPT. OF TRANSPORTATION
FREDERICKSBURG SAFETY REST AREA AND WELCOME CENTER
I-95 SOUTH, FREDERICKSBURG, VIRGINIA
PROJECT CODE: 501-06501-007

Rawlings Wilson & Associates
ARCHITECTS PLANNERS
1100 NORTH THOMPSON STREET
RICHMOND, VIRGINIA 23230
(804) 358-9141 FAX(804) 358-5715

SHEET TITLE: UTILITIES

DRAWN	RTH
CHECKED	GWA
RWA NO.	1890.01
DATE	8/17/06

DRAWING NO. C6.1
SHEET ___ OF ___

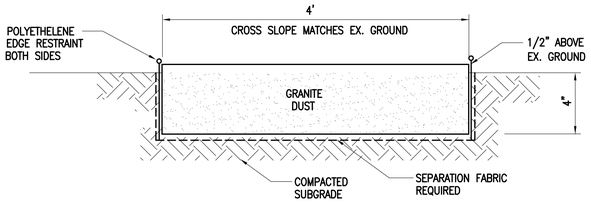

SECTION – STONE DUST PATH
NO SCALE

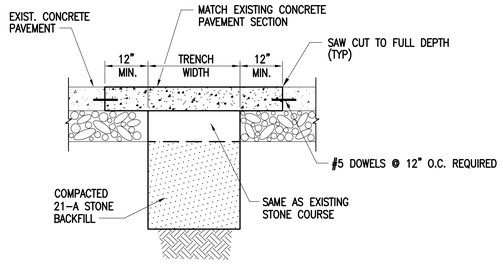

CONCRETE PAVEMENT PATCHING
NO SCALE

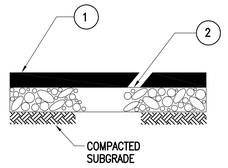

1. 3" ASPHALT CONCRETE SURFACE COURSE TYPE, SM-9.5A.
2. 8" AGGREGATE BASE MATERIAL TYPE 1, SIZE 21B.

PAVEMENT SECTION EMPLOYEE PARKING & PATH
NO SCALE

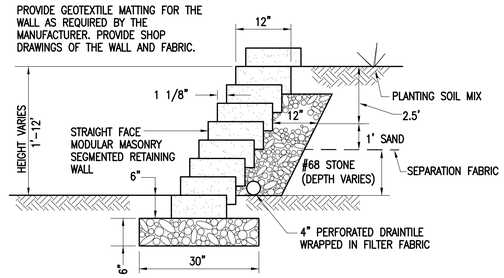

DETAIL – RETAINING WALL / BIO-FILTER AREA #1
NO SCALE

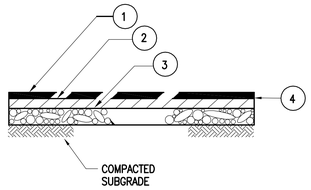

1. 1 1/2" ASPHALT CONCRETE SURFACE COURSE TYPE, SM-9.5E
2. 4" ASPHALT CONCRETE INTERMEDIATE COURSE TYPE, IM-19.0
3. 10" AGGREGATE BASE MATERIAL TYPE 1, SIZE 21A OR 21B.
4. TACK COAT.

PAVEMENT SECTION NEW TRUCK AREA ASPHALT (HEAVY ASPHALT)
NO SCALE

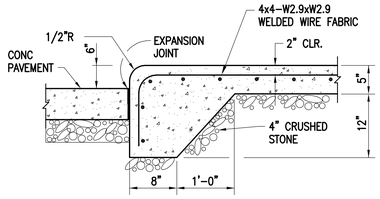

(TRUCK PARKING LOT)

DETAIL – MONOLITHIC CONCRETE CURB/WALK
NO SCALE

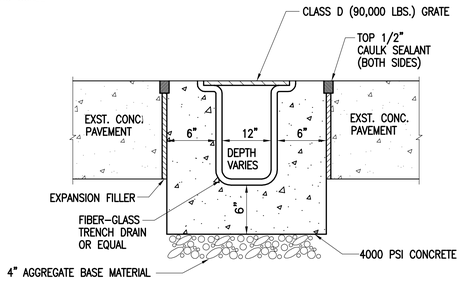

DETAIL – TRENCH DRAIN
NO SCALE

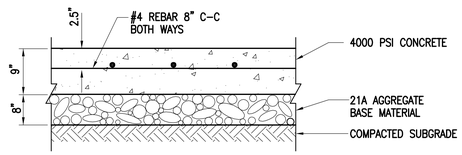

NOTE: USE FOR DUMPSTER PAD AND GENERATOR PAD.

SECTION – CONCRETE PAVEMENT
NO SCALE

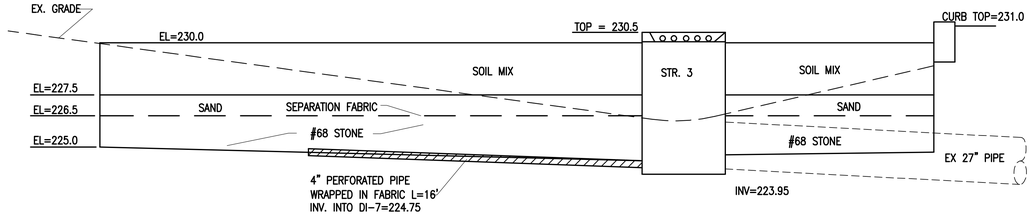

DETAIL – BIO-FILTER AREA #2
N.T.S.

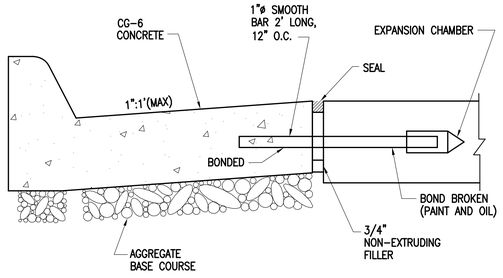

DETAIL – CONCRETE PVMNT. W/DOWEL AND (VDOT ST'D. CG-6)
NO SCALE

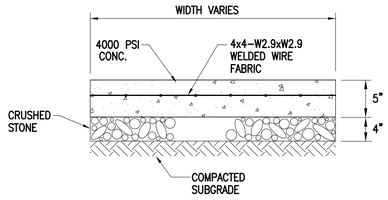

(ALSO USE FOR CONCRETE STOOPS, PICNIC AREAS & STRUCTURES, WATER FOUNTAINS, AND RECYCLE/SIGN/PHONE PADS)

SECTION – CONCRETE WALK
NO SCALE

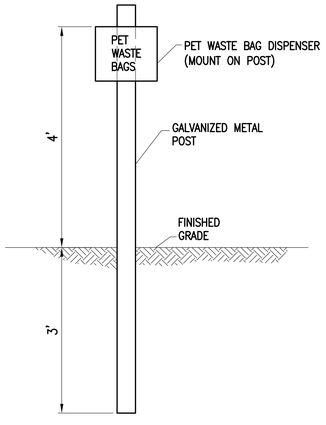

PET WASTE DISPENSER POST & BAGGIES
NO SCALE

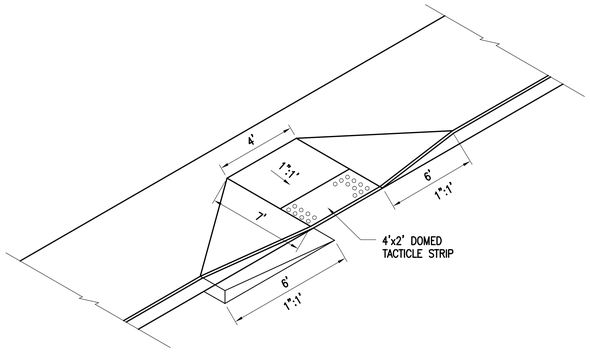

DETAIL – SIDEWALK HANDICAP RAMP
NO SCALE

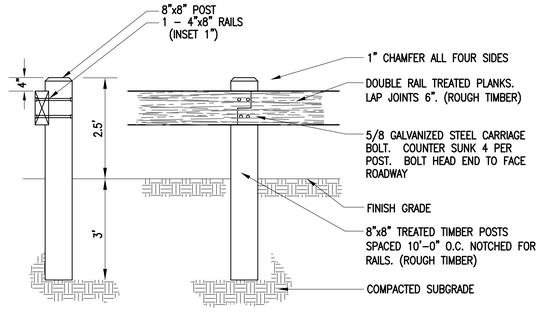

DETAIL – WOODEN GUARD RAIL
NO SCALE

AUSTIN BROCKENBROUGH & ASSOCIATES, L.L.P.
Consulting Engineers
P.O. Box 4800 Chester, Virginia 23831

COMMONWEALTH OF VIRGINIA
DAVID T. D. WARRINER
No. 018681
8-17-06
PROFESSIONAL ENGINEER

VIRGINIA DEPT. OF TRANSPORTATION
FREDERICKSBURG SAFETY REST AREA AND WELCOME CENTER
I-95 SOUTH, FREDERICKSBURG, VIRGINIA
PROJECT CODE: 501-06501-007

Rawlings Wilson & Associates
ARCHITECTS PLANNERS
1100 NORTH THOMPSON STREET
RICHMOND, VIRGINIA 23230
(804) 358-9141 FAX(804) 359-5715

SHEET TITLE: CIVIL DETAILS

DRAWN	RTH
CHECKED	GWA
RWA NO.	1890.01
DATE	8/17/06

DRAWING NO. C7.1
SHEET ___ OF ___

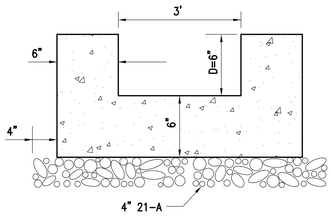

DETAIL – CURBCUT/PAVED FLUME
NO SCALE

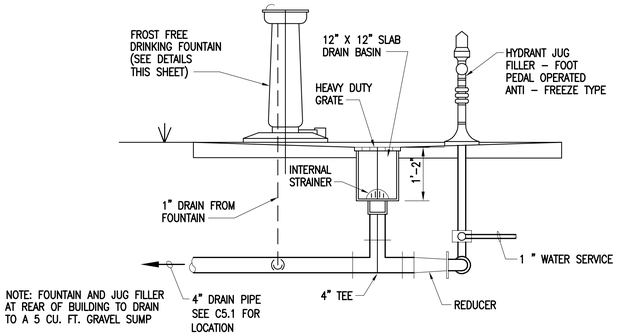

DRINKING FOUNTAIN AND HYDRANT JUG FILLER
SCALE: 3/4"=1'-0"

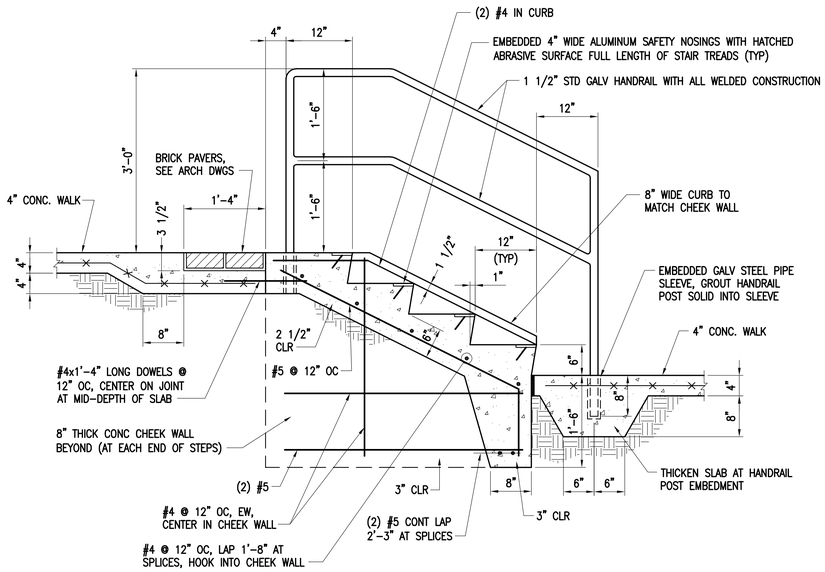

CONCRETE STEPS NO. 2
NO SCALE

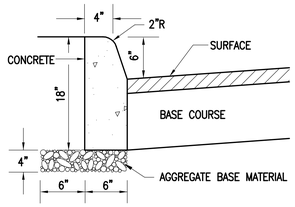

DETAIL – CURB (VDOT ST'D. CG-2)
NO SCALE

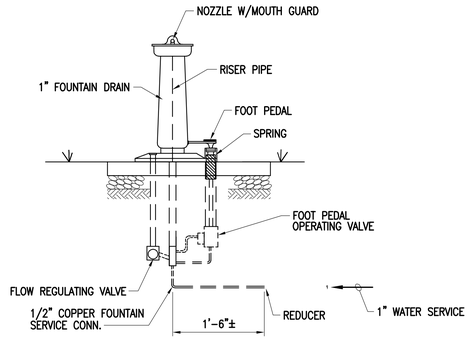

DRINKING FOUNTAIN
SCALE: 1"=1'-0"

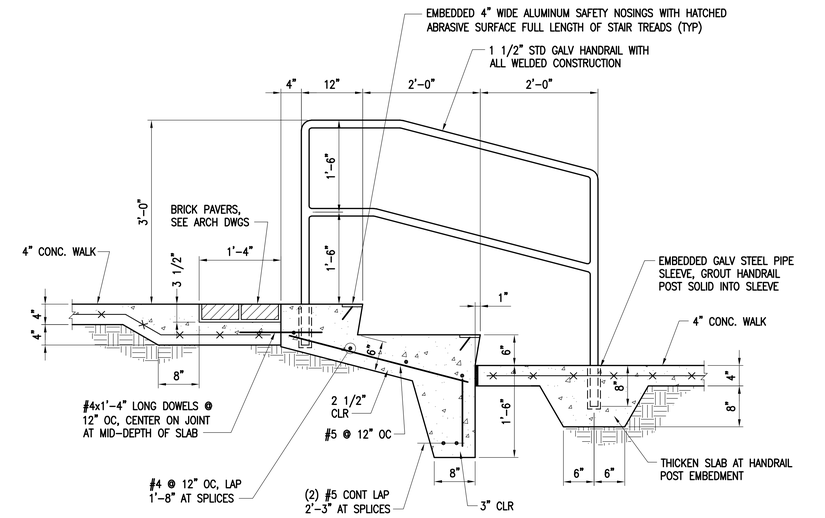

CONCRETE STEPS NO. 1
NO SCALE

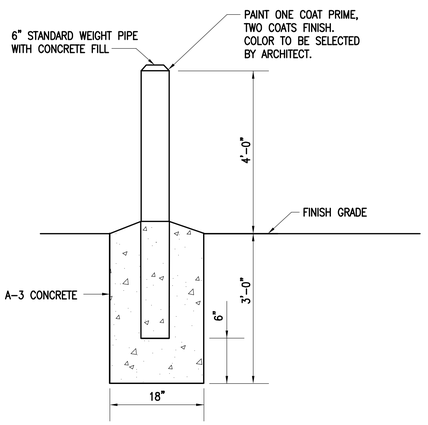

DETAIL – PIPE BOLLARD
NO SCALE

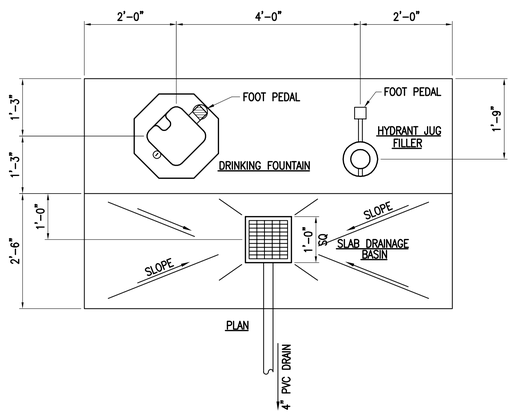

DRINKING FOUNTAIN AND HYDRANTJUG FILLER
SCALE: 3/4"=1'-0"

GRAPHIC SCALES:
3/4"=1'-0" 1' 0 1' 2' 3'
1"=1'-0" 1' 0' 1' 2'

AUSTIN BROCKENBROUGH & ASSOCIATES, L.L.P.
Consulting Engineers
P.O. Box 4800 Chester, Virginia 23831

COMMONWEALTH OF VIRGINIA
DAVID T. D. WARRINER
No. 018681
8.17.06
PROFESSIONAL ENGINEER

VIRGINIA DEPT. OF TRANSPORTATION
FREDERICKSBURG SAFETY REST AREA AND WELCOME CENTER
I-95 SOUTH, FREDERICKSBURG, VIRGINIA
PROJECT CODE: 501-06501-007

Rawlings Wilson & Associates
ARCHITECTS PLANNERS
1100 NORTH THOMPSON STREET
RICHMOND, VIRGINIA 23230
(804) 358-9141 FAX(804) 359-5715

SHEET	CIVIL
TITLE	DETAILS

DRAWN	RTH
CHECKED	GWA
RWA NO.	1890.01
DATE	8/17/06

DRAWING NO. C7.2
SHEET ___ OF ___

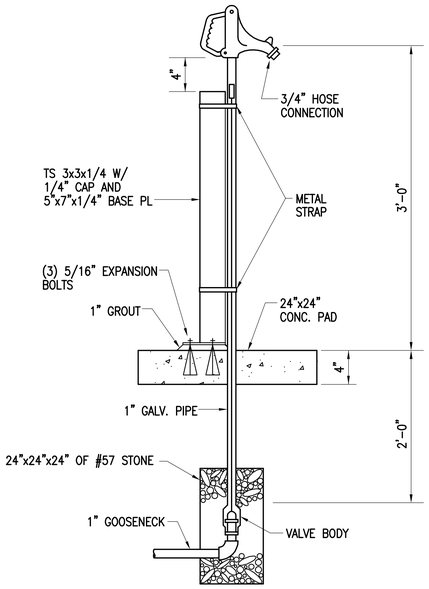

NON-FREEZE YARD HYDRANT

NO SCALE

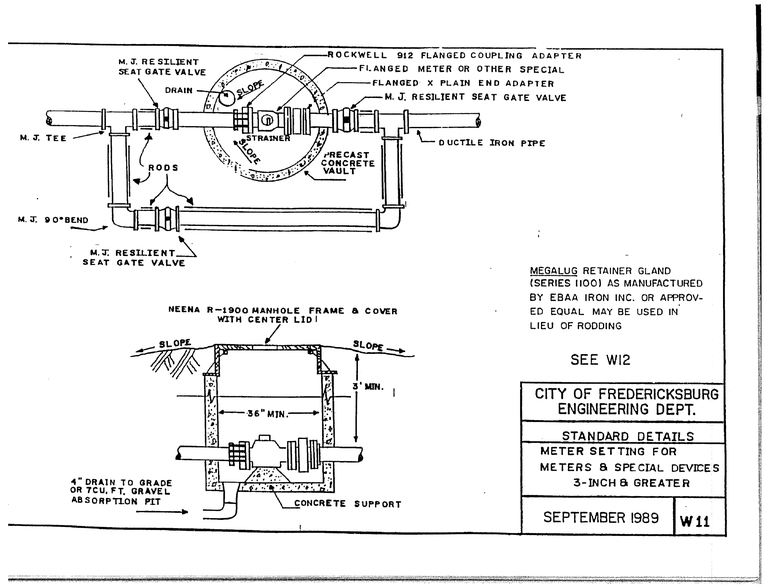

NOTES:

1. CITY OF FREDERICKSBURG WILL SUPPLY METER. CONTRACTOR TO INSTALL.

3" WATER METER VAULT

NO SCALE

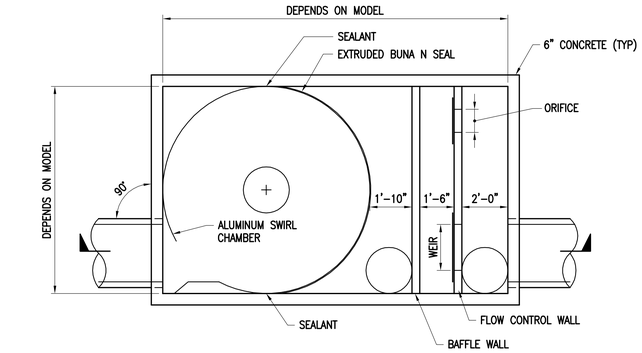

PLAN

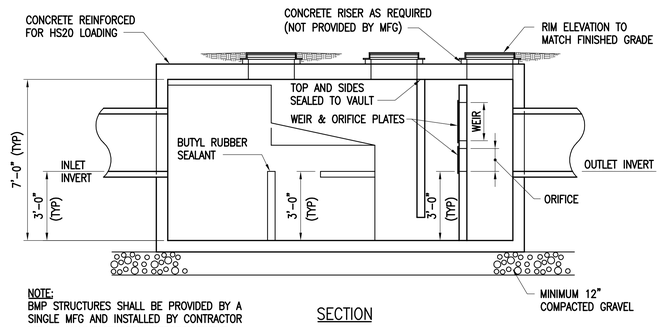

NOTE:
BMP STRUCTURES SHALL BE PROVIDED BY A SINGLE MFG AND INSTALLED BY CONTRACTOR WITH A MANUFACTURER'S REPRESENTATIVE ON-SITE DURING INSTALLATION. DIMENSIONED SHOP DRAWINGS ARE REQUIRED.

SECTION

BMP STRUCTURE

NO SCALE

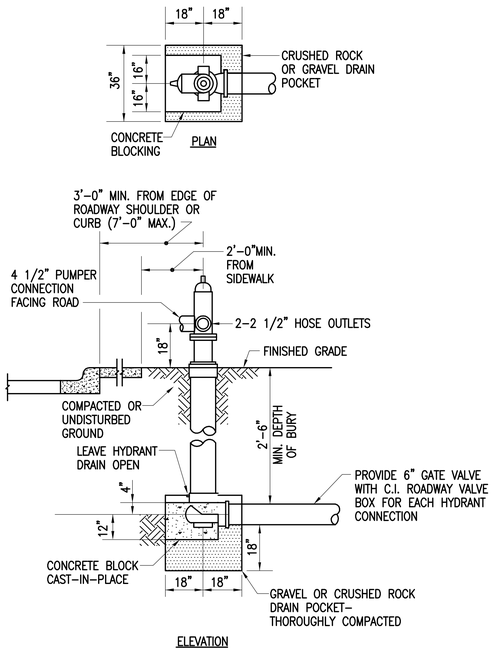

FIRE HYDRANT

NO SCALE

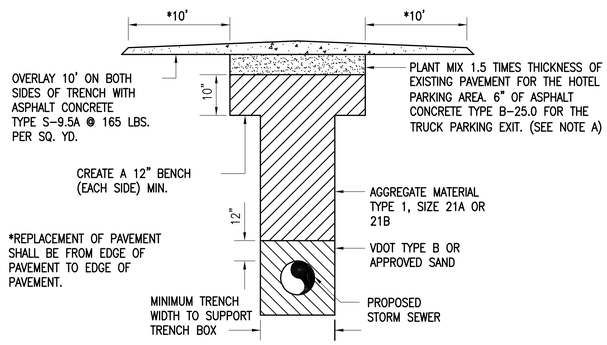

NOTES:

A. FOR PARALLEL WORK, A COPY OF DENSITY TEST RESULTS TAKEN EVERY 1-2 FEET OF FILL MUST BE FURNISHED BY THE CONTRACTOR TO VDOT. THE TEST RESULTS MUST VERIFY THAT TESTS WERE TAKEN AT A MINIMUM SPACING OF EVERY 100 FEET ALONG THE TRENCH. IF THESE RESULTS CAN NOT BE PROVIDED, VDOT WILL REQUIRE AN ALTERNATE PAVEMENT REPLACEMENT DETAIL.

DETAIL - OPEN CUT PAVEMENT REPAIR

NO SCALE

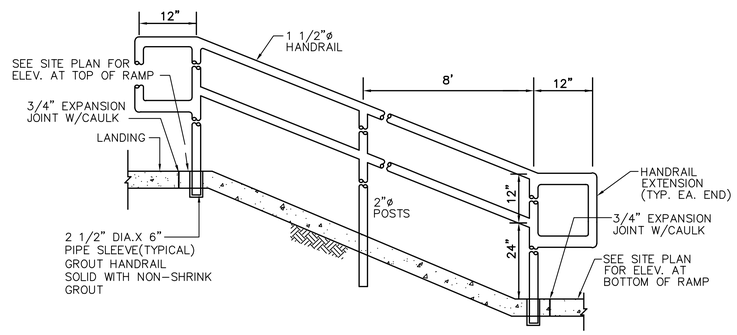

NOTE: CONCRETE SURFACE SHALL BE NON-SLIP FINISH

HANDICAP RAMP DETAIL

NO SCALE

AUSTIN BROCKENBROUGH & ASSOCIATES, L.L.P.
Consulting Engineers
P.O. Box 4800 Chester, Virginia 23831

COMMONWEALTH OF VIRGINIA
DAVID T. D. WARRINER
No. 018681
8/17/06
PROFESSIONAL ENGINEER

Rawlings Wilson & Associates
ARCHITECTS PLANNERS
1100 NORTH THOMPSON STREET
RICHMOND, VIRGINIA 23230
(804) 358-9141 FAX(804) 359-5715

VIRGINIA DEPT. OF TRANSPORTATION
FREDERICKSBURG SAFETY REST AREA AND WELCOME CENTER
I-95 SOUTH, FREDERICKSBURG, VIRGINIA
PROJECT CODE: 501-06501-007

SHEET TITLE: CIVIL DETAILS

DRAWN	RTH
CHECKED	GWA
RWA NO.	1890.01
DATE	8/17/06

DRAWING NO. C7.3
SHEET ___ OF ___

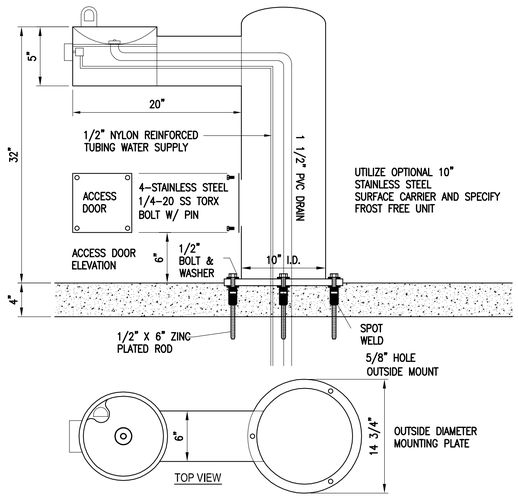

NOTES:
1. SPECIFY OPTIONAL STAINLESS STEEL SURFACE CARRIER.
2. CONNECT DRAIN LINE TO 4" DRAIN AT INLET ON ADJACENT CONCRETE PAD.

DETAIL – HANDICAP WATER FOUNTAIN

NO SCALE

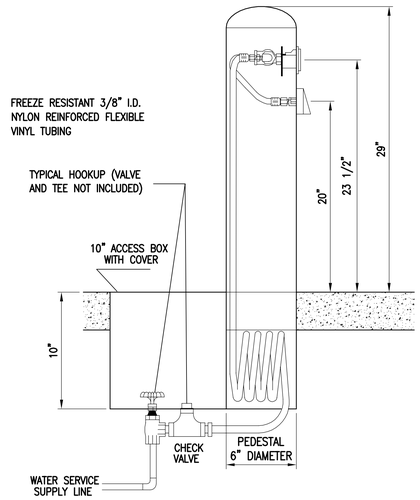

DETAIL – HANDICAP JUG FILLER

NO SCALE

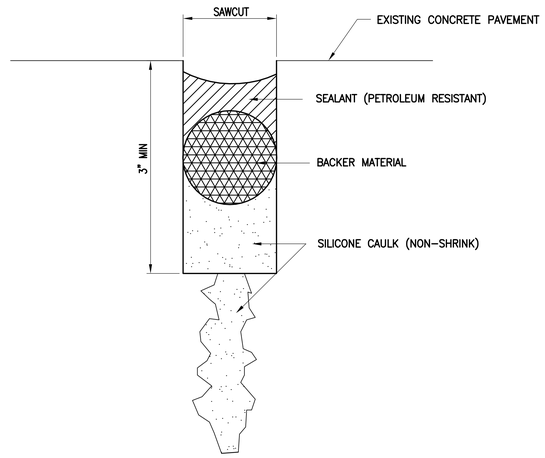

DETAIL – CONCRETE CRACK REPAIR

NO SCALE

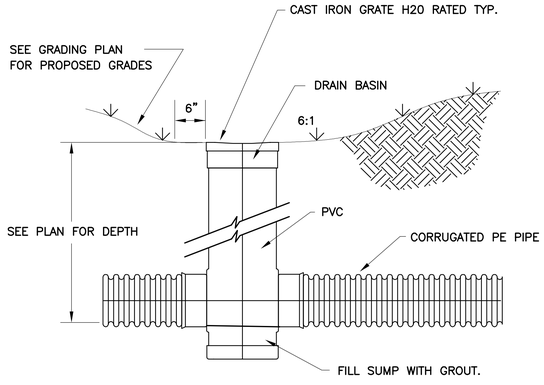

SECTION VIEW

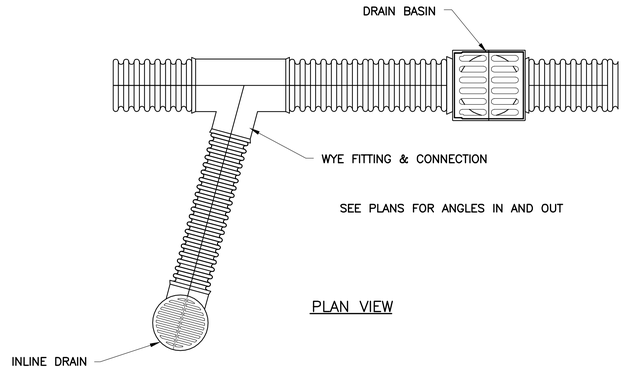

PLAN VIEW

DETAIL – DRAIN BASIN TYPICAL INSTALLATION

NO SCALE

AUSTIN BROCKENBROUGH & ASSOCIATES, L.L.P.
Consulting Engineers
P.O. Box 4800 Chester, Virginia 23831

COMMONWEALTH OF VIRGINIA
DAVID T. D. WARRINER
No. 018681
8/17/06
PROFESSIONAL ENGINEER

VIRGINIA DEPT. OF TRANSPORTATION
FREDERICKSBURG SAFETY REST AREA AND WELCOME CENTER
I-95 SOUTH, FREDERICKSBURG, VIRGINIA

PROJECT CODE: 501-06501-007

Rawlings Wilson & Associates
ARCHITECTS PLANNERS
1100 NORTH THOMPSON STREET
RICHMOND, VIRGINIA 23230
(804) 358-9141 FAX(804) 359-5715

SHEET TITLE: CIVIL DETAILS

DRAWN	RTH
CHECKED	GWA
RWA NO.	1890.01
DATE	8/17/06

DRAWING NO. C7.4

SHEET ___ OF ___

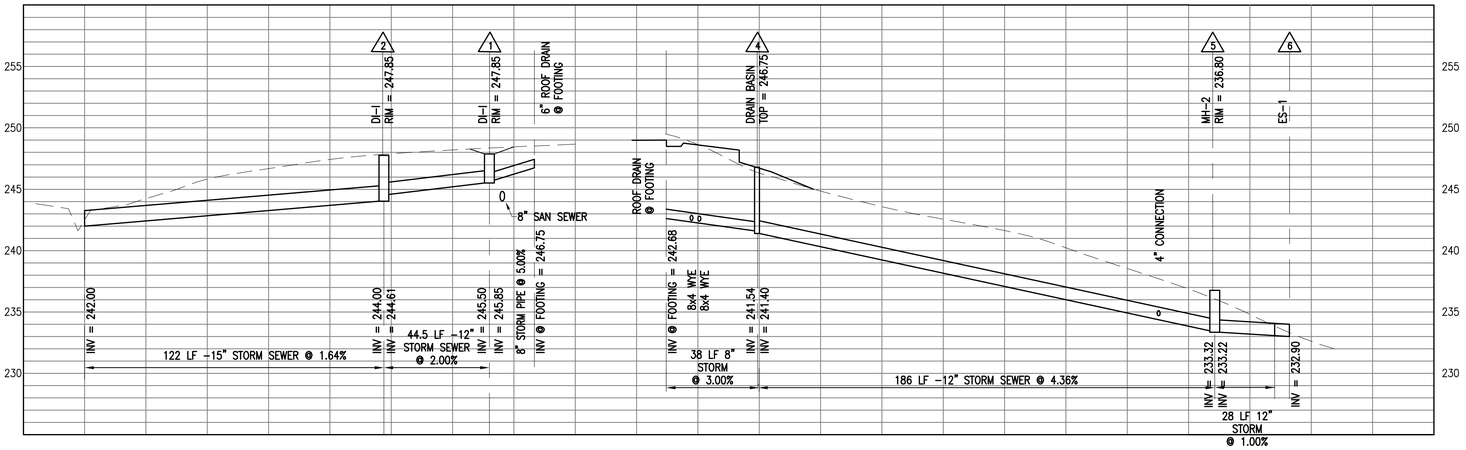

STORM SEWER – ROOF DRAIN OUTFALLS

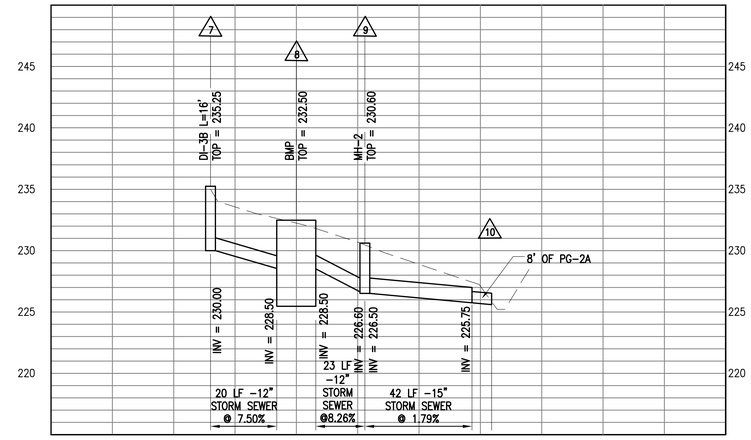

STORM SEWER PROFILE

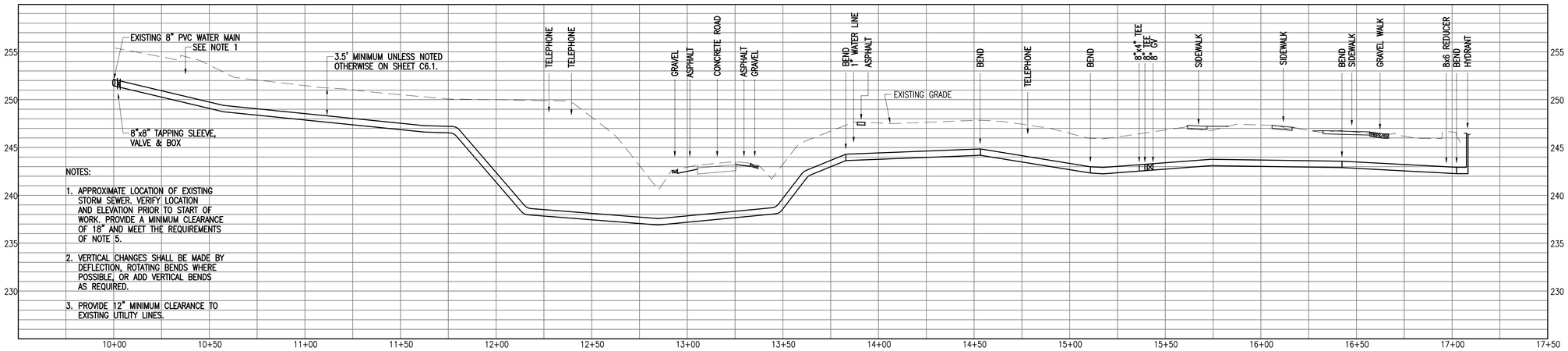

NOTES:

1. APPROXIMATE LOCATION OF EXISTING STORM SEWER. VERIFY LOCATION AND ELEVATION PRIOR TO START OF WORK. PROVIDE A MINIMUM CLEARANCE OF 18" AND MEET THE REQUIREMENTS OF NOTE 5.
2. VERTICAL CHANGES SHALL BE MADE BY DEFLECTION, ROTATING BENDS WHERE POSSIBLE, OR ADD VERTICAL BENDS AS REQUIRED.
3. PROVIDE 12" MINIMUM CLEARANCE TO EXISTING UTILITY LINES.

PROPOSED 8" WATER LINE

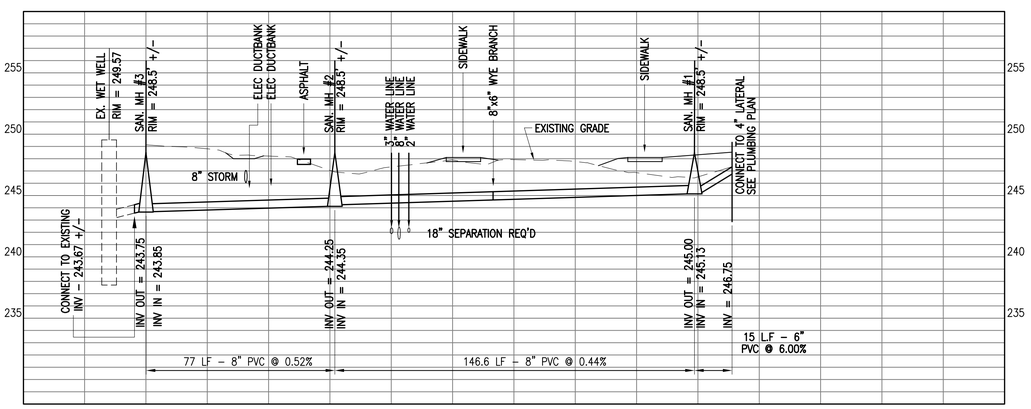

8" SANITARY SEWER LINE

GRAPHIC SCALES:

HORIZ 1"=25' 0' 25' 50' 75'

VERT 1"=5' 0' 5' 10' 20'

AUSTIN BROCKENBROUGH & ASSOCIATES, L.L.P.
Consulting Engineers
P.O. Box 4800 Chester, Virginia 23831

COMMONWEALTH OF VIRGINIA
DAVID T. D. WARRINER
No. 018681
8/17/06
PROFESSIONAL ENGINEER

VIRGINIA DEPT. OF TRANSPORTATION
FREDERICKSBURG SAFETY REST AREA AND WELCOME CENTER
I-95 SOUTH, FREDERICKSBURG, VIRGINIA

PROJECT CODE: 501-06501-007

Rawlings Wilson & Associates
ARCHITECTS PLANNERS
1100 NORTH THOMPSON STREET
RICHMOND, VIRGINIA 23230
(804) 358-9141 FAX(804) 359-5715

SHEET TITLE: UTILITY PROFILES

DRAWN	RTH
CHECKED	GWA
RWA NO.	1890.01
DATE	8/17/06

DRAWING NO. C8.1

SHEET ___ OF ___

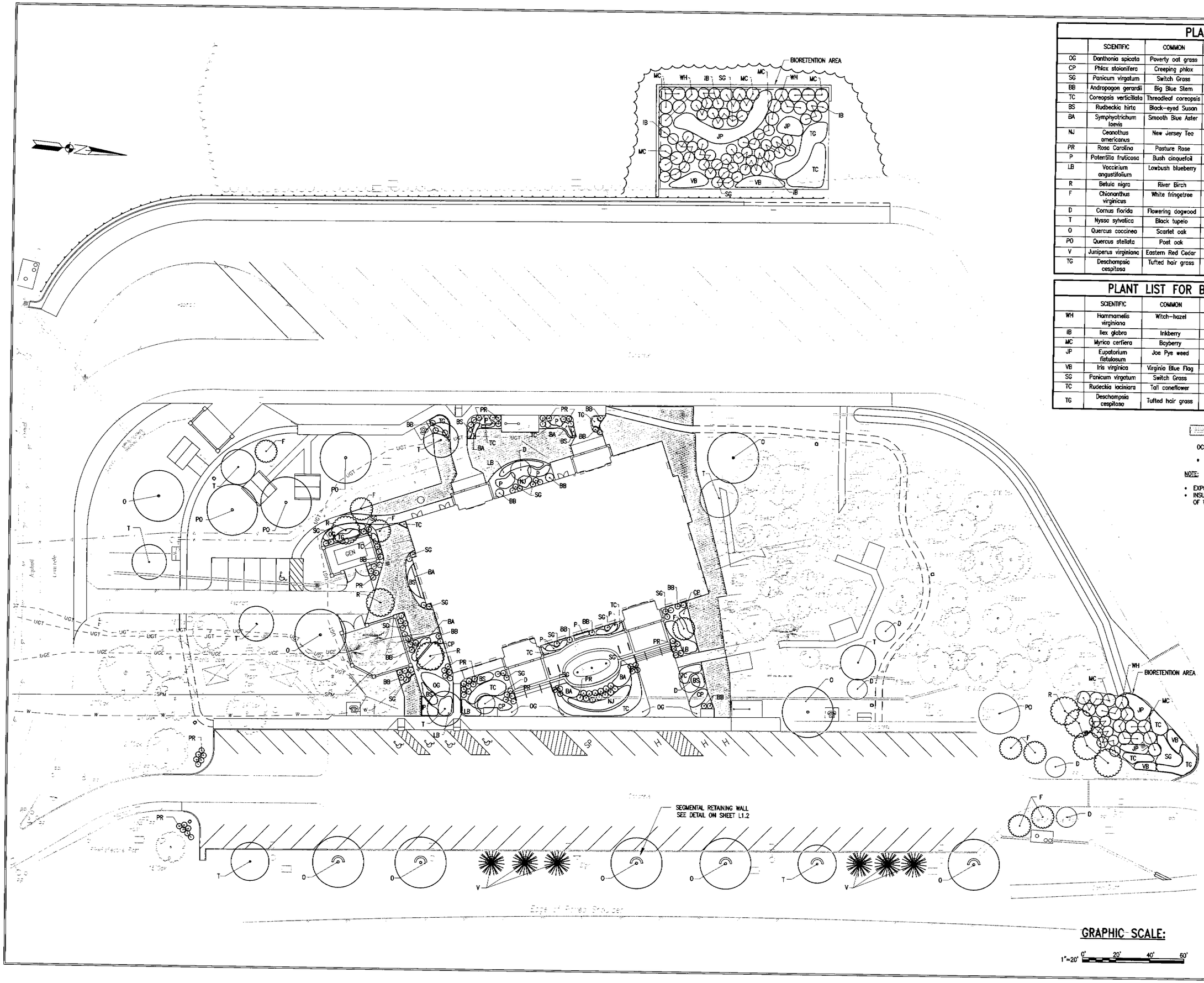

PLANT LIST

	SCIENTIFIC	COMMON	SIZE	QUANTITY	TYPE	NOTES
OG	Danthonia spicata	Poverty oat grass	1 qt.	95 *	container	12–18" O.C.
CP	Phlox stolonifera	Creeping phlox	1 qt.	640 *	container	9–12" O.C.
SG	Panicum virgatum	Switch Grass	2 qt.	36	container	
BB	Andropogon gerardii	Big Blue Stem	2 qt.	27	container	
TC	Coreopsis verticillata	Threadleaf coreopsis	1 qt.	269 *	container	18–24" O.C.
BS	Rudbeckia hirta	Black–eyed Susan	1 qt.	353 *	container	18–24" O.C.
BA	Symphyotrichum laevis	Smooth Blue Aster	2 qt.	42 *	container	18–24" O.C.
NJ	Ceanothus americanus	New Jersey Tea	1 gal.	48 *	B&B container	18–24" O.C.
PR	Rosa Carolina	Pasture Rose	1 gal.	65	B&B container	
P	Potentilla fruticosa	Bush cinquefoil	1 gal.	57 *	B&B container	
LB	Vaccinium angustifolium	Lowbush blueberry	1 qt.	197*	B&B	12–18" O.C.
R	Betula nigra	River Birch	6'–8'	7	B&B	Multi–stem
F	Chionanthus virginicus	White fringetree	6'–8'	8	B&B	
D	Cornus florida	Flowering dogwood	6'–8'	8	B&B	
T	Nyssa sylvatica	Black tupelo	2–2 1/2"	9	B&B	
O	Quercus coccinea	Scarlet oak	2–2 1/2"	9	B&B	
PO	Quercus stellata	Post oak	2–2 1/2"	4	B&B	
V	Juniperus virginiana	Eastern Red Cedar	6'–8'	6	B&B	
TG	Deschampsia cespitosa	Tufted hair grass	1 qt.	35*	container	20 in. O.C.

PLANT LIST FOR BIO–RETENTION AREAS

	SCIENTIFIC	COMMON	SIZE	QUANTITY	TYPE	NOTES
WH	Hammamelis virginiana	Witch–hazel	3'	15	B&B container	
IB	Ilex glabra	Inkberry	2'	40	B&B container	
MC	Myrica cerfiera	Bayberry	3'	26	B&B container	
JP	Eupatorium fistulosum	Joe Pye weed	2 qt.	168 *	container	3 ft. O.C.
VB	Iris virginica	Virginia Blue Flag	1 qt.	410 *	container	1 ft. O.C.
SG	Panicum virgatum	Switch Grass	2 qt.	45 *	container	3 ft. O.C.
TC	Rudeckia laciniara	Tall coneflower	1 qt.	108 *	container	2 ft. O.C.
TG	Deschampsia cespitosa	Tufted hair grass	1 qt.	249 *	container	20 in. O.C.

SOD AREA

OC ON CENTER PLANTING DISTANCES

* QUANTITIES ESTIMATED

NOTE:

- EXPOSED AND DAMAGED AREAS TO BE SEEDED.
- INSURE TALL GRASSES NOT PLANTED IN CENTER OF WINDOWS.

COMMONWEALTH OF VIRGINIA
LYNN M. CRUMP
Cert. No. 000956
8/17/06
LANDSCAPE ARCHITECT

VIRGINIA DEPT. OF TRANSPORTATION
FREDERICKSBURG SAFETY REST AREA AND WELCOME CENTER
I-95 SOUTH, FREDERICKSBURG, VIRGINIA
PROJECT CODE: 501-06501-007

Rawlings Wilson & Associates
ARCHITECTS PLANNERS
1100 NORTH THOMPSON STREET
RICHMOND, VIRGINIA 23230
(804) 358-9141 FAX(804) 358-5715

SHEET TITLE: LANDSCAPE PLAN

DRAWN	RTH
CHECKED	LMC
RWA NO.	1890.01
DATE	8/17/06

DRAWING NO. L1.1
SHEET ___ OF ___

LANDSCAPE NOTES

1. THE CONTRACTOR SHALL VERIFY PLANT MATERIAL QUANTITIES SHOWN ON PLAN WITH TOTALS IN PLANTING SCHEDULE. NOTIFY LANDSCAPE ARCHITECT OF ANY DISCREPANCIES PRIOR TO BIDDING.
2. PLANT MATERIAL NAMES SHALL COMPLY WITH "STANDARDIZED PLANT NAMES" AS ADOPTED BY THE LATEST EDITION OF THE AMERICAN JOINT COMMITTEE ON HORTICULTURAL NOMENCLATURE. SIZES AND GRADING SHALL COMPLY WITH THOSE SHOWN ON THE PLANS AS PER THE LATEST EDITION OF THE AMERICAN STANDARDS FOR NURSERY STOCK (ANSI Z60.1), PUBLISHED BY THE AMERICAN ASSOCIATION OF NURSERYMEN.
3. NO PLANTS MAY BE SUBSTITUTED AS TO NAME, QUALITY, SIZE, OR QUANTITY WITHOUT THE PRIOR APPROVAL OF THE LANDSCAPE ARCHITECT OR THE OWNER. PLANTINGS WILL BE INSPECTED FOR COMPLIANCE AGAINST THE APPROVED PLAN BY THE LANDSCAPE ARCHITECT.
4. PLANT MATERIAL SHALL BE DELIVERED TO THE SITE IN GOOD CONDITION AND SHALL BE HANDLED TO PREVENT INJURY OR DAMAGE. THE LANDSCAPE ARCHITECT RESERVES THE RIGHT TO ACCEPT OR REJECT ANY OR ALL MATERIAL DEEMED TO BE UNACCEPTABLE FOR ANY REASON. REJECTED MATERIAL SHALL BE REMOVED FROM THE SITE IMMEDIATELY. PLANTS SHALL BE DELIVERED TO THE SITE IN THE SAME CONDITION AS FOUND IN THE NURSERY. NO PRUNING SHALL BE PERFORMED UNLESS DIRECTED BY THE LANDSCAPE ARCHITECT AT THE SITE AFTER INSTALLATION.
5. PRIOR TO PLANTING, THE CONTRACTOR SHALL CONTACT "MISS UTILITY" AT 1-800- 552-7001 TO LOCATE AND MARK ALL UNDERGROUND UTILITIES TO AVOID DISRUPTION TO UTILITIES. THE CONTRACTOR SHALL BE RESPONSIBLE FOR ALL DAMAGES TO THE UTILITIES AND SITE CAUSED BY HIS WORK.
6. THE CONTRACTOR SHALL LAYOUT AND MARK THE LOCATION OF ALL PLANT MATERIAL SHOWN AND REQUEST IN-FIELD APPROVAL FROM THE LANDSCAPE ARCHITECT.
7. THE LANDSCAPE ARCHITECT SHALL BE NOTIFIED AT LEAST 7 DAYS PRIOR TO INSTALLATION.
8. PLANTING BACKFILL MIX SHALL BE COMPOSED OF 1 PART OF SANDY LOAM TOPSOIL AND 2 PARTS EXISTING SOIL BY VOLUME. FERTILIZER SHALL BE A SLOW RELEASE COMMERCIAL GRADE WITH AN ANALYSIS OF 3-1-2(NPK) AND APPLIED AT THE RATE PER MANUFACTURER'S INSTRUCTIONS AND MIXED WITH THE BACKFILL. (SEE SPECIFICATIONS FOR SOIL MIX IN BIORETENTION AREAS.)
9. PLANT MATERIALS SHALL HAVE ALL STRINGS OR ROPES AT THE BASE OF THE PLANT CUT AWAY FROM THE TRUNK (INCLUDING BIODEGRADABLE BRANDS OF ROPE).
10. MULCH SHALL BE SHREDDED HARDWOOD BARK. ALL PLANTING BEDS SHALL BE COVERED WITH A 2-3 INCH LAYER OF MULCH.
11. LANDSCAPE PLANTINGS AND SITE IMPROVEMENTS SHALL BE INSTALLED AND MAINTAINED AT ALL ENTRANCES AND EXITS TO THE SITE SO AS NOT TO INTERFERE WITH THE SIGHT DISTANCE NEEDS OF DRIVERS ENTERING AND EXITING IN THE PARKING AREA AND AT ENTRANCE/EXIT ACCESS LANE LOCATIONS.
12. THE OWNER IS RESPONSIBLE FOR MAINTAINING SHRUBS AND TREES THAT ARE REQUIRED PER THE LANDSCAPING PLANS. THE CONTRACTOR SHALL PROVIDE A 1 YEAR GUARANTEE THAT ALL PLANT MATERIAL IS IN HEALTHY GROWING CONDITION. ANY DEAD OR DISEASED MATERIAL SHALL BE REMOVED FROM THE SITE IMMEDIATELY AND BE REPLACED DURING THE NEXT PLANTING SEASON AT NO COST TO THE OWNER. PLANTS THAT DIE WITHIN 60 DAYS OF INSTALLATION SHALL BE REPLACED IMMEDIATELY.
13. BEFORE CALLING FOR FINAL INSPECTION AFTER ONE YEAR IN THE GROUND, REMOVE ALL STRINGS, TREE WRAPS, AND ROPES (INCLUDING BIODEGRADABLE TYPES) FROM MATERIAL TO ALLOW MATERIAL TO NATURALLY POSITION ITSELF AND TO INSURE THAT NO PLANTS ARE GIRDLED.

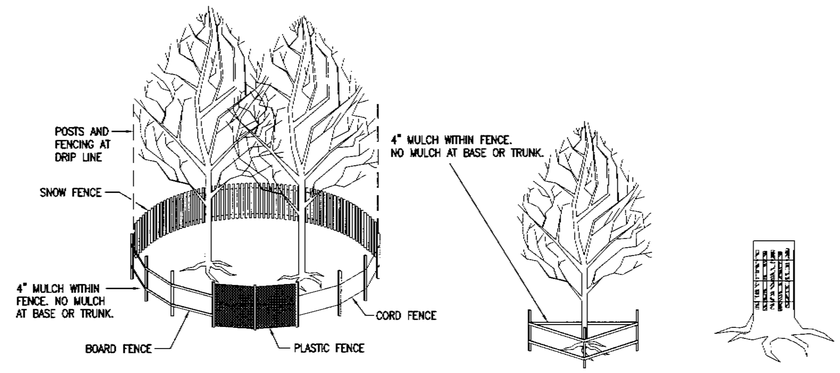

METHODS OF TREE FENCING

TRIANGULAR BOARD FENCE

TRUNK ARMORING

TREE PROTECTION
ST'D. & SPEC. 3.38
NO SCALE

NOTES:
1. SNOW FENCE SET ON STANDARD STEEL POSTS @ 6' O.C.
2. BOARD FENCE SHALL BE 4"x4" POSTS SET SECURELY ±10' O.C.
3. PLASTIC FENCING SHALL BE "INTERNATIONAL ORANGE" PLASTIC WEB FENCING SECURED TO CONVENTIONAL METAL "T" OR "U" POSTS DRIVEN TO A MINIMUM DEPTH OF 18" ON 6' MINIMUN CENTERS.

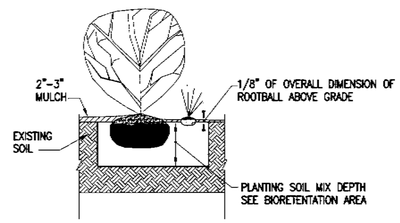

DETAIL - PLANTING FOR BIORETENTATION AREA
NO SCALE

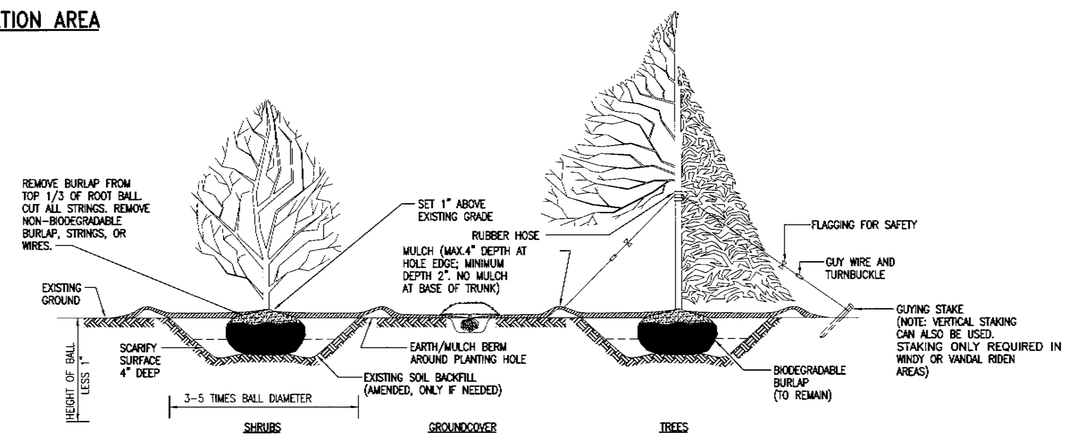

DETAIL - PLANTING
NO SCALE

NOTES:
1. INSTALLATION IS THE SAME FOR ALL PLANT MATERIAL, EXCEPT WHERE OTHERWISE NOTED. BACKFILL EXCAVATED AREA TO ONE-THIRD DEPTH AND FILL WITH WATER TO SETTLE SOIL. REPEAT UNTIL TWO-THIRDS DEPTH IS REACHED; THEN BACKFILL REMAINDER AND SATURATE.

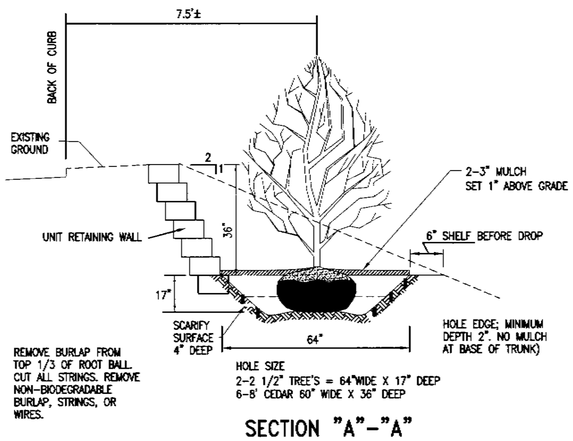

SECTION "A"-"A"
NO SCALE

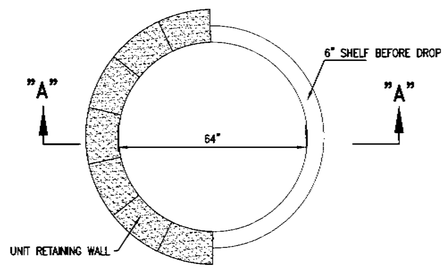

PLAN VIEW
NO SCALE

DETAIL - PLANTING
NO SCALE

AUSTIN BROCKENBROUGH & ASSOCIATES, L.L.P.
Consulting Engineers
P.O. Box 4800 Chester, Virginic 23831

COMMONWEALTH OF VIRGINIA
LYNN M. CRUMP
Cert. No. 000956
8/17/06
LANDSCAPE ARCHITECT

VIRGINIA DEPT. OF TRANSPORTATION
FREDERICKSBURG SAFETY REST AREA AND WELCOME CENTER
I-95 SOUTH, FREDERICKSBURG, VIRGINIA
PROJECT CODE: 501-06501-007

Rawlings Wilson & Associates
ARCHITECTS PLANNERS
1100 NORTH THOMPSON STREET
RICHMOND, VIRGINIA 23230
(804) 358-9141 FAX(804) 359-5715

SHEET TITLE: LANDSCAPE NOTES AND DETAILS

DRAWN: RTH
CHECKED: LMC
RWA NO.: 1890.01
DATE: 8/17/06

DRAWING NO. L1.2
SHEET __ OF __

FREDERICKSBURG EXPO
& CONFERENCE CENTER

HOMEWOOD
SUITES

ROAD "A"

PROP. 60' ACCESS ESMT

STORM WATER
MANAGEMENT
FACILITY

HILTON GARDEN INN

EXIST R/W

BIOFILTER

PERC-1

PERC-2

B-1 B-2 B-3 B-4 B-5 B-6

TRUCK PARKING

SAFETY REST AREA
& WELCOME CENTER

CAR PARKING

ENTRANCE RAMP

EXIT RAMP

I-95 SOUTH BOUND

Edge of Paved Shoulder

Edge of Travel Lane

BORE LEGEND

B-4 SOIL BORING

PERC-1 PERCOLATION TEST

NOTE:

INFORMATION ON ADJACENT PROPERTIES OBTAINED FROM OTHERS AND MAY NOT REFLECT ACTUAL CONDITIONS.

GRAPHIC SCALES:

1"=50' 50' 0' 50' 100'

AUSTIN BROCKENBROUGH
& ASSOCIATES, L.L.P.
Consulting Engineers
P.O. Box 4800 Chester, Virginia 23831

COMMONWEALTH OF VIRGINIA
DAVID T. D. WARRINER
No. 018681
8/17/06
PROFESSIONAL ENGINEER

VIRGINIA DEPT. OF TRANSPORTATION

FREDERICKSBURG SAFETY REST AREA AND WELCOME CENTER

I-95 SOUTH, FREDERICKSBURG, VIRGINIA

PROJECT CODE: 501-06501-007

Rawlings Wilson & Associates
ARCHITECTS PLANNERS
1100 NORTH THOMPSON STREET
RICHMOND, VIRGINIA 23230
(804) 359-9141 FAX(804) 359-5715

SHEET TITLE: BORE PLAN

DRAWN	RTH
CHECKED	GWA
RWA NO.	1890.01
DATE	8/17/06

DRAWING NO. B0.1

SHEET ___ OF ___

BORING LOG

FROEHLING & ROBERTSON, INC.
GEOTECHNICAL • ENVIRONMENTAL • MATERIALS
ENGINEERS • LABORATORIES
"OVER ONE HUNDRED YEARS OF SERVICE"
SINCE 1881

Report No.: H60-0142G Date: June 2006
Client: Rawlings Wilson & Associates
Project: VDOT I-95 Welcome Center/Rest Area,
Boring No.: B-1 (1 of 1) Total Depth 25.0' Elev: Location: See Boring Location Plan
Type of Boring: Hollow Stem Auger Started: 5/25/06 Completed: 5/25/06 Driller: England

Depth	Description of Materials (Classification)
0.3	Driller Reported "Surficial Organic Soils"
2.0	ALLUVIUM: Stiff, Brown Sandy Lean CLAY - Moist (CL)
4.0	Dense, Yellowish-Brown Clayey Fine to Coarse SAND - Moist (SC)
8.0	Very Stiff to Firm, Yellowish-Brown Elastic SILT, Some Sand - Moist (MH)
12.0	Firm, Light Gray and Reddish-Brown Lean CLAY, Trace Sand - Moist (CL)
17.0	RESIDUUM: Loose, Yellowish-Brown and Gray Silty Fine to Medium SAND, Micaceous - Moist (SM)
25.0	Loose to Medium Dense, Light Gray and White Silty Fine to Coarse SAND - Moist (SM) (Relict Rock Structure)
	Boring terminated at 25.0'

* Sample Blows	Sample Depth (feet)	N Value (blows/ft)
3-6-7-11	0.0-2.0	13
11-22-24-16	2.0-4.0	46
7-9-9-8	4.0-6.0	18
4-4-4-4	6.0-8.0	8
1-2-3-4	8.0-10.0	5
6-4-5	13.5-15.0	9
2-2-5	18.5-20.0	7
5-10-10	23.5-25.0	20

REMARKS: Groundwater was encountered at 13' during drilling. Groundwater was observed at 21' upon removal of auger. Cave-in depth at 24'.

BORING_LOG H60-0142.GPJ F&R.GDT 7/7/06

*Number of blows required for a 140 lb hammer dropping 30" to drive 2" O.D., 1.375" I.D. sampler a total of 18 inches in three 6" increments. The sum of the second and third increments of penetration is termed the standard penetration resistance, N.

BORING LOG

FROEHLING & ROBERTSON, INC.
GEOTECHNICAL • ENVIRONMENTAL • MATERIALS
ENGINEERS • LABORATORIES
"OVER ONE HUNDRED YEARS OF SERVICE"
SINCE 1881

Report No.: H60-0142G Date: June 2006
Client: Rawlings Wilson & Associates
Project: VDOT I-95 Welcome Center/Rest Area,
Boring No.: B-3 (1 of 1) Total Depth 10.0' Elev: Location: See Boring Location Plan
Type of Boring: Hollow Stem Auger Started: 5/25/06 Completed: 5/25/06 Driller: England

Depth	Description of Materials (Classification)
2.0	ALLUVIUM: Loose, Yellowish-Brown Clayey Fine to Coarse SAND - Moist (SC)
4.0	Firm, Light Gray Sandy Lean CLAY - Moist (CL)
6.0	Very Soft, Brownish-Red Sandy Lean CLAY, Trace Fine Gravel, Micaceous - Moist (CL)
8.0	Very Stiff, Brown Sandy Lean CLAY, Little Fine Gravel - Moist (CL)
10.0	Medium Dense, Light Brown Clayey Fine to Coarse SAND with Fine to Coarse Gravel - Moist (SC-GC)
	Boring terminated at 10.0'

* Sample Blows	Sample Depth (feet)	N Value (blows/ft)
4-3-3-3	0.0-2.0	6
2-4-4-4	2.0-4.0	8
1-1-1-3	4.0-6.0	2
5-14-17-21	6.0-8.0	31
3-18-12-5	8.0-10.0	30

REMARKS: Groundwater was not encountered during drilling or observed upon removal of auger. Cave-in depth at 6'.

BORING_LOG H60-0142.GPJ F&R.GDT 7/7/06

*Number of blows required for a 140 lb hammer dropping 30" to drive 2" O.D., 1.375" I.D. sampler a total of 18 inches in three 6" increments. The sum of the second and third increments of penetration is termed the standard penetration resistance, N.

BORING LOG

FROEHLING & ROBERTSON, INC.
GEOTECHNICAL • ENVIRONMENTAL • MATERIALS
ENGINEERS • LABORATORIES
"OVER ONE HUNDRED YEARS OF SERVICE"
SINCE 1881

Report No.: H60-0142G Date: June 2006
Client: Rawlings Wilson & Associates
Project: VDOT I-95 Welcome Center/Rest Area,
Boring No.: B-5 (1 of 1) Total Depth 10.0' Elev: Location: See Boring Location Plan
Type of Boring: Hollow Stem Auger Started: 5/25/06 Completed: 5/25/06 Driller: England

Depth	Description of Materials (Classification)
2.0	POSSIBLE FILL: Very Stiff, Brown Sandy Lean CLAY - Moist (CL)
10.0	Medium Dense, Light Gray to Brownish-Yellow Clayey Fine to Coarse SAND - Moist (SC)
	Boring terminated at 10.0'

* Sample Blows	Sample Depth (feet)	N Value (blows/ft)
4-10-7-8	0.0-2.0	17
6-9-12-14	2.0-4.0	21
7-10-12-14	4.0-6.0	22
4-6-6-7	6.0-8.0	12
4-6-6-8	8.0-10.0	12

REMARKS: Groundwater data not reported

BORING_LOG H60-0142.GPJ F&R.GDT 7/7/06

*Number of blows required for a 140 lb hammer dropping 30" to drive 2" O.D., 1.375" I.D. sampler a total of 18 inches in three 6" increments. The sum of the second and third increments of penetration is termed the standard penetration resistance, N.

BORING LOG

FROEHLING & ROBERTSON, INC.
GEOTECHNICAL • ENVIRONMENTAL • MATERIALS
ENGINEERS • LABORATORIES
"OVER ONE HUNDRED YEARS OF SERVICE"
SINCE 1881

Report No.: H60-0142G Date: June 2006
Client: Rawlings Wilson & Associates
Project: VDOT I-95 Welcome Center/Rest Area,
Boring No.: B-2 (1 of 1) Total Depth 25.0' Elev: Location: See Boring Location Plan
Type of Boring: Hollow Stem Auger Started: 5/25/06 Completed: 5/25/06 Driller: England

Depth	Description of Materials (Classification)
0.3	Driller Reported "Surficial Organic Soils"
6.0	ALLUVIUM: Stiff to Hard, Brown Sandy Lean CLAY - Dry (CL)
17.0	Medium Dense, Yellow, Brown and Yellowish-Brown Clayey Fine to Medium SAND - Damp (SC)
22.0	RESIDUUM: Medium Dense, Brown and Brownish-Yellow Silty Fine to Medium SAND, Micaceous - Moist (SM)
25.0	Medium Dense, Light Gray and White Silty Fine to Coarse SAND - Moist (SM) (Relict Rock Structure)
	Boring terminated at 25.0'

* Sample Blows	Sample Depth (feet)	N Value (blows/ft)
4-6-8-11	0.0-2.0	14
11-23-17-20	2.0-4.0	40
8-12-17-20	4.0-6.0	29
6-12-14-16	6.0-8.0	26
3-6-6-10	8.0-10.0	12
2-5-6	13.5-15.0	11
4-6-10	18.5-20.0	16
7-9-9	23.5-25.0	18

REMARKS: Groundwater was not encountered during drilling or observed upon removal of auger. Cave-in depth at 22.2'.

BORING_LOG H60-0142.GPJ F&R.GDT 7/7/06

*Number of blows required for a 140 lb hammer dropping 30" to drive 2" O.D., 1.375" I.D. sampler a total of 18 inches in three 6" increments. The sum of the second and third increments of penetration is termed the standard penetration resistance, N.

BORING LOG

FROEHLING & ROBERTSON, INC.
GEOTECHNICAL • ENVIRONMENTAL • MATERIALS
ENGINEERS • LABORATORIES
"OVER ONE HUNDRED YEARS OF SERVICE"
SINCE 1881

Report No.: H60-0142G Date: June 2006
Client: Rawlings Wilson & Associates
Project: VDOT I-95 Welcome Center/Rest Area,
Boring No.: B-4 (1 of 1) Total Depth 10.0' Elev: Location: See Boring Location Plan
Type of Boring: Hollow Stem Auger Started: 5/25/06 Completed: 5/25/06 Driller: England

Depth	Description of Materials (Classification)
0.3	Driller Reported "Surficial Wooded Soils"
2.0	ALLUVIUM: Loose, Brown Clayey Fine to Coarse SAND - Damp (SC)
4.0	Medium Dense, Reddish-Brown Silty Fine to Coarse SAND, Micaceous - Damp (SM)
10.0	Medium Dense, Brownish-Yellow to Light Brown Silty Fine to Coarse SAND - Damp (SM)
	Boring terminated at 10.0'

* Sample Blows	Sample Depth (feet)	N Value (blows/ft)
3-3-4-4	0.0-2.0	7
4-11-17-19	2.0-4.0	28
7-12-9-9	4.0-6.0	21
5-8-11-14	6.0-8.0	19
5-9-10-11	8.0-10.0	19

REMARKS: Groundwater data not reported

BORING_LOG H60-0142.GPJ F&R.GDT 7/7/06

*Number of blows required for a 140 lb hammer dropping 30" to drive 2" O.D., 1.375" I.D. sampler a total of 18 inches in three 6" increments. The sum of the second and third increments of penetration is termed the standard penetration resistance, N.

BORING LOG

FROEHLING & ROBERTSON, INC.
GEOTECHNICAL • ENVIRONMENTAL • MATERIALS
ENGINEERS • LABORATORIES
"OVER ONE HUNDRED YEARS OF SERVICE"
SINCE 1881

Report No.: H60-0142G Date: June 2006
Client: Rawlings Wilson & Associates
Project: VDOT I-95 Welcome Center/Rest Area,
Boring No.: B-6 (1 of 1) Total Depth 10.0' Elev: Location: See Boring Location Plan
Type of Boring: Hollow Stem Auger Started: 5/25/06 Completed: 5/25/06 Driller: England

Depth	Description of Materials (Classification)
0.3	Driller Reported "Surficial Wooded Soils"
10.0	RESIDUUM: Very Stiff to Hard, Yellowish-Red Sandy Elastic SILT, Micaceous - Damp to Moist (MH)
	Boring terminated at 10.0'

* Sample Blows	Sample Depth (feet)	N Value (blows/ft)
7-11-14-12	0.0-2.0	25
9-18-18-14	2.0-4.0	36
7-9-12-15	4.0-6.0	21
7-11-14-12	6.0-8.0	25
6-12-14-16	8.0-10.0	26

REMARKS: Groundwater was not encountered during drilling or observed upon removal of auger. Cave-in depth at 8'.

BORING_LOG H60-0142.GPJ F&R.GDT 7/7/06

*Number of blows required for a 140 lb hammer dropping 30" to drive 2" O.D., 1.375" I.D. sampler a total of 18 inches in three 6" increments. The sum of the second and third increments of penetration is termed the standard penetration resistance, N.

AUSTIN BROCKENBROUGH & ASSOCIATES, L.L.P.
Consulting Engineers
P.O. Box 4800 Chester, Virginia 23831

COMMONWEALTH OF VIRGINIA
DAVID T. D. WARRINER
No. 018681
8.17.06
PROFESSIONAL ENGINEER

VIRGINIA DEPT. OF TRANSPORTATION
FREDERICKSBURG SAFETY REST AREA AND WELCOME CENTER
I-95 SOUTH, FREDERICKSBURG, VIRGINIA
PROJECT CODE: 501-06501-007

Rawlings Wilson & Associates
ARCHITECTS PLANNERS
1100 NORTH THOMPSON STREET
RICHMOND, VIRGINIA 23230
(804) 358-9141 FAX(804) 359-5715

SHEET TITLE: BORING LOGS

DRAWN: RTH
CHECKED: GWA
RWA NO.: 1890.01
DATE: 8/17/06

DRAWING NO. B1.1
SHEET ___ OF___

Virginia Department of Transportation
Fredericksburg District, Materials Section

Soil Survey Record

This subsurface information shown in the Soil Survey Record was obtained with reasonable care and recorded in good faith solely for use by the Department in establishing controls for the project. The Department has no reason to suspect that the information is not reasonably accurate as an approximate indication of the subsurface conditions at the sites where the borings were taken. The Department does not in any way warrant or guarantee that such data can be projected as indicative of conditions beyond the limits of the borings shown, and any such projections are purely interpretive and all together speculative.

Note: Topsoil, Pavement and Subbase Aggregate are measured in inches

Project : I-95 Welcome Center
Logger : Alex Owsiak
Date : 1/30/06 - 2/2/06
Route : I-95 SB
From: MM 132
To:
County : City of Fredericksburg

STATION OR HOLE #	FIELD DESCRIPTION OF STRATA	Depth	Soil Sample #	FIELD MOISTURE DETERMINATION FROM	TO	DEPTH TAKEN	SPT COUNT	DSH #	FIELD MOISTURE	LABORATORY DATA C.M.	M.D. lbs/ft³	L.L.	P.I.	% #200	AASHTO	REMARKS
1	CLAY w/Fine Sand, contains Mica, Reddish-brown, Soft, Moist	2.3 - 8.0	14			5.0 - 6.5	3-3-5	49	24.5							10" Concrete pavement underlain by 6" of aggregate base
	ditto, with FMC Sand	8.0 - 16.5	15			10.0 - 11.5	2-3-5	50	26.6							Highly micaceous between 4 ft and 10 ft
			16			15.0 - 16.5	2-2-3	51	40.1							
2	FMC Gravely SAND w/Clay, Brown, Moist	0.8 - 1.3	10			0.8 - 2.3	4-3-3	10	19.2							10" Concrete pavement underlain by 6" of aggregate base
	FMC Clayey SAND, tr. Gravel, Reddish-brown, Soft, Moist	1.3 - 8.0	11			5.0 - 6.5	3-4-5	11	24.8							
	ditto, contains Mica between 8 ft and 10 ft	8.0 - 10.0	12			10.0 - 11.5	2-4-5	12	15.2							
	Sandy CLAY, contains Mica and Organics, Gray, Firm, Moist	10.0 - 13.0														
	Sandy CLAY, Reddish-brown, Firm, Moist	13.0 - 16.5	13			15.0 - 16.5	3-5-7	13	20.4							
3	Topsoil	0.0 - 1.0	1			0.0 - 1.5	2-2-2	1	20.7							
	FMC Clayey SAND, Brown to Reddish-brown, Soft, Moist	1.0 - 3.0														
	Sandy CLAY, contains Mica, Reddish-brown, Firm, Moist	3.0 - 13.0	2			5.0 - 6.5	5-6-8	2	17.1							
			3			10.0 - 11.5	4-6-8	3	23.9							
	FMC Clayey SAND, contains Mica, Reddish-bBrown, Soft, Moist	13.0 - 16.0	4			15.0 - 16.5	4-7-9	4	21.4							
	FMC Silty SAND, White, Soft, Moist	16.0 - 21.5	5			20.0 - 21.5	4-3-5	5	23.8							
4	Topsoil	0.0 - 0.5	55			0.0 - 1.5	2-3-3	55	21.9							
	Sandy CLAY, Reddish-brown, Firm, Moist	0.5 - 3.0														
	FMC Clayey SAND, Reddish-brown, Soft, Dry	3.0 - 8.0	56			5.0 - 6.5	4-8-8	56	12.5							
	CLAY w/Fine Sand, Reddish-brown, Soft, Moist	8.0 - 14.0	57			10.0 - 11.5	1-2-2	57	39.8							
	ditto, Wet	14.0 - 18.0	58			15.0 - 16.5	P-P-1	58	53.4							Groundwater encountered @ 18 ft
	F-M SAND w/Silt, tr. Gravel, contains Mica, Tan, Loose, Wet	18.0 - 21.5	59			20.0 - 21.5	3-11-17	59	47.5							
5	Topsoil	0.0 - 1.0	60			0.0 - 1.5	5-3-1	60	17.7							
	Sandy CLAY, Reddish-brown, Soft, Moist	1.0 - 8.0	61			5.0 - 6.5	2-4-4	61	23.3							
	ditto, contains Mica	8.0 - 14.0	62			10.0 - 11.5	2-4-5	62	23.0							Highly micaceous between 10 ft and 21.5 ft
	Sandy SILT, contains Mica, Brown-White, Soft, Moist	14.0 - 21.5	63			15.0 - 16.5	2-4-5	63	24.7							
			64			20.0 - 21.5	3-4-5	64	19.9							

STATION OR HOLE #	FIELD DESCRIPTION OF STRATA	Depth	Soil Sample #	FIELD MOISTURE DETERMINATION FROM	TO	DEPTH TAKEN	SPT COUNT	DSH #	FIELD MOISTURE	LABORATORY DATA C.M.	M.D. lbs/ft³	L.L.	P.I.	% #200	AASHTO	REMARKS
6	Topsoil	0.0 - 0.8	49			0.0 - 1.5	2-4-2	49	24.3							
	Sandy CLAY, Reddish-brown, Firm, Moist	0.8 - 3.0														
	FMC Clayey SAND, Reddish-brown, Soft, Moist	3.0 - 6.0	50			5.0 - 6.5	3-4-4	50	28.4							
	CLAY w/Fine Sand, contains Mica, Tan, Soft, Moist	6.0 - 8.0	51			10.0 - 11.5	P-P-P	51	38.1							Groundwater encountered @ 10 ft
	ditto, wet below 8 ft	8.0 - 13.0														
	F-M Clayey SAND, Tan, Soft, Wet	13.0 - 18.0	52			15.0 - 16.5	3-4-2	52	31.6							
	F-M SAND w/Silt, tr. Gravel, contains Mica, Loose, Moist	18.0 - 21.5	54			20.0 - 21.5	8-13-19	54	16.2							
7	Topsoil	0.0 - 1.0	65			0.0 - 1.5	2-1-2	65	19.6							
	Sandy CLAY, Reddish-brown, Soft, Moist	1.0 - 3.0														
	F-M Clayey SAND, Reddish-brown, Firm, Moist	3.0 - 11.0	66			5.0 - 6.5	2-5-10	66	23.9							
	Sandy CLAY, contains Mica, Red-White, Soft, Moist	11.0 - 13.0	67			10.0 - 11.5	3-4-4	67	14.2							Mica & Sand layer @ 11 ft Highly micaceous below 11 ft
	ditto, Reddish-brown	13.0 - 18.0	68			15.0 - 16.5	3-4-7	68	16.6							
	F-M Clayey SAND, contains Mica, Tan-White, Soft Moist	18.0 - 21.5	69			20.0 - 21.5	4-5-5	69	26.8							
8	Unable to Perform Boring															Tractor trailer was parked over the concrete core
9	FMC Gravely SAND w/Clay, Brown, Moist	0.8 - 1.3	6			0.8 - 2.3	4-4-4	6	28.4							10" Concrete pavement underlain by 6" of aggregate base
	F-M Clayey SAND, Reddish-brown, Soft, Moist	1.3 - 3.0	7			5.0 - 6.5	10-3-3	7	35.7							
	CLAY w/Fine Sand, contains Mica, Reddish-brown, Soft, Moist	3.0 - 13.0	8			10.0 - 11.5	3-6-7	8	23.6							Highly micaceous between 8 ft and 13 ft
	ditto, contains Gravel, low Mica content	13.0 - 16.5	9			15.0 - 16.5	2-4-6	9	23.0							

AUSTIN BROCKENBROUGH & ASSOCIATES, L.L.P.
Consulting Engineers
P.O. Box 4800 Chester, Virginia 23831

COMMONWEALTH OF VIRGINIA
DAVID T. D. WARRINER
No. 018681
8/17/06
PROFESSIONAL ENGINEER

VIRGINIA DEPT. OF TRANSPORTATION
FREDERICKSBURG SAFETY REST AREA AND WELCOME CENTER
I-95 SOUTH, FREDERICKSBURG, VIRGINIA

PROJECT CODE: 501-06501-007

Rawlings Wilson & Associates
ARCHITECTS PLANNERS
1100 NORTH THOMPSON STREET
RICHMOND, VIRGINIA 23230
(804) 359-9141 FAX(804) 359-5715

SHEET TITLE: BORING LOGS

DRAWN: RTH
CHECKED: GWA
RWA NO.: 189001
DATE: 8/17/06

DRAWING NO. B1.2
SHEET ___ OF ___

6 D1.1 | D1.1 EXISTING VENDING BLDG. REAR FACADE

BUILDING 'B' - ALL TO BE DEMOLISHED

7 D1.1 | D1.1 EXISTING VENDING BLDG. FRONT FACADE

BUILDING 'B' - ALL TO BE DEMOLISHED

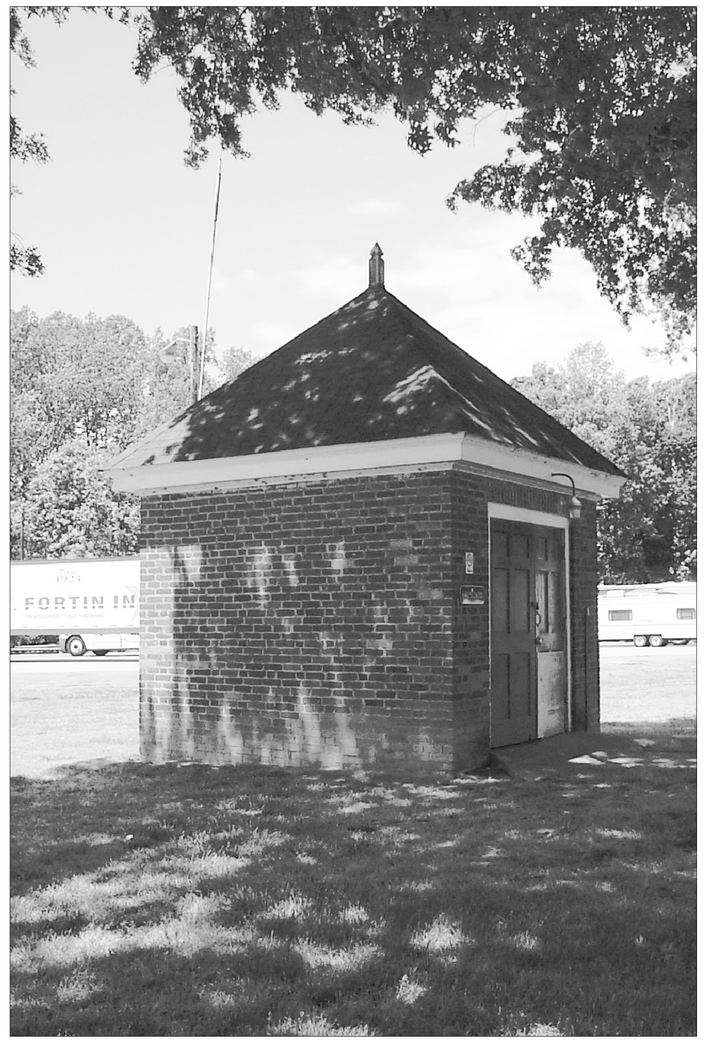

8 D1.1 | D1.1 EXISTING STORAGE SHED

BUILDING 'C' - ALL TO BE DEMOLISHED

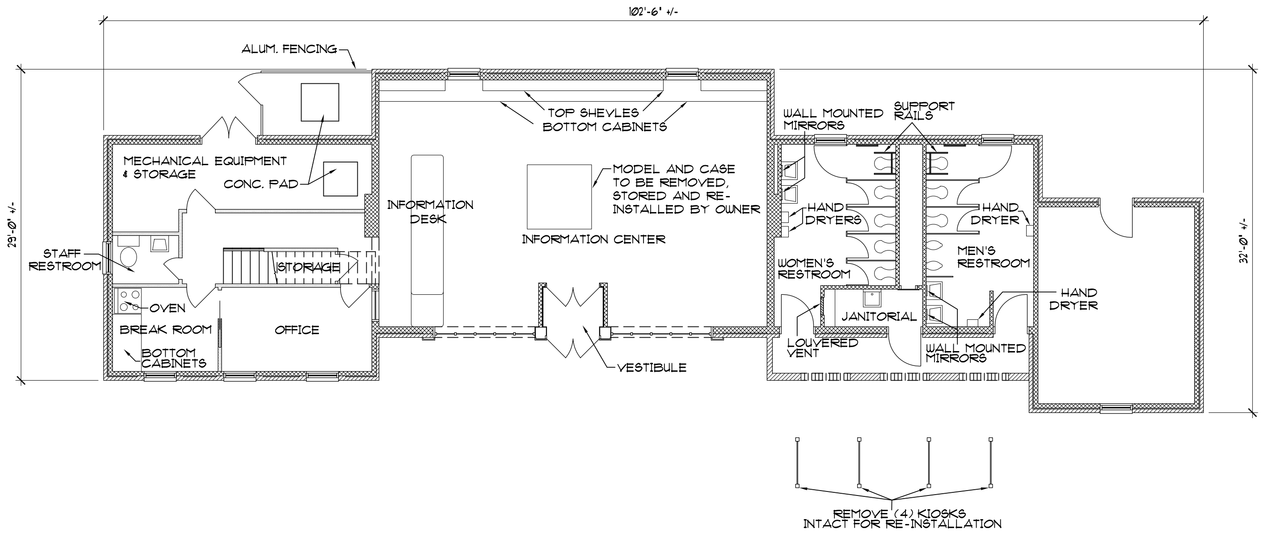

1 D1.1 | D1.1 EXISTING REST AREA BLDG - FIRST FL. PLAN

SCALE: 1/8" = 1'-0"

BUILDING 'A' - ALL TO BE DEMOLISHED

BRICK
CONCRETE BLOCK
STUD PARTITION

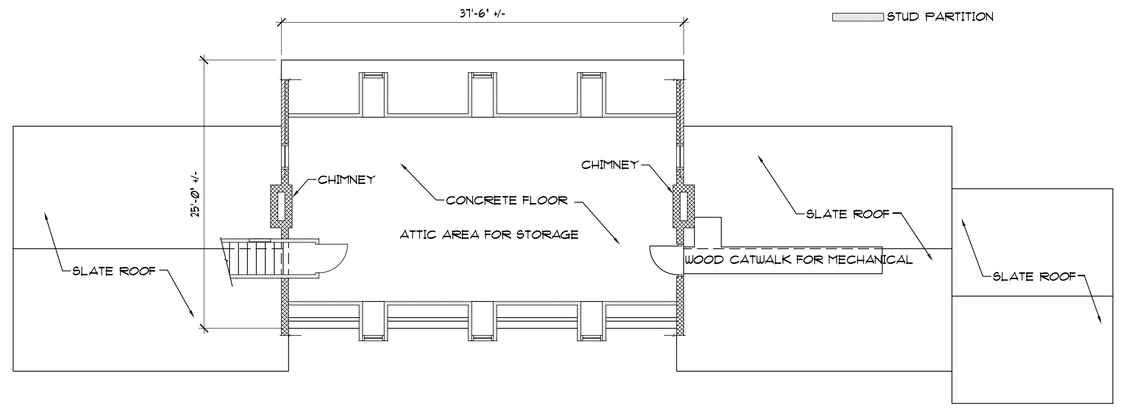

2 D1.1 | D1.1 EXISTING REST AREA BLDG - SECOND FL. PLAN

SCALE: 1/8" = 1'-0"

BUILDING 'A' - ALL TO BE DEMOLISHED

9 D1.1 | D1.1 EXISTING REST AREA - REAR FACADE

BUILDING 'A' - ALL TO BE DEMOLISHED

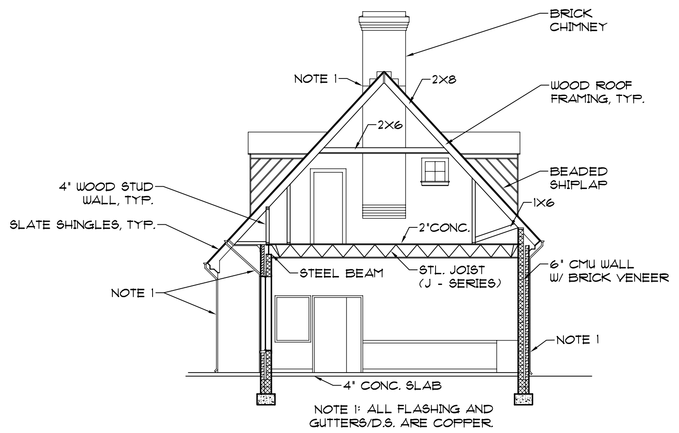

3 D1.1 | D1.1 EXISTING REST AREA BLDG. SECTION

SCALE: 1/8" = 1'-0"

BUILDING 'A' - ALL TO BE DEMOLISHED

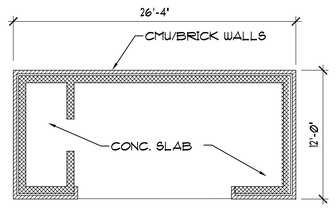

4 D1.1 | D1.1 EXISTING VENDING BLDG. PLAN

SCALE: 1/8" = 1'-0"

BUILDING 'B' - ALL TO BE DEMOLISHED

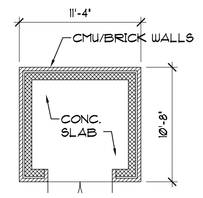

5 D1.1 | D1.1 EXISTING STORAGE BLDG PLAN

SCALE: 1/8" = 1'-0"

BUILDING 'C' - ALL TO BE DEMOLISHED

0 4' 8' 16'

10 D1.1 | D1.1 EXISTING REST AREA - FRONT FACADE

BUILDING 'A' - ALL TO BE DEMOLISHED

AN ASBESTOS INSPECTION WAS PERFORMED AND ASBESTOS-CONTAINING MATERIALS WERE FOUND. THE ASBESTOS-CONTAINING MATERIALS SHALL BE REMOVED BY THE OWNER PRIOR TO FULL DEMOLITION OF THE BUILDINGS.

A LEAD-BASED PAINT INSPECTION WAS PERFORMED AND PAINT CONTAINING LEAD WAS FOUND. THE LEAD-BASED PAINT SURVEY/ INSPECTION REPORT IS LOCATED IN THE PROJECT MANUAL FOR THE CONTRACTOR'S INFORMATION. THE CONTRACTOR SHALL BE RESPONSIBLE FOR COMPLIANCE WITH ALL REQUIREMENTS OF THE VIRGINIA OCCUPATIONAL SAFETY AND HEALTH ADMINISTRATION REGULATIONS REGARDING LEAD-BASED PAINT PROTECTION FOR WORKERS

COMMONWEALTH OF VIRGINIA
James T. Rice
Certificate No. 3935
8/17/06
CERTIFIED ARCHITECT

VIRGINIA DEPT. OF TRANSPORTATION

FREDERICKSBURG SAFETY REST AREA AND WELCOME CENTER

I-95 SOUTH, FREDERICKSBURG, VIRGINIA

PROJECT CODE: 501-06501-007

Rawlings Wilson & Associates
ARCHITECTS PLANNERS
1100 NORTH THOMPSON STREET
RICHMOND, VIRGINIA 23230
(804) 358-9141 FAX(804) 359-5715

SHEET TITLE: BUILDING DEMOLITION

DRAWN	MMC
CHECKED	EJR
RWA NO.	1890.01
DATE	8/17/06

DRAWING NO. D1.1

SHEET ___ OF ___

FINISH SCHEDULE- FIRST FLOOR

ROOM NO.	ROOM NAME	FLOOR	BASE	WALLS MAT'L	WALLS FINISH	CEILING MAT'L	CEILING FINISH	CEILING HEIGHT	SEE NOTES BELOW
100	FOYER	TERRAZZO	TERR	GFCM	- -	GPDW	PNTD	11'-0"	
101	JANITORIAL	EFC	EFC	GFCM, CMU	PNTD	GPDW	PNTD	8'-0"	
102	MULTI-USE TOILET	EFC	EFC	P.T.	- -	GPDW	PNTD	10'-0"	
103	MAIN CORRIDOR	TERR	TERR	GFCM	- -	GPDW	PNTD	11'-0"	
104	WOMEN'S RESTROOM	EFC	EFC	P.T.	- -	GPDW	PNTD	10'-0"	
104A	CHASE	SEALED CONC.	- -	GFCM, CMU	--	--	--		
105	WOMEN'S RESTROOM	EFC	EFC	P.T.	- -	GPDW	PNTD	10'-0"	
105A	CHASE	SEALED CONC.	- -	CMU	--	--	--		
106	WOMEN'S RESTROOM	EFC	EFC	P.T.	- -	GPDW	PNTD	10'-0"	
106A	CHASE	SEALED CONC.	- -	CMU	--	--	--		
106B	CHASE	SEALED CONC.	- -	CMU	--	--	--		
107	MEN'S RESTROOM	EFC	EFC	P.T.	- -	GPDW	PNTD	10'-0"	
107A	CHASE	SEALED CONC.	- -	CMU	- -	--	--		
108	MEN'S RESTROOM	EFC	EFC	P.T.	- -	GPDW	PNTD	10'-0"	
108A	CHASE	SEALED CONC.	- -	CMU	--	--	--		
108B	CHASE	SEALED CONC.	- -	GFCM, CMU	--	--	--		
109	VENDING	TERR	TERR	GFCM	- -	GPDW	PNTD	11'-0"	NOTE 1
110	VENDING STORAGE	VCT	VB	GFCM, CMU	PNTD	GPDW	PNTD	11'-0"	
111	WELCOME CENTER	TERR	TERR	GFCM	- -	GPDW	AP	11'-0"	NOTE 1
112	MANAGER	CPT	VB	GFCM	- -	GPDW	PNTD	9'-0"	
113	LITERATURE STORAGE	VCT	VB	GFCM, CMU	PNTD	GPDW	PNTD	8'-0"	
114	CORRIDOR	TERR	TERR	GFCM	- -	GPDW	PNTD	11'-0"	
115	EDU/PRESENTATION RM.	TERR	TERR	GFCM	- -	GPDW	PNTD	11'-0"	NOTE 1
115A	A/V STORAGE	VCT	VB	GFCM	- -	GPDW	PNTD	8'-0"	
115B	CHAIR STORAGE	VCT	VB	GFCM, CMU	PNTD	GPDW	PNTD	9'-0"	
115C	CORRIDOR	VCT	VB	GFCM, CMU	PNTD	GPDW	PNTD	8'-0"	
116	TROOPER OFFICE	VCT	VB	GFCM, CMU	PNTD	GPDW	PNTD	9'-0"	
117	MECH/ELEC. ROOM	SEALED CONC.	VB	GFCM, CMU	PNTD	GPDW	PNTD	10'-0"	
118	FOYER	TERR	TERR	GFCM	- -	GPDW	AP	11'-0"	
119	CORRIDOR	VCT	VB	GFCM, CMU	PNTD	GPDW	AP	11'-0"	
120	TOILET	VCT	VB	GFCM, CMU	PNTD	GPDW	PNTD	9'-0"	
121	BREAK ROOM	VCT	VB	CMU	PNTD	GPDW	PNTD	9'-0"	
122	SERVER ROOM	VCT	VB	CMU	PNTD	ARC	--	9'-0"	
123	JANITORIAL	SEALED CONC.	VB	GFCM, CMU	PNTD	EXPOSED STR.	PNTD		

ABBREVIATIONS

ACPC	ACOUSTICAL PANEL CEILING	PT	PORCELAIN TILE
CPT	CARPET (SEE GENERAL NOTE "A")	VB	VINYL BASE
EFC	EPOXY FLOOR COATING	VCT	VINYL COMPOSITION TILE
GPDW	GYPSUM DRYWALL	GFCM	GROUND-FACE CONCRETE MASONRY UNITS
TERR	TERRAZZO	AP	ACOUSTICAL PLASTER FINISH
		PNTD	PAINTED

REFERENCED FINISH NOTES:

1. ACOUSTICAL WALL PANELS - REF: INTERIOR ELEVATIONS ON SHEET A4.2 AND A4.3
2. HEIGHT ABOVE VENDING MACHINES: 9'-0"

GENERAL FINISH NOTES:

A. FOR FLOORING PATTERNS, REF: A1.3
B. FOR RESTROOM TILE PATTERNS, REF: 4.1
C. FOR GFCM BAND COLORS, REF: A4.2 AND A4.3. GROUND-FACE UNITS TO BE USED ONLY UP TO CEILING LEVEL IN SPACES INDICATED FOR GFCM.

KEYED PLAN NOTES 01

01 ENTRANCE MATS IN RECESSED SLAB REF: DETAIL 3 / A1.3 AND SECTION 12484 IN PROJECT MANUAL

02 SKYLIGHT ABOVE - REF: DETAIL 4 / A7.1 AND SECTION 08610 IN PROJECT MANUAL

03 BASE AND WALL CABINETS - REF: ELEV. 4 / A4.3

04 BASE AND WALL CABINETS - REF: ELEV. 5 / A4.3

05 METAL SHELVING - REF: LAYOUT & SCHEDULE ON SHEET A1.2 REF: SECTION 10561 IN PROJECT MANUAL

06 FIXED PICNIC TABLES - REF: SECTION 12640 IN PROJ. MANUAL

07 SHIPS LADDER - REF: 5 / A3.1

08 COUNTER - REF: SECTION 9 / A4.2

09 PAY PHONES BY OWNER

10 BENCH - REF: SECTION 02870 IN PROJECT MANUAL

11 SOLID SURFACING SILLS AND APRONS - ALL WINDOWS REF: WINDOW DETAILS

12 VENDING MACHINES - N.I.C.

13 OPERABLE PANEL PARTITION - 1 / A7.1 AND SECTION 10651 IN PROJECT MANUAL

14 BROCHURE KIOSKS - REF: 8 / A4.3

15 ROLLER BLINDS - (2) 6' WIDE BY HT. OF TRANSOM AND DOORS

16 FLAT SCREEN TELEVISION REF: 7 / A3.2 FOR RECESS. SURFACE-MOUNTED IN WELCOME CENTER

17 4'-0" X 6'-0" CONFERENCE CABINET - REF. SECT. 10100 IN PROJ. 1

18 TRASH RECEPTACLE- REF: SECTION 02870 IN PROJECT MANUAL

19 RECYCLE BIN- REF: SECTION 02870 IN PROJECT MANUAL

20 TABLE AND CHAIRS- REF: SECTION 12640 IN PROJECT MANUAL

21 MAP DISPLAY CASE REF: SECTION 10100 IN PROJECT MANUAL

22 KENMORE SCALE HOUSE MODEL AND CASE TO BE REINSTALLED IN NEW WELCOME CENTER BY OWNER

23 A/V SHELVING- REF: DETAIL 18/A4.3

24 COUNTER IN VENDING ROOM REF: DETAIL 19/A4.3

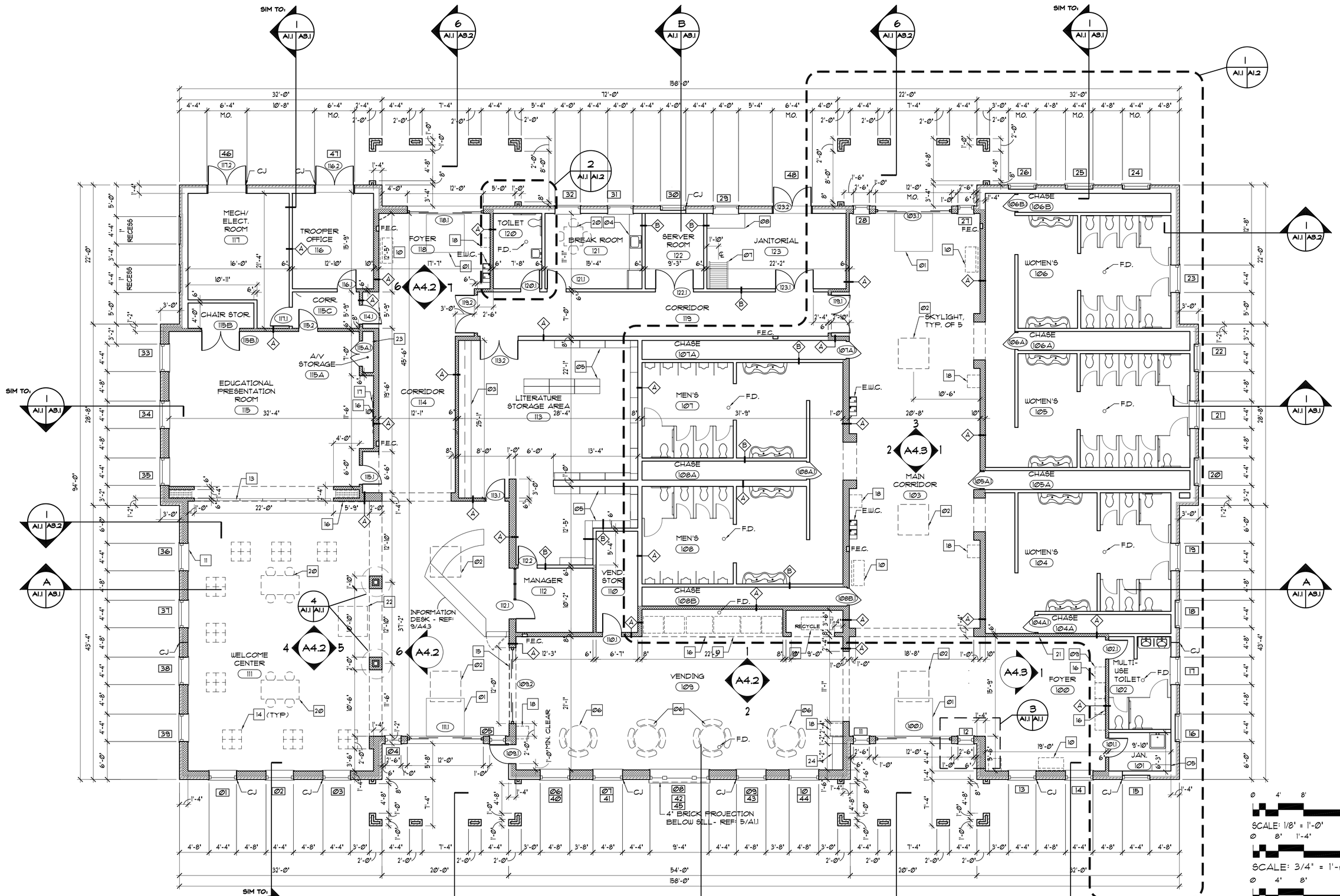

GENERAL PLAN NOTES

A. ALL ENTRANCES ARE HANDICAPPED-ACCESSIBLE

B. FOR ACOUSTICAL WALL- OR CEILING-MOUNTED PANELS, REF: INTERIOR ELEVATIONS AND REFLECTED CEILING PLAN

1 A1.1 A1.1 FLOOR PLAN
SCALE: 1/8" = 1'-0"

PLAN NORTH
TRUE NORTH

SCALE: 1/8" = 1'-0"
SCALE: 3/4" = 1'-0"
SCALE: 1 1/2" = 1'-0"

WALL LEGEND

- GROUND-FACE CMU WALL - FINISHED FACE ON BOTH SIDES, TYP. AT INTERIOR WALLS
- CMU WALL
- BRICK VENEER

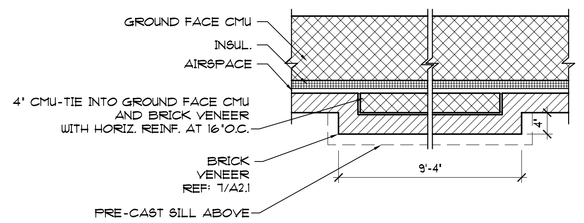

5 A1.1 A1.1 PROJECTION AT FRONT
SCALE: 3/4" = 1'-0" AT WINDOW 08

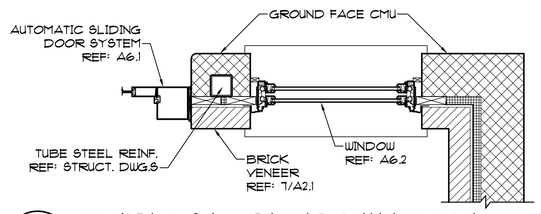

3 A1.1 A1.1 TYPICAL SIDE WINDOW DTL.
SCALE: 3/4" = 1'-0"
WINDOWS - 4, 5, 11, 12, 27, 28
REF: A6.1 (AUTOMATIC SLIDING DOOR) & A6.2 (WINDOW) FOR DETAILS AND SCHEDULE

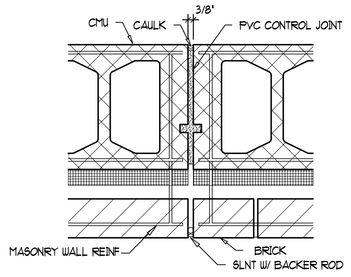

6 A1.1 A1.1 TYPICAL CONTROL JOINT
SCALE: 1-1/2" = 1'-0"

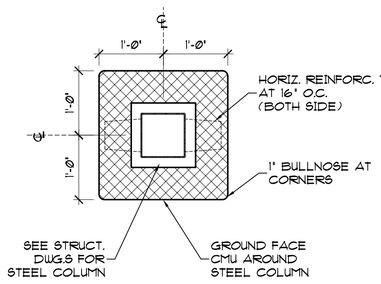

4 A1.1 A1.1 WELCOME CENTER COL. PLAN
SCALE: 3/4" = 1'-0"

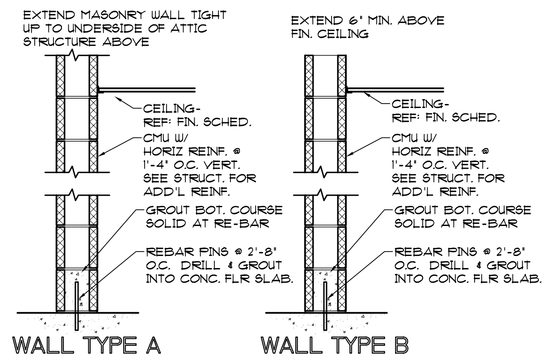

REFERENCE LEGEND AND FINISH SCHEDULE FOR TYPE OF CMU THICKNESS AS INDICATED ON PLAN
GROUND-FACE CMU UP TO CEILING -- STANDARD CMU ABOVE CEILING

2 A1.1 A1.1 INTERIOR WALL TYPES
SCALE: 3/4" = 1'-0"
ALL PARTITIONS TO BE PARTITION TYPE B UNLESS OTHERWISE NOTED

COMMONWEALTH OF VIRGINIA
James T. Rice
Certificate No. 3935
CERTIFIED ARCHITECT

VIRGINIA DEPT. OF TRANSPORTATION
FREDERICKSBURG SAFETY REST AREA AND WELCOME CENTER
I-95 SOUTH, FREDERICKSBURG, VIRGINIA
PROJECT CODE: 501-06501-007

Rawlings Wilson & Associates
ARCHITECTS PLANNERS
1100 NORTH THOMPSON STREET
RICHMOND, VIRGINIA 23230
(804) 358-9141 FAX(804) 359-5715

SHEET TITLE: FLOOR PLAN FINISH SCHEDULE

DRAWN	TMC
CHECKED	EJR
RWA NO.	1890.01
DATE	8/17/06

DRAWING NO. A1.1
SHEET ___ OF ___

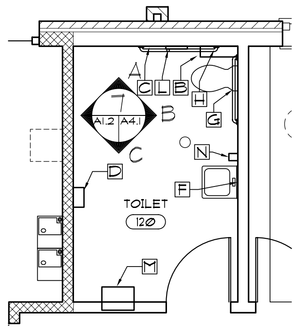

2 A1.1 A1.2 ENLARGED TOLET PLAN-TOILET 120

SCALE: 1/4" = 1'-0"

PLAN NORTH
TRUE NORTH

TOILET ACCESSORY SCHEDULE

SYMBOL	ITEM	PRODUCT NUMBERS*	MOUNTING HEIGHT A.F.F.
A	NOT USED		SEE BELOW
B	TOILET TISSUE DISPENSER		SEE BELOW
C	SANITARY NAPKIN DISPOSAL		SEE BELOW
D	HAND DRYER		SEE BELOW
D1	HAND DRYER		SEE BELOW
E	CHILD PROTECTION SEAT		SEE BELOW
F	MIRROR-T'-0" X 3''-0" U.O.N.		SEE BELOW
G	36" GRAB BAR		REF: 8/A4.1
H	42" GRAB BAR		REF: 8/A4.1
J	SURFACE MNTD. BABY CHANGING STATION		SEE BELOW
K	MOP AND BROOM HOLDER		SEE BELOW
L	18" VERTICAL GRAB BAR		REF: 8/A4.1
M	PAPER TOWEL WASTE RECEPTACLE		SEE BELOW
N	SURFACE MOUNTED SOAP DISPENSER		SEE BELOW
N1	SURFACE MOUNTED SOAP DISPENSER		SEE BELOW

MOUNTING HEIGHTS FOR WASHROOM ACCESSORIES

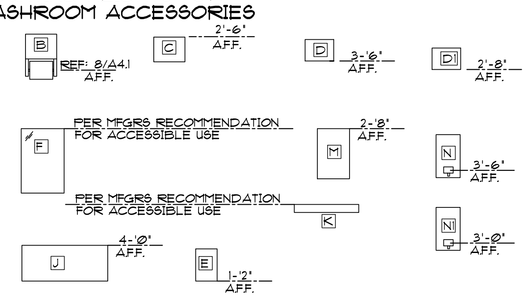

NOTES: DRAWINGS ARE NOT TO SCALE
MOUNTING HEIGHTS ARE BASED ON MODELS SPECIFIED

NOTE: PROVIDE SOLID WD BLKG BEHIND WALL FINISH FOR MOUNTING ALL TLT ACCESSORIES WHERE APPLICABLE.

ALL TOILET ACCESSORY NUMBERS INDICATED ARE BASED ON BOBRICK - PROVIDE BOBRICK PRODUCTS OR EQUAL.

METAL SHELVING SCHEDULE

LABEL	QUANTITY	SIZE	
A	28	1'-2" X 4'-0"	SEE BELOW
B	7	1'-2" X 3'-0"	SEE BELOW
C	1	1'-0" X 3'-0"	JAN. 101

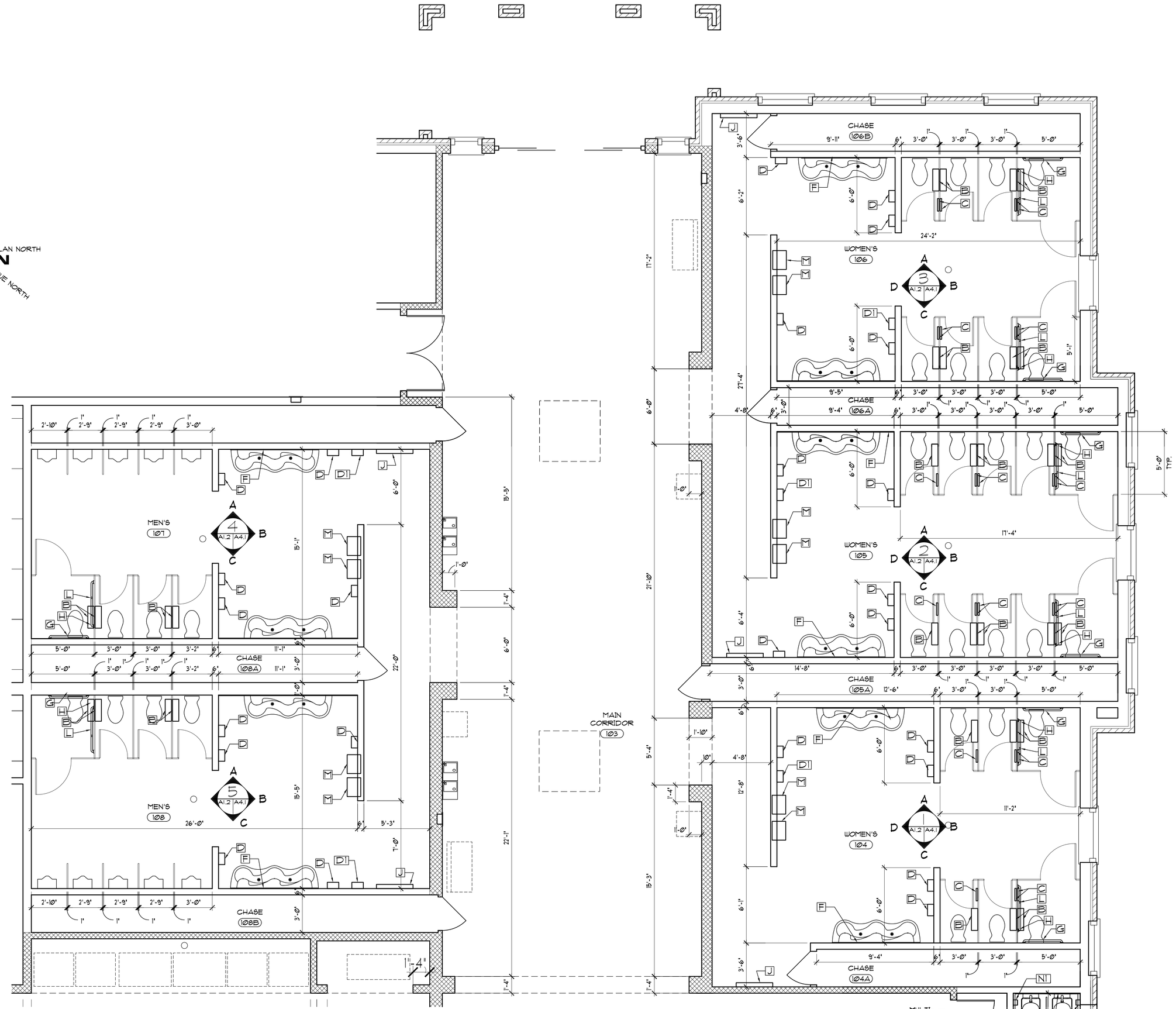

SCALE: 1/8" = 1'-0"

SCALE: 1/4" = 1'-0"

1 A1.1 A1.2 ENLARGED TOILET PLAN - MAIN CORRIDOR

SCALE: 1/4" = 1'-0"

PLAN NORTH
TRUE NORTH

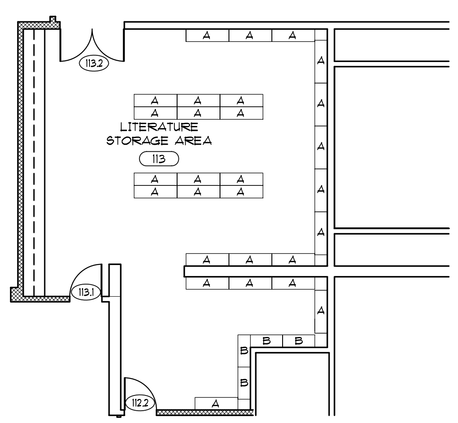

3 A1.1 A1.2 SHELVING PLAN - ROOM 113

SCALE: 1/8" = 1'-0"

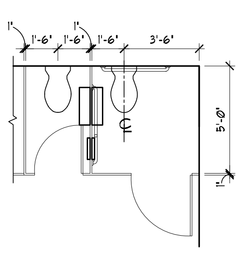

4 A1.1 A1.2 TOILET LAYOUT-TYP.

SCALE: 1/4" = 1'-0"

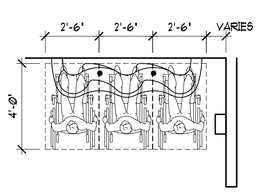

5 A1.1 A1.2 LAV. CLEARANCES -TYP.

SCALE: 1/4" = 1'-0"

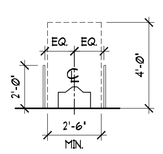

ADA URNAL RIM TO BE 17" MAX. AFF.- TYP. OF 2

6 A1.1 A1.2 URINAL CLEARANCES -TYP.

SCALE: 1/4" = 1'-0"

COMMONWEALTH OF VIRGINIA
James T. Rice
Certificate No. 3935
8/17/06
CERTIFIED ARCHITECT

VIRGINIA DEPT. OF TRANSPORTATION
FREDERICKSBURG SAFETY REST AREA AND WELCOME CENTER
I-95 SOUTH, FREDERICKSBURG, VIRGINIA

PROJECT CODE: 501-06501-007

Rawlings Wilson & Associates
ARCHITECTS PLANNERS
1100 NORTH THOMPSON STREET
RICHMOND, VIRGINIA 23230
(804) 358-9141 FAX(804) 359-5715

SHEET TITLE: ENLARGED PLANS

DRAWN	TMC
CHECKED	EJR
RWA NO.	1890.01
DATE	8/17/06

DRAWING NO. A1.2
SHEET ___ OF ___

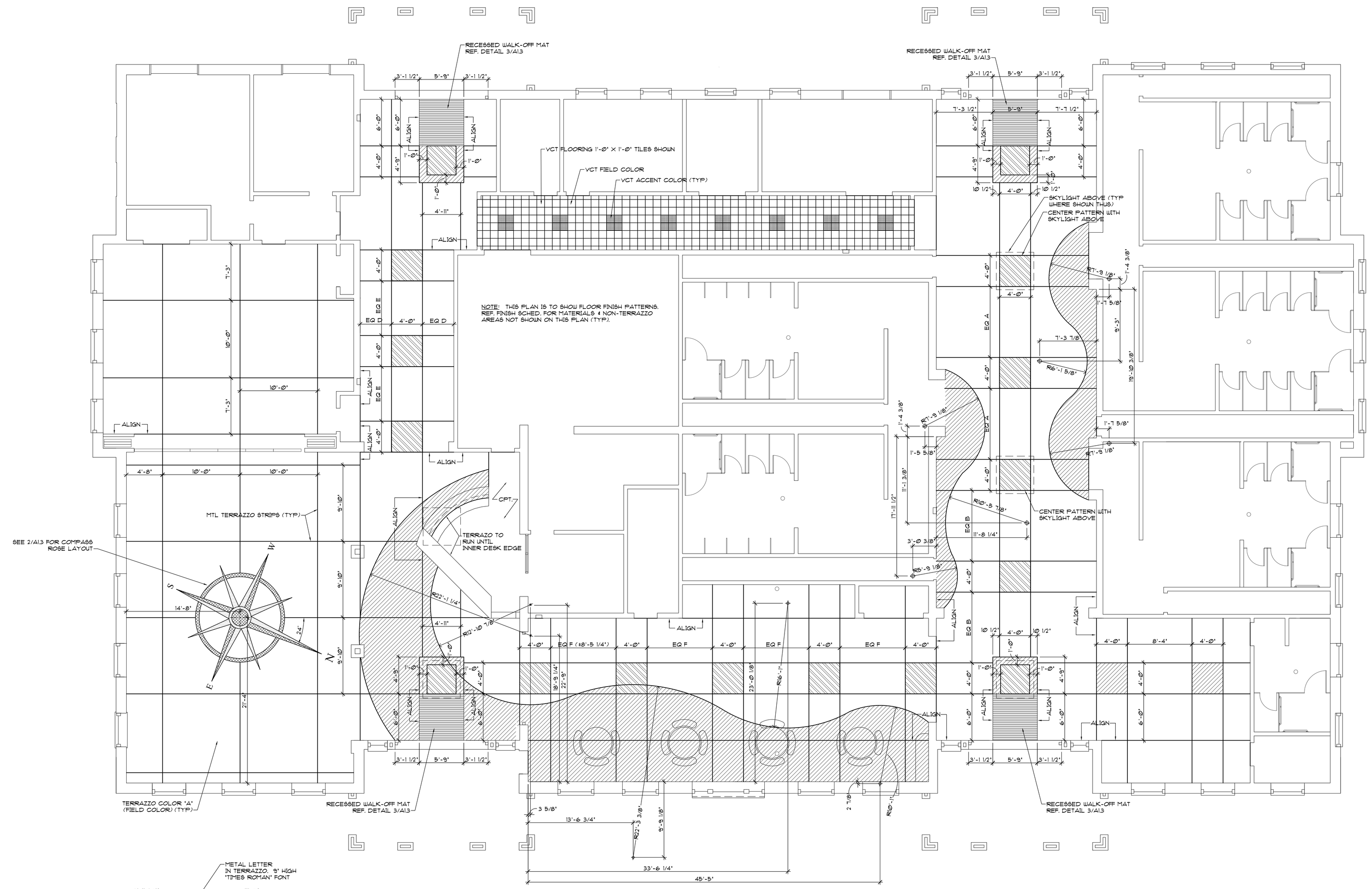

TERRAZZO COLOR LEGEND

- TERRAZZO COLOR 'A' (FIELD COLOR) AGGREGATE TO BE MARBLE CHIPS
- TERRAZZO COLOR 'B': AGGREGATE TO INCLUCE 40% RECYCLED GLASS CHIPS.
- TERRAZZO COLOR 'C': AGGREGATE TO INCLUCE 40% RECYCLED GLASS CHIPS.
- TERRAZZO COLOR 'D': AGGREGATE TO INCLUCE 40% RECYCLED GLASS CHIPS.
- TERRAZZO COLOR 'E': AGGREGATE TO INCLUCE 40% RECYCLED GLASS CHIPS.

0 2'-8" 5'-4" 10'-8"
SCALE: 3/16" = 1'-0"

0 2' 4' 8'
SCALE: 1/4" = 1'-0"

1 FLOOR PATTERNS PLAN

A1.1 A1.3
SCALE: 3/16" = 1'-0"

PLAN NORTH
TRUE NORTH

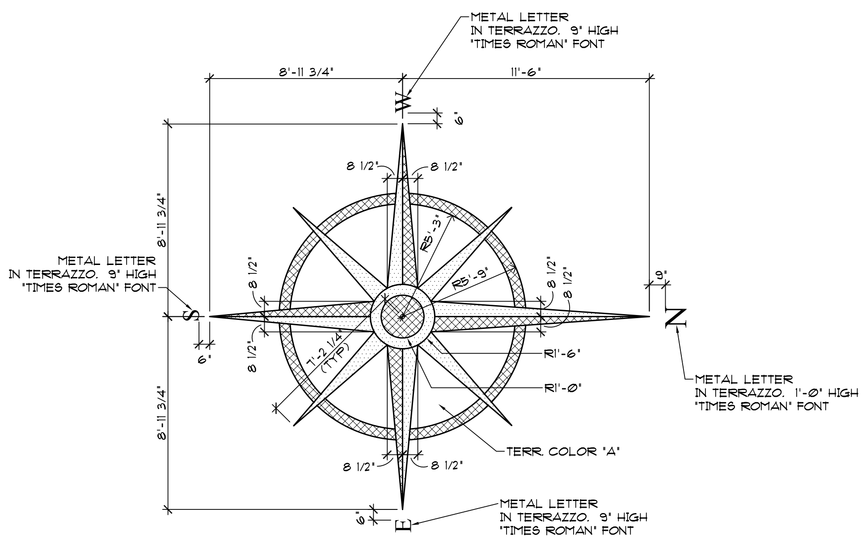

2 COMPASS ROSE DETAIL

A1.3 A1.3
SCALE: 1/4" = 1'-0"

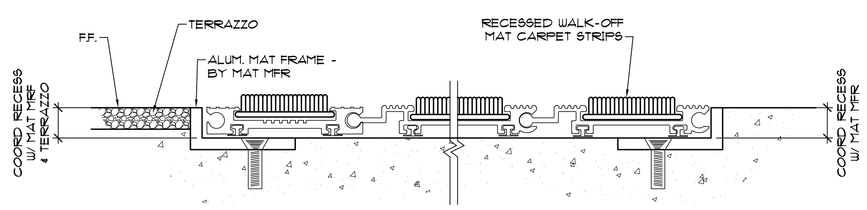

3 RECESSED MAT DETAIL

A1.3 A1.3
SCALE: ACTUAL SIZE

COMMONWEALTH OF VIRGINIA
James T. Rice
Certificate No. 3935
8/17/06
CERTIFIED ARCHITECT

VIRGINIA DEPT. OF TRANSPORTATION
FREDERICKSBURG SAFETY REST AREA AND WELCOME CENTER
I-95 SOUTH, FREDERICKSBURG, VIRGINIA

PROJECT CODE: 501-06501-007

Rawlings Wilson & Associates
ARCHITECTS PLANNERS
1100 NORTH THOMPSON STREET
RICHMOND, VIRGINIA 23230
(804) 358-9141 FAX(804) 359-5715

SHEET TITLE: FLOOR PATTERNS PLAN AND DETAILS

DRAWN	PS
CHECKED	EJR
RWA NO.	1890.01
DATE	8/17/06

DRAWING NO. A1.3
SHEET ___ OF ___

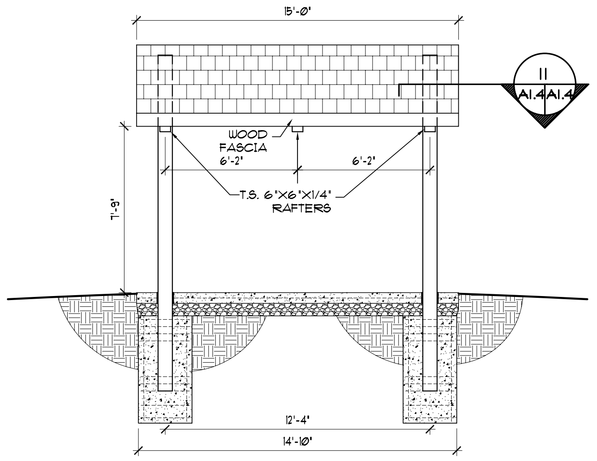

10 A1.4 A1.4 PICNIC STR. SECTION

SCALE: 1/4" = 1'-0"

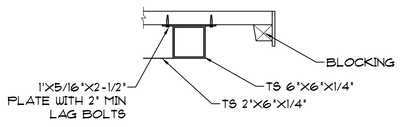

11 A1.4 A1.4 ROOF DETAIL

SCALE: 3/4" = 1'-0" SITE STRUCTURES

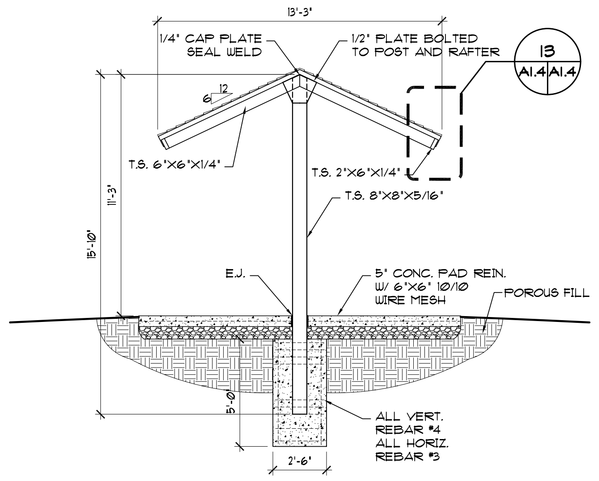

12 A1.4 A1.4 PICNIC SHELTER SECT.

SCALE: 1/4" = 1'-0"

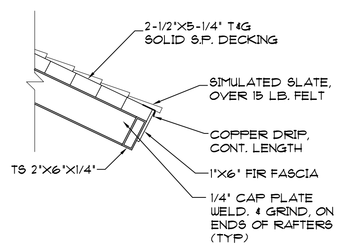

13 A1.4 A1.4 ROOF DETAIL

SCALE: 3/4" = 1'-0" SITE STRUCTURES

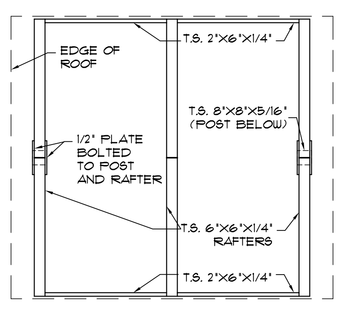

15 A1.4 A1.4 PICNIC SHELTER ROOF FRAMING PLAN

SCALE: 1/4" = 1'-0" TYP., ADJUST DIM. FOR MAP KIOSK

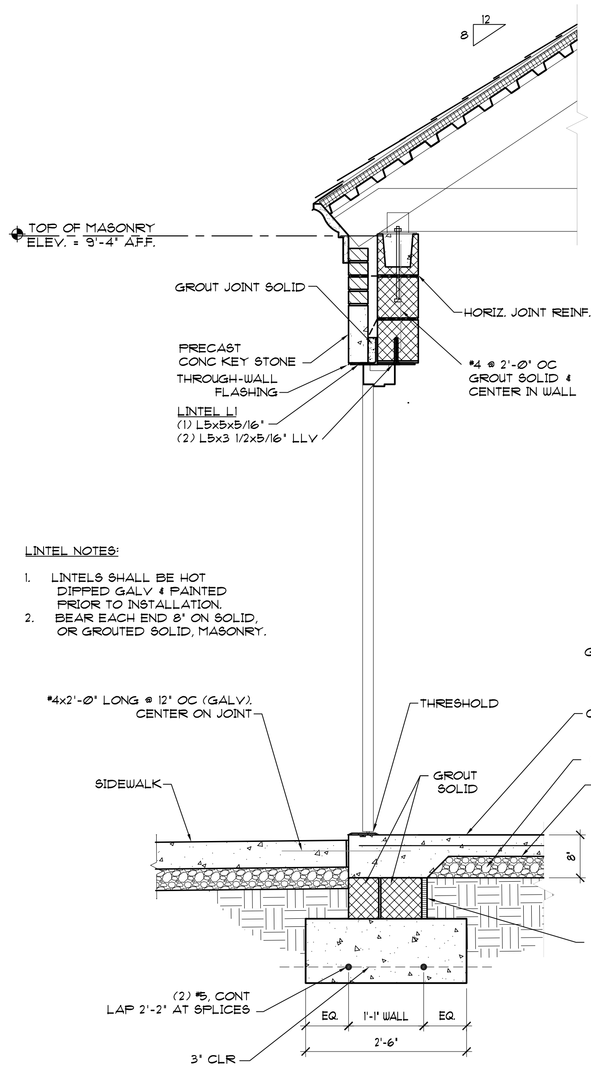

9 A1.4 A1.4 WALL SECTION

SCALE: 3/4" = 1'-0"

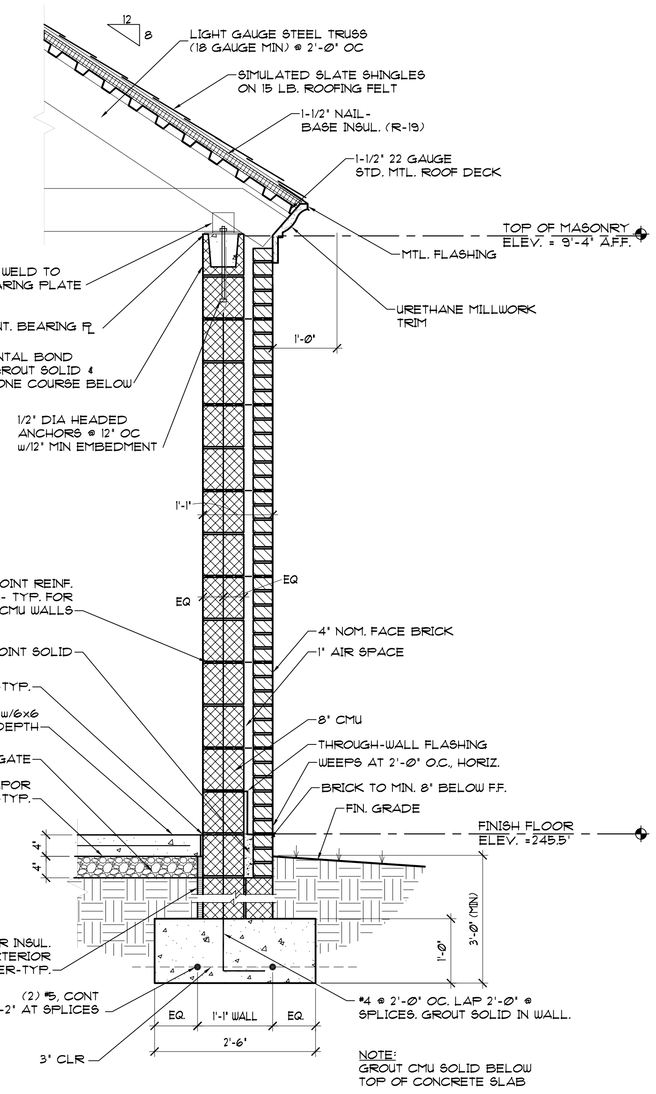

8 A1.4 A1.4 WALL SECTION

SCALE: 3/4" = 1'-0"

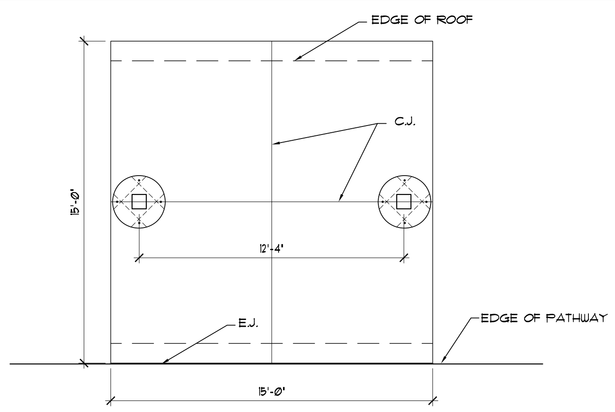

14 A1.4 A1.4 PICNIC STR. SLAB PLAN

SCALE: 1/4" = 1'-0" TYP., ADJUST DIM. FOR MAP KIOSK

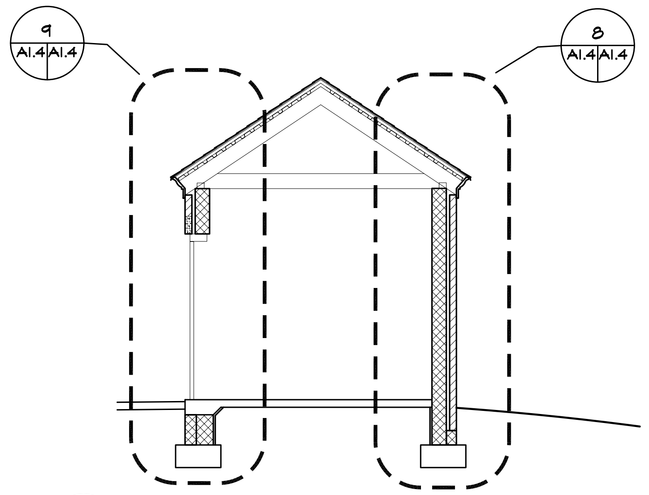

7 A1.4 A1.4 BUILDING SECTION

SCALE: 1/4" = 1'-0"

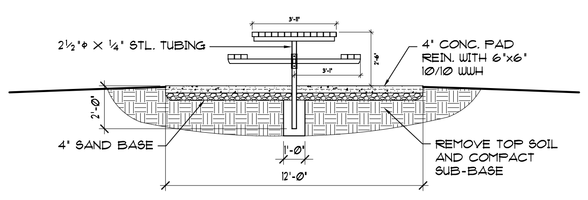

16 A1.4 A1.4 PICNIC TABLE SECTION

SCALE: 1/4" = 1'-0"

PICNIC TABLE NOTES:
1. ALL WOOD TO BE CLEAR KILN-DRIED 3"X4" (NOM.) PRESSURE-TREATED PINE, FREE OF KNOTS.
2. FINISH TO BE BAKED-ON BRONZE POLYESTER POWDER.
3. SPECIFY EMBEDMENT SUPPORT WHEN ORDERING
4. SLOPE SURFACE OF PAD +/- 2% IN DIRECTION OF EXISTING DRAINAGE.
5. OMIT (2) SEATS (OPP. SIDES OF TABLE) FOR HANDICAPPED PICNIC TABLES. COORDINATE ORIENTATION OF TABLE IN FIELD WITH ARCHITECT.

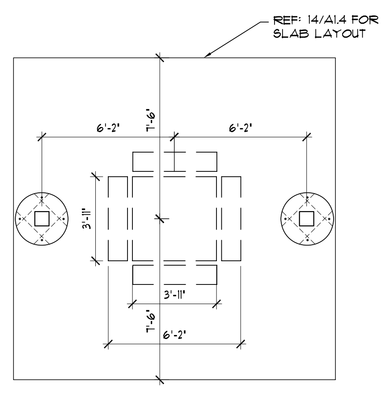

17 A1.4 A1.4 PICNIC TABLE LAYOUT

SCALE: 1/4" = 1'-0"

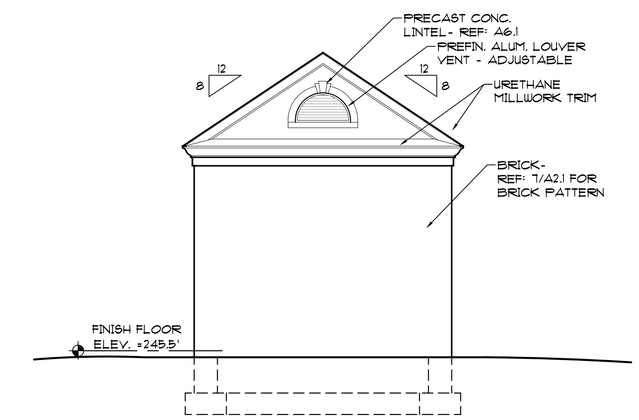

3 A1.4 A1.4 NORTH ELEVATION

SCALE: 1/4" = 1'-0"

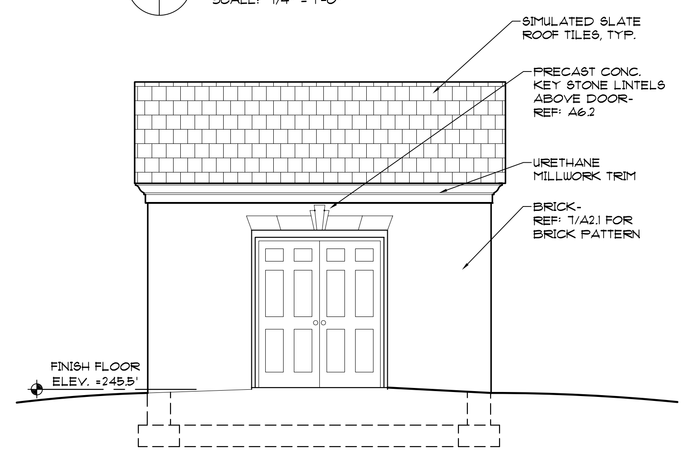

4 A1.4 A1.4 EAST ELEVATION

SCALE: 1/4" = 1'-0"

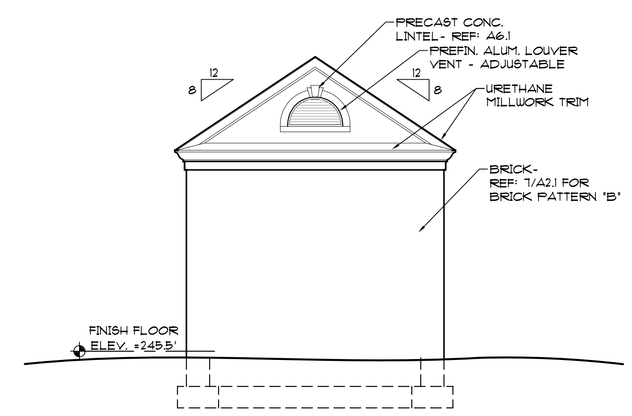

5 A1.4 A1.4 SOUTH ELEVATION

SCALE: 1/4" = 1'-0"

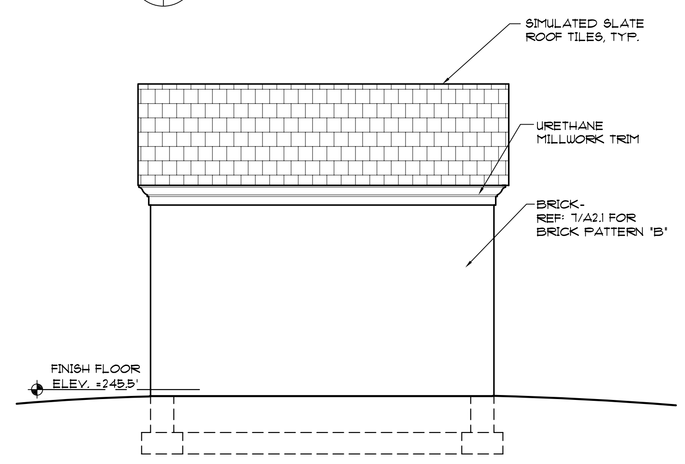

6 A1.4 A1.4 WEST ELEVATION

SCALE: 1/4" = 1'-0"

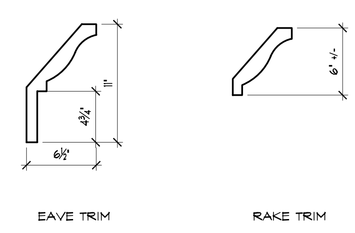

18 A1.4 A1.4 URETHANE TRIM PROFILES

SCALE: 1-1/2" = 1'-0" GROUNDS BLDG.

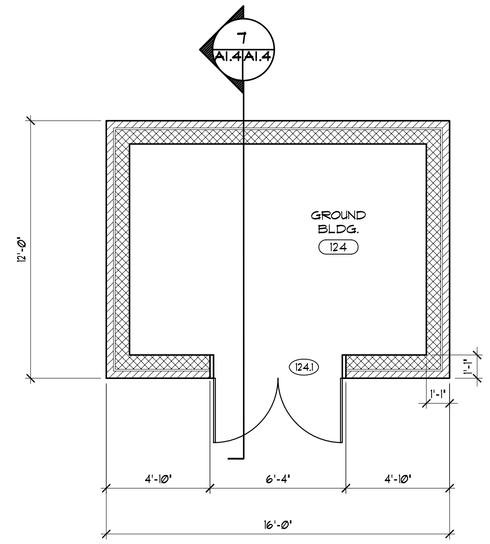

1 A1.4 A1.4 GROUNDS BUILDING PLAN

SCALE: 1/4" = 1'-0"

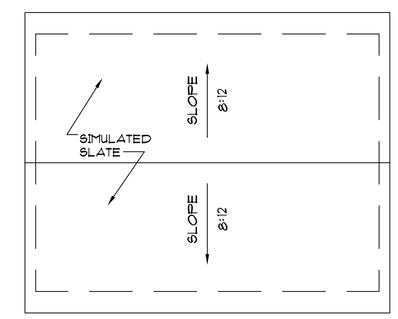

2 A1.4 A1.4 ROOF PLAN

SCALE: 1/4" = 1'-0" GROUNDS BLDG.

FINISH SCHEDULE- GROUNDS BUILDING

ROOM		FLOOR	BASE	WALLS		CEILING			NOTES
NO.	NAME			MATL	FINISH	MATL	HEIGHT	FINISH	
124	GROUNDS BUILDING	--	--	CMU	PNTD	EXP. STRUCT.	--	--	

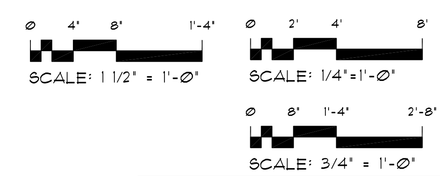

COMMONWEALTH OF VIRGINIA
James T. Rice
Certificate No. 3935
8/17/06
CERTIFIED ARCHITECT

VIRGINIA DEPT. OF TRANSPORTATION
FREDERICKSBURG SAFETY REST AREA AND WELCOME CENTER
I-95 SOUTH, FREDERICKSBURG, VIRGINIA
PROJECT CODE: 501-06501-007

Rawlings Wilson & Associates
ARCHITECTS PLANNERS
1100 NORTH THOMPSON STREET
RICHMOND, VIRGINIA 23230
(804) 358-9141 FAX(804) 359-5715

SHEET TITLE: SITE STRUCTURES

DRAWN	TMC
CHECKED	EJR
RWA NO.	1890.01
DATE	8/17/06

DRAWING NO. A1.4
SHEET ___ OF ___

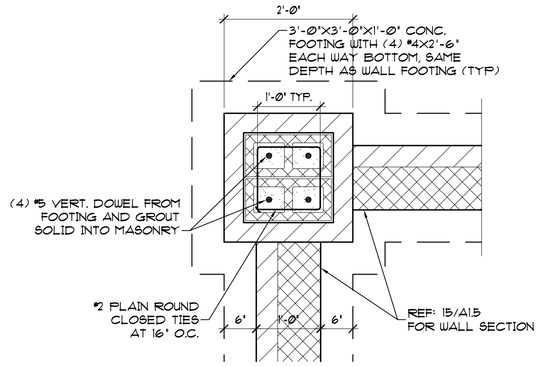

16 A1.5 A1.5 TYPICAL PIER DETAIL

SCALE: 3/4" = 1'-0"

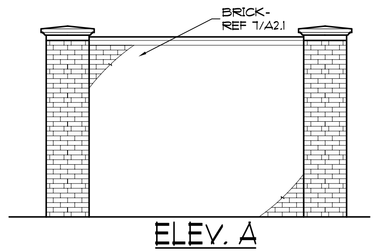

ELEV. A

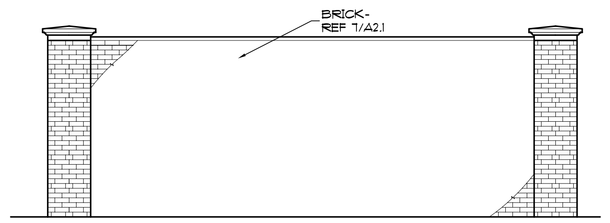

ELEV. B

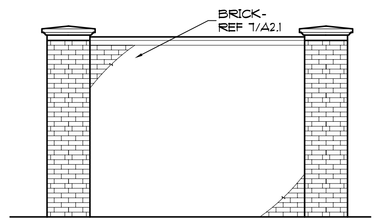

ELEV. C

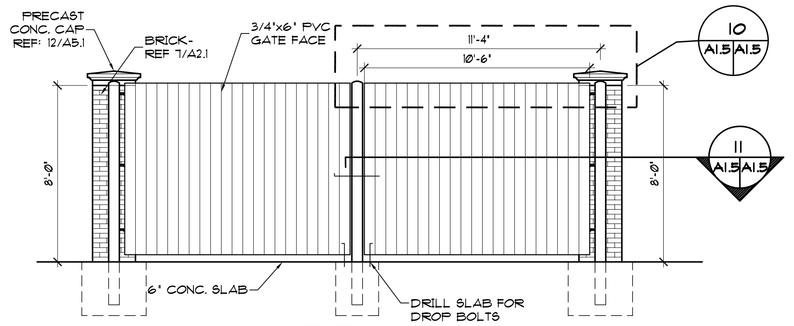

ELEV. D

4 A1.5 A1.5 DUMPSTER ENCLOSURE ELEVATIONS

SCALE: 1/4" = 1'-0"

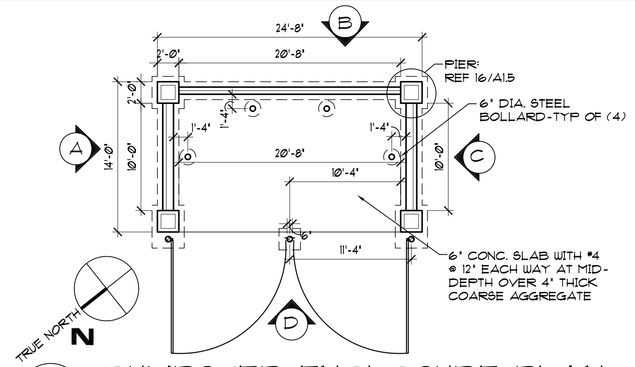

1 A1.5 A1.5 DUMPSTER ENCLOSURE PLAN

SCALE: 1/8" = 1'-0"

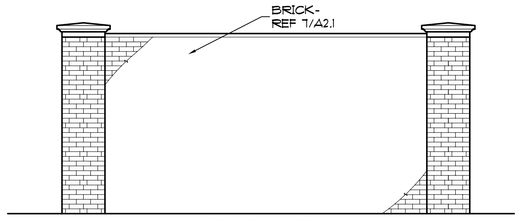

ELEV. E

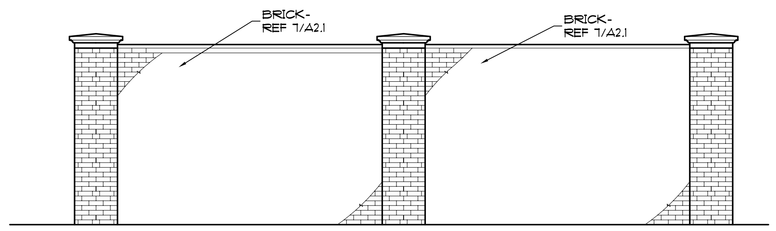

ELEV. F

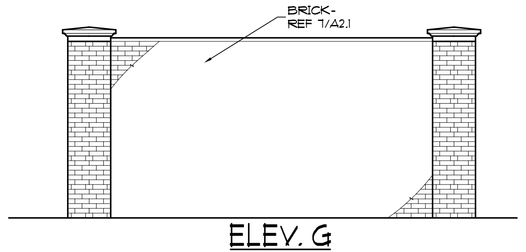

ELEV. G

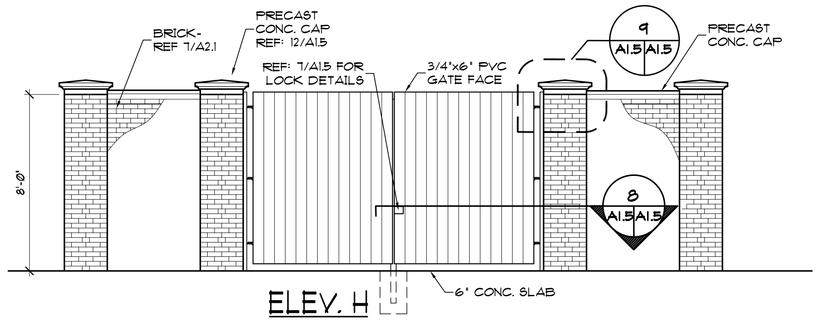

ELEV. H

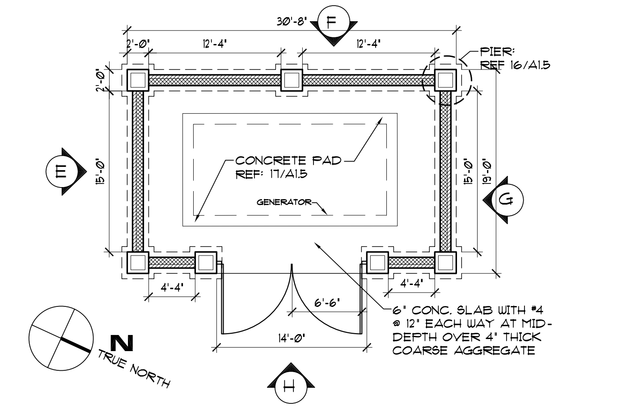

5 A1.5 A1.5 GENERATOR ENCLOSURE ELEVATIONS

SCALE: 1/4" = 1'-0"

2 A1.5 A1.5 GENERATOR ENCLOSURE PLAN

SCALE: 1/8" = 1'-0"

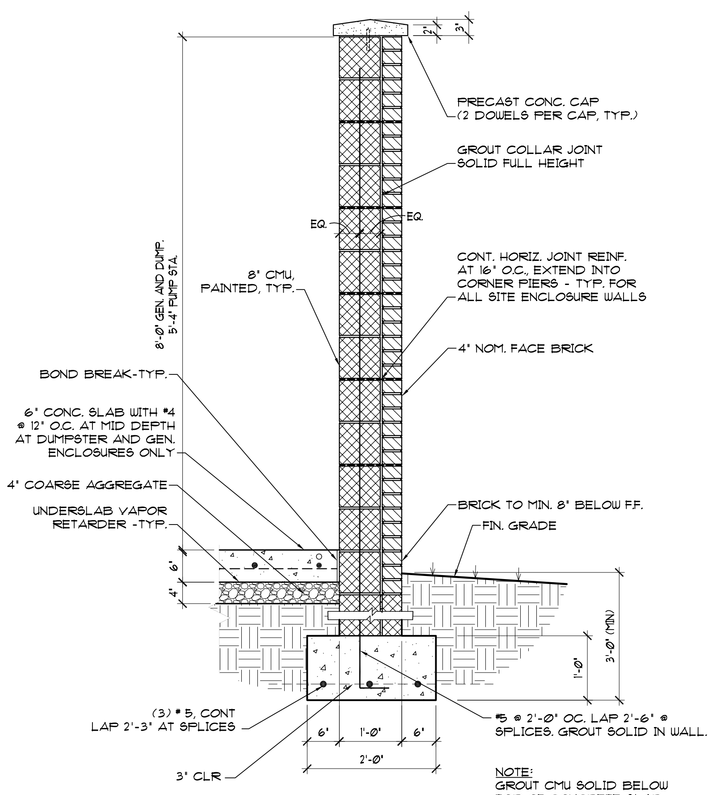

15 A1.5 A1.5 SITE STR. ENCL. TYP. WALL SECTION

SCALE: 3/4" = 1'-0"

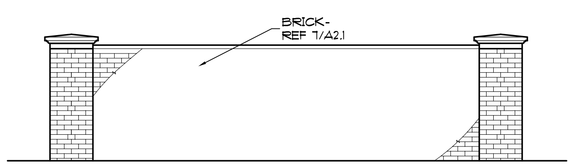

ELEV. L

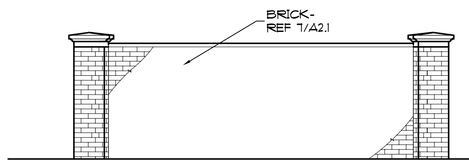

ELEV. K

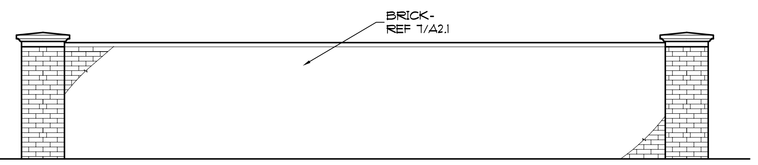

ELEV. I

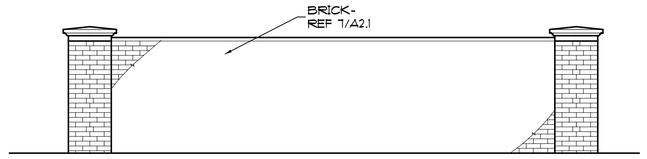

ELEV. J

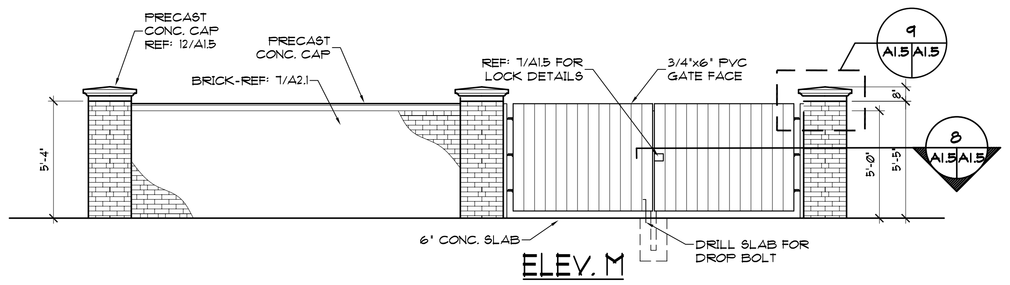

ELEV. M

6 A1.5 A1.5 PUMP STATION ENCLOSURE ELEVATIONS

SCALE: 1/4" = 1'-0"

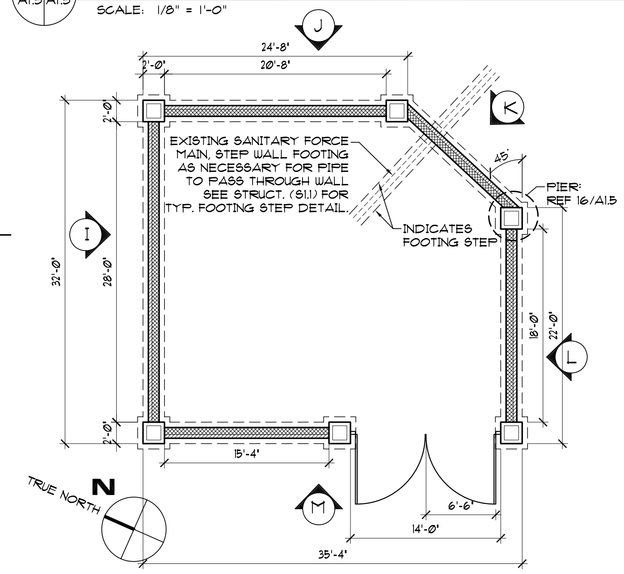

3 A1.5 A1.5 PUMP STA. ENCLOSURE PLAN

SCALE: 1/8" = 1'-0"

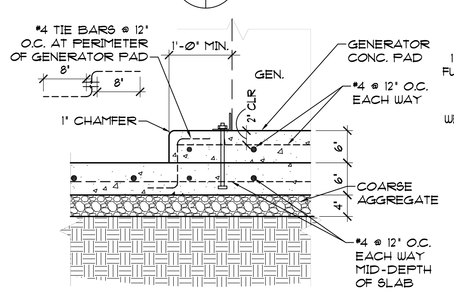

GENERATOR CONC. PAD SECTION

17 A1.5 A1.5

SCALE: 3/4" = 1'-0"

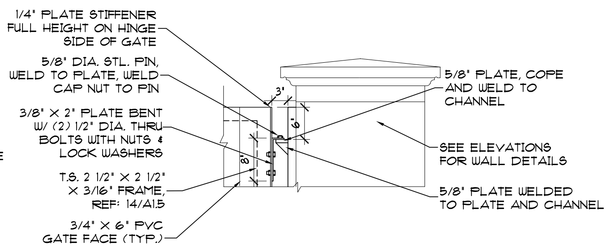

9 A1.5 A1.5 GEN. & PUMP STA. GATE DETAIL

SCALE: 3/4" = 1'-0"

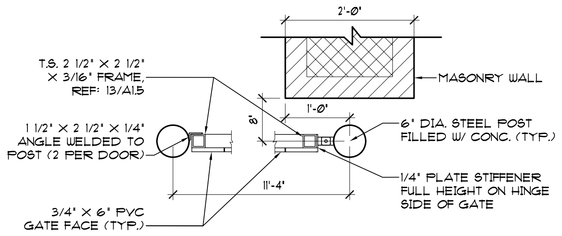

11 A1.5 A1.5 DUMPSTER GATE DETAIL

SCALE: 3/4" = 1'-0"

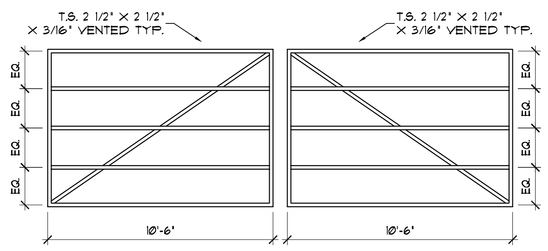

13 A1.5 A1.5 DUMPSTER GATE REINF.

SCALE: 1/4" = 1'-0"

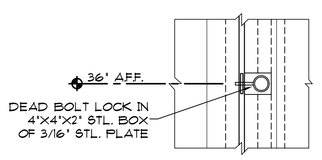

7 A1.5 A1.5 GEN. & PUMP STA. LOCK DTL.

SCALE: 3/4" = 1'-0"

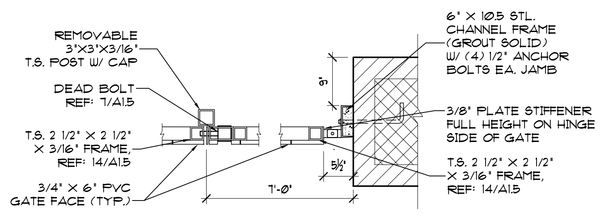

8 A1.5 A1.5 GEN. & PUMP STA. GATE DETAIL

SCALE: 3/4" = 1'-0"

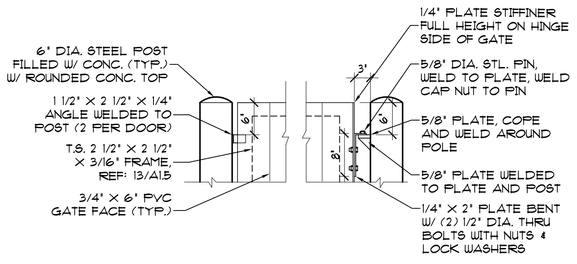

10 A1.5 A1.5 DUMPSTER GATE DETAIL

SCALE: 3/4" = 1'-0"

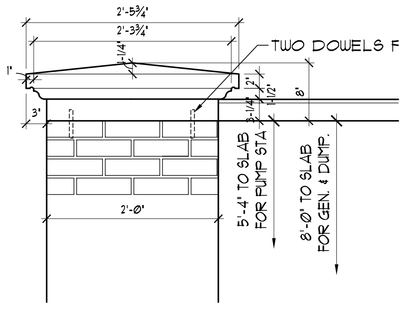

12 A1.5 A1.5 TYP. PRECAST POST CAP

SCALE: 1" = 1'-0"

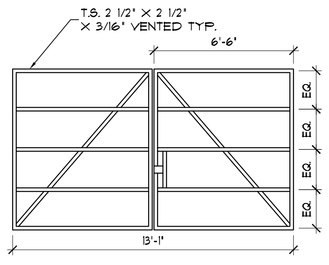

14 A1.5 A1.5 GEN. & PUMP STA. GATE REINF.

SCALE: 1/4" = 1'-0"

COMMONWEALTH OF VIRGINIA
James T. Rice
Certificate No. 3935
8/17/06
CERTIFIED ARCHITECT

VIRGINIA DEPT. OF TRANSPORTATION
FREDERICKSBURG SAFETY REST AREA AND WELCOME CENTER
I-95 SOUTH, FREDERICKSBURG, VIRGINIA

PROJECT CODE: 501-06501-007

Rawlings Wilson & Associates
ARCHITECTS PLANNERS
1100 NORTH THOMPSON STREET
RICHMOND, VIRGINIA 23230
(804) 358-9141 FAX(804) 359-5715

SHEET TITLE: SITE STRUCTURES

DRAWN	MMC
CHECKED	EJR
RWA NO.	1890.01
DATE	8/17/06

DRAWING NO. A1.5

SHEET ___ OF ___

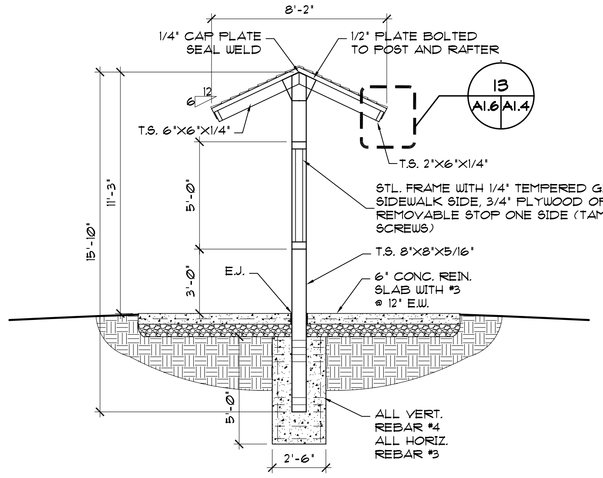

7 MAP KIOSK SECTION

A1.6 A1.6 SCALE: 1/4" = 1'-0"

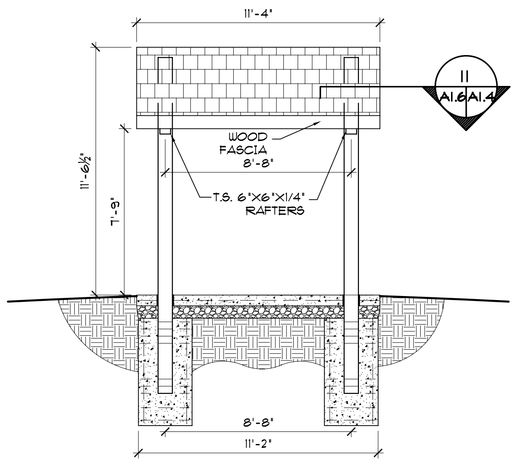

8 MAP KIOSK SECTION

A1.6 A1.6 SCALE: 1/4" = 1'-0"

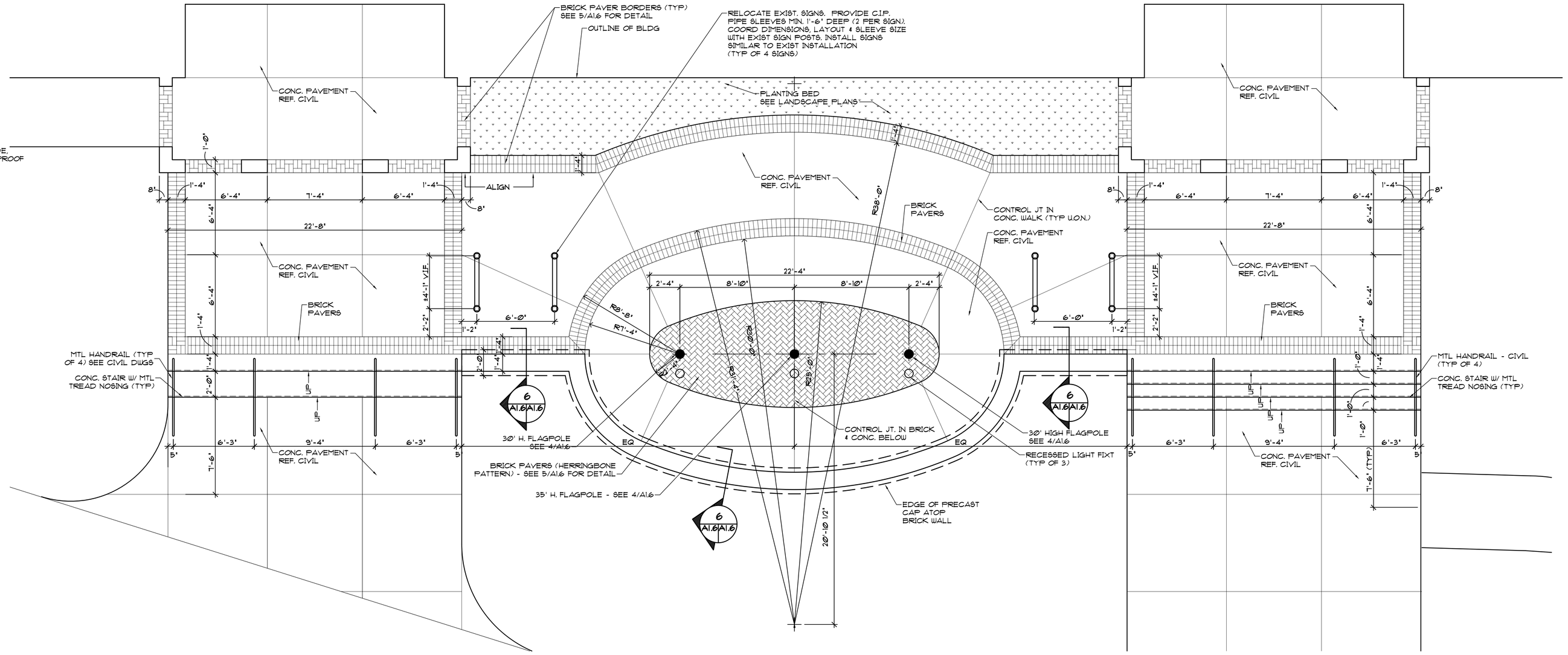

1 PLAZA LAYOUT PLAN

A1.1 A1.6 SCALE: 1/4" = 1'-0"

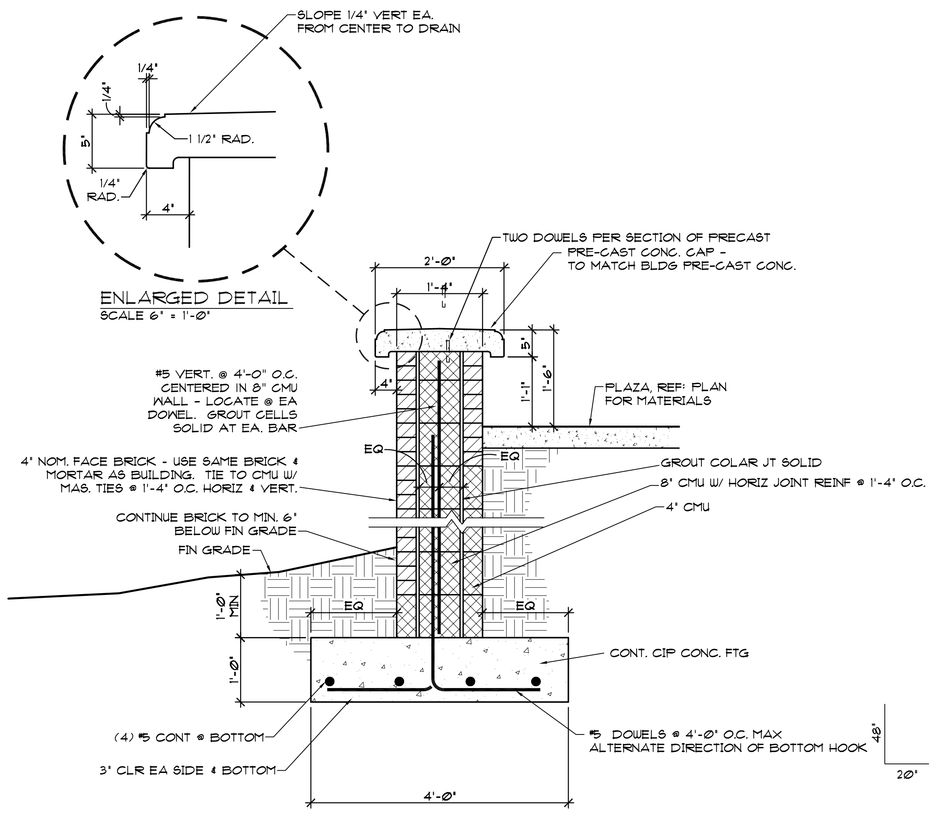

6 SECTION @ PLAZA WALL

A1.6 A1.6 SCALE: 3/4" = 1'-0"

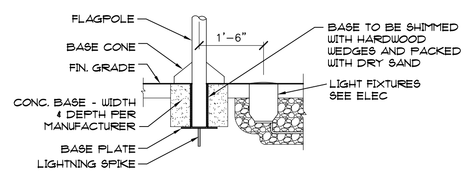

4 FLAGPOLE DETAIL

A1.6 A1.6 SCALE: 1/2" = 1'-0"

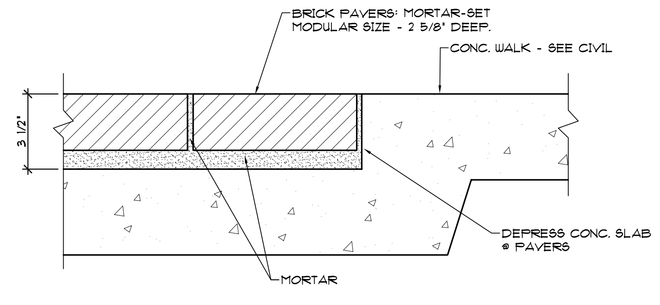

5 TYP. BRICK PAVER DETAIL

A1.6 A1.6 SCALE: 3" = 1'-0"

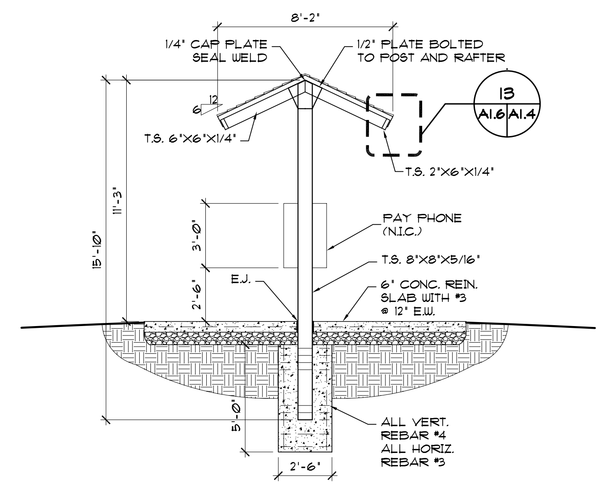

2 PHONE SHELTER SECTION

A1.6 A1.6 SCALE: 1/4" = 1'-0"

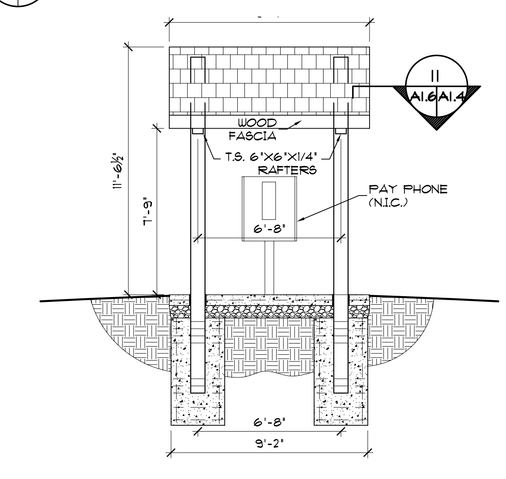

3 PHONE SHELTER SECTION

A1.6 A1.6 SCALE: 1/4" = 1'-0"

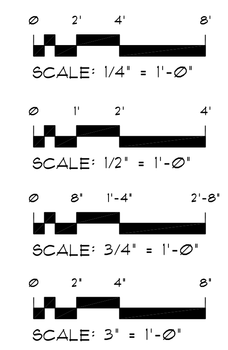

COMMONWEALTH OF VIRGINIA
James T. Rice
Certificate No. 3935
8/17/06
CERTIFIED ARCHITECT

VIRGINIA DEPT. OF TRANSPORTATION
FREDERICKSBURG SAFETY REST AREA AND WELCOME CENTER
I-95 SOUTH, FREDERICKSBURG, VIRGINIA
PROJECT CODE: 501-06501-007

Rawlings Wilson & Associates
ARCHITECTS PLANNERS
1100 NORTH THOMPSON STREET
RICHMOND, VIRGINIA 23230
(804) 358-9141 FAX(804) 359-5715

SHEET TITLE: PLAZA LAYOUT & DETAILS

DRAWN
CHECKED
RWA NO. 189001
DATE 8/17/06

DRAWING NO. A1.6
SHEET ___ OF ___

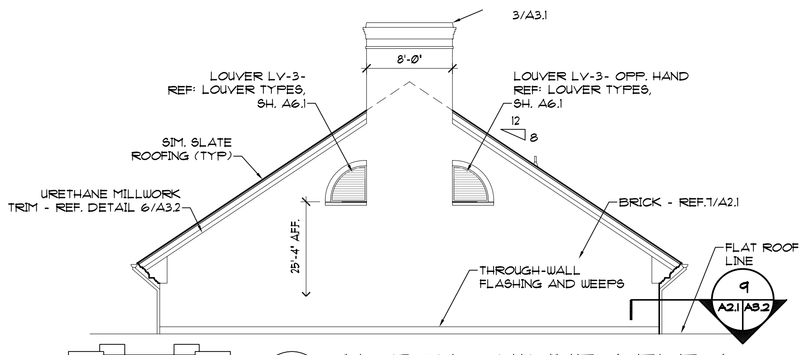

5 A1.1 A2.1 NORTH CHIMNEY ELEV.

SCALE: 1/8" = 1'-0"

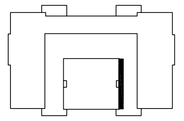

KEY PLAN

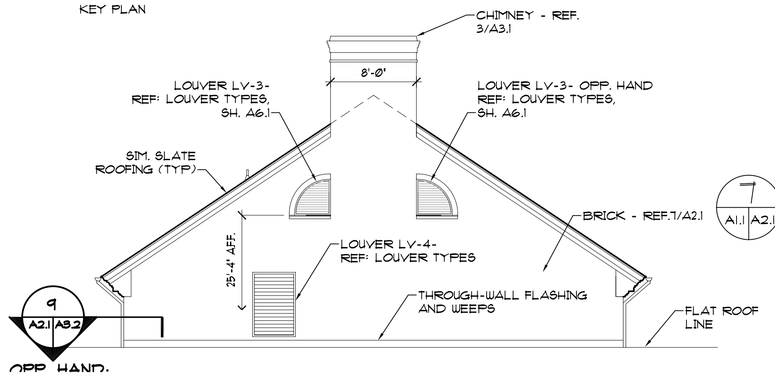

6 A1.1 A2.1 SOUTH CHIMNEY ELEV.

SCALE: 1/8" = 1'-0"

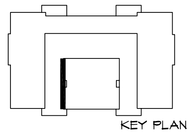

KEY PLAN

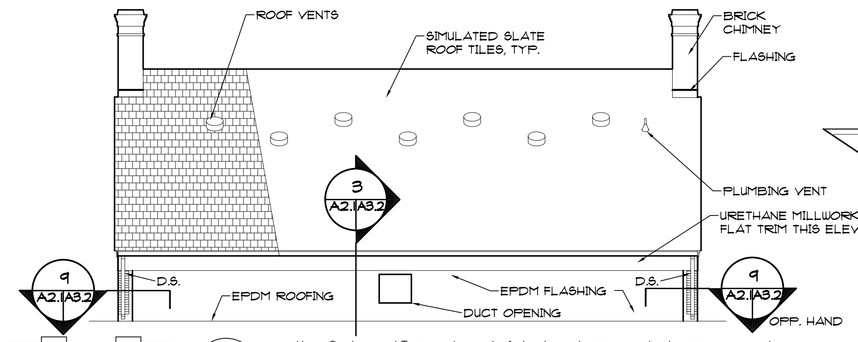

12 A1.1 A2.1 WEST HIGH WALL FROM ROOF

SCALE: 1/8" = 1'-0"

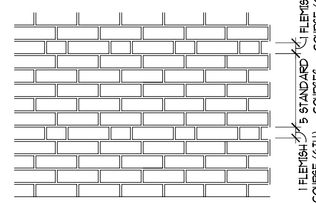

7 A1.1 A2.1 TYPICAL BRICK PATTERN "B"

SCALE: 3/4" = 1'-0"

RUNNING BOND W/ FELMISH VARIATION
NOTE: FRONT (EAST) ELEVATION OF BUILDING AND PORTICOS ON THIS SIDE TO BE LAID IN FLEMISH BOND. REMAINDER TO BE VARIATION SHOWN ABOVE.

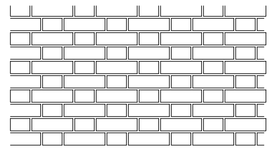

11 A1.1 A2.1 BRICK PATTERN "A"

SCALE: 3/4" = 1'-0"

FLEMISH BOND - ONLY FOR EAST (FRONT) ELEVATION AND FRONT PORTICOS

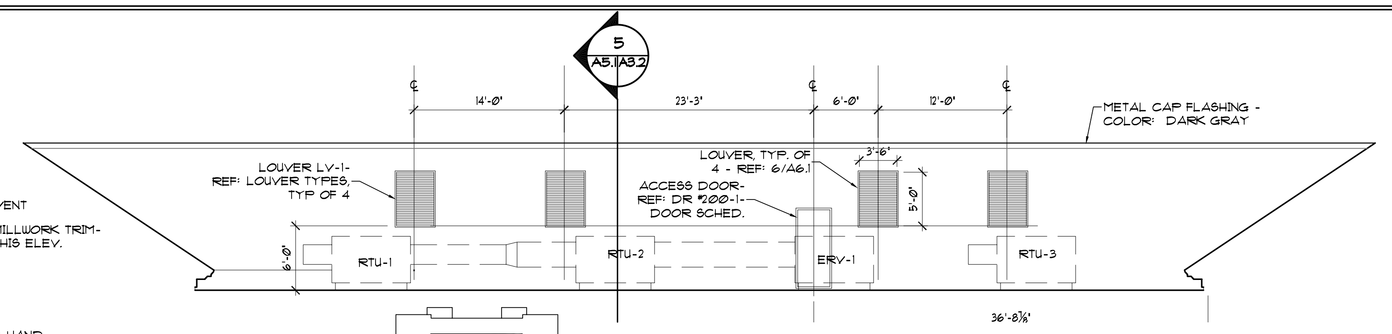

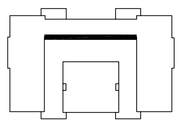

10 A1.1 A2.1 EAST VERTICAL WALL ELEVATION

SCALE: 1/8" = 1'-0"

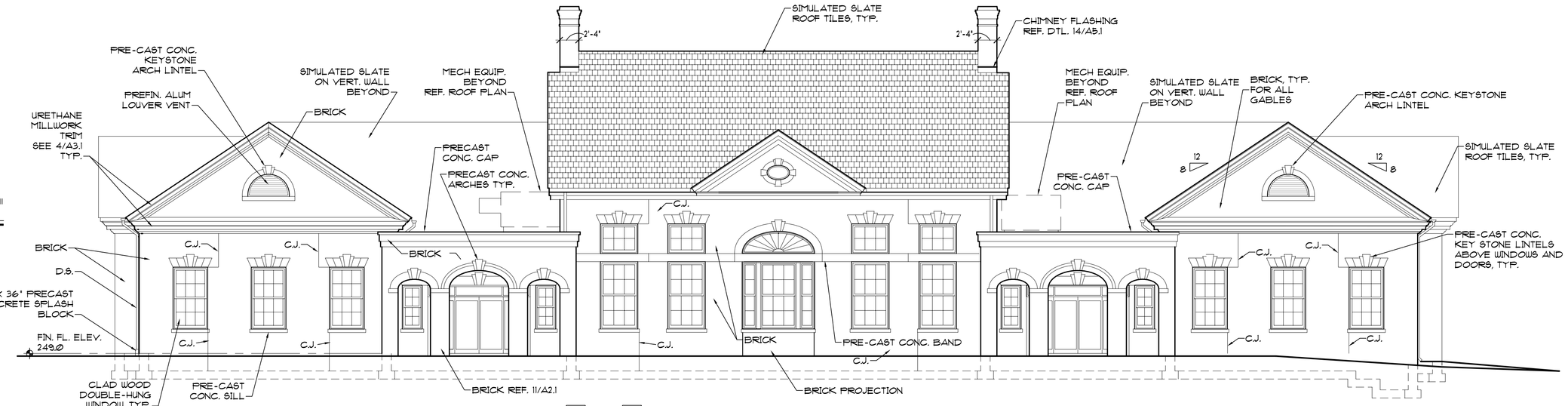

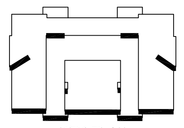

KEY PLAN

1 A1.1 A2.1 EAST ELEVATION

SCALE: 1/8" = 1'-0" BRICK: FLEMISH BOND, REF: 11/A2.1

PERCENT GLAZING
TOTAL EXTERIOR WALL AREA = 11,190.5 SQFT
TOTAL EXTERIOR GLAZING AREA = 1,803.8 SQFT
% GLAZING = 16.12%

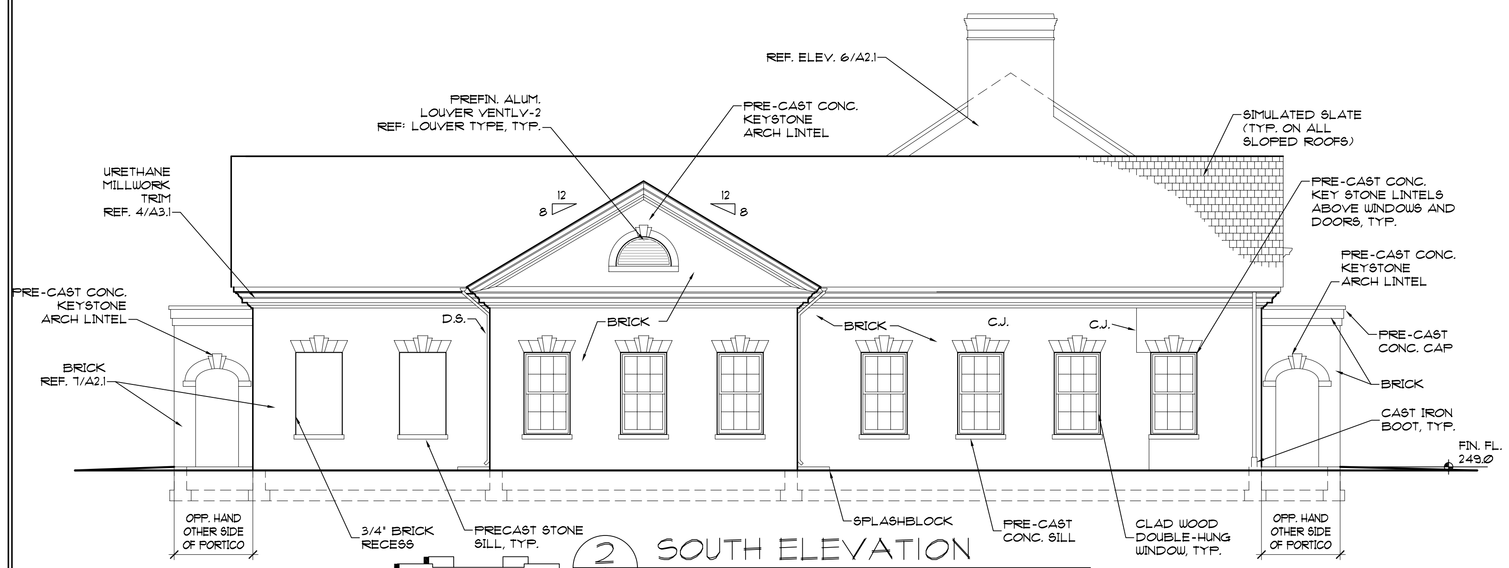

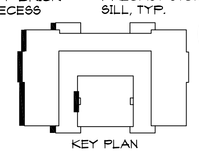

KEY PLAN

2 A1.1 A2.1 SOUTH ELEVATION

SCALE: 1/8" = 1'-0"

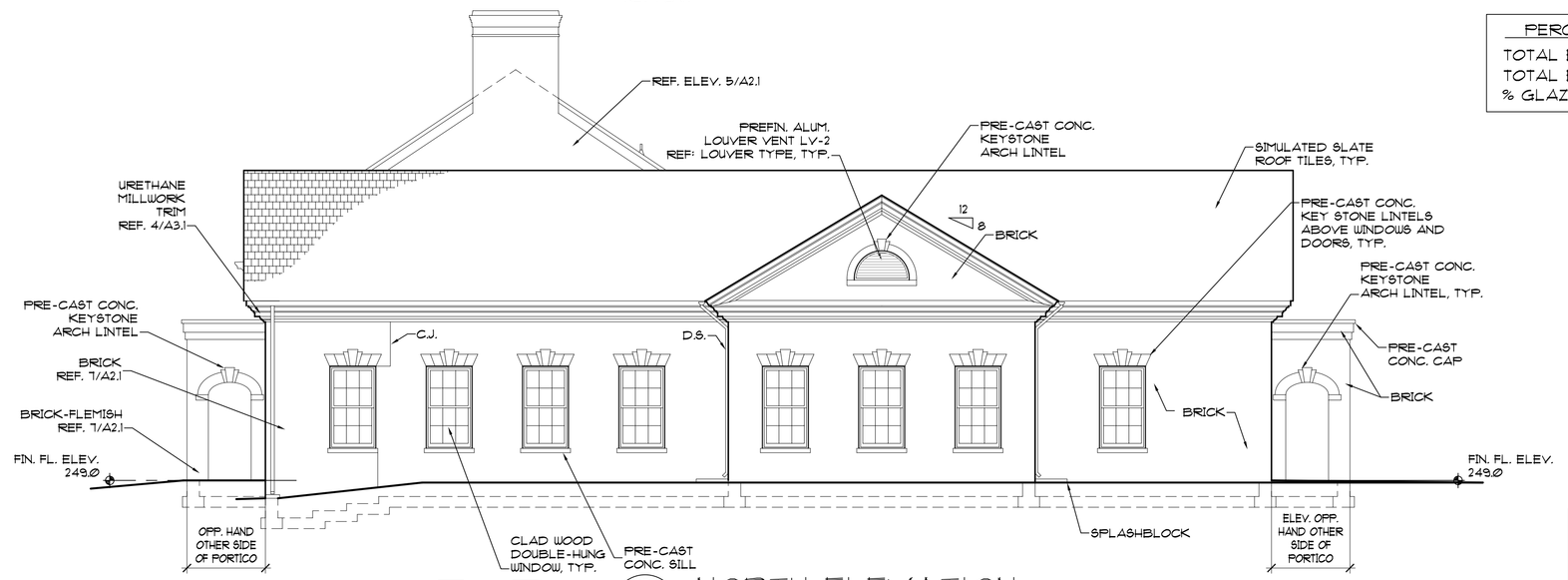

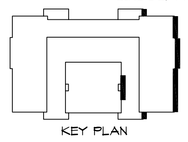

KEY PLAN

3 A1.1 A2.1 NORTH ELEVATION

SCALE: 1/8" = 1'-0"

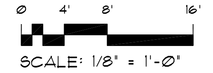

SCALE: 1/8" = 1'-0"

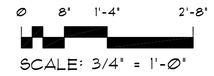

SCALE: 3/4" = 1'-0"

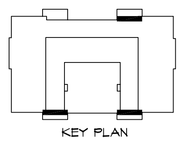

KEY PLAN

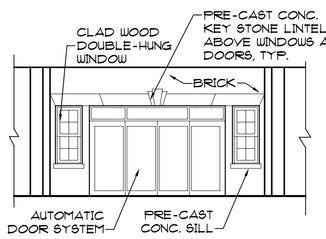

8 A1.1 A2.1 TYPICAL ELEV. INSIDE PORTICO

SCALE: 1/8" = 1'-0"

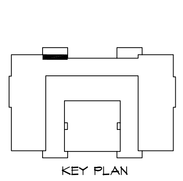

KEY PLAN

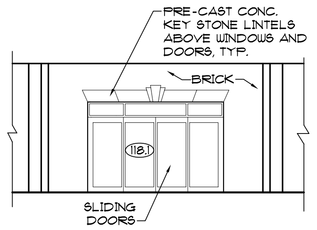

9 A1.1 A2.1 SOUTHWEST ENTRANCE ELEVATION

SCALE: 1/8" = 1'-0"

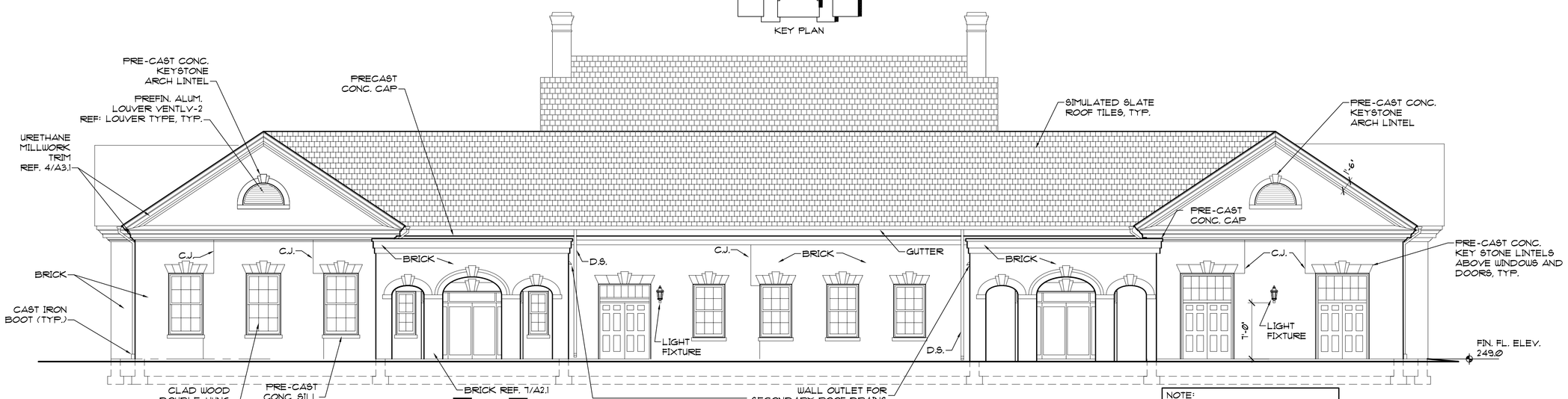

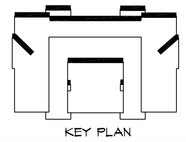

KEY PLAN

4 A1.1 A2.1 WEST ELEVATION

SCALE: 1/8" = 1'-0"

NOTE:
REFERENCE A1.1 FOR WINDOW INDICATIONS, A6.2 FOR WINDOW SCHEDULE AND PRECAST LINTELS AND ARCHES.

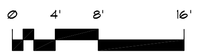

COMMONWEALTH OF VIRGINIA
James T. Rice
Certificate No. 3835
8/17/06
CERTIFIED ARCHITECT

VIRGINIA DEPT. OF TRANSPORTATION
FREDERICKSBURG SAFETY REST
AREA AND WELCOME CENTER
I-95 SOUTH, FREDERICKSBURG, VIRGINIA
PROJECT CODE: 501-06501-007

Rawlings Wilson & Associates
ARCHITECTS PLANNERS
1100 NORTH THOMPSON STREET
RICHMOND, VIRGINIA 23230
(804) 358-9141 FAX(804) 359-5715

SHEET TITLE ELEVATIONS

DRAWN	TMC
CHECKED	EJR
RWA NO.	1890.01
DATE	8/17/06

DRAWING NO. A2.1
SHEET ___ OF ___

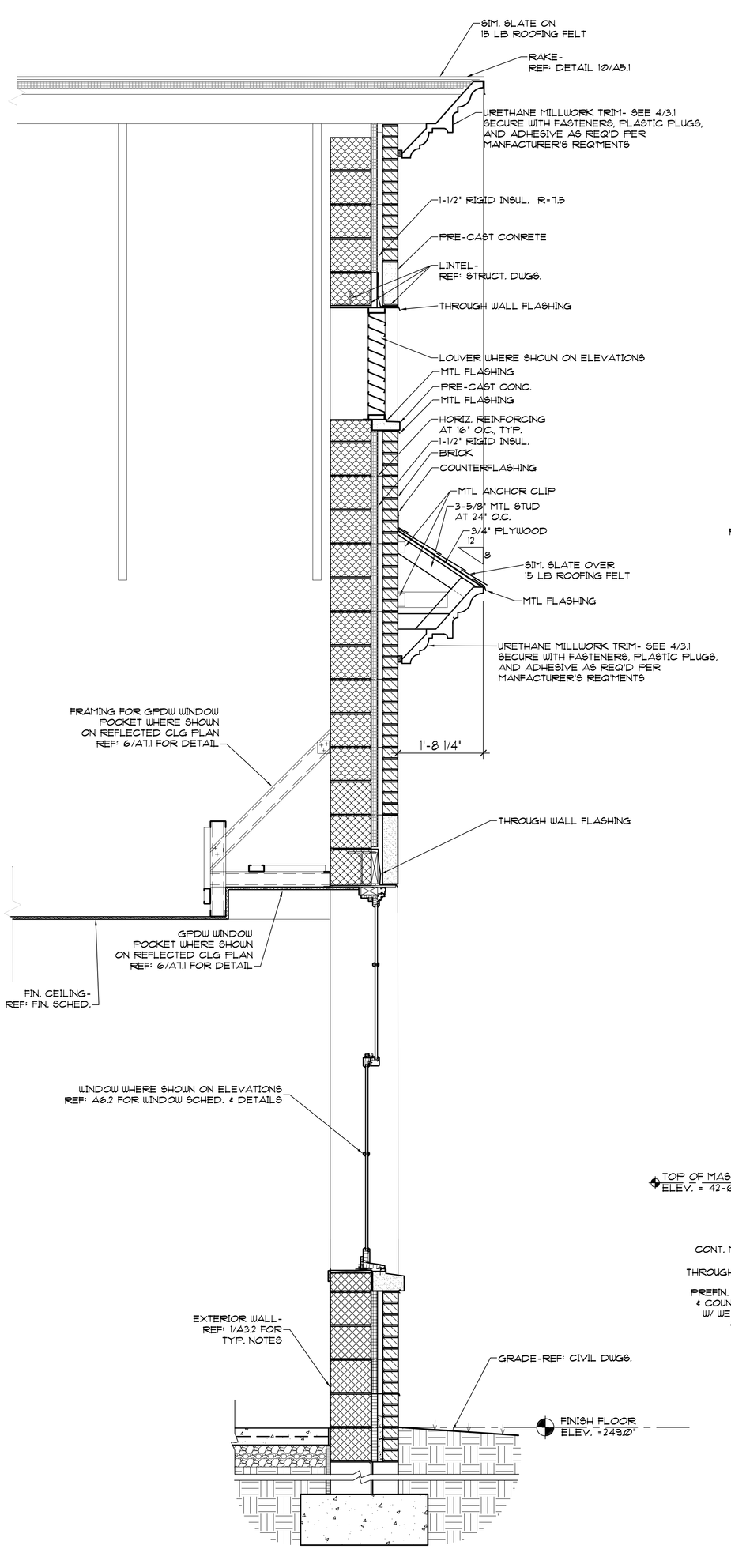

1 A1.1 A3.1 WALL SECTION

SCALE: 3/4" = 1'-0"

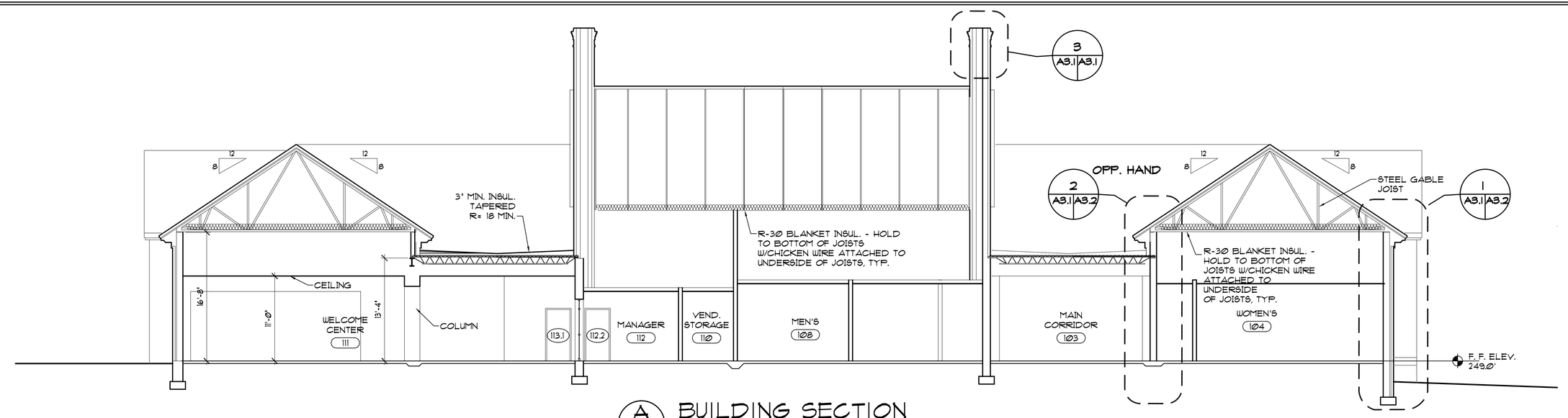

A A1.1 A3.1 BUILDING SECTION

SCALE: 1/8" = 1'-0" FOR INTERIOR ELEVATIONS REF: A4.3 & A4.4

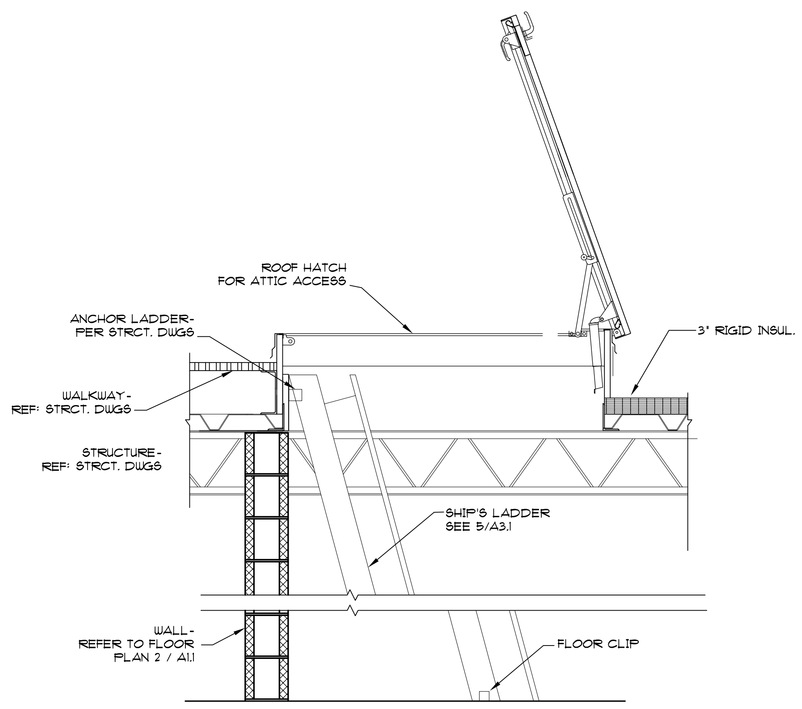

2 A1.1 A3.1 ATTIC ACCESS - ROOM 123

SCALE: 3/4" = 1'-0" HATCH AND SHIP'S LADDER

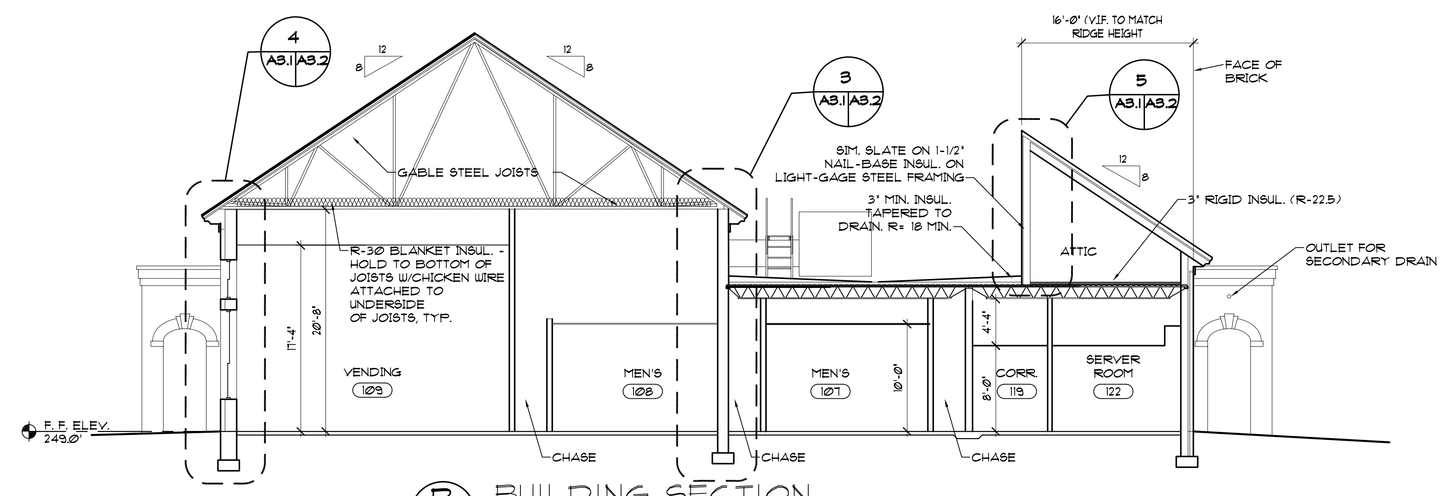

B A1.1 A3.1 BUILDING SECTION

SCALE: 1/8" = 1'-0"

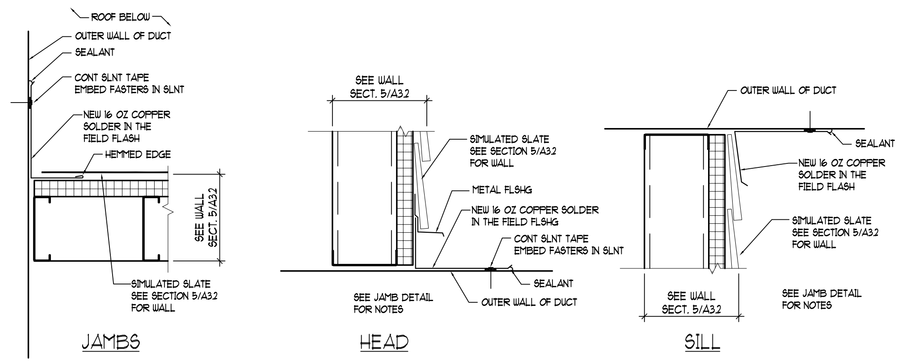

7 A5.1 A3.1 DUCT-WALL PENETRATION DET.

SCALE: 1 1/2" = 1'-0"

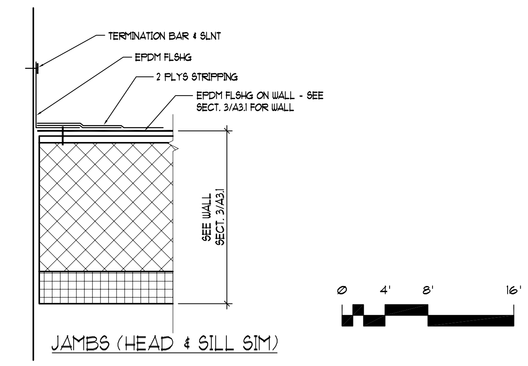

6 A5.1 A3.1 DUCT-WALL PENETRATION DET.

SCALE: 1 1/2" = 1'-0"

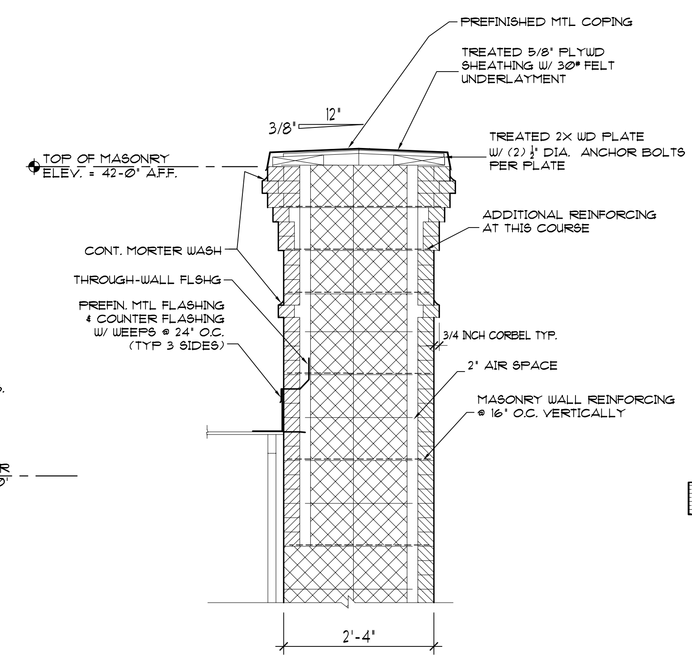

3 A1.1 A3.1 CHIMNEY SECTION

SCALE: 3/4" = 1'-0"

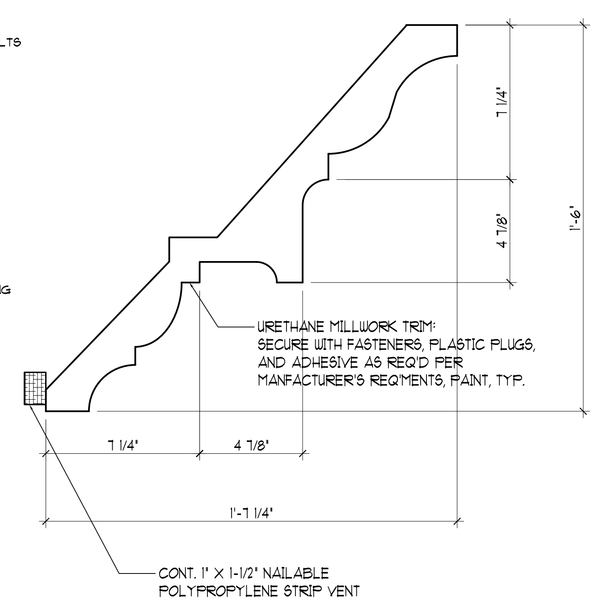

4 A2.1 A3.1 URETHANE TRIM DET.

SCALE: 3" = 1'-0" TYP. UNLESS OTHERWISE NOTED

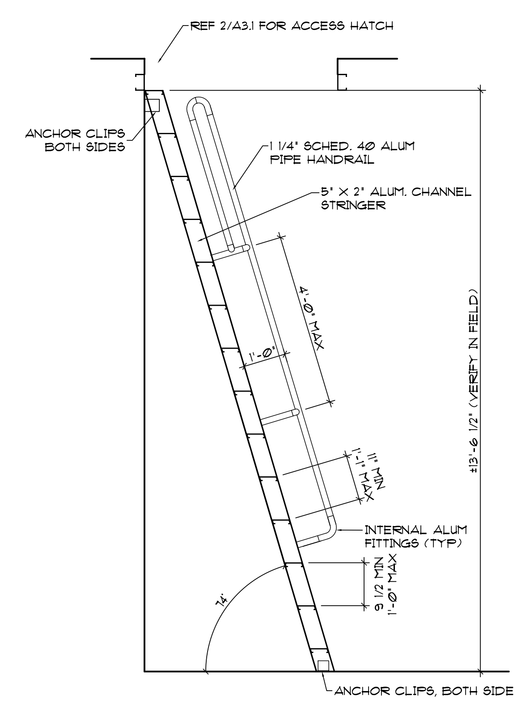

5 A3.1 A3.1 SHIP'S LADDER DETAILS

SCALE: 1/2" = 1'-0"

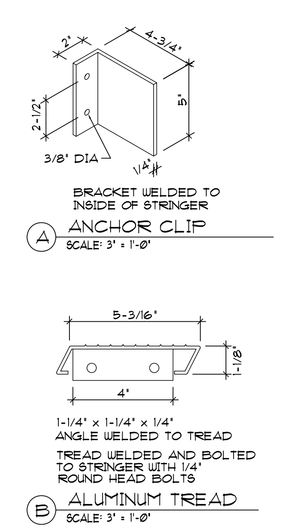

COMMONWEALTH OF VIRGINIA
James T. Rice
Certificate No.
3935
8/17/06
CERTIFIED ARCHITECT

VIRGINIA DEPT. OF TRANSPORTATION
FREDERICKSBURG SAFETY REST
AREA AND WELCOME CENTER
I-95 SOUTH, FREDERICKSBURG, VIRGINIA

PROJECT CODE: 501-06501-007

Rawlings Wilson & Associates
ARCHITECTS PLANNERS
1100 NORTH THOMPSON STREET
RICHMOND, VIRGINIA 23230
(804) 358-9141 FAX(804) 359-5715

SHEET TITLE: SECTIONS

DRAWN	EJR, TMC
CHECKED	EJR
RWA NO.	1880.01
DATE	8/17/06

DRAWING NO. A3.1

SHEET ___ OF ___

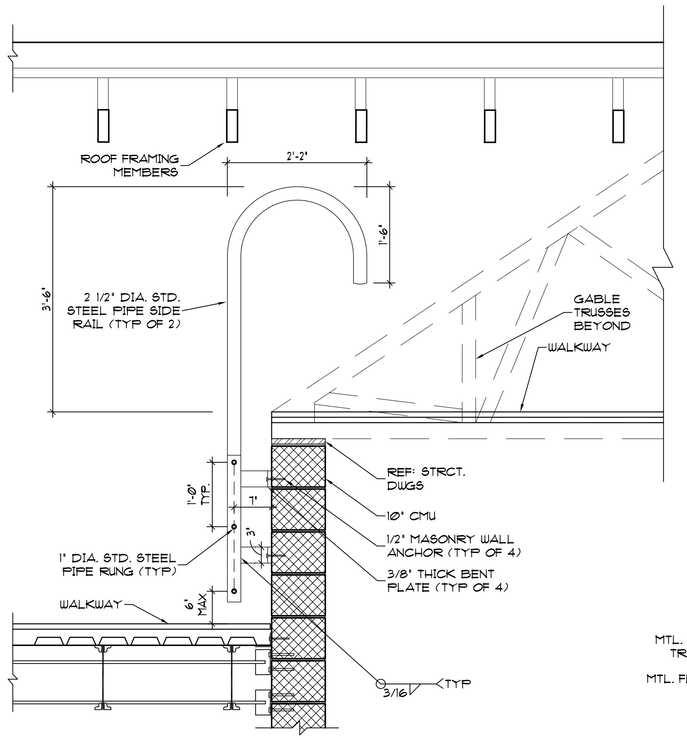

ATTIC WALKWAY TRANSITION LADDER

8 (S2.2 | A3.2) SCALE: 3/4" = 1'-0" (TYP OF 2)

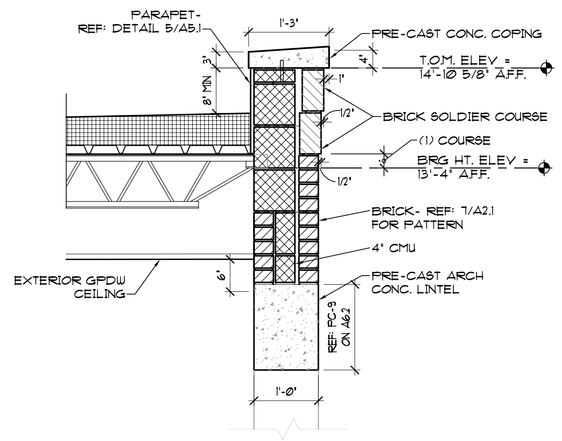

6 WALL SECTION

A1.1 | A3.2 SCALE: 3/4" = 1'-0"

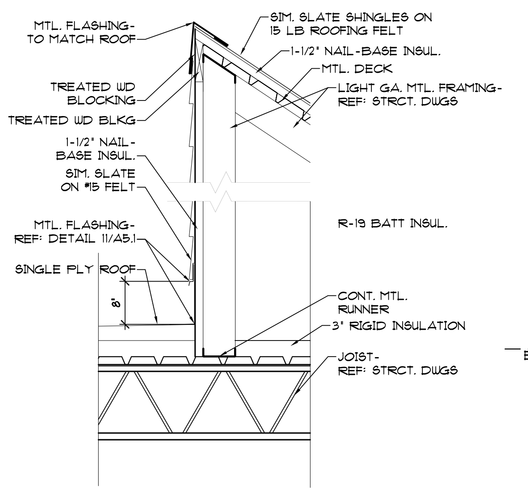

5 WALL SECTION

A3.1 | A3.2 SCALE: 3/4" = 1'-0"

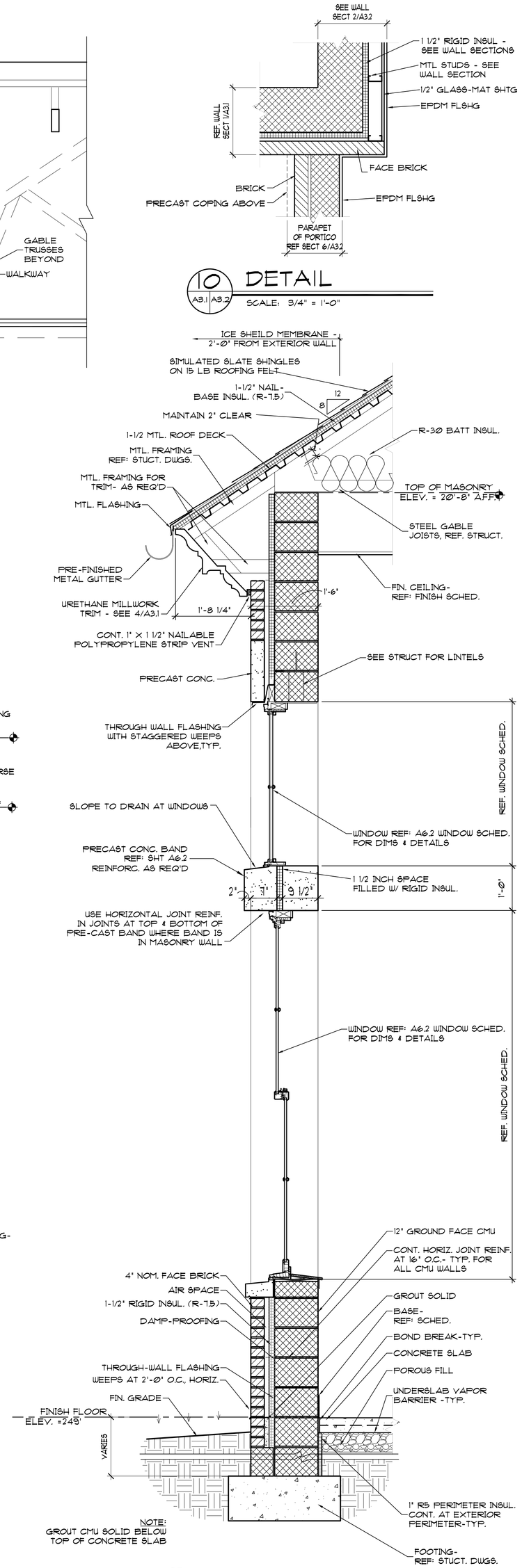

10 DETAIL

A3.1 | A3.2 SCALE: 3/4" = 1'-0"

4 WALL SECTION

A3.1 | A3.2 SCALE: 3/4" = 1'-0" FOR BANDING AT GROUND FACE CMU- REF: INTERIOR ELEVATIONS ON A4.2 AND A4.3

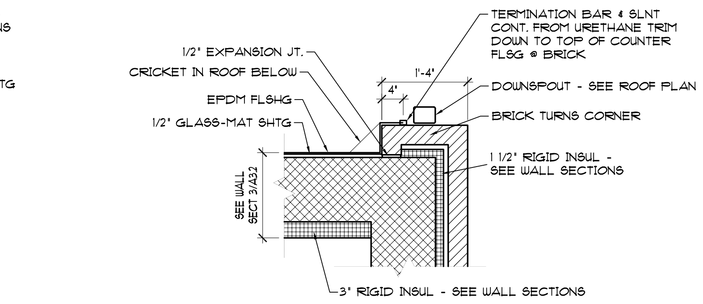

9 DETAIL

A3.1 | A3.2 SCALE: 3/4" = 1'-0"

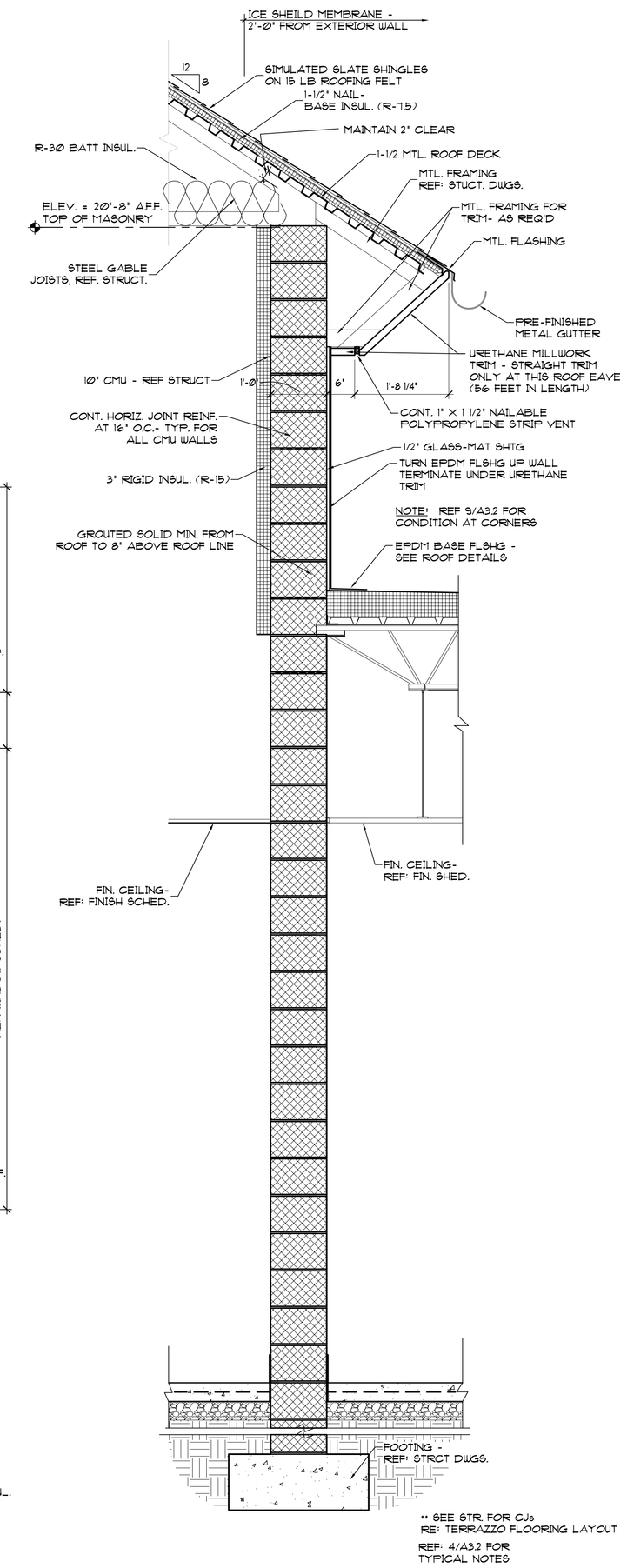

3 WALL SECTION

A3.1 | A3.2 SCALE: 3/4" = 1'-0"

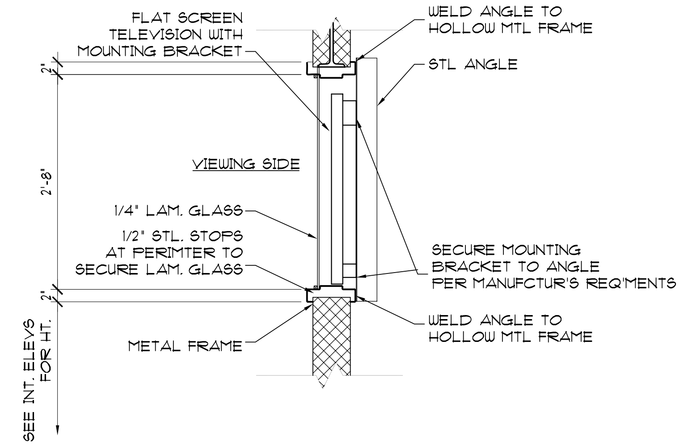

7 WALL RECESS

A1.1 | A3.2 SCALE: 3/4" = 1'-0" FOR FLAT SCREEN TV MONITORS

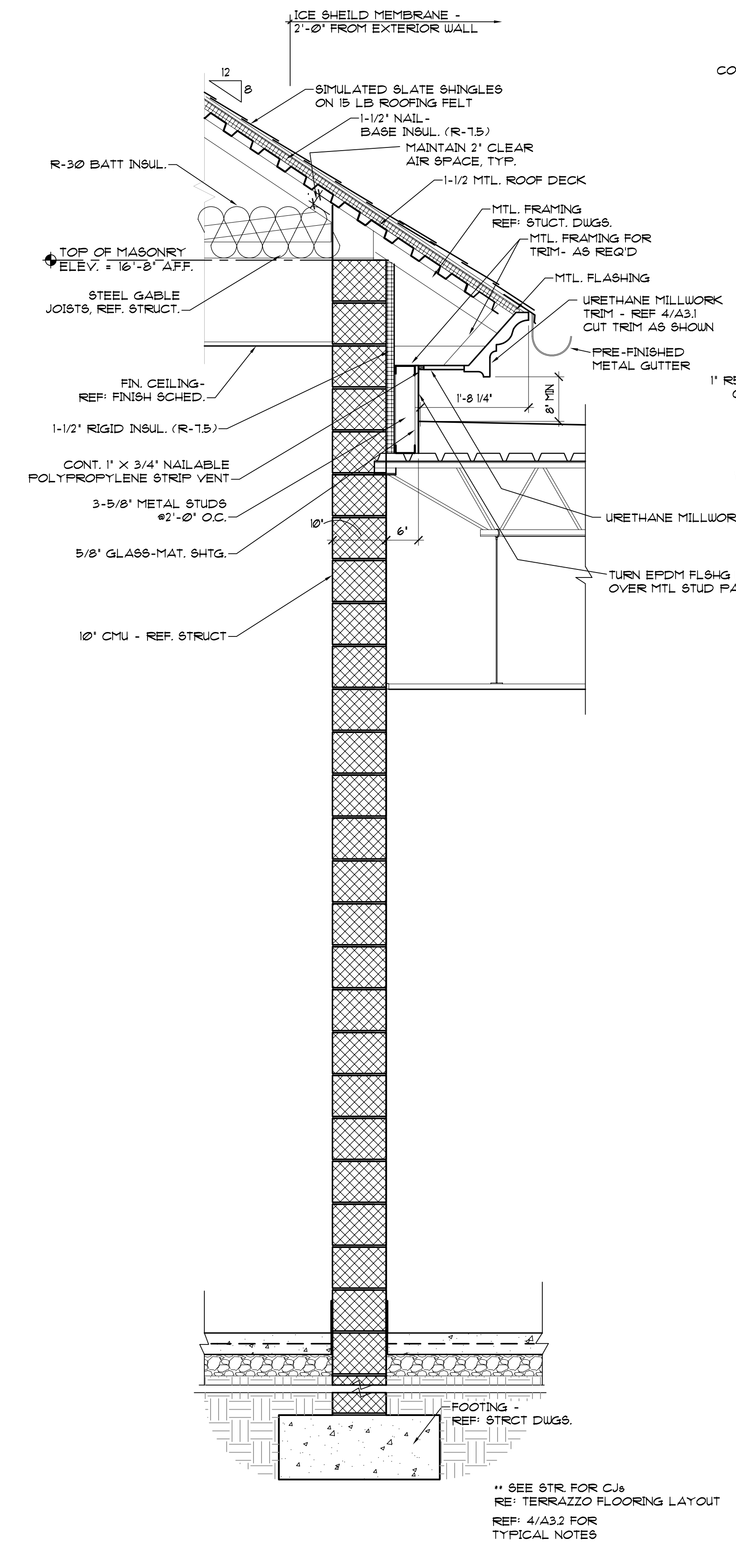

2 WALL SECTION

A3.1 | A3.2 SCALE: 3/4" = 1'-0"

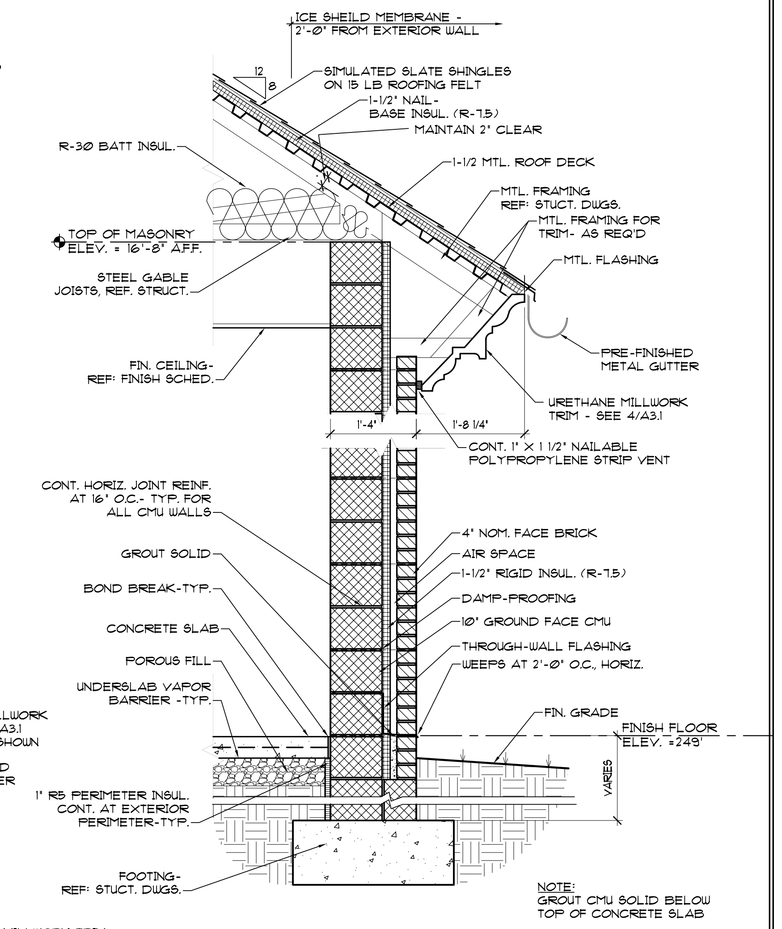

1 WALL SECTION

A3.1 | A3.2 SCALE: 3/4" = 1'-0"

0 8" 1'-4" 2'-8"

COMMONWEALTH OF VIRGINIA
James T. Rice
Certificate No. 3935
8/17/06
CERTIFIED ARCHITECT

VIRGINIA DEPT. OF TRANSPORTATION
FREDERICKSBURG SAFETY REST AREA AND WELCOME CENTER
I-95 SOUTH, FREDERICKSBURG, VIRGINIA

PROJECT CODE: 501-06501-007

Rawlings Wilson & Associates
ARCHITECTS PLANNERS
1100 NORTH THOMPSON STREET
RICHMOND, VIRGINIA 23230
(804) 358-9141 FAX(804) 359-5715

SHEET TITLE: WALL SECTIONS

DRAWN	EJR, TMC
CHECKED	EJR
RWA NO.	1890.01
DATE	8/17/06

DRAWING NO. A3.2

SHEET ___ OF ___

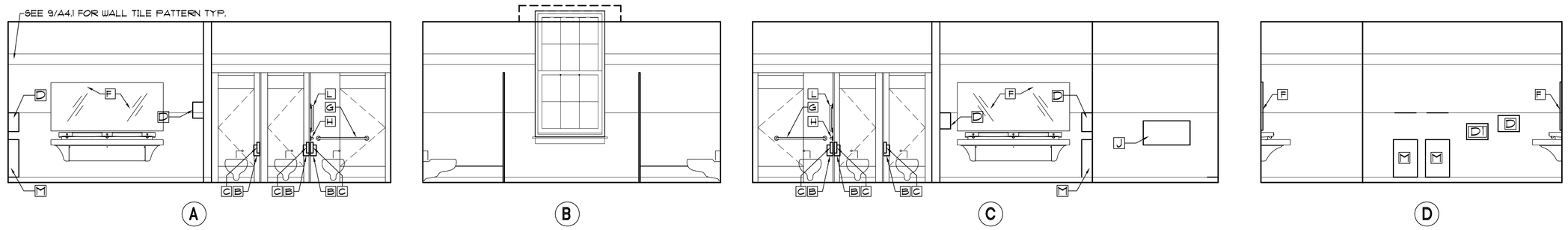

1 A1.2A4.1 TOILET ELEVATIONS AT WOMENS 104

SCALE: 1/4" = 1'-0" REF: A1.2 FOR ACCESSORY SCHEDULE

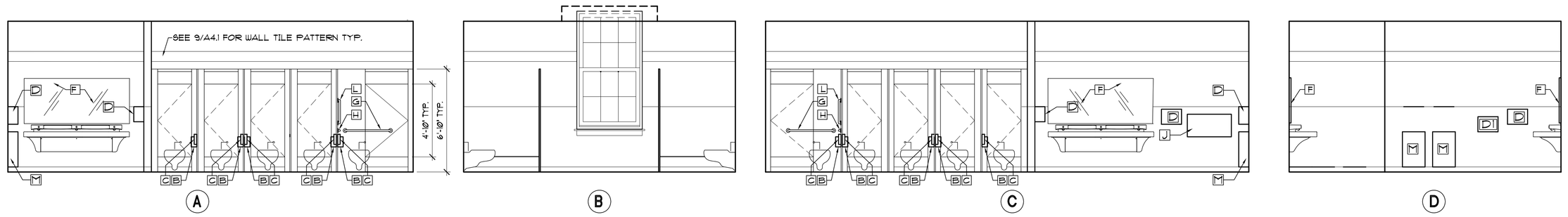

2 A1.2A4.1 TOILET ELEVATIONS AT WOMENS 105

SCALE: 1/4" = 1'-0" REF: A1.2 FOR ACCESSORY SCHEDULE

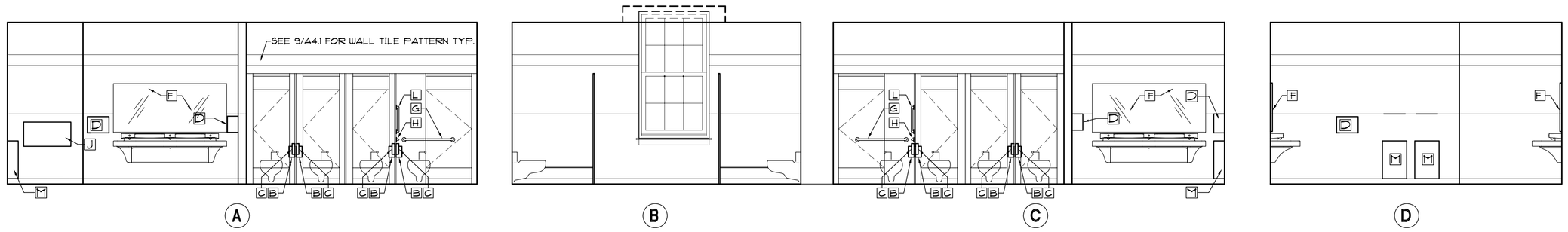

3 A1.2A4.1 TOILET ELEVATIONS AT WOMENS 106

SCALE: 1/4" = 1'-0" REF: A1.2 FOR ACCESSORY SCHEDULE

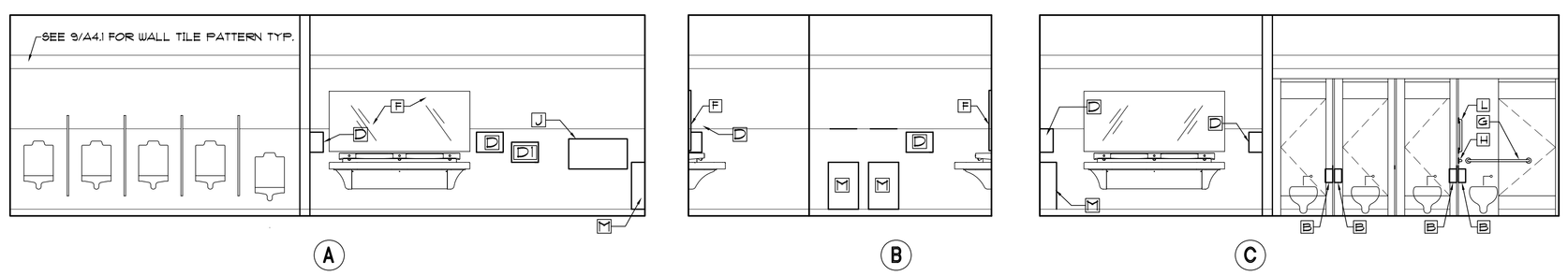

4 A1.2A4.1 TOILET ELEVATIONS AT MENS 107

SCALE: 1/4" = 1'-0" REF: A1.2 FOR ACCESSORY SCHEDULE

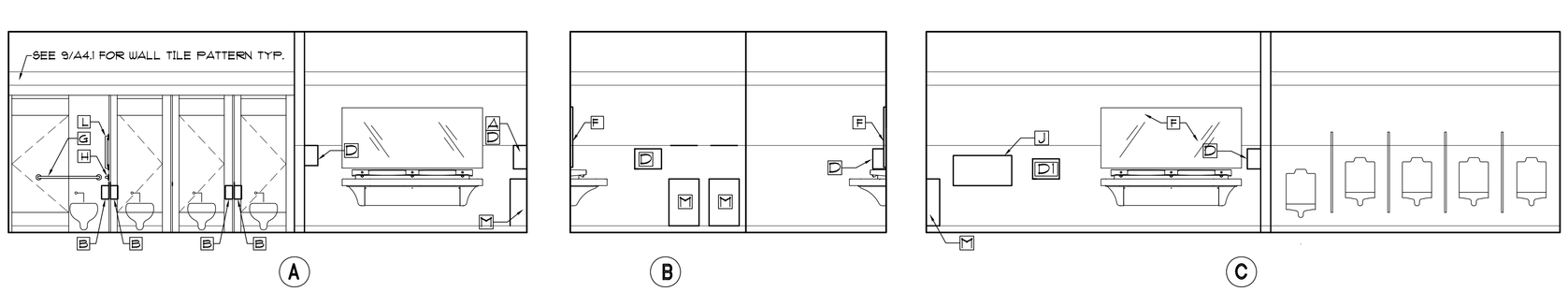

5 A1.2A4.1 TOILET ELEVATIONS AT MENS 108

SCALE: 1/4" = 1'-0" REF: A1.2 FOR ACCESSORY SCHEDULE

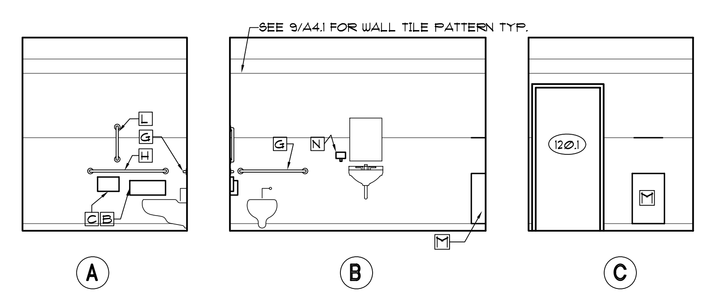

6 A1.2A4.1 TOILET ELEVATIONS AT STAFF 120

SCALE: 1/4" = 1'-0" REF: A1.2 FOR ACCESSORY SCHEDULE

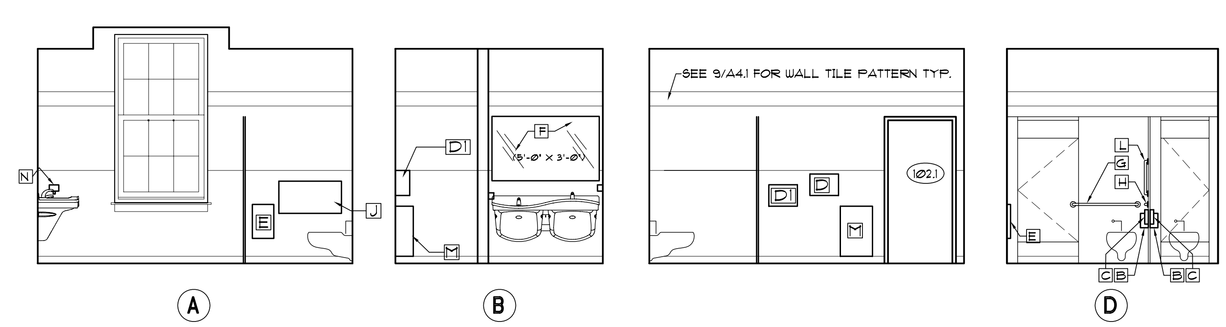

7 A1.2A4.1 TOILET ELEVATIONS AT MULTI-USE 102

SCALE: 1/4" = 1'-0" REF: A1.2 FOR ACCESSORY SCHEDULE

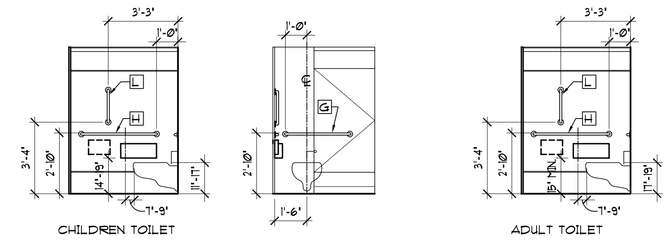

8 A1.2A4.1 TYPICAL ADA TOILETS

SCALE: 1/4" = 1'-0" REF: A1.2 FOR ACCESSORY SCHEDULE

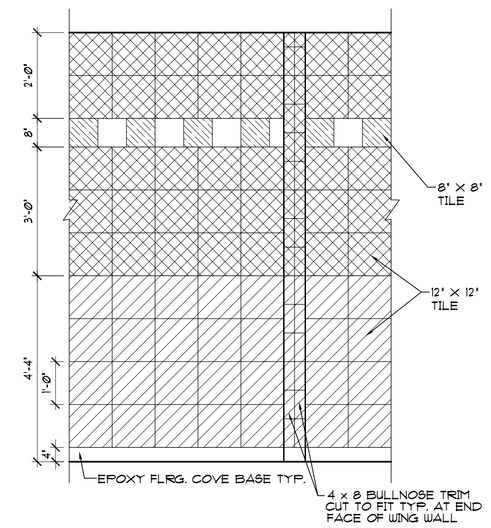

WALL TILE COLOR KEY

- COLOR 1, PRICE GROUP II
- COLOR 2, PRICE GROUP II
- COLOR 3, PRICE GROUP III
- COLOR 4, PRICE GROUP III

9 A1.2A4.1 TYP. WALL TILE PATTERN

SCALE: 1/2" = 1'-0"

SCALE: 1/4" = 1'-0"

SCALE: 1/2" = 1'-0"

COMMONWEALTH OF VIRGINIA
James T. Rice
Certificate No. 3835
8/17/06
CERTIFIED ARCHITECT

VIRGINIA DEPT. OF TRANSPORTATION
FREDERICKSBURG SAFETY REST AREA AND WELCOME CENTER
I-95 SOUTH, FREDERICKSBURG, VIRGINIA
PROJECT CODE: 501-06501-007

Rawlings Wilson & Associates
ARCHITECTS PLANNERS
1100 NORTH THOMPSON STREET
RICHMOND, VIRGINIA 23230
(804) 358-9141 FAX(804) 359-5715

SHEET TITLE: RESTROOM ELEVATIONS

DRAWN	TMC
CHECKED	EJR
RWA NO.	1890.01
DATE	8/17/06

DRAWING NO. A4.1

SHEET ___ OF ___

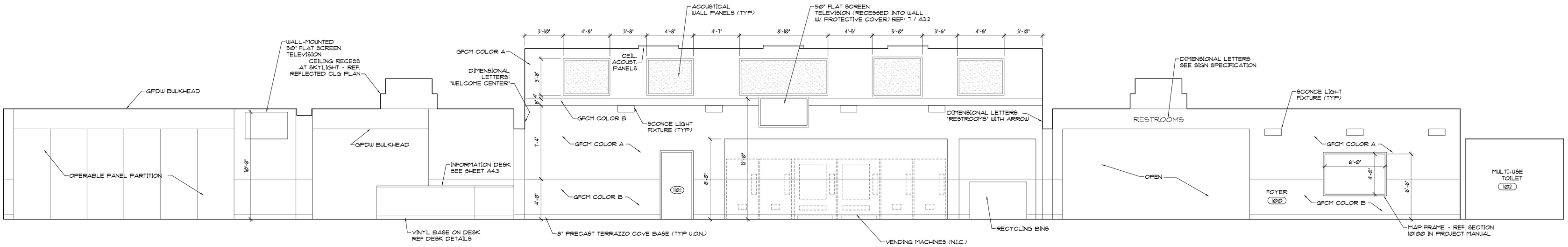

1 A1.1/A4.2 INTERIOR ELEVATION

SCALE: 1/4" = 1'-0"

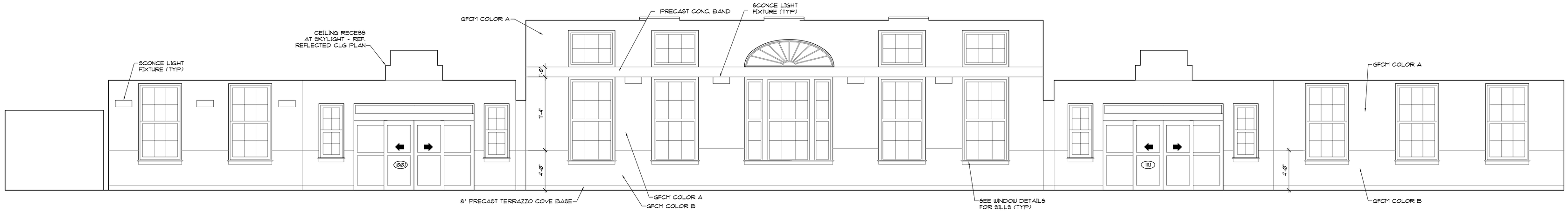

2 A1.1/A4.2 INTERIOR ELEVATION

SCALE: 1/4" = 1'-0"

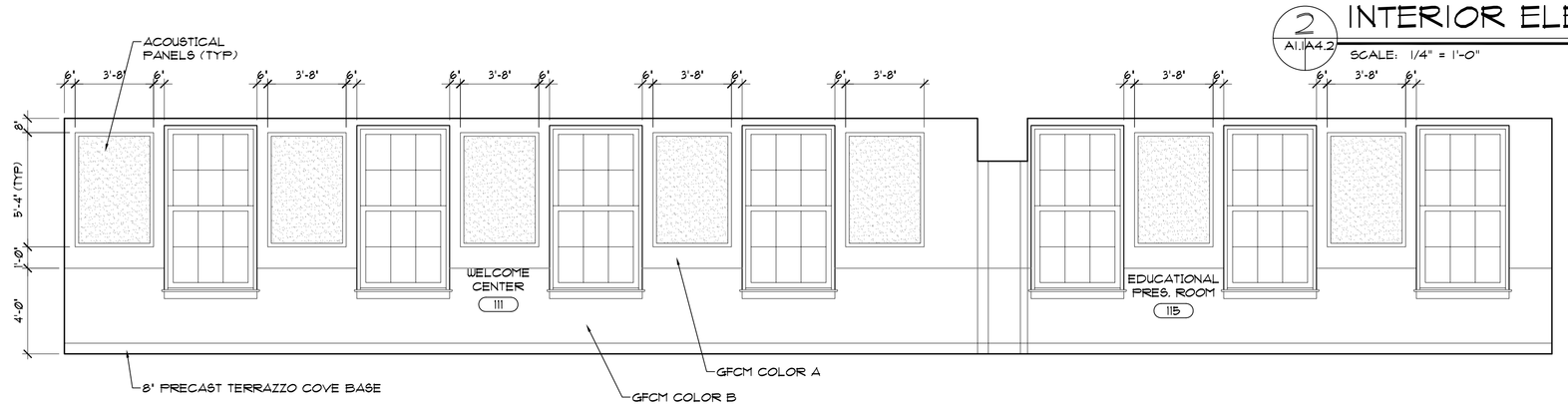

4 A1.1/A4.2 INTERIOR ELEVATION

SCALE: 1/4" = 1'-0" WELCOME CENTER EDUCATIONAL PRES. ROOM

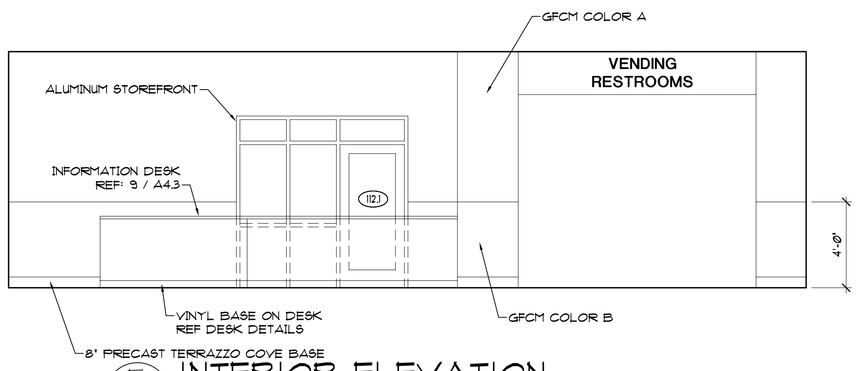

5 A1.1/A4.2 INTERIOR ELEVATION

SCALE: 1/4" = 1'-0" WELCOME CENTER

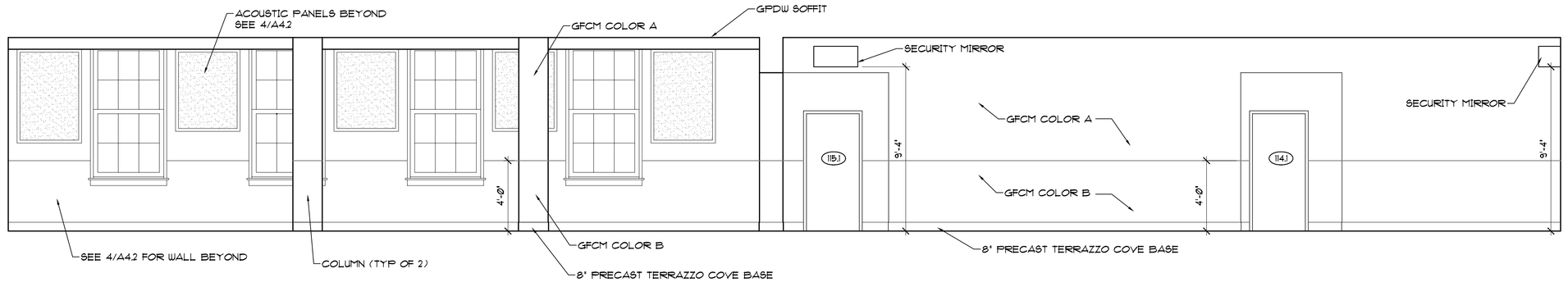

6 A1.1/A4.2 INTERIOR ELEVATION

SCALE: 1/4" = 1'-0" WELCOME CENTER, CORR. 114

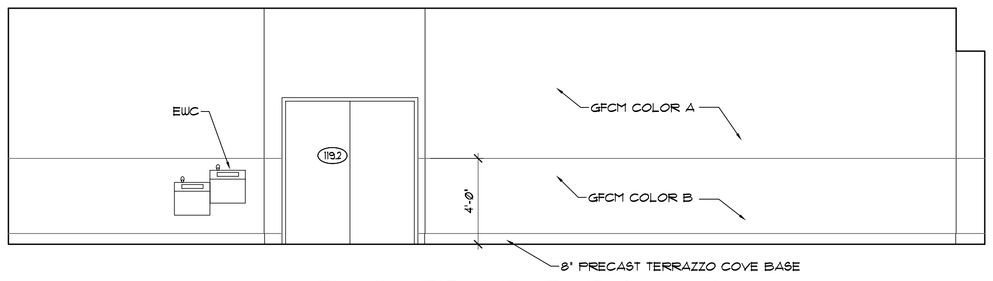

7 A1.1/A4.2 INTERIOR ELEVATION

SCALE: 1/4" = 1'-0" CORRIDOR 114

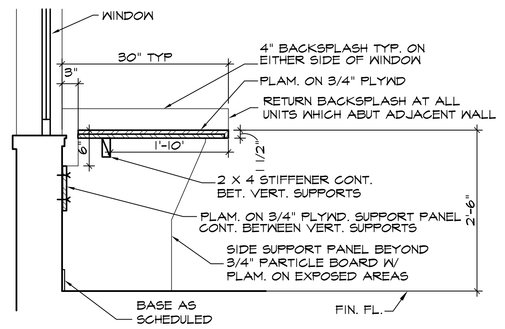

9 A4.3/A4.2 JANITOR'S DESK SECTION

SCALE: 3/4" = 1'-0"

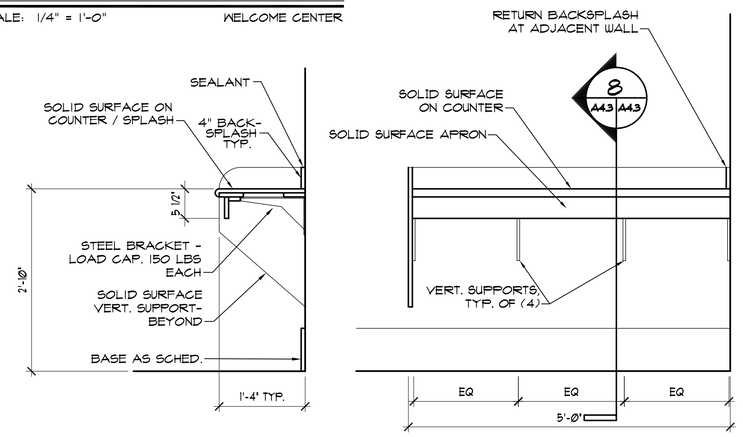

8 A1.1/A4.3 VENDING AREA COUNTER DETAIL

SCALE: 3/4" = 1'-0"

SCALE: 1/4" = 1'-0"

SCALE: 3/4" = 1'-0"

COMMONWEALTH OF VIRGINIA
James T. Rice
Certificate No. 19935
8/17/06
CERTIFIED ARCHITECT

VIRGINIA DEPT. OF TRANSPORTATION
FREDERICKSBURG SAFETY REST AREA AND WELCOME CENTER
I-95 SOUTH, FREDERICKSBURG, VIRGINIA

PROJECT CODE: 501-06501-007

Rawlings Wilson & Associates
ARCHITECTS PLANNERS
1100 NORTH THOMPSON STREET
RICHMOND, VIRGINIA 23230
(804) 358-9141 FAX(804) 359-5715

SHEET TITLE: INTERIOR ELEVATIONS

DRAWN	TMC
CHECKED	EJR
RWA NO.	1890.01
DATE	8/17/06

DRAWING NO. A4.2

SHEET ___ OF ___

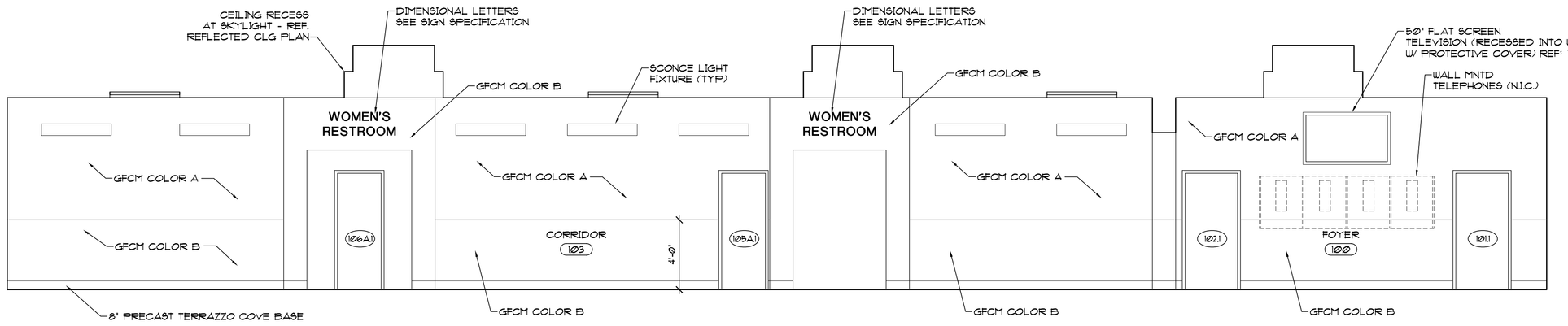

1 A1.1A4.3 INTERIOR ELEVATION

SCALE: 1/4" = 1'-0" CORRIDOR 103

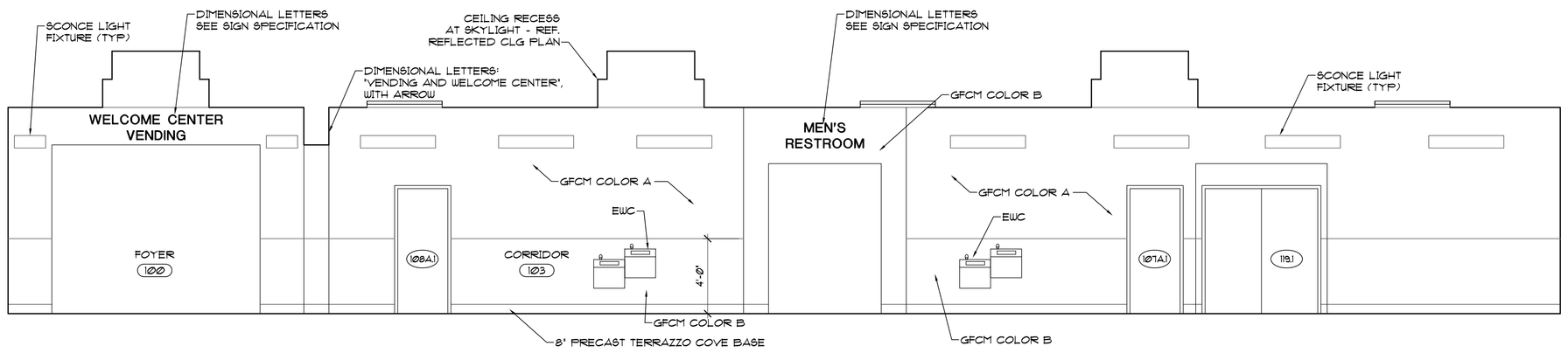

2 A1.1A4.3 INTERIOR ELEVATION

SCALE: 1/4" = 1'-0" CORRIDOR 103

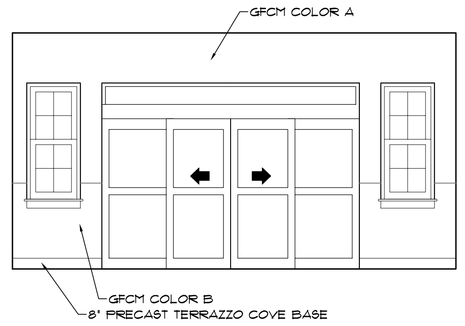

3 A1.1A4.3 INTERIOR ELEVATION

SCALE: 1/4" = 1'-0" CORRIDOR 103

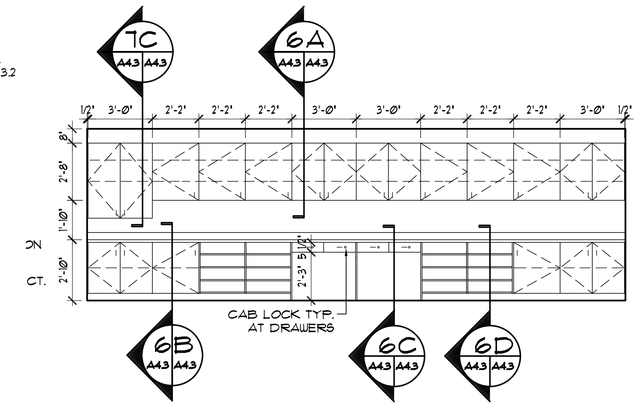

4 A1.1A4.3 LITERATURE STORAGE AREA ELEVATION

SCALE: 1/4" = 1'-0"

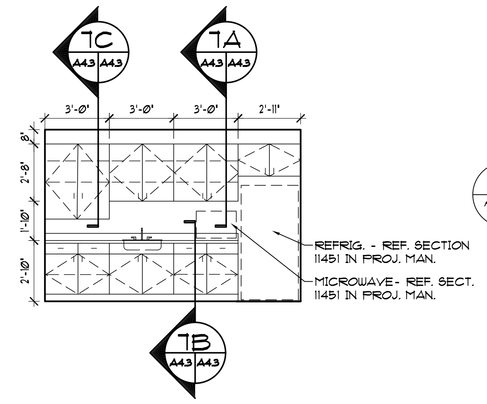

5 A1.1A4.3 BREAK ROOM CAB. ELEV.

SCALE: 1/4" = 1'-0"

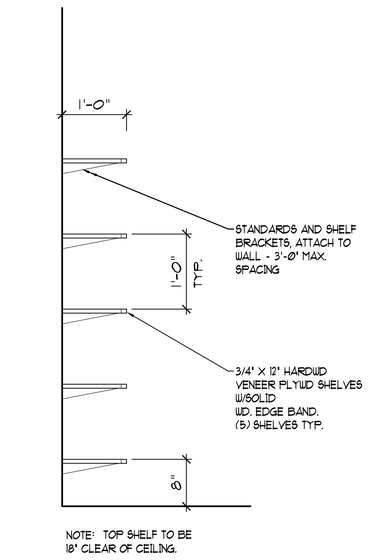

18 A1.1A4.3 SHELVING DETAIL

SCALE: 3/4" = 1'-0"

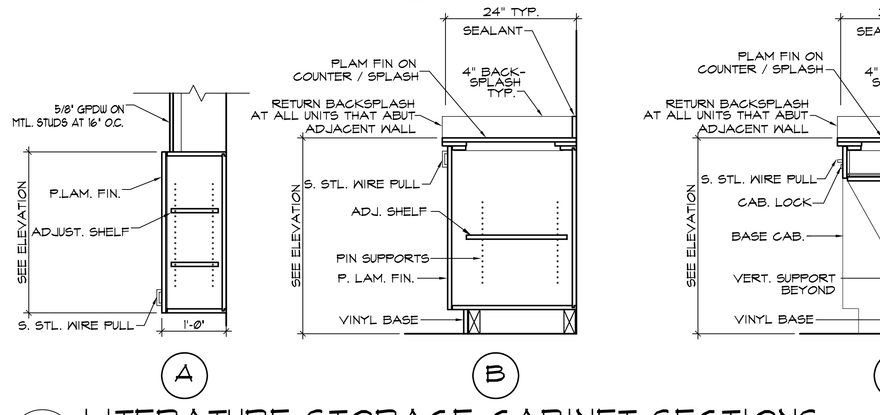

6 A1.1A4.3 LITERATURE STORAGE CABINET SECTIONS

SCALE: 3/4" = 1'-0"

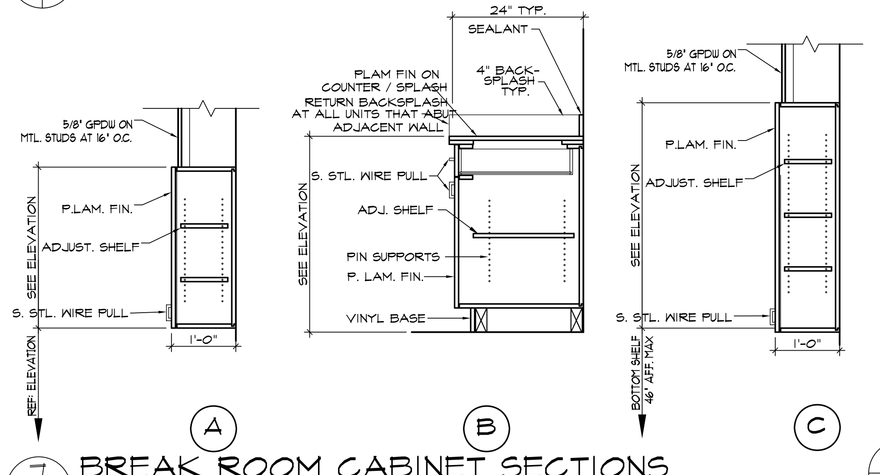

7 A1.1A4.3 BREAK ROOM CABINET SECTIONS

SCALE: 3/4" = 1'-0"

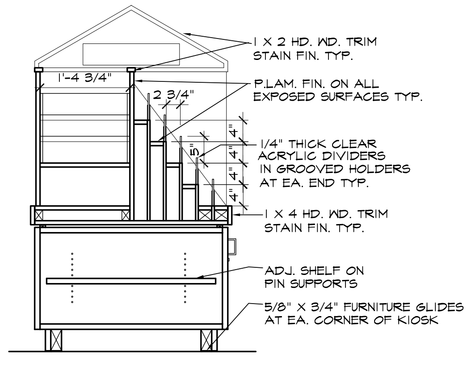

16 A1.1A4.3 BROCHURE KIOSK SECTION

SCALE: 3/4" = 1'-0"

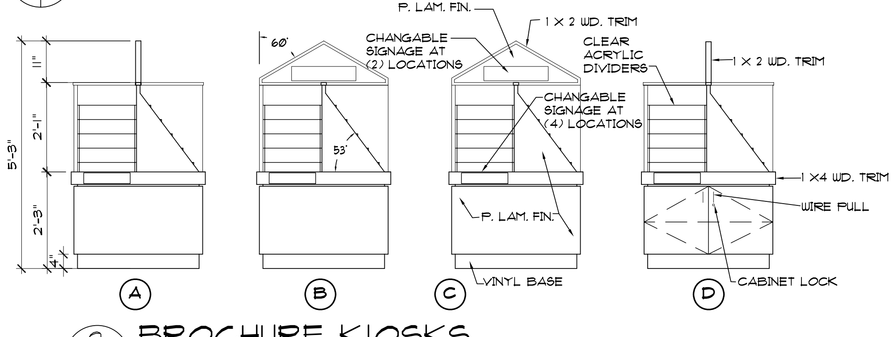

8 A1.1A4.3 BROCHURE KIOSKS

SCALE: 1/2" = 1'-0"

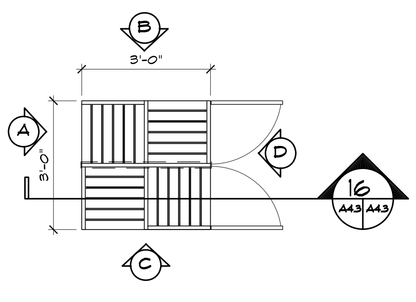

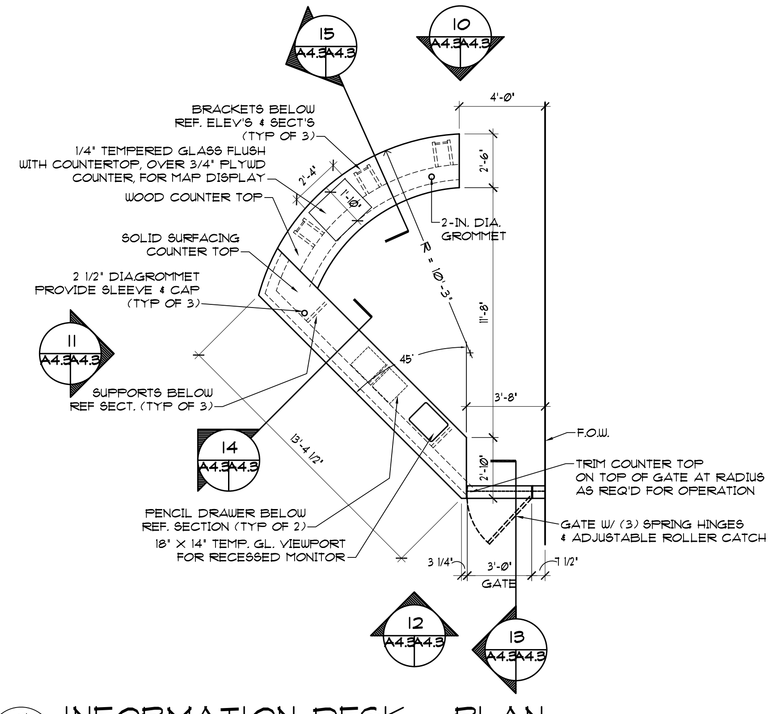

9 A1.1A4.3 INFORMATION DESK - PLAN

SCALE: 1/4" = 1'-0"

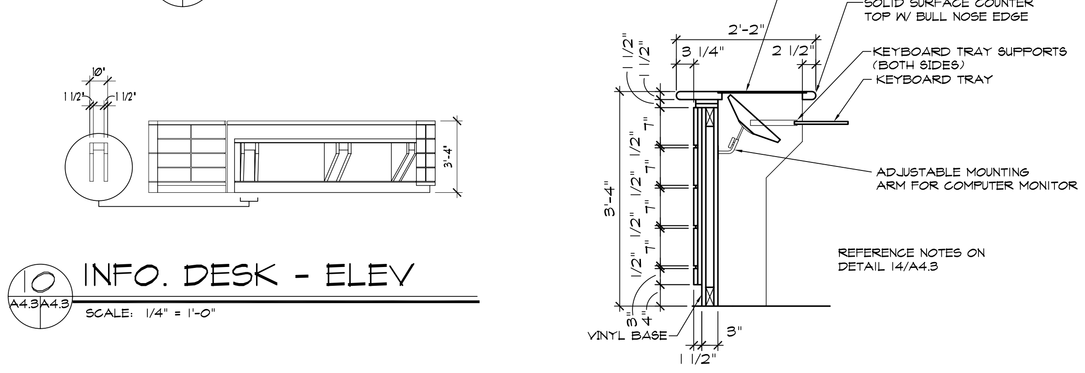

19 A1.1A4.3 INFO. DESK - SECTION

SCALE: 3/4" = 1'-0" AT RECESSED MONITOR

10 A4.3A4.3 INFO. DESK - ELEV

SCALE: 1/4" = 1'-0"

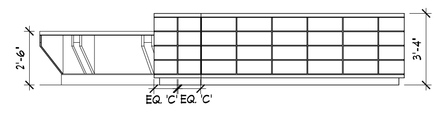

11 A4.3A4.3 INFO.DESK - ELEV

SCALE: 1/4" = 1'-0"

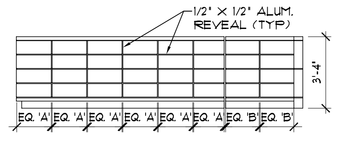

12 A4.3A4.3 INFO. DESK - ELEV

SCALE: 1/4" = 1'-0"

0 2' 4' 8'

SCALE: 1/4" = 1'-0"

0 8" 1'-4" 2'-8"

SCALE: 3/4" = 1'-0"

0 1' 2' 4'

SCALE: 1/2" = 1'-0"

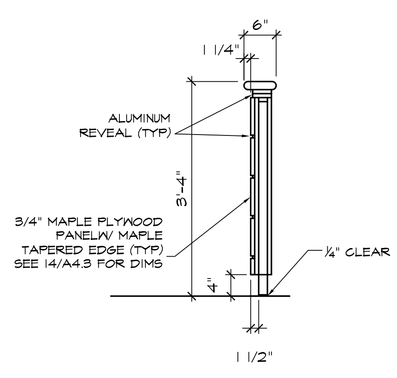

13 A4.3A4.3 INFO. DESK - SECT.

SCALE: 3/4" = 1'-0"

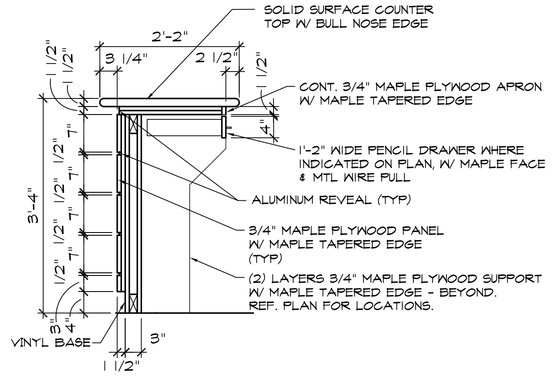

14 A4.3A4.3 INFO. DESK - SECT.

SCALE: 3/4" = 1'-0"

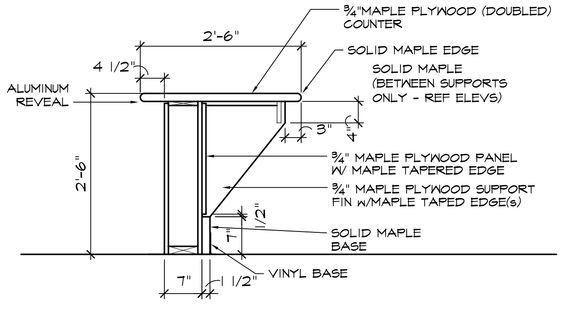

15 A4.3A4.3 INFO. DESK - SECT.

SCALE: 3/4" = 1'-0"

COMMONWEALTH OF VIRGINIA
James T. Rice
Certificate No. 3935
CERTIFIED ARCHITECT

VIRGINIA DEPT. OF TRANSPORTATION
FREDERICKSBURG SAFETY REST AREA AND WELCOME CENTER
I-95 SOUTH, FREDERICKSBURG, VIRGINIA

PROJECT CODE: 501-06501-007

Rawlings Wilson & Associates
ARCHITECTS PLANNERS
1100 NORTH THOMPSON STREET
RICHMOND, VIRGINIA 23230
(804) 358-9141 FAX(804) 359-5715

SHEET TITLE: INTERIOR ELEVATIONS AND DETAILS

DRAWN	TMC
CHECKED	EJR
RWA NO.	1890.01
DATE	8/17/06

DRAWING NO. A4.3

SHEET ___ OF ___

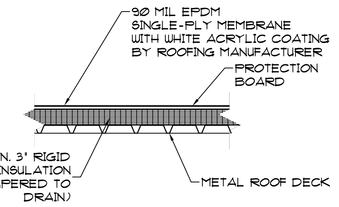

2A A5.1 A5.1 TYP. LOW-SLOPE ROOF

SCALE: 3/4" = 1'-0"

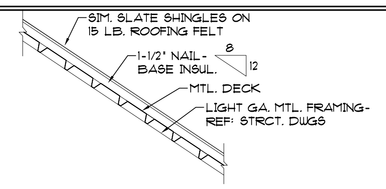

2B A5.1 A5.1 TYP. HIGH-SLOPE ROOF

SCALE: 3/4" = 1'-0"

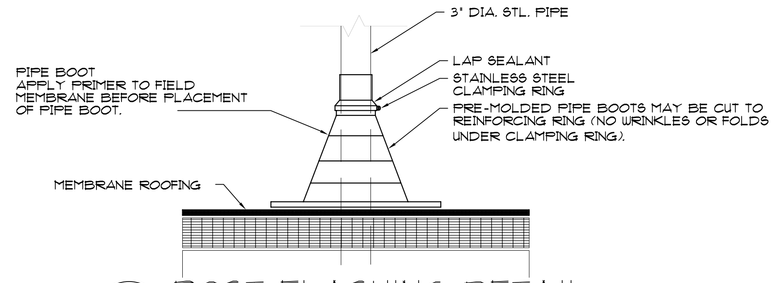

17 A5.1 A5.1 POST FLASHING DETAIL

SCALE: 1-1/2" = 1'-0"

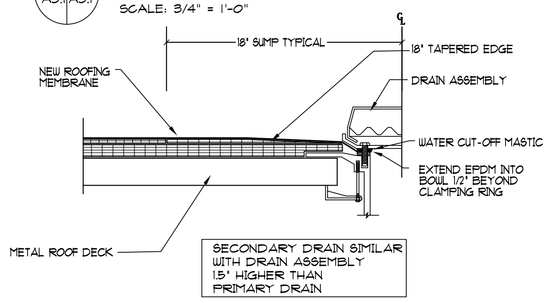

3 A5.1 A5.1 ROOF DRAIN DETAIL

SCALE: 1-1/2" = 1'-0"

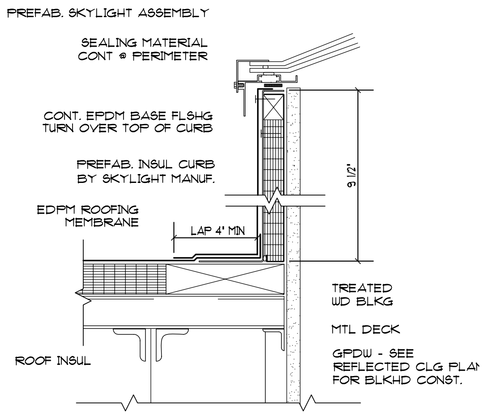

4 A5.1 A5.1 SKYLIGHT DETAIL

SCALE: 1-1/2" = 1'-0"

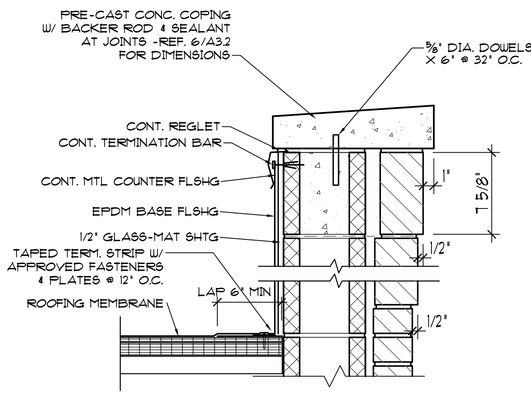

5 A5.1 A5.1 PARAPET DETAIL

SCALE: 1-1/2" = 1'-0"

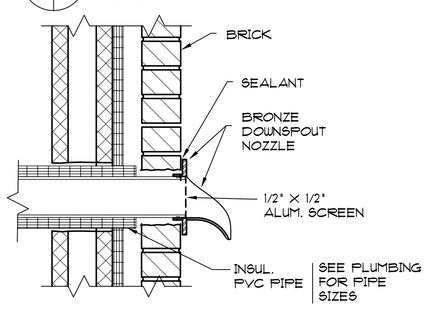

6 A5.1 A5.1 SECONDARY DRAIN DETAIL

SCALE: 1-1/2" = 1'-0"

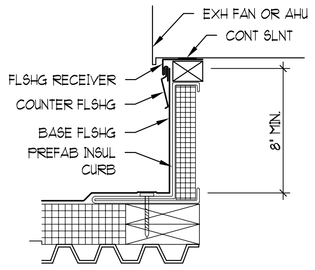

7 A5.1 A5.1 TYP. CURB DETAIL

SCALE: 1-1/2" = 1'-0"

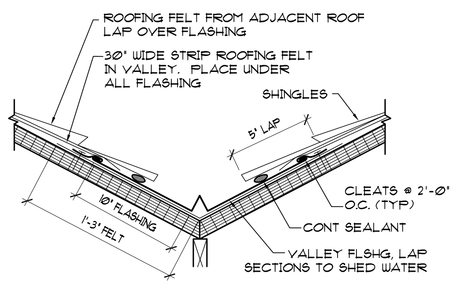

8 A5.1 A5.1 VALLEY DETAIL

SCALE: 1-1/2" = 1'-0"

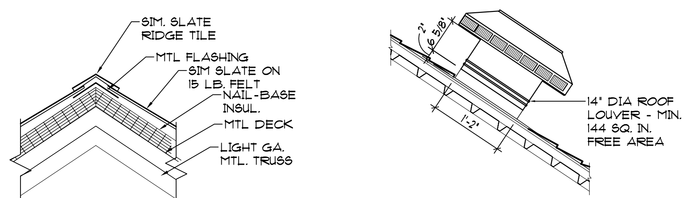

9 A5.1 A5.1 RIDGE DETAIL

SCALE: 1-1/2" = 1'-0"

17 A5.1 A5.1 ROOF VENT

SCALE: 1-1/2" = 1'-0"

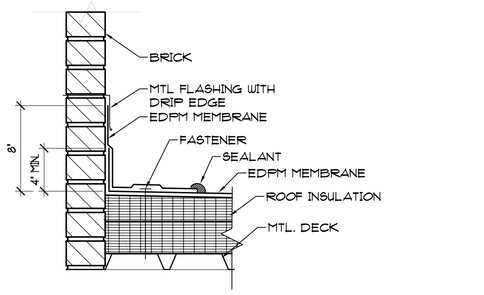

12 A5.1 A5.1 ROOF TO BRICK DETAIL

SCALE: 1-1/2" = 1'-0"

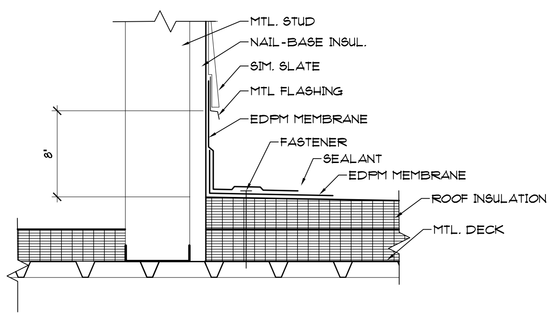

13 A5.1 A5.1 ROOF TO STUD WALL DETAIL

SCALE: 1-1/2" = 1'-0"

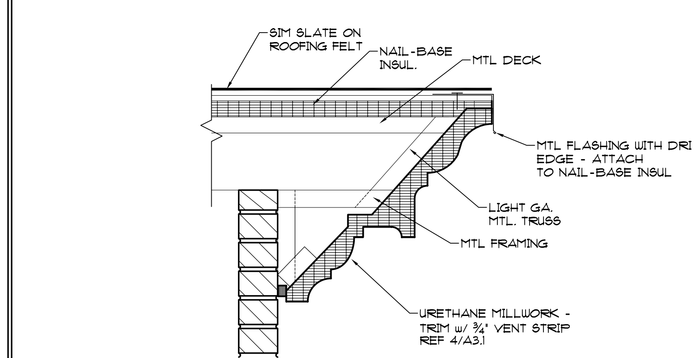

10 A5.1 A5.1 RAKE DETAIL

SCALE: 1-1/2" = 1'-0"

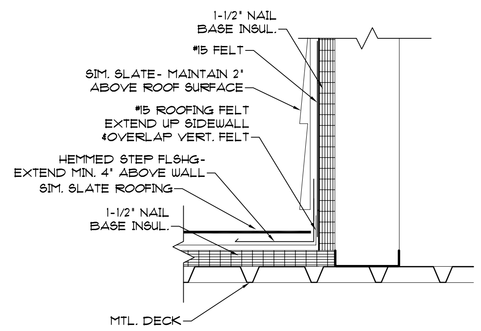

11 A5.1 A5.1 SHINGLE TO SIDING DETAIL

SCALE: 1-1/2" = 1'-0"

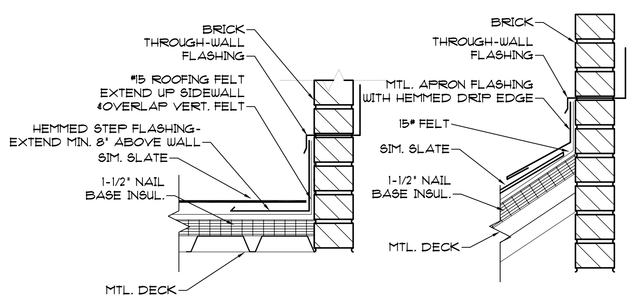

14 A5.1 A5.1 CHIMNEY FLASHING DETAILS

SCALE: 1-1/2" = 1'-0"

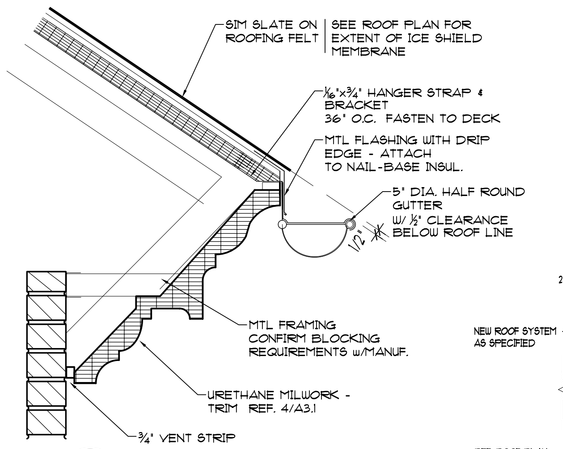

15 A5.1 A5.1 EAVE DETAIL

SCALE: 1-1/2" = 1'-0"

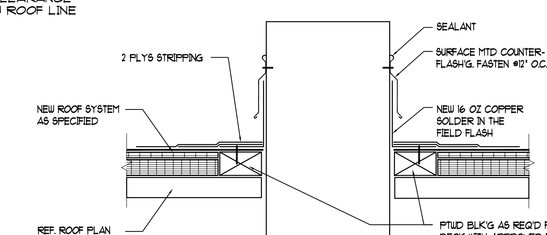

16 A5.1 A5.1 DUCT DETAIL

SCALE: 1-1/2" = 1'-0"

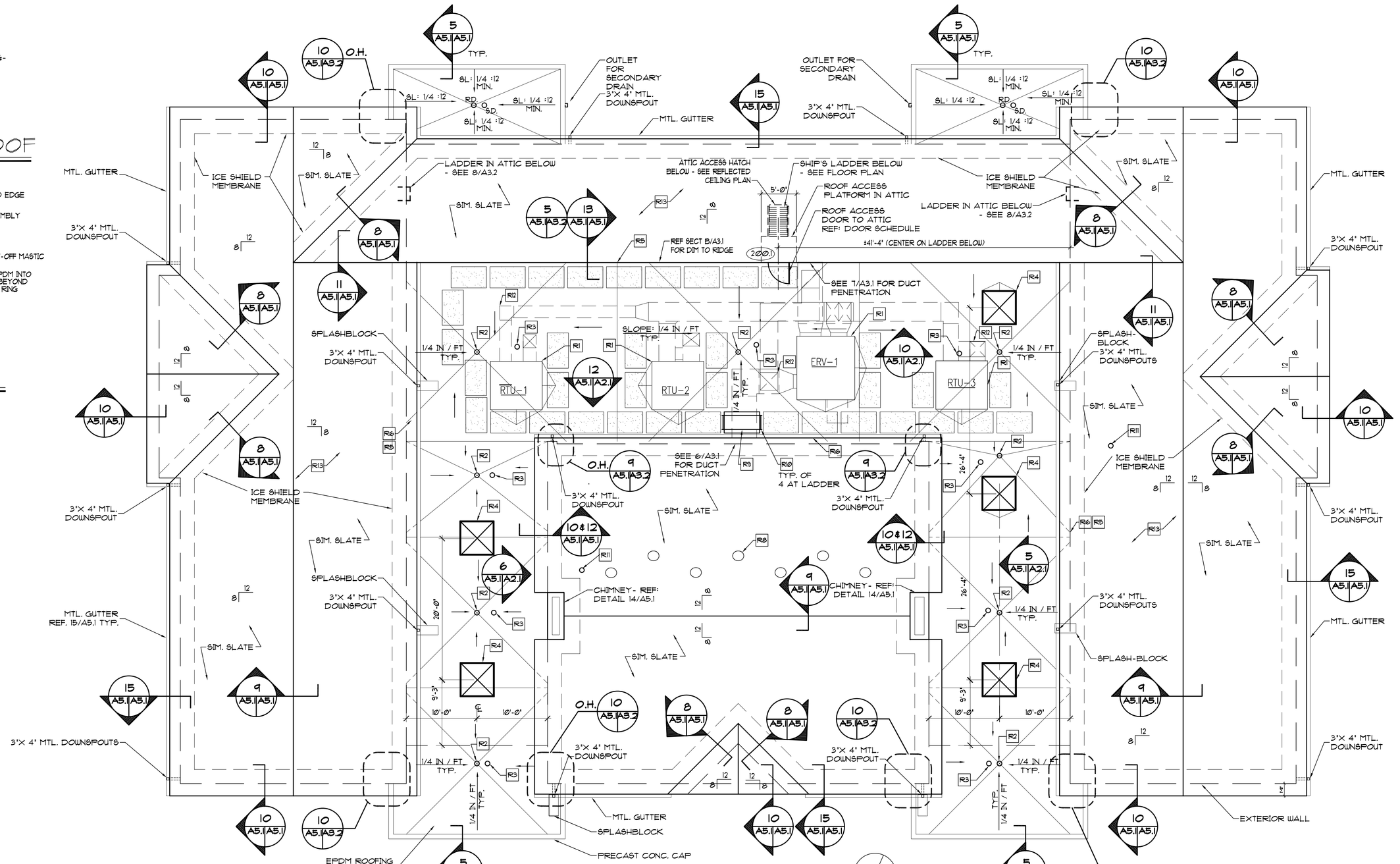

A1.3 A1.3 ROOF PLAN

SCALE: 1/8" = 1'-0"

SCALE: 1/8" = 1'-0"

SCALE: 3/4" = 1'-0"

SCALE: 1 1/2" = 1'-0"

KEYED ROOFING PLAN NOTES: R4

R1. MECHANICAL UNIT CURB. REF: ROOFING DETAIL 7/A5.1.

R2. PRIMARY ROOF DRAIN. REF: ROOFING DETAIL 3/A5.1.

R3. SECONDARY ROOF DRAIN. REF: ROOFING DETAIL 3/A5.1.

R4. SKYLIGHT - REF: ROOFING DETAIL 4/A5.1.

R5. WALL FLASHING - REF: ROOFING DETAIL 12/A5.1.

R6. EAVE DETAIL- REF: ROOFING DETAIL 15/A5.1

R7. WALL FLASHING REF: ROOFING DETAIL 13/A5.1

R8. ROOF VENT, TYP. OF 7 - REF: SECTION 10000

R9. LADDER AND PLATFORM TO CROSS OVER DUCT. REF. 07720 IN PROJECT MANUAL, AND DETAIL F ON SHEET S3.2 FOR POST ATTACHMENTS TO ROOF.

R10. POST PENETRATION FLASHING - REF. 17/A5.1.

R11. PLUMBING VENT THROUGH SLOPED ROOF. FLASH PER SIMULATED SLATE ROOFING MANUF. RECOMM.

R12. DUCT PENETRATION - REF. 16/A5.1.

R13. SEE STRUCTURAL PLAN ON SHEET S2.2 FOR ATTIC PLAN AND ATTIC WALKWAYS.

GENERAL ROOFING NOTES:

A. ALL LOW-SLOPE ROOF AREAS ARE TO RECEIVE 3 IN. BASE INSULATION, 1/4 IN (MIN.) TAPERED INSULATION, 1/2" PROTECTION BOARD, AND SINGLE-PLY ROOFING. REFER TO SECTION 07531 IN PROJECT MANUAL.

B. SMALL CRICKETS AND SADDLES, WHERE REQUIRED, SHALL BE 1/2 IN. /FT. SLOPE.

C. FOR CONDITIONS NOT SPECIFICALLY KEYED IN, USE DETAIL FOR SIMILAR CONDITION AS RECOMMENDED BY THE NATIONAL ROOFING CONTRACTOR'S ASSOCIATION AND ROOFING SYSTEM MANUFACTURER.

D. CONTRACTOR TO SUBMIT FOR ARCHITECT'S REVIEW THE TAPERED INSULATION LAYOUT PLAN.

E. DETAILS ARE SHOWN GENERALLY TO INDICATE FLASHING CONDITIONS. INSULATION THICKNESS WILL VARY - ACTUAL THICKNESS OF TAPERED INSULATION SHALL BE AS REQUIRED TO CREATE DRAINAGE PATTERNS INDICATED ON PLAN.

COMMONWEALTH OF VIRGINIA
James T. Rice
Certificate No. 9935
8/17/06
CERTIFIED ARCHITECT

VIRGINIA DEPT. OF TRANSPORTATION
FREDERICKSBURG SAFETY REST AREA AND WELCOME CENTER
I-95 SOUTH, FREDERICKSBURG, VIRGINIA
PROJECT CODE: 501-06501-007

Rawlings Wilson & Associates
ARCHITECTS PLANNERS
1100 NORTH THOMPSON STREET
RICHMOND, VIRGINIA 23230
(804) 358-9141 FAX(804) 359-5715

SHEET TITLE: ROOF PLAN AND DETAILS

DRAWN	TMC
CHECKED	EJR
RWA NO.	189001
DATE	8/17/06

DRAWING NO. A5.1
SHEET ___ OF ___

GLAZING SCHEDULE

TYPE	DESCRIPTION
GL1	1/4" CLEAR FLOAT GLASS
GL2	1/4" TEMPERED FLOAT GLASS
GL3	1" INSULATED, LOW E, TINTED GLAZING
GL4	1" INSULATED - INTERIOR PANE SPANDREL GLASS
GL5	1" INSULATED - INTERIOR PANE PATTERN GLASS
GL6	1" TEMPERED INSULATED, LOW E, TINTED GLAZING

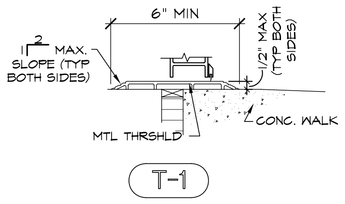

5 THRESHOLD DETAIL
A6.1|A6.1
SCALE: 3" = 1'-0"

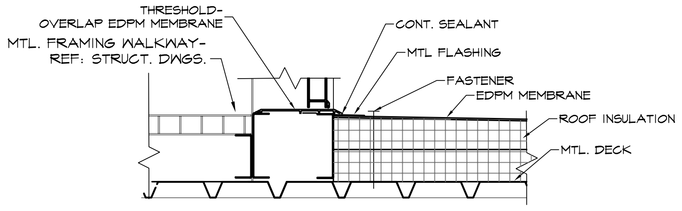

4 ROOF ACCESS DOOR 200.1 THRESHOLD DETAIL
A6.1|A6.1
SCALE: 1-1/2" = 1'-0"

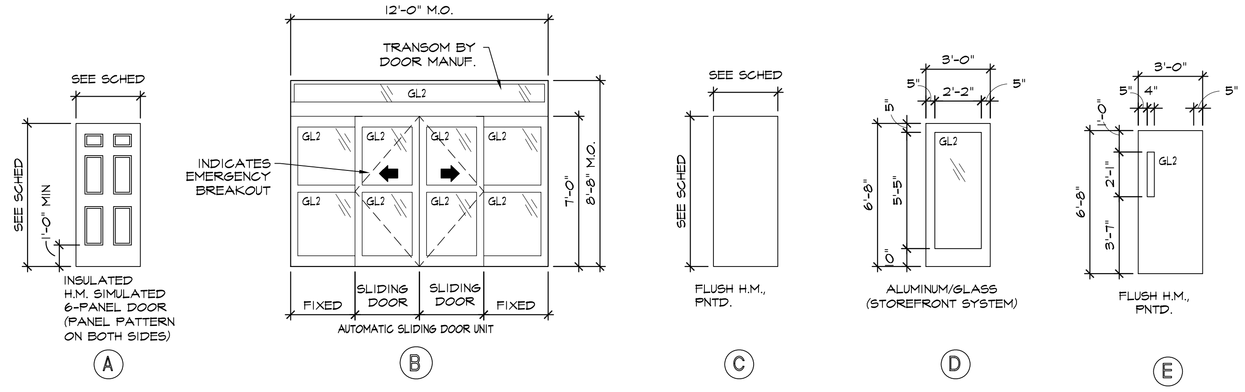

1 DOOR TYPES
A6.1|A6.1
SCALE: 1/4" = 1'-0"

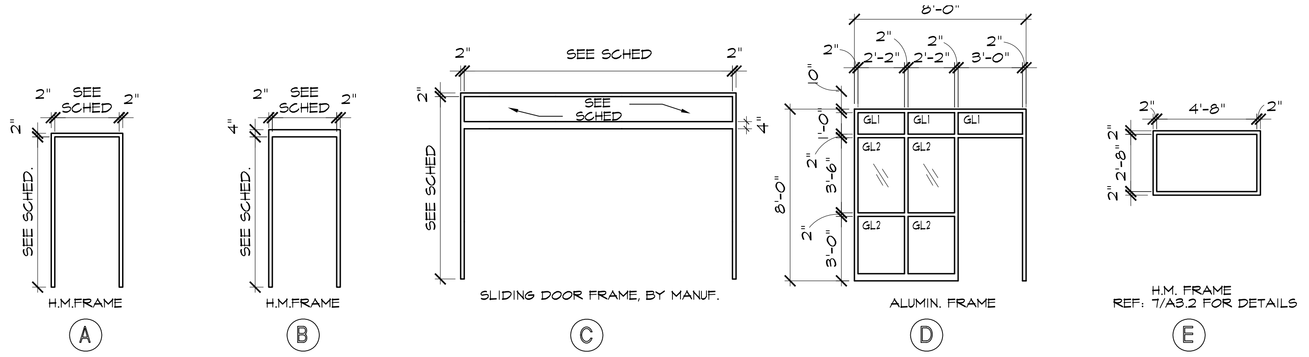

2 HOLLOW METAL FRAMES AND STOREFRONT TYPES
A6.1|A6.1
SCALE: 1/4" = 1'-0"

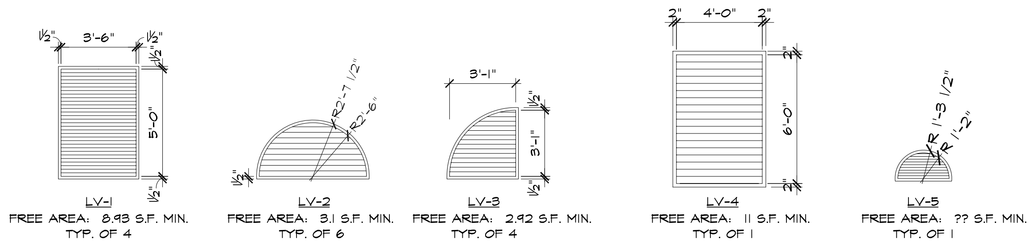

6 LOUVER TYPES
A2.1|A6.1
SCALE: 1/4" = 1'-0"

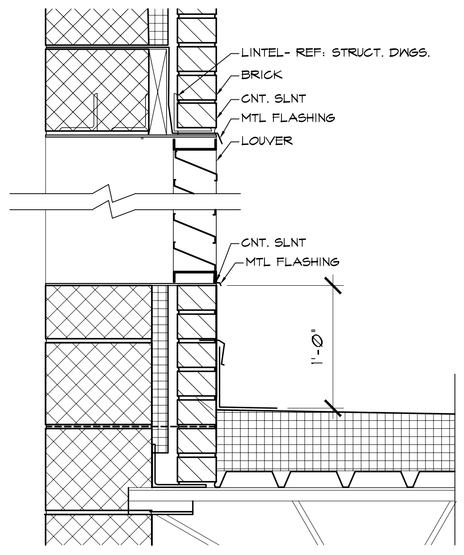

7 LOUVER DETAIL
A2.1|A6.1
SCALE: 3/4" = 1'-0" TYPE LV-4

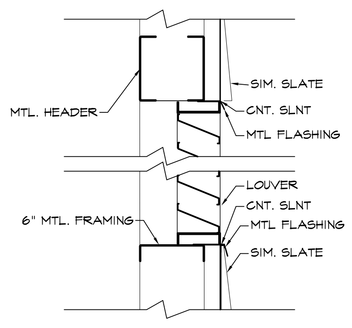

8 LOUVER DETAIL
A2.1|A6.1
SCALE: 3/4" = 1'-0" TYPE LV-1

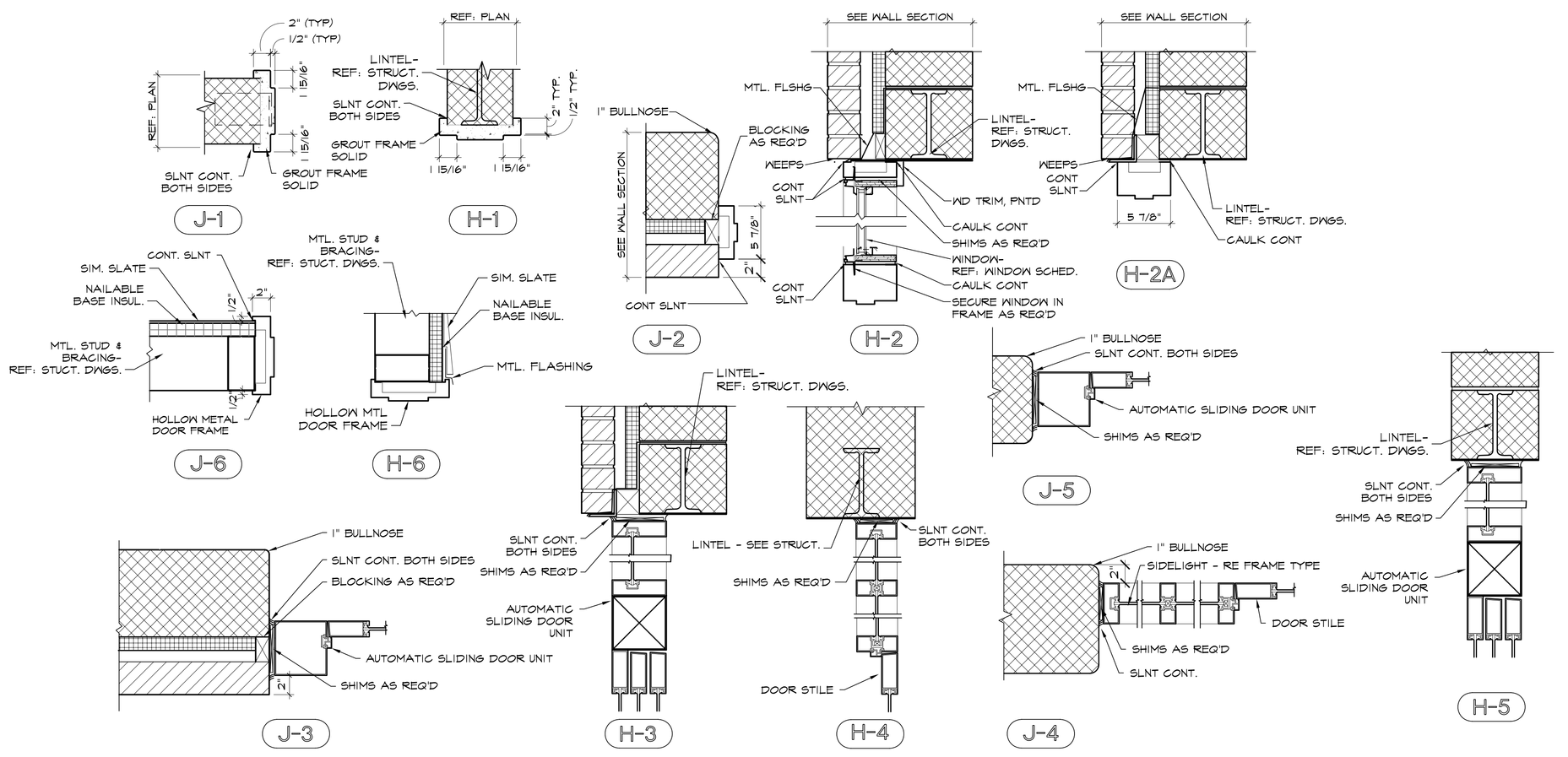

3 DOOR FRAME DETAILS
A6.1|A6.1
SCALE: 1-1/2" = 1'-0"

DOOR SCHEDULE

OPENING NUMBER	RATING	DOOR SIZE: (TYP = 3'-0"x6'-8"x1 3/4")	DOOR TYPE	FRAME TYPE	FRAME DETAILS HEAD	FRAME DETAILS JAMB	FRAME DETAILS THRSHLD	HARDWARE SET	DOOR NOTES
100.1	-	AUTO SLIDING DOOR SYSTEM	B	C	H-3	J-3	T1	-	
101	-	TYP.	C	A	H-1	J-1	--	1	
102.1	-	TYP.	C	A	H-1	J-1	--	2	
103.1	-	AUTO SLIDING DOOR SYSTEM	B	C	H-3	J-3	T1	-	
104.A1	-	2'-8" x 6'-8" x 1 3/4"	C	A	H-1	J-1	--	3	
105.A1	-	2'-8" x 6'-8" x 1 3/4"	C	A	H-1	J-1	--	3	
106.A1	-	2'-8" x 6'-8" x 1 3/4"	C	A	H-1	J-1	--	3	
106.B1	-	2'-8" x 6'-8" x 1 3/4"	C	A	H-1	J-1	--	3	
107.A1	-	2'-8" x 6'-8" x 1 3/4"	C	A	H-1	J-1	--	3	
108.A1	-	2'-8" x 6'-8" x 1 3/4"	C	A	H-1	J-1	--	3	
108.B1	-	2'-8" x 6'-8" x 1 3/4"	C	A	H-1	J-1	--	3	
109.1	-	TYP.	C	A	H-2A	J-2	T1	6	
109.2	-	AUTO SLIDING DOOR SYSTEM	B	C	H-5	J-5	--	-	2
110.1	-	TYP.	C	A	H-1	J-1	--	1	
111	-	AUTO SLIDING DOOR SYSTEM	B	C	H-3	J-3	T-1	-	
112.1	-	ALUMIN. STOREFRONT	D	D	H-4	J-4	--	5	
112.2	-	TYP.	C	A	H-1	J-1	--	4	
113.1	-	TYP.	C	A	H-1	J-1	--	4	
113.2	-	(PR) TYP.	C	A	H-1	J-1	--	7	
114.1	-	TYP.	C	A	H-1	J-1	--	7	
115.1	-	TYP.	C	A	H-1	J-1	--	9	
115.2	-	TYP.	C	A	H-1	J-1	--	9	
115.A1	-	(PR) 2'-0" x 6'-8" x 1 3/4"	C	A	H-1	J-1	--	7	
115.B1	-	(PR) TYP.	C	A	H-1	J-1	--	7	
116.1	-	TYP.	C	A	H-1	J-1	--	5	
116.2	-	(PR) 3'-0" x 7'-0" x 1 3/4"	A	B	H-2	J-2	--	10	1
117.1	-	TYP.	C	A	H-1	J-1	--	11	
117.2	-	(PR) 3'-0" x 7'-0" x 1 3/4"	A	B	H-2	J-2	--	10	1
118.1	-	AUTO SLIDING DOOR SYSTEM	B	C	H-3	J-3	T1	-	
119.1	-	(PR) TYP.	C	A	H-1	J-1	--	12	
119.2	-	(PR) TYP.	C	A	H-1	J-1	--	12	
120.1	-	TYP.	C	A	H-1	J-1	--	13	
121.1	-	TYP.	C	A	H-1	J-1	--	9	
122.1	-	(PR) TYP.	E	A	H-1	J-1	--	7A	
123.1	-	(PR) TYP.	C	A	H-1	J-1	--	7	
123.2	-	(PR) 3'-0" x 7'-0" x 1 3/4"	A	B	H-2	J-2	--	10	1
DOOR TO ROOF									
200.1	-	3'-0" x 7'-0" x 1 3/4"	A	A	H-6	J-6	4/A6.1	10	
GROUNDS BUILDING									
G124.1	-	(PR) 3'-0" x 7'-0" x 1 3/4"	A	B	H-2A	J-2	--	14	

KEYED NOTES:

DOOR NOTES:

1. INSTALL WIDE ANGLE PEEPHOLE- TO BE 60" ABOVE FIN. FLOOR AND CENTERED IN DOOR WIDTH
2. EXTERIOR SIDE OF DOOR TO BE INSTALLED TOWARD VENDING ROOM 103

0 4" 8" 1'-4"
SCALE: 1 1/2" = 1'-0"

0 2' 4' 8'
SCALE: 1/4" = 1'-0"

0 8" 1'-4" 2'-8"
SCALE: 3/4" = 1'-0"

COMMONWEALTH OF VIRGINIA
James T. Rice
Certificate No. 3935
8/17/06
CERTIFIED ARCHITECT

VIRGINIA DEPT. OF TRANSPORTATION
FREDERICKSBURG SAFETY REST AREA AND WELCOME CENTER
I-95 SOUTH, FREDERICKSBURG, VIRGINIA
PROJECT CODE: 501-06501-007

Rawlings Wilson & Associates
ARCHITECTS PLANNERS
1100 NORTH THOMPSON STREET
RICHMOND, VIRGINIA 23230
(804) 358-9141 FAX(804) 359-5715

SHEET TITLE: DOOR AND LOUVER TYPES AND DETAILS

DRAWN	MMC, TMC
CHECKED	EJR
RWA NO.	1890.01
DATE	8/17/06

DRAWING NO. A6.1
SHEET ___ OF ___

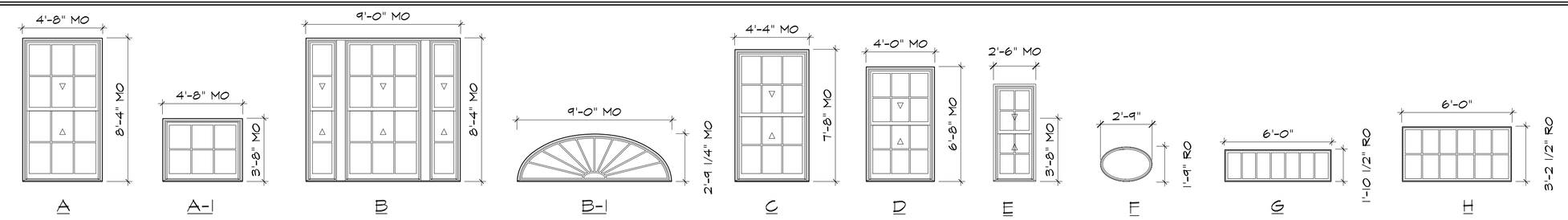

GLAZING SCHEDULE

TYPE	DESCRIPTION
GL1	1/4" CLEAR FLOAT GLASS
GL2	1/4" TEMPERED FLOAT GLASS
GL3	1" INSULATED, LOW E, TINTED GLAZING
GL4	1" INSULATED - INTERIOR PANE SPANDREL GLASS
GL5	1" INSULATED - INTERIOR PANE PATTERN GLASS
GL6	1" TEMPERED INSULATED, LOW E, TINTED GLAZING

WINDOW SCHEDULE

NUMBER	HEAD HEIGHT (U.O.N.) A.F.F.	TYPE	DETAILS JAMBS (SHEET A6.2)	DETAILS HEAD SILL (SHEET A6.2)	DETAILS LINTEL (SHEET A6.2)	GLASS TYPE	REMARK
01	10'-8"	C	5	E	PC-6	GL-3	
02	10'-8"	C	5	E	PC-6	GL-3	
03	10'-8"	C	5	E	PC-6	GL-3	
04	8'-8"	E	5	E	PC-2	GL-3	NOTE 1
05	8'-8"	E	5	E	PC-2	GL-3	NOTE 1
06	11'-4"	A	5	D	PC-12	GL-3	
07	11'-4"	A	5	D	PC-12	GL-3	
08	11'-4"	B	5,4	D1	PC-12	GL-3	NOTE 4
09	11'-4"	A	5	D	PC-12	GL-3	
10	11'-4"	A	5	D	PC-12	GL-3	
11	8'-8"	E	5	E	PC-2	GL-3	NOTE 1
12	8'-8"	E	5	E	PC-2	GL-3	NOTE 1
13	10'-8"	C	5	E	PC-6	GL-3	
14	10'-8"	C	5	E	PC-6	GL-3	
15	10'-8"	C	6	C	PC-6	GL-4	
16	10'-8"	C	6	C	PC-6	GL-4	
17	10'-8"	C	5	E	PC-6	GL-5	
18	10'-8"	C	6	C	PC-6	GL-4	
19	10'-8"	C	5	E	PC-6	GL-5	
20	10'-8"	C	6	C	PC-6	GL-4	
21	10'-8"	C	5	E	PC-6	GL-5	
22	10'-8"	C	6	C	PC-6	GL-4	
23	10'-8"	C	5	E	PC-6	GL-5	
24	10'-8"	C	6	C	PC-6	GL-4	
25	10'-8"	C	6	C	PC-6	GL-4	
26	10'-8"	C	6	C	PC-6	GL-4	
27	8'-8"	E	5	E	PC-2	GL-3	NOTE 1
28	8'-8"	E	5	E	PC-2	GL-3	NOTE 1
29	9'-4"	D	5	E	PC-1	GL-4	NOTE 2
30	9'-4"	D	6	C	PC-1	GL-4	
31	9'-4"	D	5	E	PC-1	GL-3	NOTE 2
32	9'-4"	D	5	E	PC-1	GL-3	NOTE 2
33	10'-8"	C	5	E	PC-6	GL-3	NOTE 2,3
34	10'-8"	C	5	E	PC-6	GL-3	NOTE 2,3
35	10'-8"	C	5	E	PC-6	GL-3	NOTE 2,3
36	10'-8"	C	5	E	PC-6	GL-3	NOTE 2
37	10'-8"	C	5	E	PC-6	GL-3	NOTE 2
38	10'-8"	C	5	E	PC-6	GL-3	NOTE 2
39	10'-8"	C	5	E	PC-6	GL-3	NOTE 2
40	16'-0"	A-1	7	B1	PC-8	GL-3	
41	16'-0"	A-1	7	B1	PC-8	GL-3	
42	11'-4"	B-1	7	B	PC-9	GL-3	DIMENSION TO BOTTOM OF WINDOW
43	16'-0"	A-1	7	B1	PC-8	GL-3	
44	16'-0"	A-1	7	B1	PC-8	GL-3	
45	22'-4"	F	--	A	PC-11	GL-3	DIMENSION TO CENTER OF WINDOW
46	TRANSOM	H	--	3,(1+2) A6.1	PC-1	GL-6	
47	TRANSOM	H	--	3,(1+2) A6.1	PC-1	GL-6	
48	TRANSOM	G	--	3,(1+2) A6.1	PC-13	GL-6	

GENERAL NOTES

1. LINTEL SPANS CONTINUOUSLY OVER SIDE WINDOWS AND AUTOMATIC SLIDING DOOR SYSTEM
2. WINDOW TO HAVE HORIZONTAL LOUVER BLINDS
3. WINDOW TO HAVE DARKENING SHADES
4. USE D1 FOR SILL DETAIL

1 WINDOW TYPES

A6.1|A6.1 SCALE: 1/4" = 1'-0"

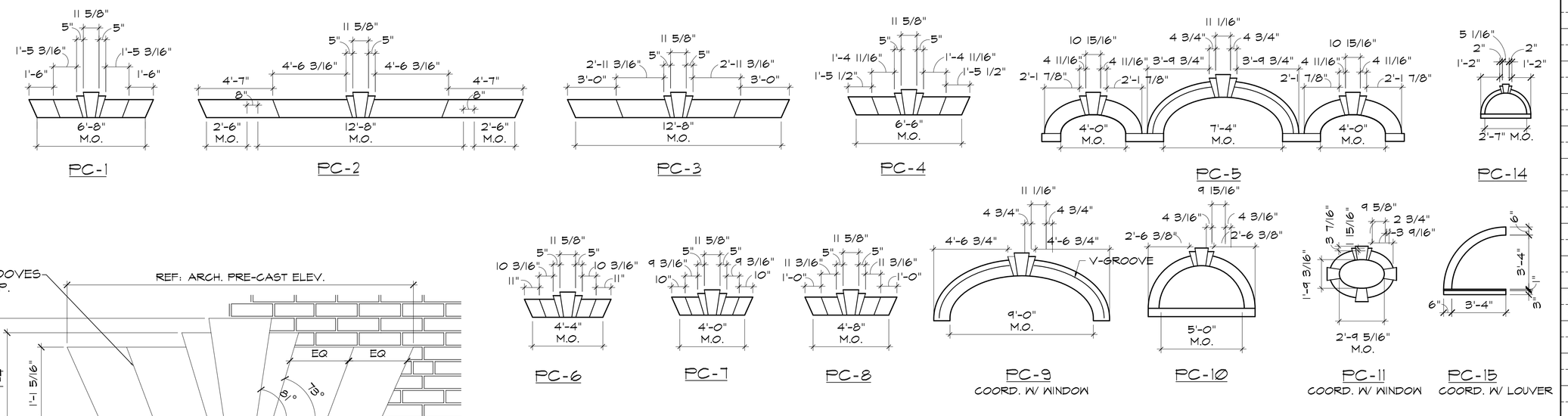

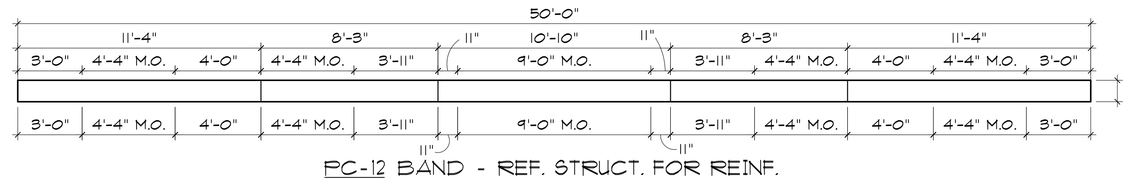

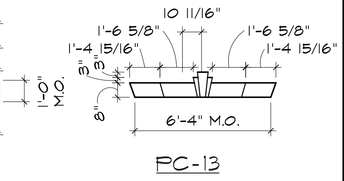

4 WINDOW JAMB DETAIL

A6.1|A6.1 SCALE: 1-1/2" = 1'-0" INTERIOR OF WOOD WINDOWS TO BE PAINTED

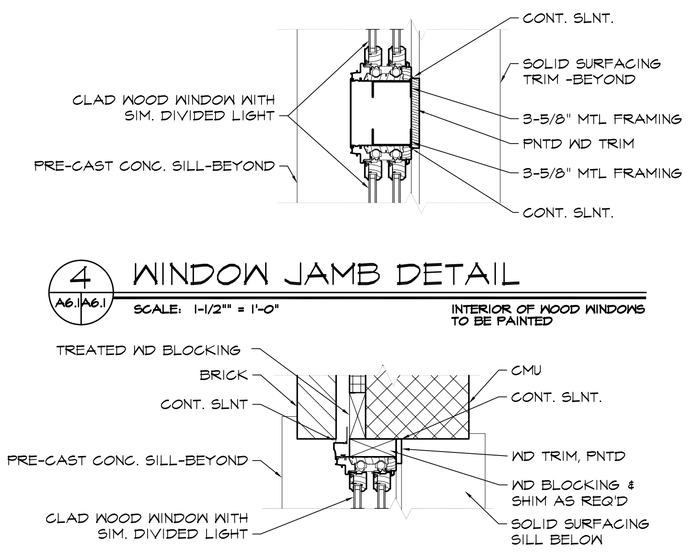

5 WINDOW JAMB DETAIL

A6.1|A6.1 SCALE: 1-1/2" = 1'-0" INTERIOR OF WOOD WINDOWS TO BE PAINTED

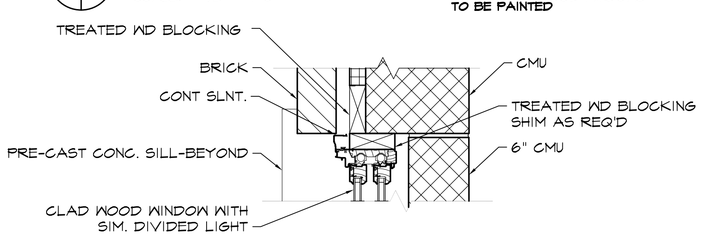

6 WINDOW JAMB DETAIL

A6.1|A6.1 SCALE: 1-1/2" = 1'-0" INTERIOR OF WOOD WINDOWS TO BE PAINTED

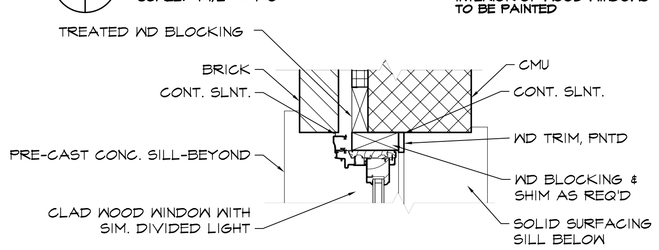

7 WINDOW JAMB DETAIL

A6.1|A6.1 SCALE: 1-1/2" = 1'-0" INTERIOR OF WOOD WINDOWS TO BE PAINTED

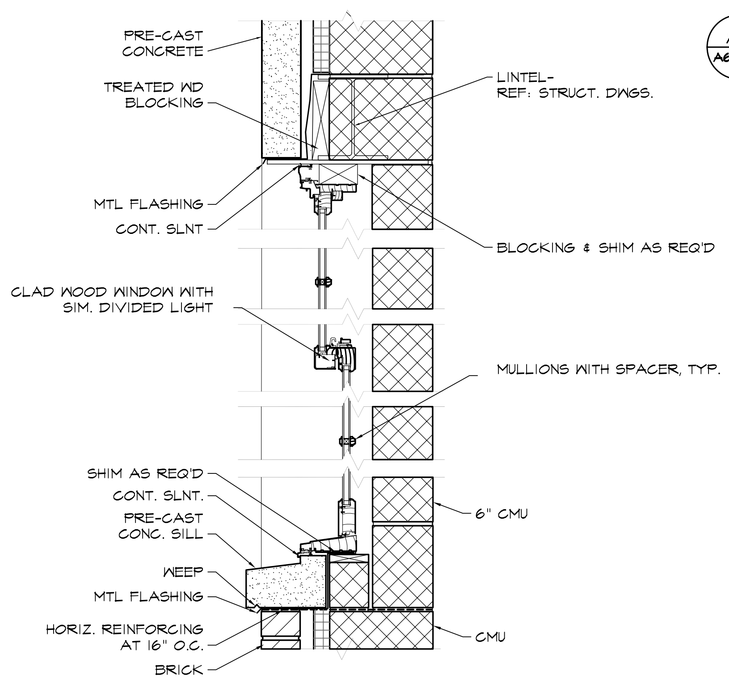

C WINDOW HEAD & SILL DETAIL

A6.1|A6.1 SCALE: 1-1/2" = 1'-0" INTERIOR OF WOOD WINDOWS TO BE PAINTED

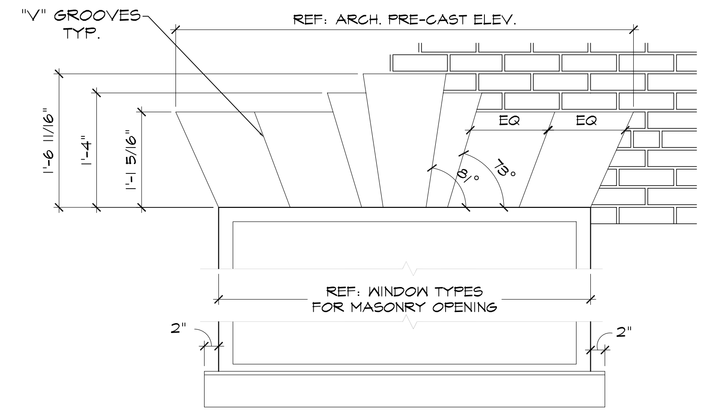

TYPICAL

2 PRECAST KEYSTONE LINTEL & SILL

A6.1|A6.1 SCALE: 1" = 1'-0"

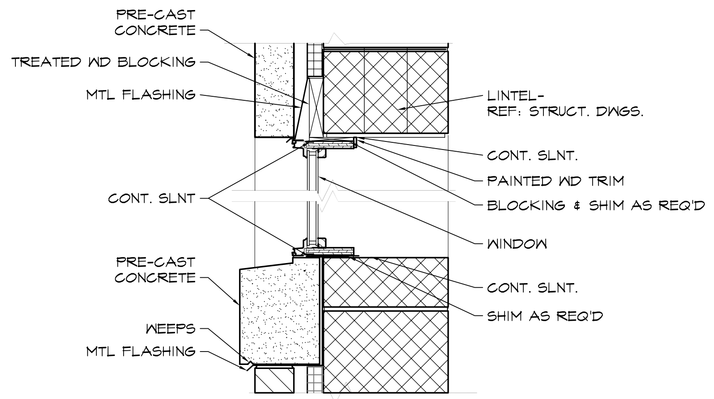

A WINDOW HEAD & SILL DETAIL

A6.1|A6.1 SCALE: 1-1/2" = 1'-0" INTERIOR OF WOOD WINDOWS TO BE PAINTED

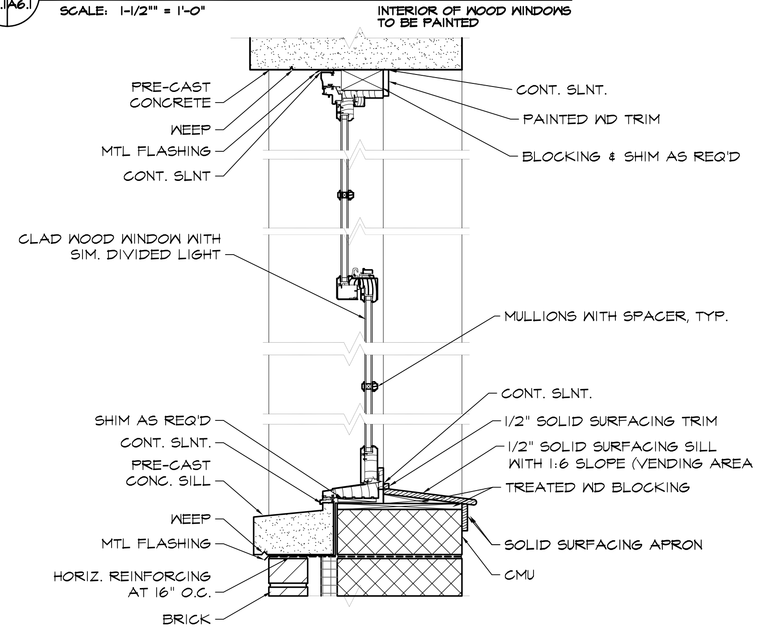

D WINDOW HEAD & SILL DETAIL

A6.1|A6.1 SCALE: 1-1/2" = 1'-0" INTERIOR OF WOOD WINDOWS TO BE PAINTED

3 ARCHITECTURAL PRECAST CONCRETE ELEVATIONS

A6.1|A6.1 SCALE: 1/4" = 1'-0"

REF: SHEET A1.4, & A1.5, FOR SITE WALL CAPS, AND GROUNDS BUILDING.
REF: SHEET A6.1 & A2.1 PLAZA AND ELEVATIONS

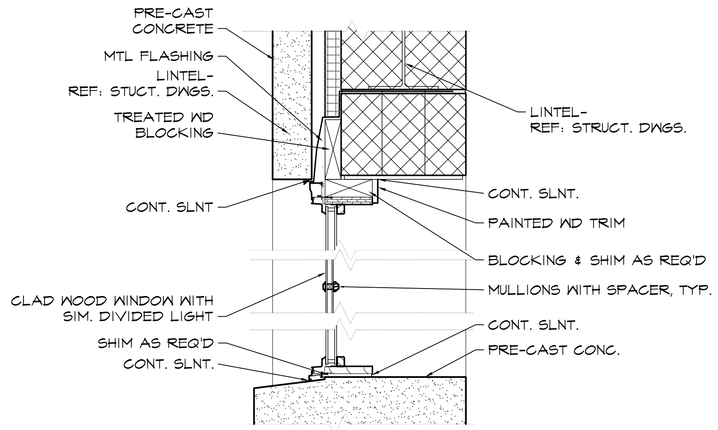

B WINDOW HEAD & SILL DETAIL

A6.1|A6.1 SCALE: 1-1/2" = 1'-0" INTERIOR OF WOOD WINDOWS TO BE PAINTED

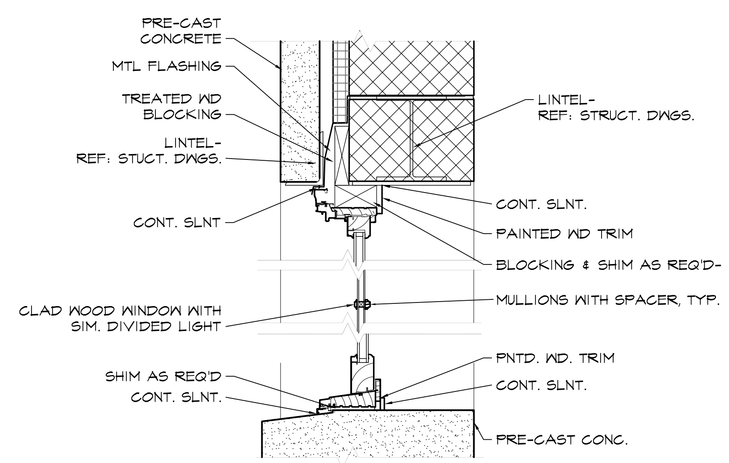

B1 WINDOW HEAD & SILL DETAIL

A6.1|A6.1 SCALE: 1-1/2" = 1'-0" INTERIOR OF WOOD WINDOWS TO BE PAINTED

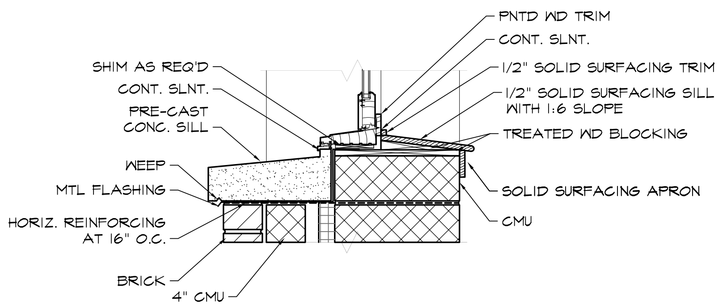

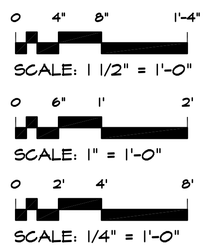

D1 WINDOW SILL DETAIL

A6.1|A6.1 SCALE: 1-1/2" = 1'-0" INTERIOR OF WOOD WINDOWS TO BE PAINTED

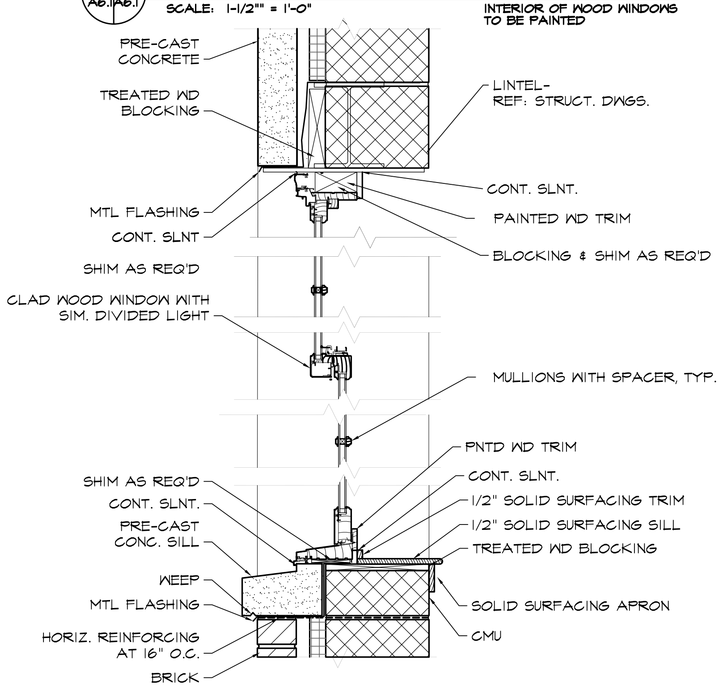

E WINDOW HEAD & SILL DETAIL

A6.1|A6.1 SCALE: 1-1/2" = 1'-0" INTERIOR OF WOOD WINDOWS TO BE PAINTED

COMMONWEALTH OF VIRGINIA
James T. Rice
Certificate No. 3935
8/17/06
CERTIFIED ARCHITECT

VIRGINIA DEPT. OF TRANSPORTATION
FREDERICKSBURG SAFETY REST AREA AND WELCOME CENTER
I-95 SOUTH, FREDERICKSBURG, VIRGINIA
PROJECT CODE: 501-06501-007

Rawlings Wilson & Associates
ARCHITECTS PLANNERS
1100 NORTH THOMPSON STREET
RICHMOND, VIRGINIA 23230
(804) 358-9141 FAX(804) 359-5715

SHEET TITLE: WINDOW AND PRECAST TYPES AND DETAILS

DRAWN	MMC,TMC
CHECKED	EJR
RWA NO.	1890.01
DATE	8/17/06

DRAWING NO. A6.2
SHEET ___ OF ___

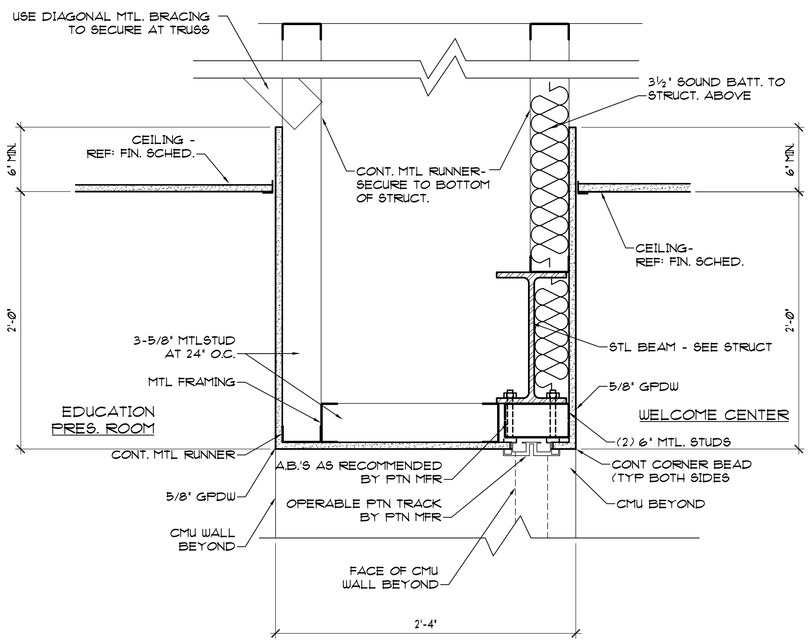

A7.1 | A7.1 OPERABLE PARTITION DETAIL

SCALE: 1-1/2" = 1'-0"

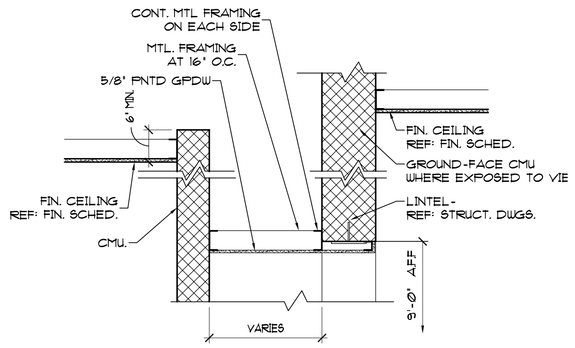

2 | A7.1 | A7.1 SOFFIT DETAIL

SCALE: 3/4" = 1'-0"

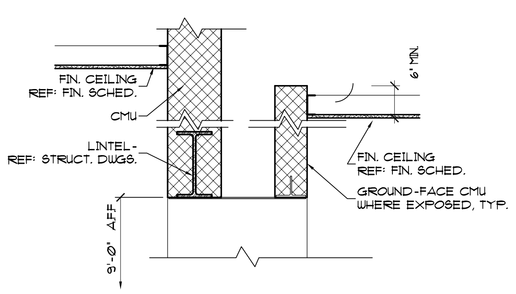

3 | A7.1 | A7.1 HEADER DETAIL

SCALE: 3/4" = 1'-0"

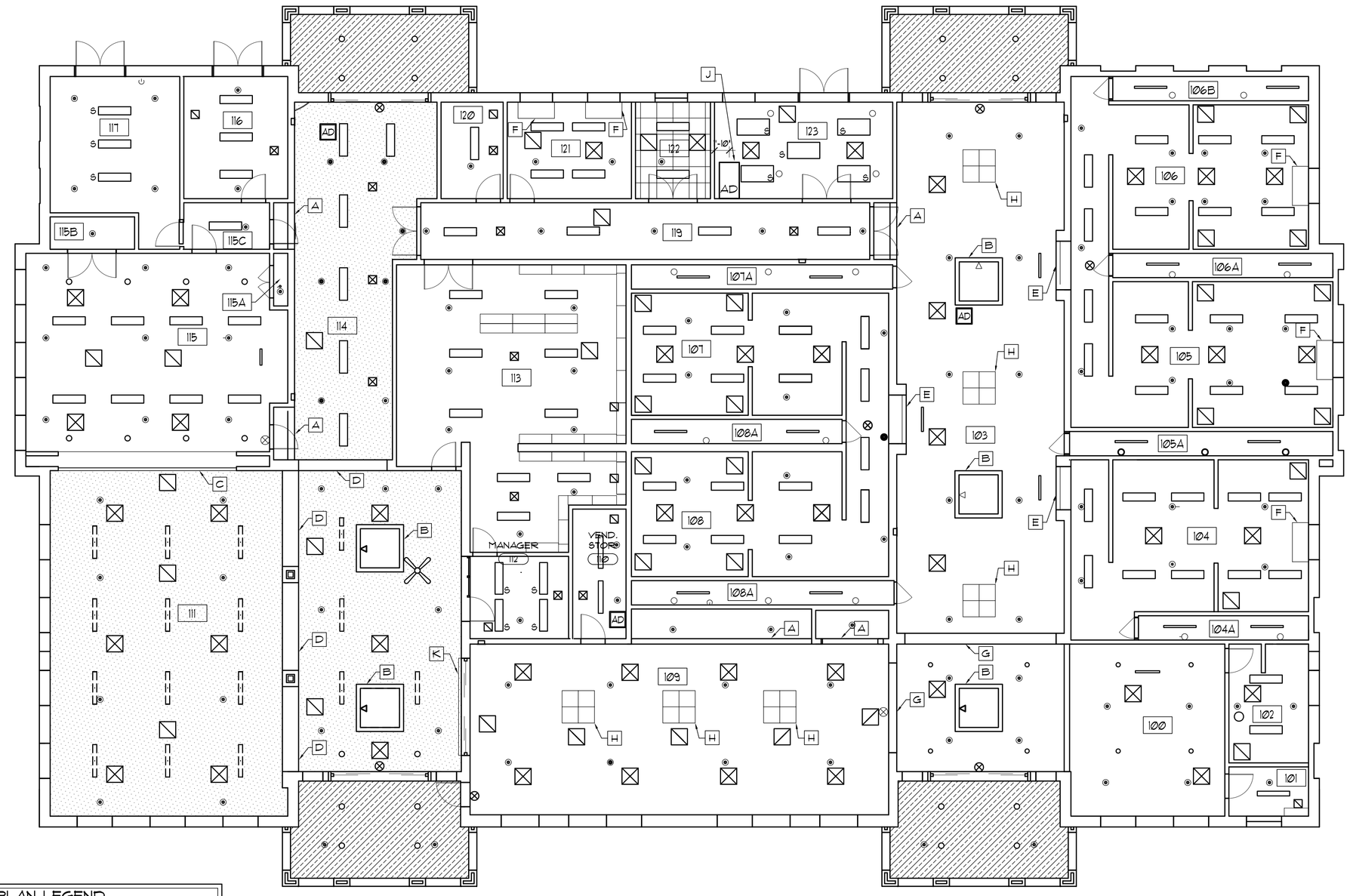

1 | A7.1 | A7.1 REFLECTED CEILING PLAN

SCALE: 1/8" = 1'-0"

PLAN NORTH
N
TRUE NORTH

REFLECTED CLNG PLAN LEGEND

- SURFACE MNTD LIGHTING FIXTURE
- RECESSED LIGHTING FIXTURE
- PENDANT LIGHTING FIXTURE
- RECESSED CAN LIGHT FIXTURE
- EXIT SIGNS
- EXTERIOR GPDW, FNTD
- ACOUSTICAL PLASTER FINISH
- ACOUSTICAL CEILING PANELS
- AD ACCESS DOOR
- MECH DIFFUSERS & RETURN GRILLES SEE MECH.
- CEILING FAN
- CONCEALED PENDANT SPRINKLER HEAD
- UPRIGHT SPRINKLER HEAD
- SIDEWALL SPRINKLER HEAD

GENERAL NOTES

1. LIGHTS & MECH DIFFUSERS/RETURNS ARE SHOWN ON THIS REFLECTED CLG PLAN FOR LOCATION ONLY. SEE ELEC. DWGS FOR LIGHTING & MECH DWGS FOR MECHANICAL ITEMS.
2. ALL CEILINGS ARE GYPSUM BOARD, PAINTED, UNLESS OTHERWISE NOTED. REF: FINISH SCHEDULE ON SHEET A1.1

KEYED CEILING NOTES

A

A. SOFFIT -REF: 2/A7.1
B. SKYLIGHT- REF: 4/A7.1
C. OPERABLE PARTITION- REF: 1/A7.1
D. BULKHEAD- REF: 5/A7.1
E. HEADER-REF:3/A7.1
F. WINDOW POCKET- REF: 6/A7.1
G. CMU HEADER - REF: STRUCT.
H. RECESSED ACOUSTICAL PANELS- CENTERED OVER COLOR SQUARES IN FLOOR PATTERN (REF: 1/A1.3)- REF: 7/A7.1 FOR DETAIL
J. ATTIC ACCESS HATCH - REF 2/A3.1 & SPECIFICATIONS
K. FLUSH CEILING BOX FOR ROLLER SHADE, REF. SECTION 12494 IN PROJECT MANUAL.

0 4' 8' 16'
SCALE: 1/8" = 1'-0"

0 8" 1'-4" 2'-8"
SCALE: 3/4" = 1'-0"

0 4" 8" 1'-4"
SCALE: 1 1/2" = 1'-0"

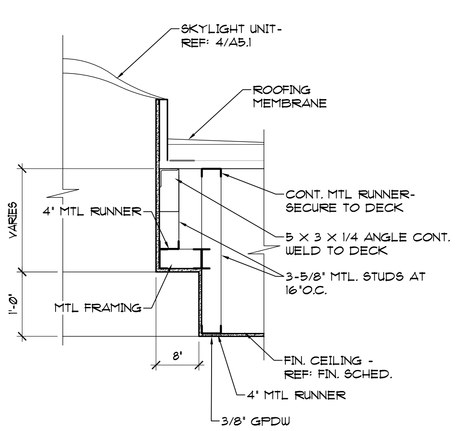

4 | A7.1 | A7.1 SKYLIGHT CEILING RECESS DETAIL

SCALE: 3/4" = 1'-0"

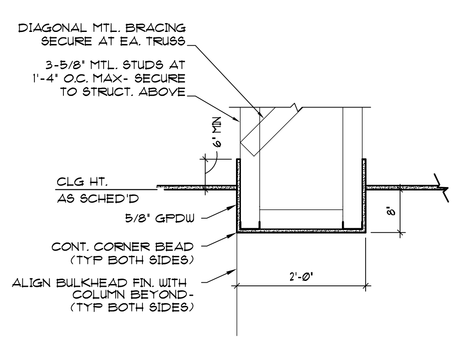

5 | A7.1 | A7.1 GPDW BULKHEAD

SCALE: 3/4" = 1'-0"

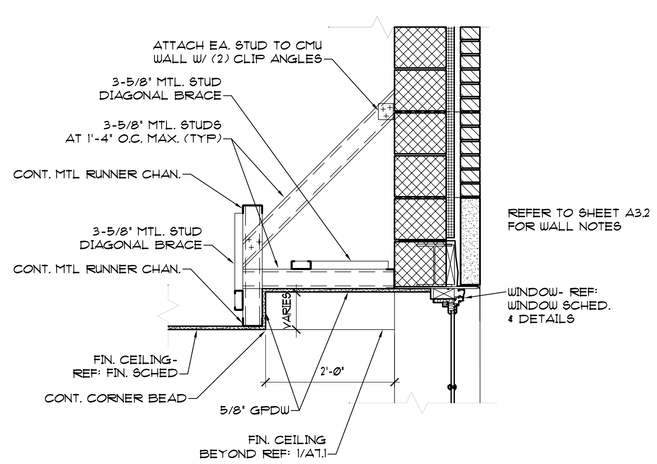

6 | A7.1 | A7.1 GPDW WINDOW POCKET

SCALE: 3/4" = 1'-0"

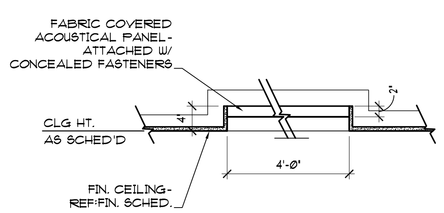

7 | A7.1 | A7.1 RECESSED ACOUSTICAL PANEL

SCALE: 3/4" = 1'-0"

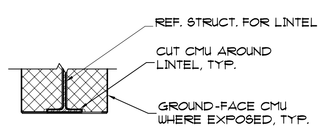

8 | A7.1 | A7.1 CMU HEADER

SCALE: 3/4" = 1'-0"

COMMONWEALTH OF VIRGINIA
James T. Rice
Certificate No. 3935
8/17/06
CERTIFIED ARCHITECT

VIRGINIA DEPT. OF TRANSPORTATION
FREDERICKSBURG SAFETY REST AREA AND WELCOME CENTER
I-95 SOUTH, FREDERICKSBURG, VIRGINIA
PROJECT CODE: 501-06501-007

Rawlings Wilson & Associates
ARCHITECTS PLANNERS
1100 NORTH THOMPSON STREET
RICHMOND, VIRGINIA 23230
(804) 358-9141 FAX(804) 359-5715

SHEET TITLE: REFLECTED CEILING PLAN AND DETAILS

DRAWN	TMC
CHECKED	EJR
RWA NO.	1890.01
DATE	8/17/06

DRAWING NO. A7.1
SHEET ___ OF ___

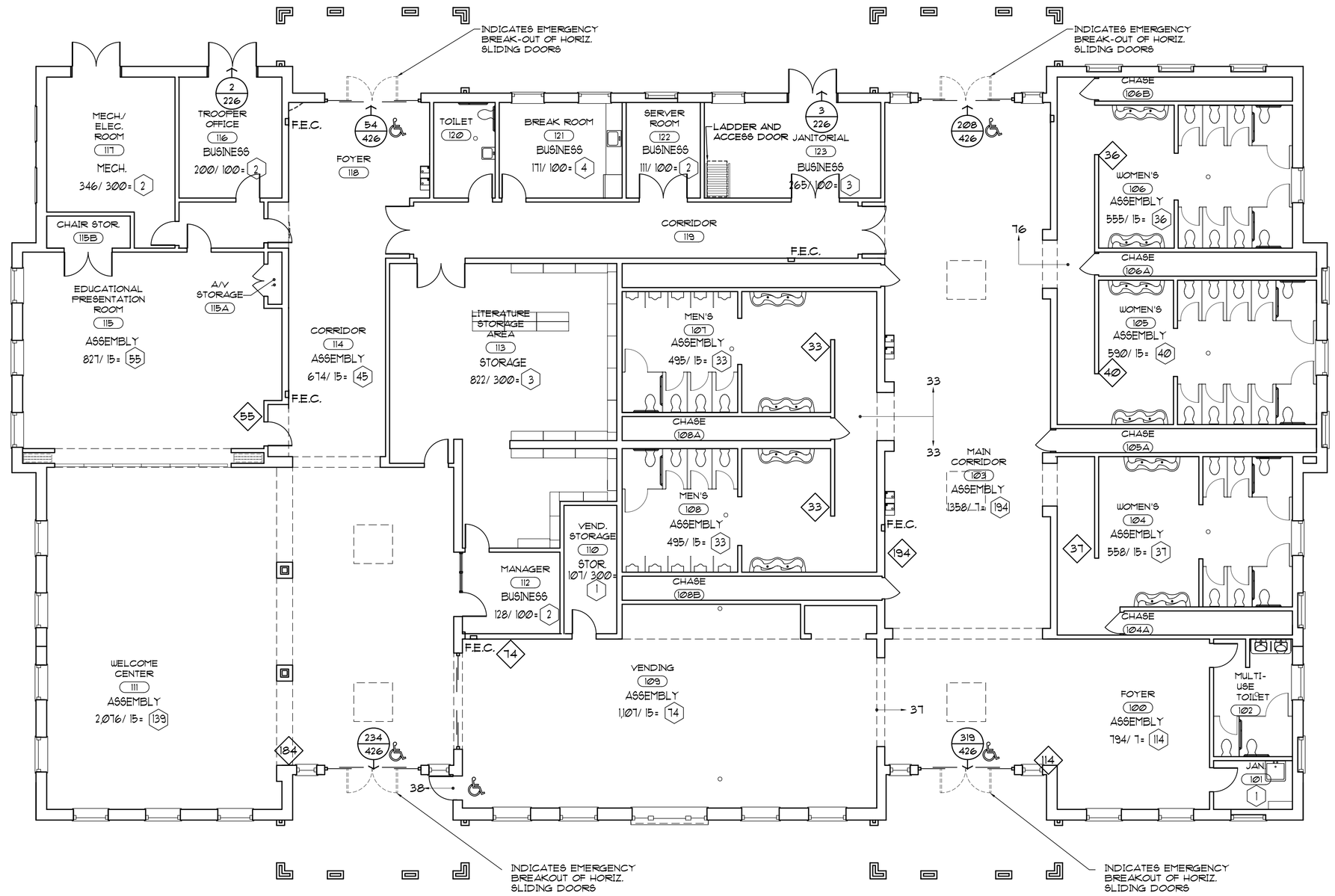

FIRE PROTECTION PLAN

FP1.1 | FP1.1

SCALE: 1/8" = 1'-0"

0 4' 8' 16'

NOTE: REFERENCE COVER SHEET T1.1 FOR CODE INFORMATION

GENERAL NOTE:

1. REFERENCE COVER SHEETS T1.1 FOR ADDITIONAL CODE INFORMATION AND CALCULATIONS
2. THIS BUILDING IS NOT DESIGNED AS AN EMERGENCY SHELTER

FIRE PROTECTION PLAN LEGEND

- (25) OCCUPANT LOAD OF ROOM
- (23 / 110) TOTAL OCCUPANT LOAD PER EXIT / EGRESS WIDTH CAPACITY
- (64) MAX OCCUPANT SIGN LOCATION
- 106 → NUMBER OF OCCUPANTS EGRESSING DIRECTION INDICATED
- ♿ ACCESSIBLE EXIT
- ⊠ ROOF ACCESS DOOR AND LADDER

8 INCHES

NOTICE
FOR YOUR SAFETY
OCCUPANCY
IS LIMITED TO:
XX
PERSONS
BY ORDER OF
THE CODE OFFICIAL
Keep Posted Under Penalty Of Law

10 INCHES

2 OCCUPANCY SIGN

FP1.1 | FP1.1

SCALE: 1/16" = 1'-0"

0 8' 16' 32'

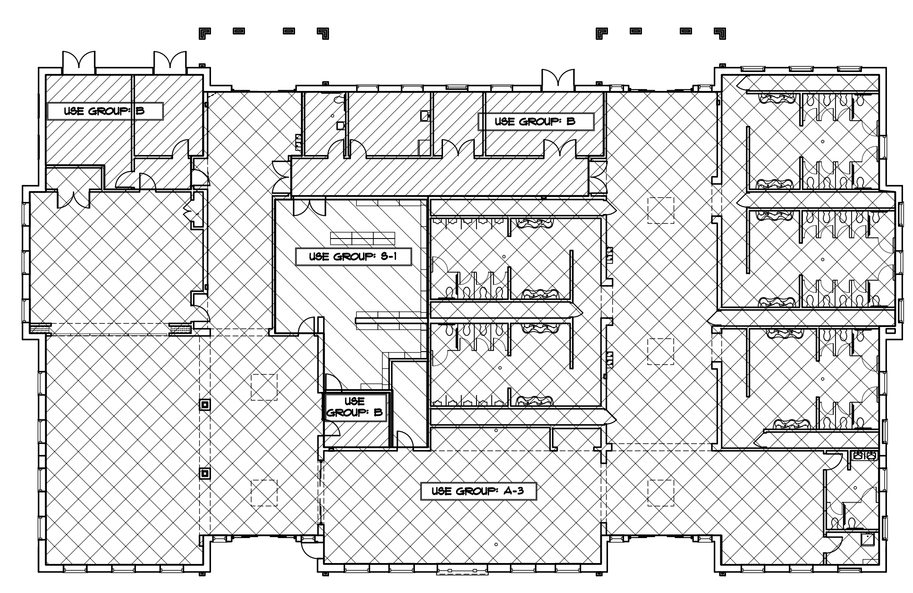

3 USE GROUP PLAN

FP1.1 | FP1.1

SCALE: 1/16" = 1'-0"

0 8' 16' 32'

COMMONWEALTH OF VIRGINIA
James T. Rice
Certificate No. 3939
8/17/06
CERTIFIED ARCHITECT

VIRGINIA DEPT. OF TRANSPORTATION
FREDERICKSBURG SAFETY REST AREA AND WELCOME CENTER
I-95 SOUTH, FREDERICKSBURG, VIRGINIA

PROJECT CODE: 501-06501-007

Rawlings Wilson & Associates
ARCHITECTS PLANNERS
1100 NORTH THOMPSON STREET
RICHMOND, VIRGINIA 23230
(804) 358-9141 FAX(804) 359-5715

SHEET TITLE: FIRE PROTECTION PLAN

DRAWN	TMC
CHECKED	EJR
RWA NO.	1890.01
DATE	8/17/06

DRAWING NO. FP1.1

SHEET ___ OF ___

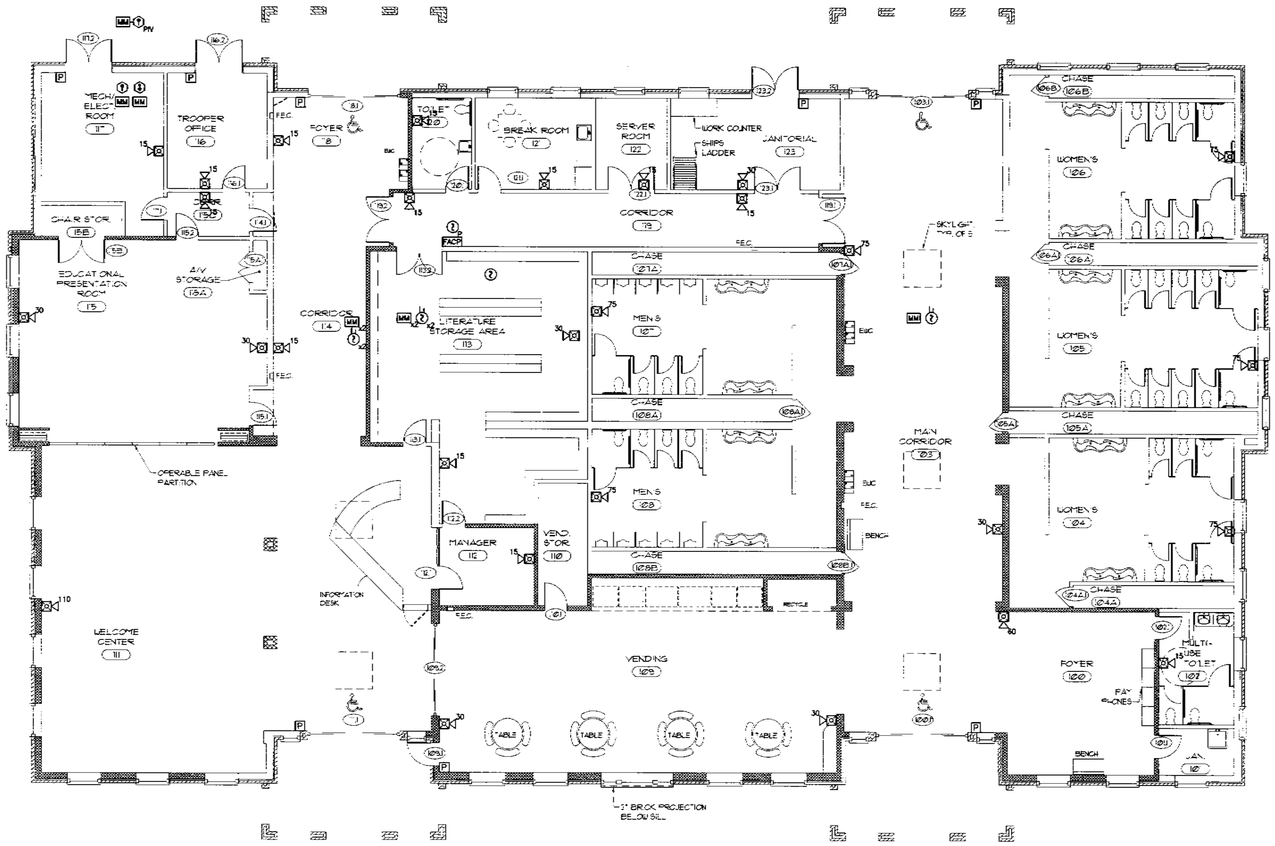

PLAN NORTH

FIRE ALARM PLAN

SCALE: 1/8"=1'-0"

GENERAL NOTES:

1. APPLICABLE CODES:
   - A. IBC, THE INTERNATIONAL BUILDING CODE, 2003 ED.
   - B. VIRGINIA UNIFORM STATEWIDE BUILDING CODE, 2003 ED.
   - C. NFPA 70, NATIONAL ELECTRICAL CODE (NEC), 2002 ED.
   - D. NFPA 72, NATIONAL FIRE ALARM CODE, 1999 ED.
   - E. ALL CODES/STANDARDS REFERENCED IN A. THROUGH D.
2. POWER SUPPLIES
   - A. AMP DRAW AND VOLTAGE DROP CALCULATIONS SHALL BE PERFORMED BY INSTALLING CONTRACTOR.
   - B. ALL WIRE AND CABLE ABOVE FINISHED CEILING SHALL BE INSTALLED IN CONDUIT.
3. WIRING
   - A. ALL WIRE INSTALLED BELOW 7 FEET MUST BE INSTALLED IN RACEWAY UNLESS NOTED OTHERWISE.
   - B. PLENUM GRADE FIRE ALARM CABLE MAY BE INSTALLED ABOVE FINISHED CEILINGS WITHOUT CONDUIT.
   - C. ALL WIRING IN MECHANICAL AND EQUIPMENT ROOMS SHALL BE IN CONDUIT.
   - D. ALL WIRING SHALL BE INSTALLED AS FOLLOWS:
     1. SLCs – CLASS B, STYLE 4
     2. IDCs – CLASS B, STYLE C
     3. NACs – CLASS B, STYLE Y

FIRE ALARM SYMBOL LEGEND:

	WALL MOUNTED COMBINATION HORN/STROBE (CANDELA RATING AS INDICATED)
P	MANUAL PULL STATION
S	SMOKE DETECTOR
T	TAMPER SWITCH
F	WATER FLOW SWITCH
FACP	FIRE ALARM CONTROL PANEL
MM	MONITOR MODULE
RAP	REMOTE ANNUNCIATOR PANEL
DACT	DIGITAL ALARM COMMUNICATOR
P	PHOTOELECTRIC
P/V	POST INDICATOR VALVE
D	DUCT SMOKE DETECTOR

GRAPHIC SCALE(S):

1/8"=1'-0" 0' 5' 10' 15' 24'

Drawings Prepared By:

Hughes Associates, Inc.
Fire Science and Engineering
3610 Commerce Drive, Suite 817
Baltimore, MD 21227-1652
Phone: 410.737.8677
Fax: 410.737.8688

HAI Project No. 2163-000

COMMONWEALTH OF VIRGINIA
ALISON WAKELIN
No. 37705
8/17/06
PROFESSIONAL ENGINEER

Rawlings Wilson & Associates
ARCHITECTS PLANNERS
1100 NORTH THOMPSON STREET
RICHMOND, VIRGINIA 23230
(804) 358-9141 FAX(804) 359-5715

VIRGINIA DEPT. OF TRANSPORTATION
FREDRICKSBURG SAFETY REST AREA AND WELCOME CENTER
I-95 SOUTH, FREDRICKSBURG, VIRGINIA

PROJECT CODE: 501-06501-007

SHEET TITLE: FIRE ALARM PLAN NOTES AND LEGEND

DRAWN	-
CHECKED	-
RWA NO.	189001
DATE	08/17/06

DRAWING NO. F1.1

SHEET ___ OF ___

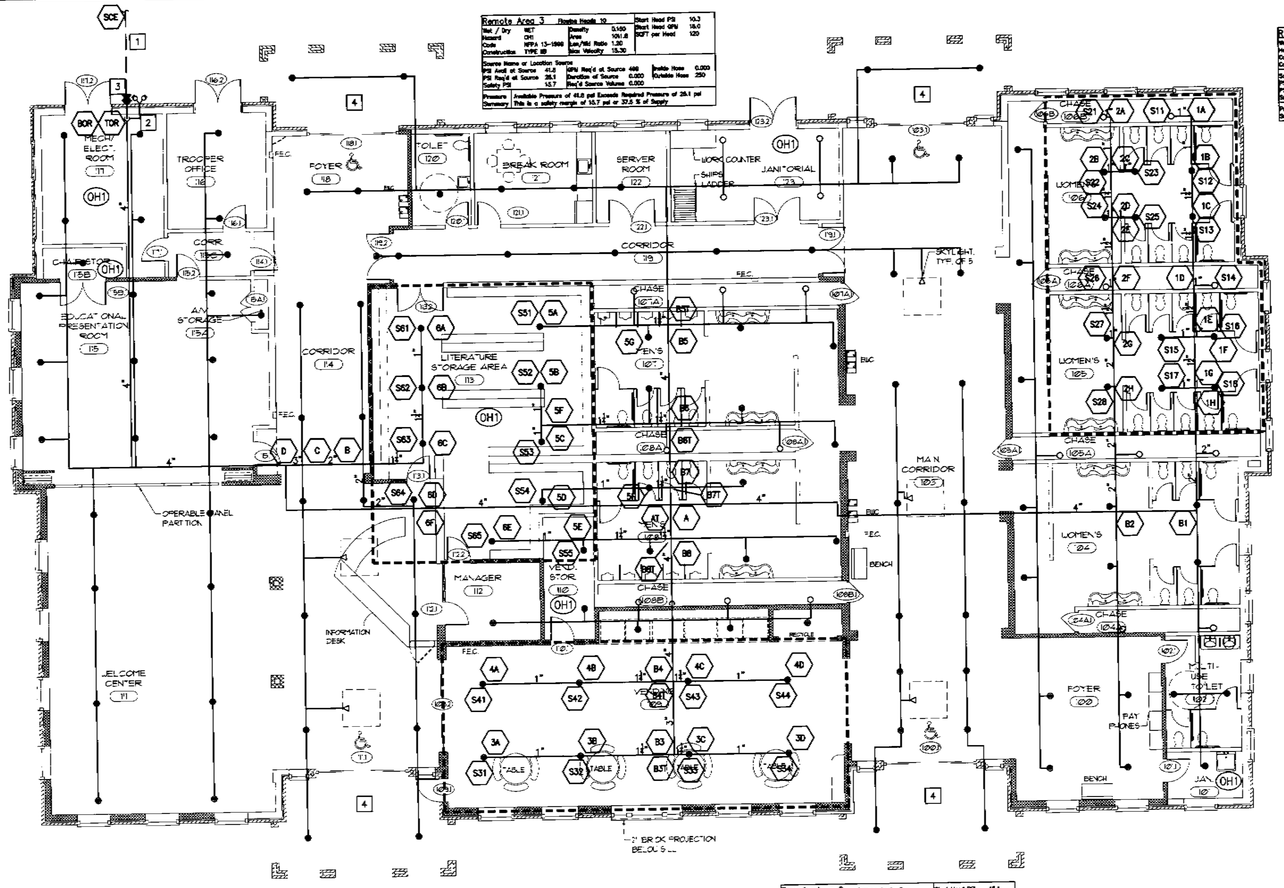

Remote Area 3	Flowing Heads 10		Start Head PSI 10.3
Wet / Dry WET	Density 0.100		Start Head GPM 16.0
Hazard OH1	Area 1011.8		SQFT per Head 120
Code NFPA 13-1999	Lgth/Wdth Ratio 1.30		
Construction TYPE III	Max Velocity 15.30		
Source Name or Location Source			
PSI Avail at Source 41.0	GPM Req'd at Source 480	Inside Hose 0.000	
PSI Req'd at Source 35.1	Duration of Source 0.000	Outside Hose 250	
Safety PSI 13.7	Req'd Source Volume 0.000		
Pressure Summary	Available Pressure of 41.0 psi Exceeds Required Pressure of 35.1 psi This is a safety margin of 15.7 psi or 37.5 % of Supply		

Remote Area 1	Flowing Heads 13		Start Head PSI 7.00
Wet / Dry WET	Density 0.100		Start Head GPM 14.5
Hazard LIGHT	Area 1040		SQFT per Head 182
Code NFPA 13-1999	Lgth/Wdth Ratio 1.30		
Construction TYPE III	Max Velocity 18.0		
Source Name or Location Source			
PSI Avail at Source 44.6	GPM Req'd at Source 378	Inside Hose 0.000	
PSI Req'd at Source 24.5	Duration at Source 0.000	Outside Hose 100	
Safety PSI 9.5	Req'd Source Volume 0.000		
Pressure Summary	Available Pressure of 44.0 psi Exceeds Required Pressure of 34.5 psi This is a safety margin of 9.5 psi or 21.5 % of Supply		

Remote Area 2	Flowing Heads 8		Start Head PSI 16.1
Wet / Dry WET	Density 0.100		Start Head GPM 22.0
Hazard LIGHT	Area 1108.5		SQFT per Head 133
Code NFPA 13-1999	Lgth/Wdth Ratio 1.20		
Construction TYPE III	Max Velocity 15.30		
Source Name or Location Source			
PSI Avail at Source 46.3	GPM Req'd at Source 292	Inside Hose 0.000	
PSI Req'd at Source 38.0	Duration at Source 0.000	Outside Hose 100	
Safety PSI 8.3	Req'd Source Volume 0.000		
Pressure Summary	Available Pressure of 46.3 psi Exceeds Required Pressure of 38.0 psi This is a safety margin of 8.3 psi or 17.9 % of Supply		

PLAN NORTH

SPRINKLER PLAN
SCALE: 1/8"=1'-0"

SHEET NOTES:

1. 8" (INCH) FIRE SERVICE MAIN. SEE CIVIL DRAWINGS FOR CONTINUATION AND LOCATION OF POST INDICATOR VALVE.
2. VERTICALLY ORIENTED REDUCED PRESSURE PRINCIPLE BACKFLOW PREVENTION ASSEMBLY AND ALARM CHECK VALVE. SEE SHEET F4.1.
3. PROVIDE WALL HYDRANT FOR TESTING BACK FLOW PREVENTER.
4. PROVIDE DRY PENDENT SPRINKLERS FOR SPRINKLERS LOCATED IN EXTERIOR ENTRANCE OVERHANGS.

OCCUPANCY HAZARD LEGEND:

* ALL AREAS ARE LIGHT HAZARD UNLESS NOTED OTHERWISE. 0.10 GPM/SQ. FT.

(OH1) ORDINARY HAZARD GROUP 1 - 0.15 GPM/SQ. FT.

SPRINKLER LEGEND:

- OVERHEAD SPRINKLER PIPING
- UNDERGROUND PIPING
- EXTENT OF SPRINKLER SYSTEM
- OS&Y GATE VALVE
- CHECK VALVE
- FIRE DEPARTMENT CONNECTION
- PIPE TEE
- CHANGE IN ELEVATION - TEE DOWN
- PIPE ELBOW
- CHANGE IN ELEVTION - ELBOW DOWN
- PIPE UP
- SYSTEM RISER
- NIPPLE AND CAP - FLUSHING CONNECTION
- WALL HYDRANT
- FDC — FIRE DEPARTMENT CONNECTION
- BFP — BACKFLOW PREVENTER
- CONCEALED PENDENT SPRINKLER
- PENDENT SPRINKLER
- SIDEWALL SPRINKLER
- RECESSED DRY SPRINKLERS

SPRINKLER COUNT:

SYM	CNT	TYPE	FINISH	TEMP	K	NOT
○	21	Q.R. PENDENT	CHROME	155	5.6	1/2
●	124	Q.R. CONCEALED	BRONZE	155	5.6	1/2
▽	5	Q.R. SIDEWALL	CHROME	155	5.6	1/2
●	8	Q.R. RECESSED DRY	CHROME	155	5.6	1/2

GENERAL NOTES:

1. THE SCOPE OF WORK INCLUDES:
   - PROVIDING COMPLETE SPRINKLER PROTECTION FOR THE BUILDING.
   - PROVIDING QUICK RESPONSE SPRINKLERS (158 TOTAL).
   - PROVIDING CONCEALED SPRINKLERS IN ALL GYPSUM BOARD CEILINGS.
   - INSTALL NEW 6 INCH RPZ BACKFLOW PREVENTION DEVICE.
2. SPRINKLER SYSTEM DESIGN AND INSTALLATION SHALL COMPLY WITH NFPA 13, 1999 EDITION AND THE VIRGINIA UNIFORM STATEWIDE BUILDING CODE, 2003 EDITION.
3. CONTRACTOR SHALL MAKE PROVISIONS TO ENSURE ADEQUATE DRAINAGE OF ALL PIPING IN ACCORDANCE WITH NFPA 13.
4. SYSTEM SHALL BE DESIGNED AS LIGHT AND ORDINARY HAZARD. THE DESIGN AREA SHALL BE REDUCED BY 35.5%, 28%, AND 40% RESPECTIVELY DUE TO PROVISION OF QUICK RESPONSE SPRINKLERS AND THE CEILING HEIGHT REDUCTION ALLOWANCE.
5. THE SYSTEM SHALL BE HYDRAULICALLY CALCULATED. CALCULATIONS SHALL BEGIN AT THE LOCATION OF THE WATER FLOW TEST.
6. SPRINKLERS SHALL BE INSTALLED WITH THEIR DEFLECTORS PARALLEL TO THE CEILING IN ACCORDANCE WITH NFPA 13.
7. ONLY LISTED AND APPROVED DEVICES AND MATERIALS AS SPECIFIED IN NFPA 13 SHALL BE INSTALLED THROUGHOUT THE SYSTEM, UNLESS OTHERWISE NOTED.
8. ONLY LISTED AND APPROVED NEW SPRINKLERS SHALL BE EMPLOYED IN THE INSTALLATION OF THE SPRINKLER SYSTEM.
9. THESE DRAWINGS ARE DIAGRAMMATIC IN NATURE AND ARE NOT INTENDED TO SHOW THE EXACT LOCATIONS OF COMPONENTS, NOR SHOW ALL SYSTEM COMPONENTS. CONTRACTOR SHALL PROVIDE ADDITIONAL OFFSETS OR FITTINGS REQUIRED FOR PROPER INSTALLATION, COORDINATION WITH OTHER TRADES, AND/OR TO MAINTAIN PROPER CLEARANCES. CONTRACTOR SHALL ALSO VERIFY STRUCTURAL, MECHANICAL, AND ELECTRICAL INSTALLATIONS AND DRAWINGS TO AVOID OBSTRUCTIONS OR INTERFERENCE WITH FIRE PROTECTION PIPING AND SPRINKLERS.
10. THE LOCATION OF THE DRAIN RISER AND DRAIN DISCHARGE SHALL BE COORDINATED WITH THE OWNER'S REPRESENTATIVE.
11. EXPOSED PIPING SHALL NOT BE PERMITTED, UNLESS SPECIFICALLY APPROVED IN WRITING BY THE OWNERS REPRESENTATIVE (EXCEPT IN AREAS WITH NO FINISHED CEILING).
12. ADEQUATE CLEARANCE, AS DEFINED BY NFPA 13, SHALL BE PROVIDED BETWEEN SPRINKLERS AND HEAT GENERATING DEVICES.
13. ALL PENETRATIONS THROUGH FIRE RESISTANCE RATED ASSEMBLIES SHALL BE SLEEVED AND SEALED WITH AN UNDERWRITERS LABORATORIES (UL) LISTED FIRE STOPPING SYSTEM.
14. ALL CORE DRILLING SHALL BE COORDINATED WITH STRUCTURAL ENGINEER.
15. ENTIRE SYSTEM SHALL BE FLUSHED AND HYDROSTATICALLY TESTED @ 200 PSI FOR 2 HOURS AS PER NFPA 13.
16. REFER TO PROJECT SPECIFICATIONS FOR ADDITIONAL REQUIREMENTS AND INFORMATION.
17. ALL PIPE SIZES INDICATED ON DRAWINGS ARE APPROXIMATE. ACTUAL PIPE SIZES SHALL BE DETERMINED VIA HYDRAULIC CALCULATIONS BY CONTRACTOR.
18. THE COMPONENTS OF HANGER ASSEMBLIES THAT DIRECTLY ATTACH TO THE PIPE OR TO THE BUILDING SHALL BE LISTED.
19. SPRINKLER CONTRACTOR SHALL COORDINATE WITH FIRE ALARM CONTRACTOR FOR CONNECTION TO FIRE ALARM SYSTEM AND TRANSMISSION TO CENTRAL STATION.
20. PROVIDE SPRINKLER CABINET AND SPARE SPRINKLERS IN ACCORDANCE WITH NFPA 13.

GRAPHIC SCALE(S):

1/8"=1'-0" 0' 5' 10' 15' 24'

Drawings Prepared By:
Hughes Associates, Inc.
Fire Science and Engineering
3613 Commerce Drive, Suite 317
Baltimore, MD 21227-1652
Phone: 410.737.8677
Fax: 410.737.8686
HAI Project No. 2163-000

COMMONWEALTH OF VIRGINIA
ALLISON WAKELIN
No. 37705
8/17/06
PROFESSIONAL ENGINEER

Rawlings Wilson & Associates
ARCHITECTS PLANNERS
1100 NORTH THOMPSON STREET
RICHMOND, VIRGINIA 23230
(804) 358-9141 FAX(804) 358-5715

VIRGINIA DEPT. OF TRANSPORTATION
FREDRICKSBURG SAFETY REST AREA AND WELCOME CENTER
I-95 SOUTH, FREDRICKSBURG, VIRGINIA
PROJECT CODE: 501-06501-007

SHEET TITLE: SPRINKLER PLAN NOTES AND LEGEND

DRAWN	-
CHECKED	-
RWA NO.	1890.01
DATE	08/17/06

DRAWING NO. F2.1
SHEET ___ OF ___

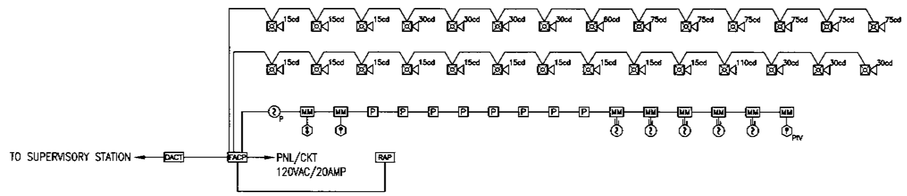

FIRE ALARM RISER DIAGRAM

SCALE: 1/8" = 1'

INPUT \ OPERATION	ALARM SIGNAL AT FACP AND ANNUNCIATOR	TROUBLE SIGNAL AT FACP AND ANNUNCIATOR	SUPERVISORY SIGNAL AT FACP AND ANNUNCIATOR	TRANSMIT ALARM TO MONITORING STATION	TRANSMIT TROUBLE SIGNAL TO MONITORING STATION	TRANSMIT SUPERVISORY SIGNAL TO MONITORING STATION	ACTIVATE BUILDING ALARM NOTIFICATION APPLIANCES	SHUTDOWN HVAC ROOF TOP UNITS
GENERAL SYSTEM SMOKE DETECTOR	●			●			●	
DUCT SMOKE DETECTOR	●			●			●	●
MANUAL PULL STATION	●			●			●	
SPRINKLER WATERFLOW SWITCH	●			●			●	
TAMPER SWITCH			●			●		
LOSS OF AC VOLTAGE		●			●			
BATTERY BACK-UP TROUBLE		●			●			

FIRE ALARM SEQUENCE OF OPERATIONS

SCALE: 1/8" = 1'

Drawings Prepared By:

Hughes Associates, Inc.
Fire Science and Engineering
3610 Commerce Drive, Suite 817
Baltimore, MD 21227-1652
Phone: 410.737.8677
Fax: 410.737.8688

HAI Project No. 2163-000

COMMONWEALTH OF VIRGINIA
ALISON WAKELIN
No. 37705
8/17/06
PROFESSIONAL ENGINEER

VIRGINIA DEPT. OF TRANSPORTATION
FREDRICKSBURG SAFETY REST AREA AND WELCOME CENTER
I-95 SOUTH, FREDRICKSBURG, VIRGINIA

PROJECT CODE: 501-06501-007

Rawlings Wilson & Associates
ARCHITECTS PLANNERS
1109 NORTH THOMPSON STREET
RICHMOND, VIRGINIA 23230
(804) 358-9141 FAX(804) 359-5715

SHEET TITLE: FIRE ALARM RISER SEQ. OF OPERATIONS

DRAWN -
CHECKED -
RWA NO. 189001
DATE 08/17/06

DRAWING NO. F3.1
SHEET ___ OF ___

WATER SUPPLY DATA:

Hydraulic Information		System Volume	98.6
Static Pressure	TBC	Flow Test Date	
Residual Pressure	TBC	Flow Test Location	
Residual Flow	TBC	Tested by	
Test Elevation (Relative to Source Elevation)	0.000		
Tank Pressure	0.000	Available Well Flow	0.000
Tank Volume	0.000		
Tank Elevation	0'-0"		
Pump Rated Pressure	0.000	Pump Manufacturer	
Pump Rated Flow	0.000	Pump Model	
Pump Elevation	0'-0"		
Construction	NON COMBUSTIBLE, TYPE IIB		
Authorities Having Jurisdiction	BCOM		

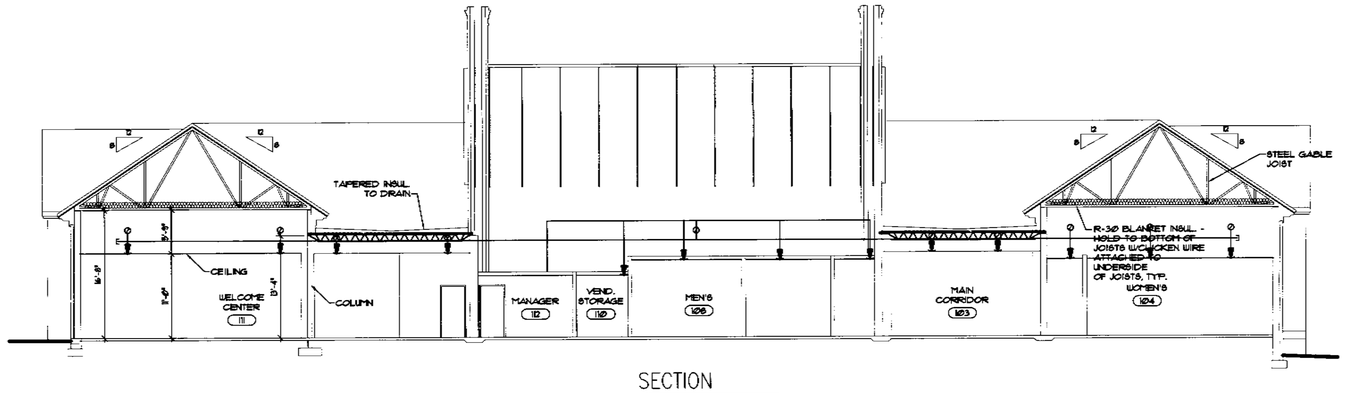

SECTION

SCALE = 1/8" = 1'-0"

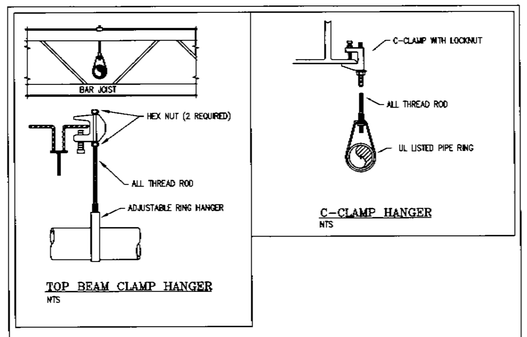

TOP BEAM CLAMP HANGER

NTS

C-CLAMP HANGER

NTS

SPACING BETWEEN HANGERS (STEEL PIPES)											
NOMINAL PIPE SIZE (in.)	1"	1-1/4"	1-1/2"	2"	2-1/2"	3"	3-1/2"	4"	5"	6"	8"
STEEL PIPE SCHEDULE 10	N/A	N/A	N/A	N/A	15-0	15-0	15-0	15-0	15-0	15-0	15-0
STEEL PIPE SCHEDULE 40	12-0	12-0	15-0	15-0	N/A	N/A	N/A	N/A	N/A	N/A	N/A

TYPICAL STEEL PIPE HANGER DETAILS

SCALE = NONE

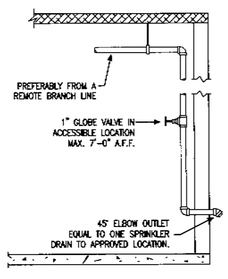

INSPECTOR'S TEST CONNECTION

SCALE = N.T.S.

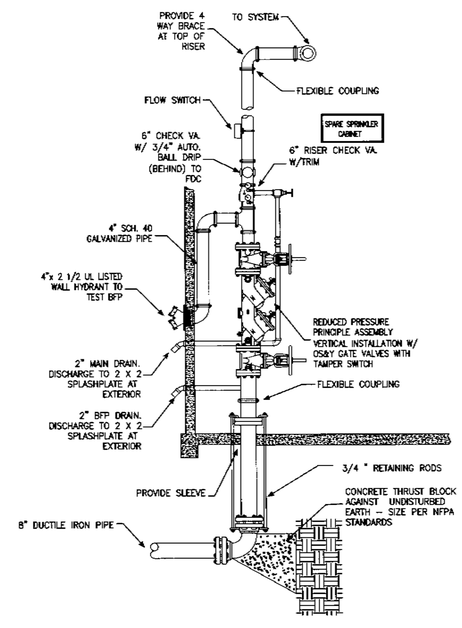

WET PIPE SPRINKLER RISER DETAIL 2 (F2.1 | F4.1)

SCALE = N.T.S.

Drawings Prepared By:

Hughes Associates, Inc.
Fire Science and Engineering
3610 Commerce Drive, Suite 817
Baltimore, MD 21227-1652
Phone: 410.737.8677
Fax: 410.737.8688

HAI Project No. 2163-000

COMMONWEALTH OF VIRGINIA
ALISON WAKELIN
No. 37705
8/17/06
PROFESSIONAL ENGINEER

Rawlings Wilson & Associates
ARCHITECTS PLANNERS
1100 NORTH THOMPSON STREET
RICHMOND, VIRGINIA 23230
(804) 358-8141 FAX(804) 359-5715

VIRGINIA DEPT. OF TRANSPORTATION
FREDRICKSBURG SAFETY REST AREA AND WELCOME CENTER
I-95 SOUTH, FREDRICKSBURG, VIRGINIA

PROJECT CODE: 501-06501-007

SHEET TITLE: SPRINKLER SECTION AND DETAILS

DRAWN	-
CHECKED	-
RWA NO.	189001
DATE	08/17/06

DRAWING NO. F4.1

SHEET ___ OF ___

STRUCTURAL ABBREVIATIONS

ACI	–	AMERICAN CONCRETE INSTITUTE
AFF	–	ABOVE FINISH FLOOR
AISC	–	AMERICAN INSTITUTE OF STEEL CONSTRUCTION
ARCH	–	ARCHITECTURAL
ASTM	–	AMERICAN SOCIETY FOR TESTING AND MATERIALS
BM	–	BEAM
CJ	–	CONTROL JOINT
CLR	–	CLEARANCE
CMU	–	CONCRETE MASONRY UNIT
COL	–	COLUMN
CONC	–	CONCRETE
CONT	–	CONTINUOUS
DIA	–	DIAMETER
DWGS	–	DRAWINGS
EA	–	EACH
EL	–	ELEVATION
EMBED	–	EMBEDMENT
ERV	–	ENERGY RECOVERY VENTILATOR
EXIST	–	EXISTING
EW	–	EACH WAY
FIN	–	FINISH
g	–	GRAVITY
GA	–	GAGE
GALV	–	GALVANIZED
HORZ	–	HORIZONTAL
HS	–	HIGH STRENGTH
HVAC	–	HEATING VENTILATING & COOLING
LL	–	LIVE LOAD
MFG	–	MANUFACTURER
MAX	–	MAXIMUM
MECH	–	MECHANICAL
MPH	–	MILES PER HOUR
MIN	–	MINIMUM
NO	–	NUMBER
OC	–	ON CENTER
PSF	–	POUNDS PER SQUARE FOOT
PSI	–	POUNDS PER SQUARE INCH
REINF	–	REINFORCEMENT
REQD	–	REQUIRED
RTU	–	ROOF TOP UNIT
SPA	–	SPACES
SS	–	STAINLESS STEEL
STD	–	STANDARD
STIFF	–	STIFFENER
TOF	–	TOP OF FOOTING
TYP	–	TYPICAL
UFC	–	UNIFIED FACILITIES CRITERIA
UON	–	UNLESS OTHERWISE NOTED
VERT	–	VERTICAL
WWF	–	WELDED WIRE FABRIC
@	–	AT
ø	–	DIAMETER
±	–	PLUS/MINUS
&	–	AND

STRUCTURAL LEGEND

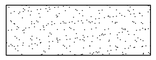
– CONCRETE SURFACE

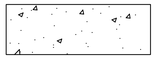
– CONCRETE SECTION

– STEEL PLATE

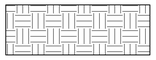
– COMPACTED FILL OR VIRGIN SOIL

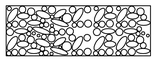
– COARSE AGGREGATE

GENERAL STRUCTURAL NOTES

1. ALL WORK TO BE DONE IN ACCORDANCE WITH THE VIRGINIA UNIFORM STATEWIDE BUILDING CODE (VUSBC) 2003 EDITION.

2. SPECIAL INSPECTIONS ARE REQUIRED BY THE VIRGINIA UNIFORM STATEWIDE BUILDING CODE. REFER TO SECTION 01400 OF THE SPECIFICATIONS FOR THE GENERAL INSPECTION REQUIREMENTS. THE FOLLOWING IS A LIST OF ITEMS REQUIRING SPECIAL INSPECTION. REFER TO THE REFERENCED SPECIFICATION SECTION FOR THE SPECIAL REQUIREMENTS OF EACH ITEM. THE INDEPENDENT INSPECTION AGENCY ENGAGED BY THE OWNER SHALL REVIEW THE TEST PROCEDURES AND INSPECTIONS WITH THE STRUCTURAL ENGINEER OF RECORD, THE GENERAL CONTRACTOR AND THE OWNER PRIOR TO CONDUCTING TESTS AND INSPECTIONS.

A. EARTHWORK	–	SECTION 02200
B. CAST-IN-PLACE CONCRETE	–	SECTION 03300
C. ARCHITECTURAL PRECAST CONCRETE	–	SECTION 03450
D. UNIT MASONRY ASSEMBLIES	–	SECTION 04200
E. STRUCTURAL STEEL	–	SECTION 05120
F. COLD FORMED METAL FRAMING	–	SECTION 05400
G. STEEL JOISTS	–	SECTION 05210
H. STEEL DECKS	–	SECTION 05310

3. LOADS

A. ROOF LIVE LOAD	20 PSF
B. SNOW LOADS	
1. GROUND SNOW LOAD, Pg	20 PSF
2. FLAT ROOF SNOW LOAD, Pf	22 PSF
3. SNOW EXPOSURE FACTOR, Ce	0.9
4. SNOW LOAD IMPORTANCE FACTOR, Is	1.1
5. THERMAL FACTOR, Ct	1.0
C. WIND LOADS	
1. BASIC WIND SPEED (3-SECOND GUST)	90 MPH
2. WIND IMPORTANCE FACTOR, Iw	1.15
3. BUILDING CATEGORY	III
4. WIND EXPOSURE	B
5. INTERNAL PRESSURE COEFFICIENT	± 0.18
D. SEISMIC DESIGN DATA	
1. SEISMIC IMPORTANCE FACTOR, I_E	1.25
2. SEISMIC USE GROUP	I
3. MAPPED SPECTRAL RESPONSE ACCEL., S_1	0.182g
4. MAPPED SPECTRAL RESPONSE ACCEL., S_s	0.055g
5. SITE CLASS	D
6. SPECTRAL RESPONSE COEFFICIENT, S_{DS}	0.194g
7. SPECTRAL RESPONSE COEFFICIENT, S_{D1}	0.088g
8. SEISMIC DESIGN CATEGORY	B
9. SEISMIC-FORCE RESISTING SYSTEM	ORDINARY REINFORCED MASONRY SHEAR WALLS
10. DESIGN BASE SHEAR	140 k
11. SEISMIC RESPONSE COEFFICIENT, Cs	0.097
12. RESPONSE MODIFICATION FACTOR, R	2 1/2
13. ANALYSIS PROCEDURE USED	EQUIVALENT LATERAL FORCE PROCEDURE
E. SLAB-ON-GRADE	100 PSF

4. ALL CONCRETE WORK SHALL CONFORM TO ALL REQUIREMENTS OF ACI 318-02 "BUILDING CODE REQUIREMENTS FOR STRUCTURAL CONCRETE."

CONCRETE COMPRESSIVE STRENGTH	4000 PSI (CAST-IN-PLACE) 5000 PSI PRECAST (MIN)
REINFORCING STEEL	ASTM A615M GRADE 60

5. ALL STRUCTURAL STEEL WORK SHALL CONFORM TO THE REQUIREMENTS OF AISC "SPECIFICATIONS FOR STRUCTURAL STEEL BUILDINGS ALLOWABLE STRESS DESIGN AND PLASTIC DESIGN" DATED JUNE 1, 1989.

STRUCTURAL STEEL (UON)	ASTM A36 (MIN)
WIDE FLANGE BEAMS	ASTM A992
WELDING ELECTRODES	E70XX SERIES

6. ALL STRUCTURAL COLD FORMED METAL FRAMING SHALL CONFORM TO THE LATEST EDITION OF "SPECIFICATION FOR DESIGN OF COLD-FORMED STEEL STRUCTURAL MEMBERS". ALL STUDS, JOISTS AND ACCESSORIES SHALL BE GALVANIZED STEEL AS SHOWN ON THE DRAWINGS, AND SHALL BE DESIGNED BY A LIGHT GAGE SPECIALTY ENGINEER. PROVIDE CALCULATIONS WITH SHOP DRAWINGS ACCORDING TO THE SPECIFICATIONS. ALL MEMBERS INDICATED ON THE DRAWINGS ARE MINIMUM SIZES AND ARE BASED ON A "CSJ" DESIGNATION WITH A 1 5/8 INCH FLANGE WIDTH. DESIGN YIELD STRENGTHS ARE AS FOLLOWS:

Fy=33 KSI FOR 20 AND 18 GAGE (MIN)
Fy=50 KSI FOR 16 AND 12 GAGE

PUNCH OUTS SHALL NOT BE LOCATED WITHIN 10 INCHES OF END OF MEMBER OR INSIDE FACE OF SUPPORT. PROVIDE BRIDGING IN ACCORDANCE WITH MANUFACTURER RECOMMENDATIONS AND AT 4'-0" (MAX) ON CENTER FOR UNBRACED COMPRESSION FLANGES.

COLD FORMED METAL ROOF TRUSSES SHALL BE FABRICATED BY A TRUSS MANUFACTIRER FOR THE LOADS LISTED BELOW.

TOP CHORD LIVE LOAD	–	20 PSF
TOP CHORD DEAD LOAD	–	10 PSF
BOTTOM CHORD LIVE LOAD	–	20 PSF
BOTTOM CHORD DEAD LOAD	–	10 PSF

TOP AND BOTTOM CHORDS SHALL BE 18 GAGE STEEL (MIN.). THE TRUSS MANUFACTURER SHALL DESIGN AND PROVIDE ALL TRUSS BRACING, CONNECTIONS AND BEARING ANCHORAGE.

7. ALL MASONRY WORK SHALL CONFORM TO THE REQUIREMENTS OF (ACI 530/ASCE 5/TMS 402) "BUILDING CODE REQUIREMENTS FOR MASONRY STRUCTURES" AND (ACI 530.1/ASCE 6/TMS 602) "SPECIFICATIONS FOR MASONRY STRUCTURES" LATEST ADDITION.

BLOCK	ASTM C90
MORTAR	ASTM C270
GROUT	ASTM C476
MASONRY STRENGTH	f'm = 1500 PSI

HOLLOW MASONRY WALLS THAT CHANGE IN THICKNESS OR NUMBER OF WYTHES SHALL HAVE A COURSE OF SOLID MASONRY OR GROUT FILLED UNITS AT THE TRANSITION.

COLLAR JOINTS	SOLID FILL COLLAR JOINTS WITH MORTAR AS THE JOB PROGRESSES

8. ALL OPEN WEB JOISTS WORK SHALL CONFORM TO THE S.J.I. "STANDARD SPECIFICATIONS FOR OPEN WEB STEEL JOISTS". OPEN WEB STEEL JOISTS ARE NOT DESIGNED FOR CONCENTRATED LOADS EXCEPT AT PANEL POINTS. WHEN HANGING OR SETTING LOADS EXCEEDING 150 POUNDS, EITHER PLACE THE LOAD AT A PANEL POINT OR WELD IN FIELD A 2"x 2"x 3/16" ANGLE FROM THE POINT OF LOAD TO THE NEAREST PANEL POINT ON THE OPPOSITE CHORD. SUBMIT CALCULATIONS AND APPLICABLE SHOP DRAWINGS ON ALL SPECIAL DESIGN OPEN WEB JOISTS, SEALED BY A REGISTERED PROFESSIONAL ENGINEER, FOR REVIEW PRIOR TO FABRICATION.

9. ALL STRUCTURES SHALL BE SUPPORTED ON SPREAD FOOTINGS BEARING ON EITHER VIRGIN SOIL OR CONTROLLED COMPACTED FILL WITH AN ALLOWABLE SOIL BEARING CAPACITY OF 3,000 PSF AS INDICATED IN FROEHLING AND ROBERTSON'S GEOTECHNICAL ENGINEERING REPORT DATED JUNE 2006

AUSTIN BROCKENBROUGH & ASSOCIATES, L.L.P.
Consulting Engineers
P.O. Box 4800 Chester, Virginia 23831

COMMONWEALTH OF VIRGINIA
GERALD CHARLES DZIEDZIC
No.031616
8/17/06
PROFESSIONAL ENGINEER

VIRGINIA DEPT. OF TRANSPORTATION
FREDERICKSBURG SAFETY REST AREA AND WELCOME CENTER
I-95 SOUTH, FREDERICKSBURG, VIRGINIA

PROJECT CODE: 501-06501-007

Rawlings Wilson & Associates
ARCHITECTS PLANNERS
1100 NORTH THOMPSON STREET
RICHMOND, VIRGINIA 23230
(804) 358-6141 FAX(804) 359-5715

SHEET	STRUCTURAL NOTES
TITLE	ABBREVIATIONS & LEGEND

DRAWN	RTH
CHECKED	GCD
RWA NO.	1890.01
DATE	8/17/06

DRAWING NO. S0.1
SHEET ___ OF ___

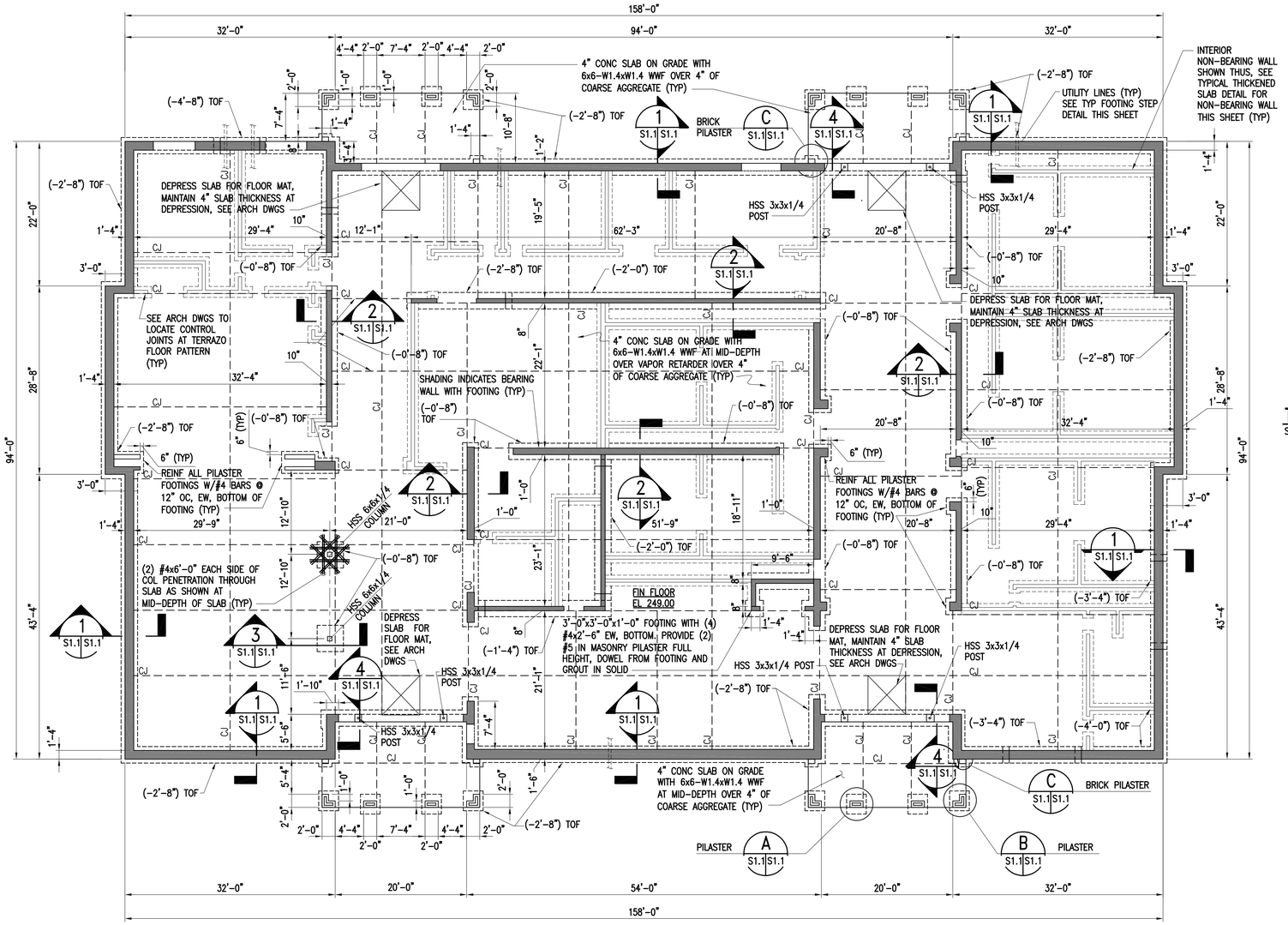

FOUNDATION PLAN
SCALE: 1/8"=1'-0"

NOTES:

1. TOP OF ALL EXTERIOR WALL FOOTINGS, FOOTINGS SHALL BE LOCATED (-2'-8") BELOW FINISHED FLOOR ELEVATION 249.00, UNLESS OTHERWISE NOTED ON PLAN. STEP FOUNDATION AS REQUIRED FOR UNDERGROUND UTILITIES. COORDINATE WITH ALL DISCIPLINES. SEE TYPICAL FOOTING STEP DETAIL ON THIS SHEET FOR ADDITIONAL DETAILS.
2. SEE SHEET S3.2 FOR TYPICAL MASONRY WALL REINFORCING DETAILS.

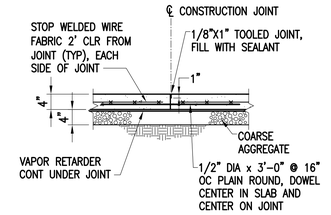

TYPICAL SLAB CONSTRUCTION JOINT
SCALE: 3/4"=1'-0"

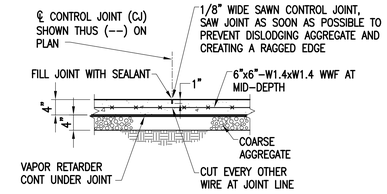

TYPICAL CONTROL JOINT AND TYPICAL SLAB DETAIL
SCALE: 3/4"=1'-0"

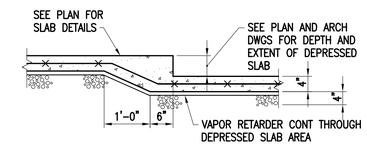

TYPICAL SLAB DEPRESSION
SCALE: 3/4"=1'-0"

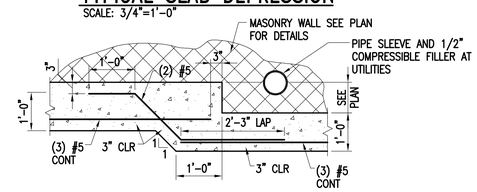

TYPICAL FOOTING STEP DETAIL
SCALE: 3/4"=1'-0"

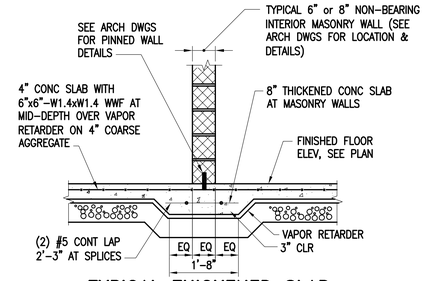

TYPICAL THICKENED SLAB AT INTERIOR PARTITION WALLS
SCALE: 3/4"=1'-0"

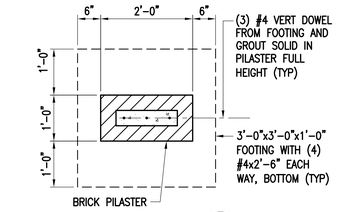

PILASTER A
SCALE: 3/4"=1'-0" S1.1 S1.1

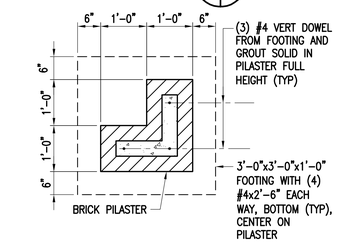

PILASTER B
SCALE: 3/4"=1'-0" S1.1 S1.1

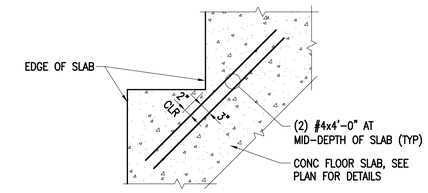

TYPICAL SLAB REINF AT RE-ENTRANT CORNERS
SCALE: 3/4"=1'-0"

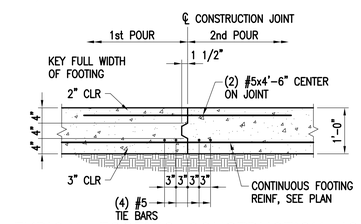

TYPICAL FOOTING CONSTRUCTION JOINT
SCALE: 3/4"=1'-0"

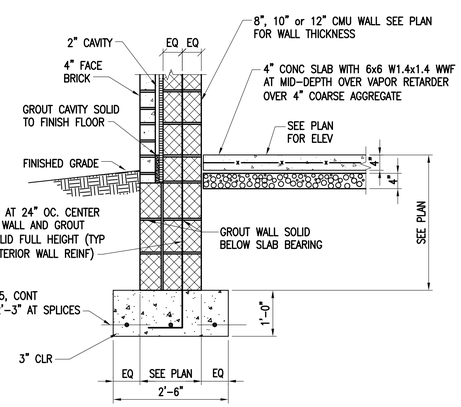

SECTION 1
SCALE: 3/4"=1'-0" S1.1 S1.1

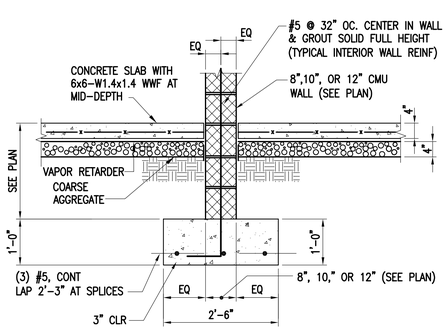

SECTION 2
SCALE: 3/4"=1'-0" S1.1 S1.1

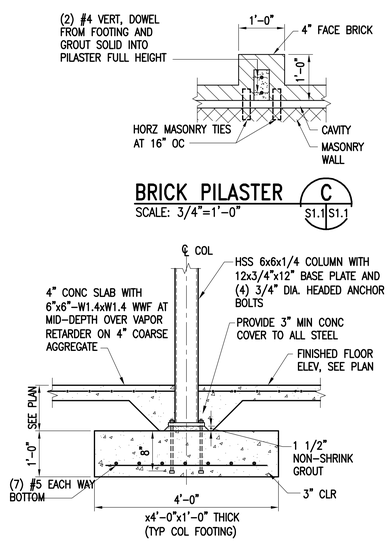

BRICK PILASTER C
SCALE: 3/4"=1'-0" S1.1 S1.1

SECTION 3
SCALE: 3/4"=1'-0" S1.1 S1.1

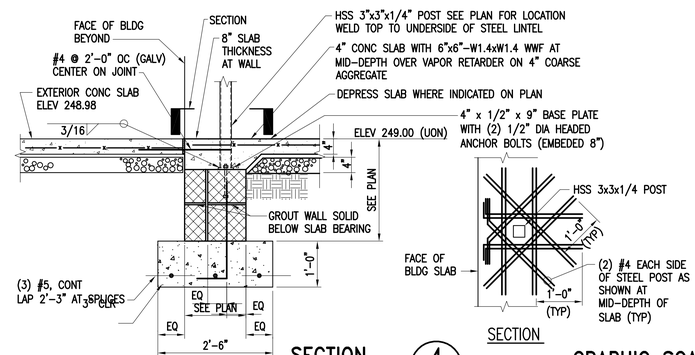

SECTION 4
SCALE: 3/4"=1'-0" S1.1 S1.1

GRAPHIC SCALE(S):

1/8"=1'-0" 0' 5' 10' 15' 24'

3/4"=1'-0" 1' 0 1' 2' 3'

AUSTIN BROCKENBROUGH & ASSOCIATES, L.L.P.
Consulting Engineers
P.O. Box 4800 Chester, Virginia 23831

COMMONWEALTH OF VIRGINIA
GERALD CHARLES DZIEDZIC
No.031616
8/17/06
PROFESSIONAL ENGINEER

VIRGINIA DEPT. OF TRANSPORTATION
FREDERICKSBURG SAFETY REST AREA AND WELCOME CENTER
I-95 SOUTH, FREDERICKSBURG, VIRGINIA

PROJECT CODE: 501-06501-007

Rawlings Wilson & Associates
ARCHITECTS PLANNERS
1100 NORTH THOMPSON STREET
RICHMOND, VIRGINIA 23230
(804) 358-9141 FAX(804) 359-5715

SHEET FOUNDATION PLAN
TITLE AND DETAILS

DRAWN	RTH
CHECKED	GCD
RWA NO.	189001
DATE	8/17/06

DRAWING NO. S1.1
SHEET ___ OF ___

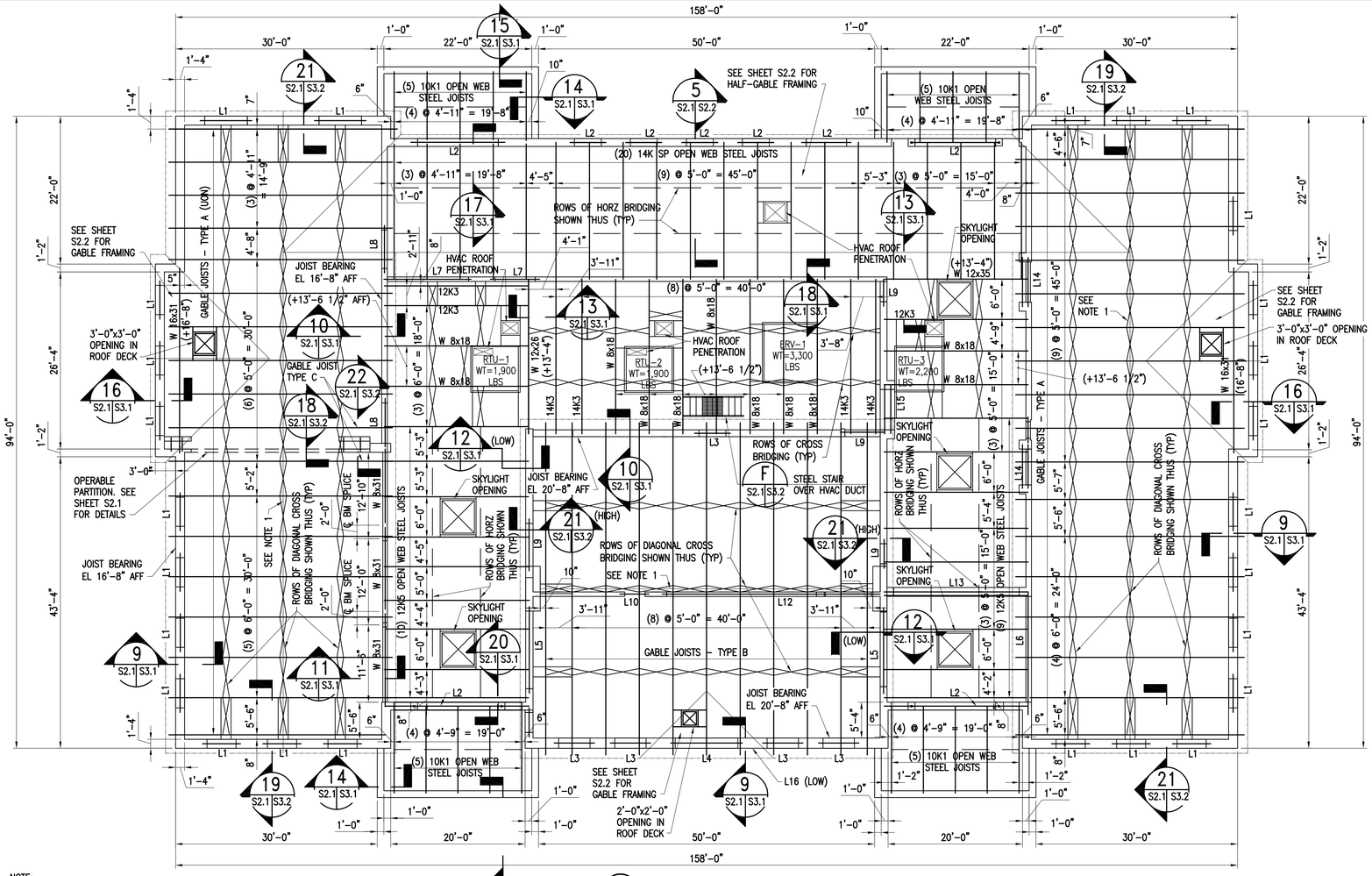

NOTE:

1. REMOVE DIAGONAL BRIDGING AT RIDGE LINE FOR THESE THREE BAYS ONLY AFTER DECK HAS BEEN INSTALLED AND ALL PERMANENT CONNECTIONS TO MASONRY WALLS HAVE BEEN COMPLETED. REPLACE THIS DIAGONAL BRIDGING WITH HORIZONTAL TOP CHORD AND BOTTOM CHORD BRIDGING.
2. BEAM ELEVATIONS (+XX'-X") INDICATE THE DISTANCE TO THE TOP OF THE BEAM ABOVE FINISHED FLOOR ELEVATION 249.00'.

ROOF PLAN
SCALE: 1/8"=1'-0"

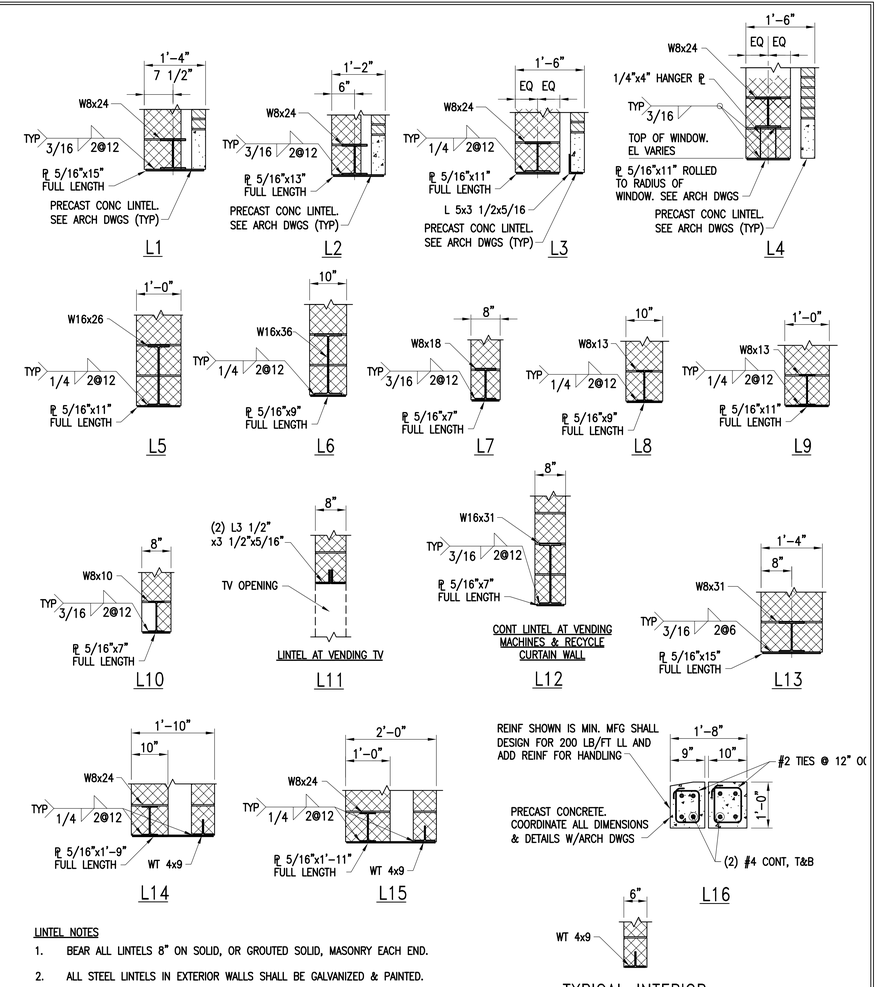

LINTEL NOTES

1. BEAR ALL LINTELS 8" ON SOLID, OR GROUTED SOLID, MASONRY EACH END.
2. ALL STEEL LINTELS IN EXTERIOR WALLS SHALL BE GALVANIZED & PAINTED.
3. LINTELS EXPOSED TO VIEW AT INTERIOR WALLS SHALL BE PAINTED.
4. FOR LINTELS NOT SHOWN (SUCH AS THOSE REQUIRED FOR MECH DUCTS), USE A SIMILAR LINTEL TYPE SHOWN ABOVE FOR THE SIMILAR WALL TYPE AND SPAN LENGTH.

LINTEL SCHEDULE
NO SCALE

TYPICAL INTERIOR PARTITION WALL LINTEL

AUSTIN BROCKENBROUGH & ASSOCIATES, L.L.P.
Consulting Engineers
P.O. Box 4800 Chester, Virginia 23831

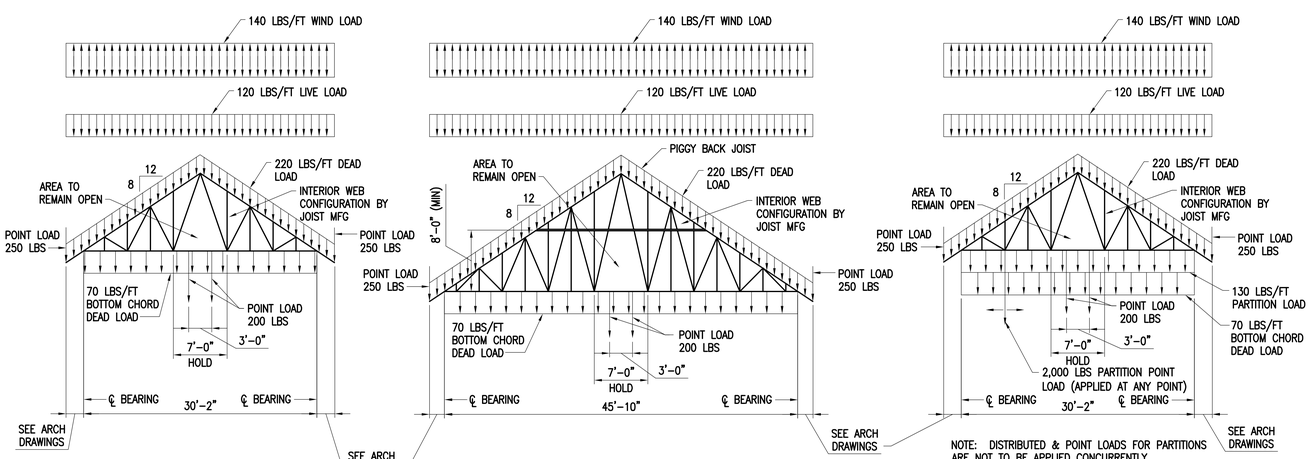

GABLE STEEL JOIST TYPE A LOAD DIAGRAM
NO SCALE

GABLE STEEL JOIST TYPE B LOAD DIAGRAM
NO SCALE

GABLE STEEL JOIST TYPE C LOAD DIAGRAM
NO SCALE

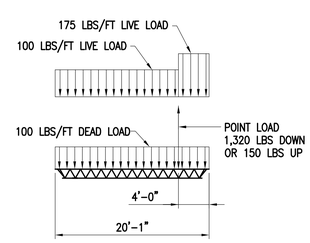

14K SP OPEN WEB STEEL JOIST LOAD DIAGRAM
NO SCALE

GRAPHIC SCALE(S):

1/8"=1'-0" 0' 5' 10' 15' 24'

3/4"=1'-0" 1' 0 1' 2' 3'

COMMONWEALTH OF VIRGINIA
GERALD CHARLES DZIEDZIC
No. 031616
8/17/06
PROFESSIONAL ENGINEER

VIRGINIA DEPT. OF TRANSPORTATION
FREDERICKSBURG SAFETY REST AREA AND WELCOME CENTER
I-95 SOUTH, FREDERICKSBURG, VIRGINIA
PROJECT CODE: 501-06501-007

Rawlings Wilson & Associates
ARCHITECTS PLANNERS
1100 NORTH THOMPSON STREET
RICHMOND, VIRGINIA 23230
(804) 358-9141 FAX(804) 359-5715

SHEET	ROOF PLAN
TITLE	AND DETAILS
DRAWN	RTH
CHECKED	GCD
RWA NO.	1890.01
DATE	8/17/06
DRAWING NO.	S2.1
SHEET ___ OF ___	

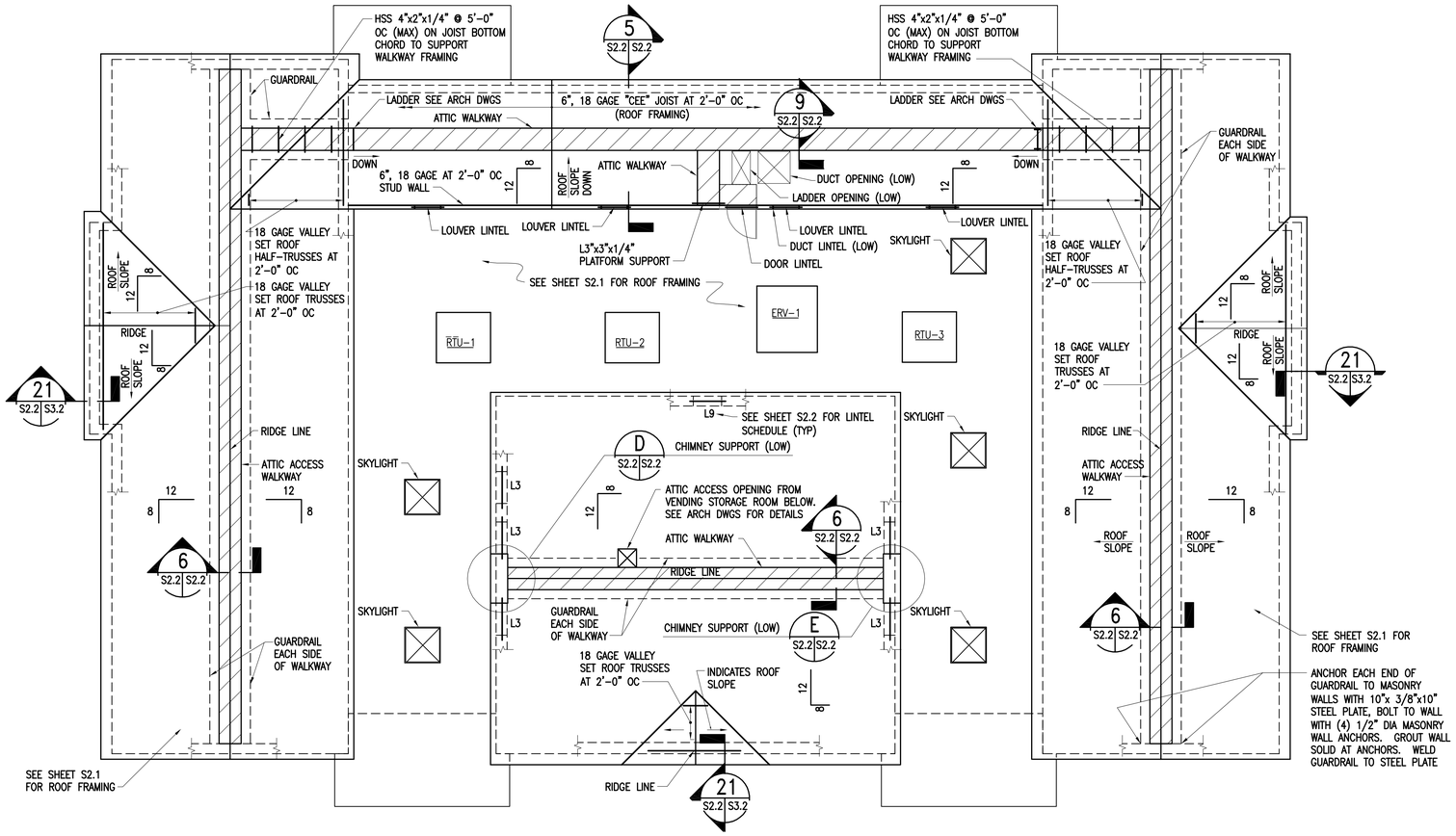

COLD FORMED METAL ROOF PLAN

SCALE: 1/8"=1'-0"

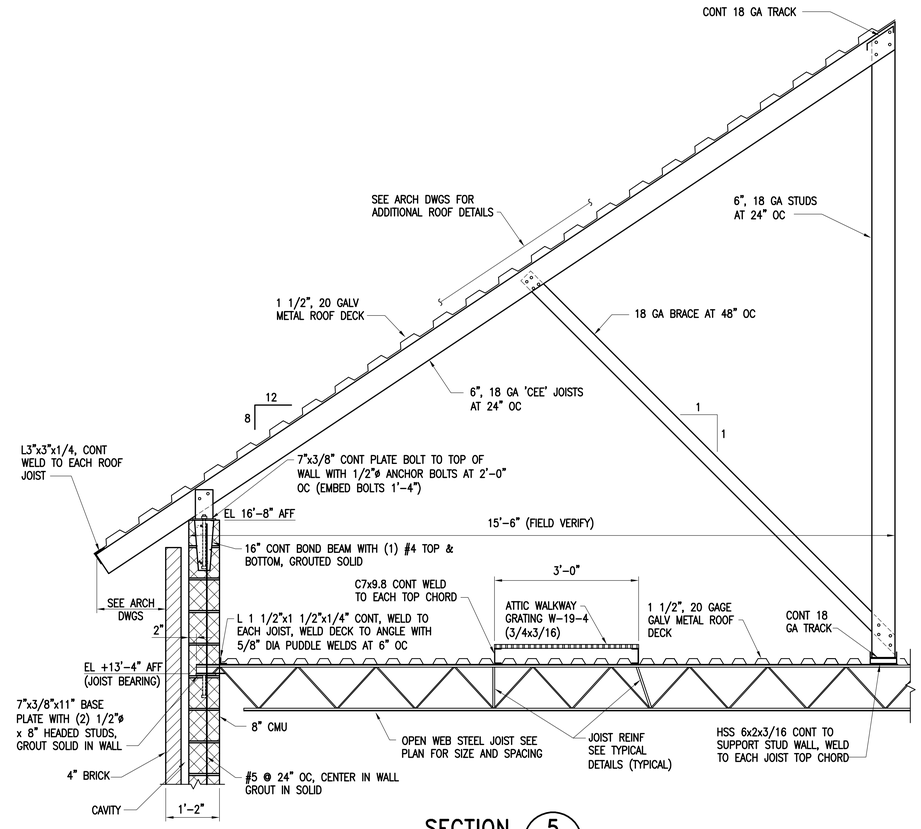

SECTION 5

3/4"=1'-0" S2.1,S2.2 S2.2

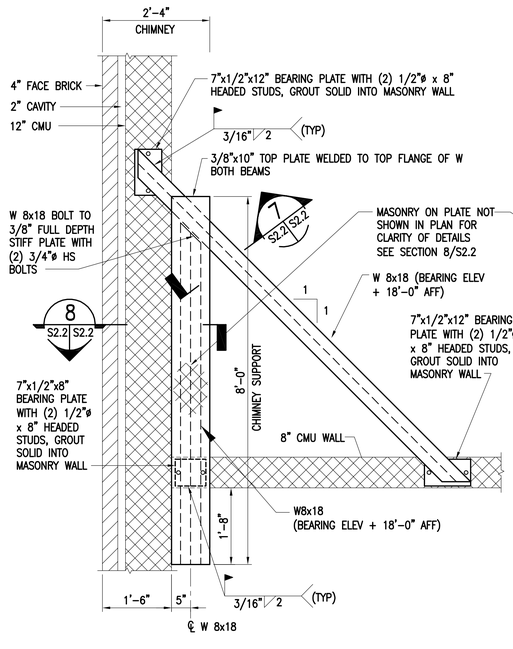

CHIMNEY SUPPORT PLAN DETAIL D

3/4"=1'-0" S2.2 S2.2

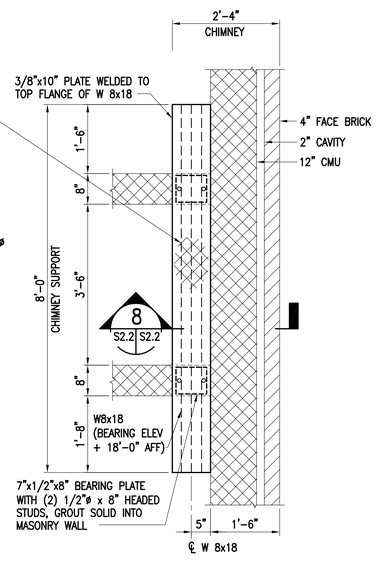

CHIMNEY SUPPORT PLAN DETAIL E

3/4"=1'-0" S2.2 S2.2

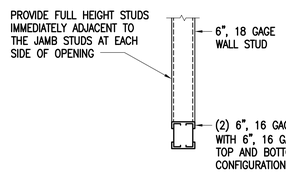

TYPICAL LOUVER AND DOOR LINTEL AT HALF GABLE STUD WALL

3/4"=1'-0"

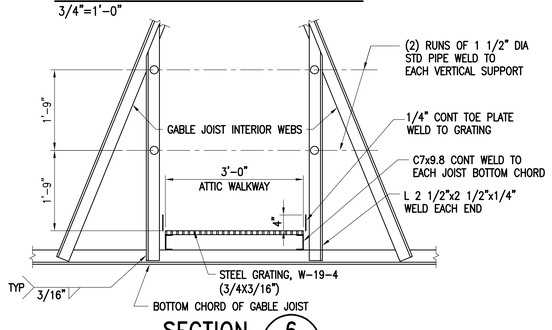

SECTION 6

NO SCALE S2.2 S2.2

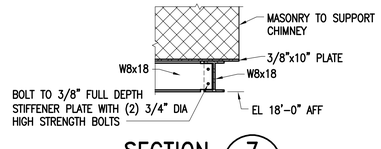

SECTION 7

3/4"=1'-0" S2.2 S2.2

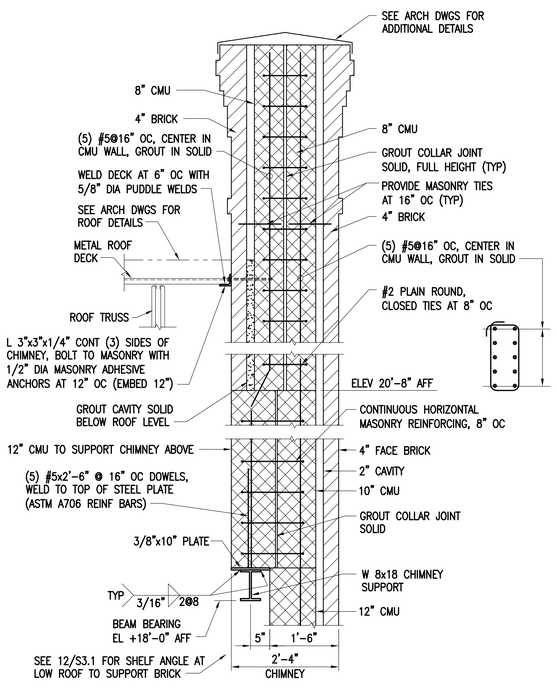

SECTION 8

3/4"=1'-0" S2.2 S2.2

GRAPHIC SCALE(S):

1/8"=1'-0" 0' 5' 10' 15' 24'

3/4"=1'-0" 1' 0 1' 2' 3'

AUSTIN BROCKENBROUGH & ASSOCIATES, L.L.P.
Consulting Engineers
P.O. Box 4800 Chester, Virginia 23831

COMMONWEALTH OF VIRGINIA
GERALD CHARLES DZIEDZIC
No.031616
8/17/06
PROFESSIONAL ENGINEER

Rawlings Wilson & Associates
ARCHITECTS PLANNERS
1100 NORTH THOMPSON STREET
RICHMOND, VIRGINIA 23230
(804) 358-9141 FAX(804) 359-5715

VIRGINIA DEPT. OF TRANSPORTATION
FREDERICKSBURG SAFETY REST AREA AND WELCOME CENTER
I-95 SOUTH, FREDERICKSBURG, VIRGINIA
PROJECT CODE: 501-06501-007

SHEET TITLE	COLD FORMED METAL ROOF PLAN
DRAWN	RTH
CHECKED	GCD
RWA NO.	1890.01
DATE	8/17/06
DRAWING NO.	S2.2
SHEET ___ OF ___	

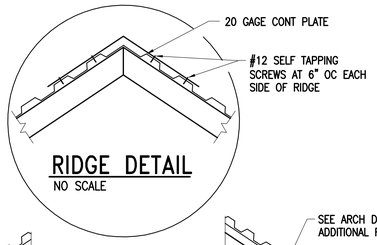

RIDGE DETAIL
NO SCALE

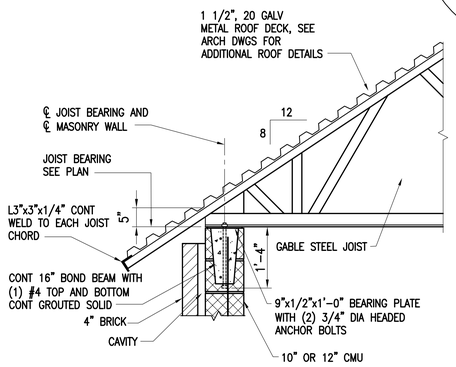

SECTION 9
3/4"=1'-0" S2.1 S3.1

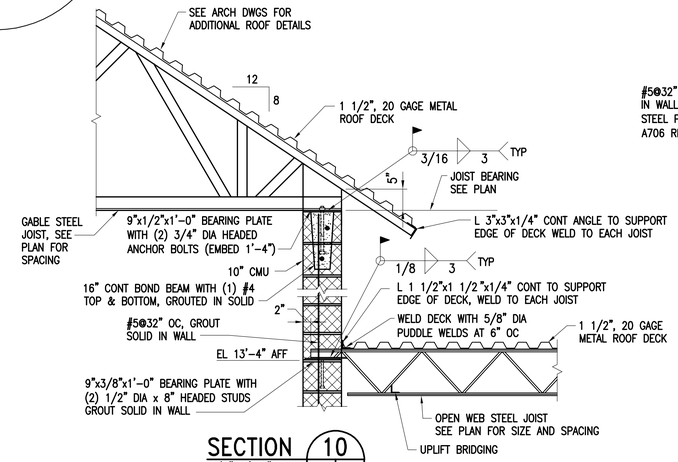

SECTION 10
3/4"=1'-0" S2.1 S3.1

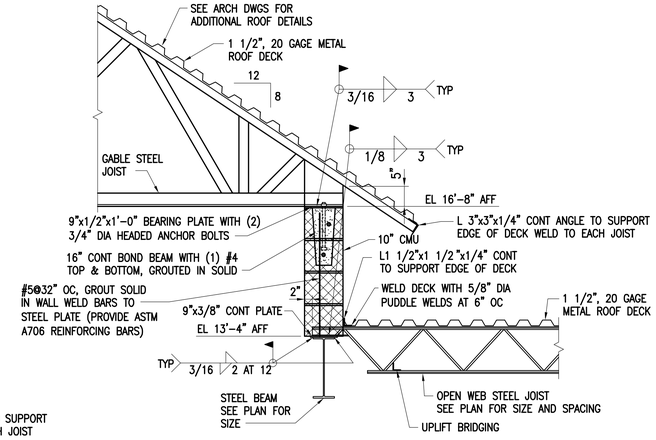

SECTION 11
3/4"=1'-0" S2.1 S3.1

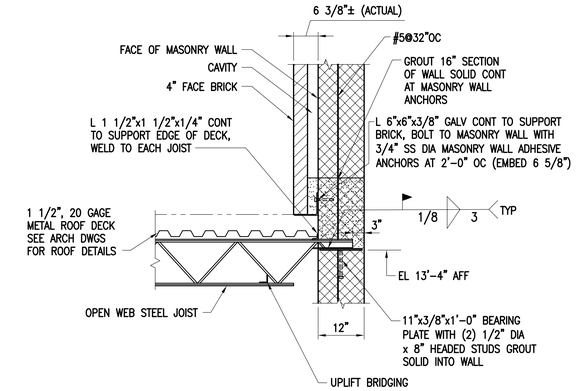

SECTION 12
3/4"=1'-0" S2.1 S-3.1

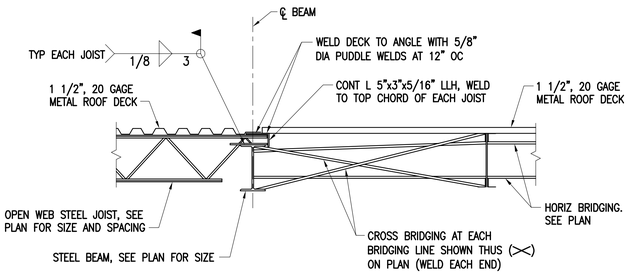

SECTION 13
3/4"=1'-0" S2.1 S3.1

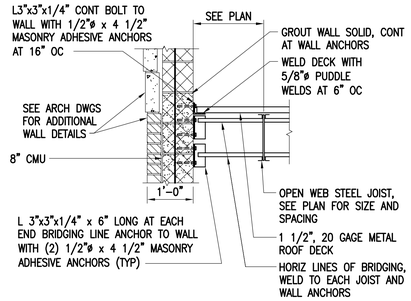

SECTION 14
3/4"=1'-0" S2.1 S3.1

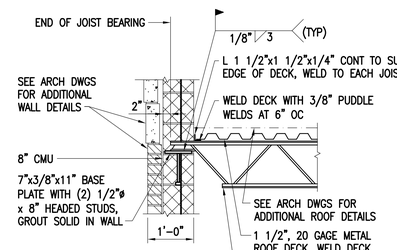

SECTION 15
3/4"=1'-0" S2.1 S3.1

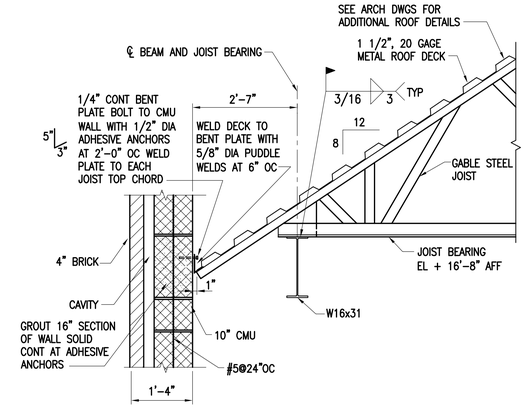

SECTION 16
3/4"=1'-0" S2.1 S3.1

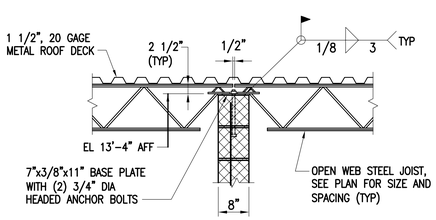

SECTION 17
3/4"=1'-0" S2.1 S3.1

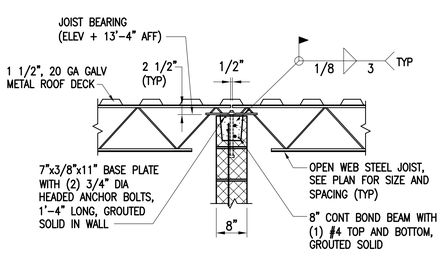

SECTION 18
3/4"=1'-0" S2.1 S3.1

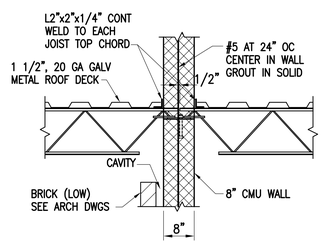

SECTION 19
3/4"=1'-0" S2.2 S3.1

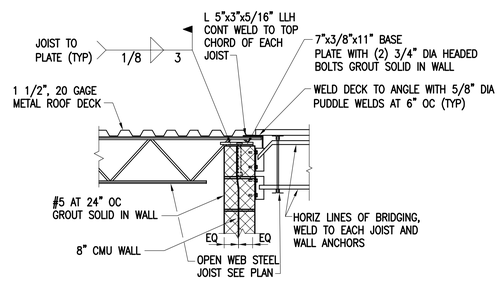

SECTION 20
3/4"=1'-0" S2.1 S3.1

GRAPHIC SCALE(S):
3/4"=1'-0" 1' 0 1' 2' 3'

AUSTIN BROCKENBROUGH & ASSOCIATES, L.L.P.
Consulting Engineers
P.O. Box 4800 Chester, Virginia 23831

COMMONWEALTH OF VIRGINIA
GERALD CHARLES DZIEDZIC
No.031616
8/17/06
PROFESSIONAL ENGINEER

VIRGINIA DEPT. OF TRANSPORTATION
FREDERICKSBURG SAFETY REST AREA AND WELCOME CENTER
I-95 SOUTH, FREDERICKSBURG, VIRGINIA
PROJECT CODE: 501-06501-007

Rawlings Wilson & Associates
ARCHITECTS PLANNERS
1100 NORTH THOMPSON STREET
RICHMOND, VIRGINIA 23230
(804) 359-9141 FAX(804) 359-5715

SHEET STRUCTURAL
TITLE DETAILS

DRAWN RTH
CHECKED GCD
RWA NO. 1890.01
DATE 8/17/06

DRAWING NO. S3.1
SHEET ___ OF ___

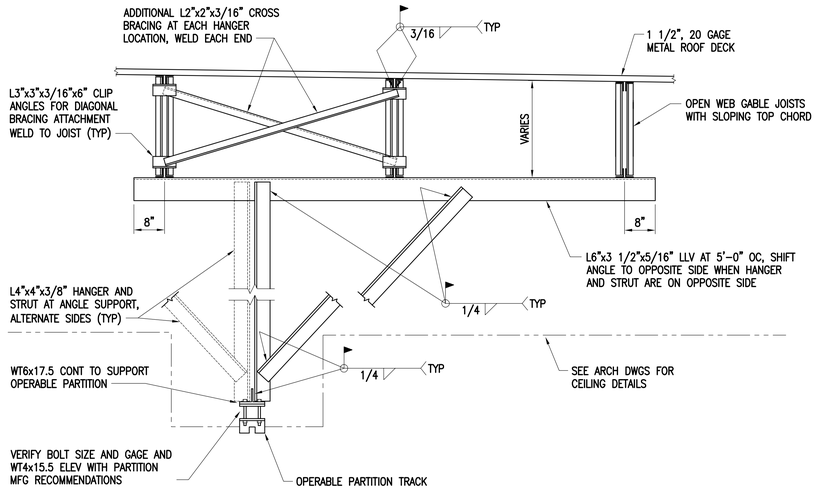

TYPICAL DETAIL AT OPERABLE PARTITION
3/4"=1'-0"

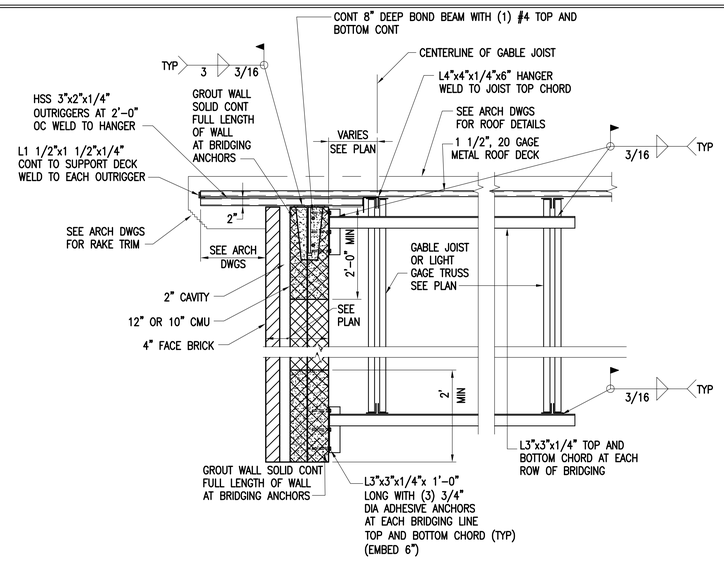

SECTION 21
3/4"=1'-0" S2.1,S2.2 S3.2

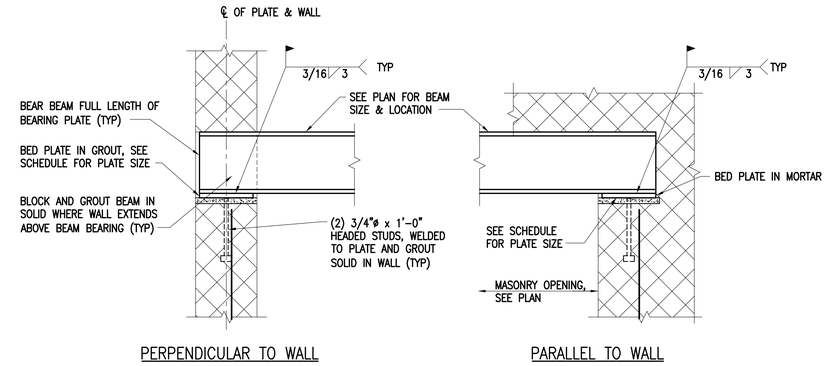

BEARING PLATE SCHEDULE	
WALL THICKNESS	PLATE SIZE
8"	7"x3/4"x10"
10"	9"x3/4"x10"
12"	11"x3/4"x10"

TYPICAL STEEL BEAM BEARING IN MASONRY WALLS
SCALE: 1 1/2"=1'-0"

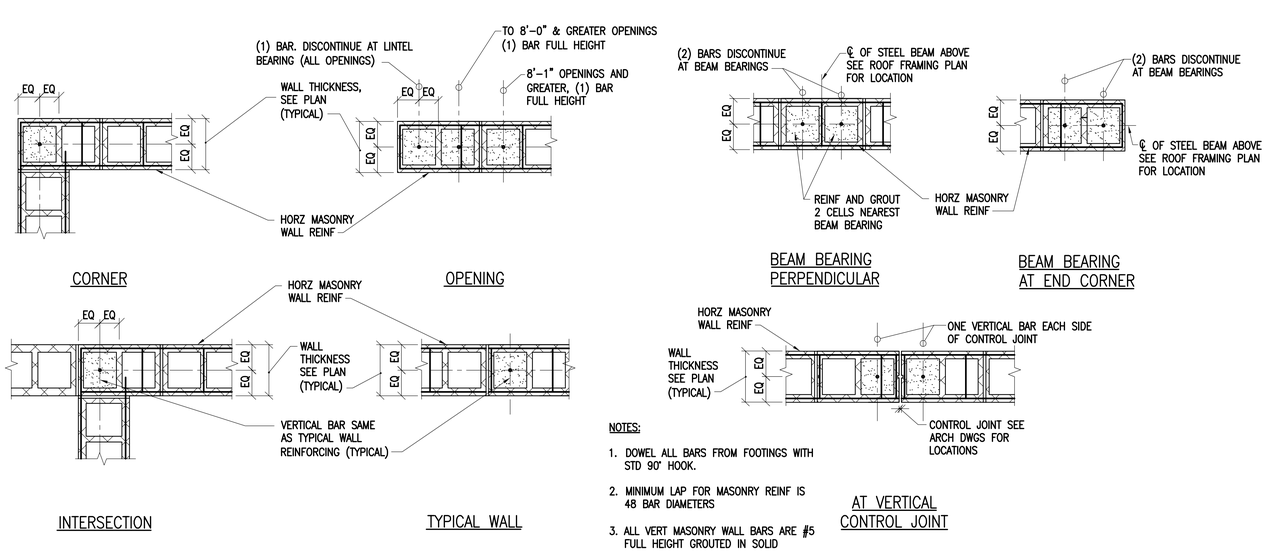

NOTES:

1. DOWEL ALL BARS FROM FOOTINGS WITH STD 90° HOOK.
2. MINIMUM LAP FOR MASONRY REINF IS 48 BAR DIAMETERS
3. ALL VERT MASONRY WALL BARS ARE #5 FULL HEIGHT GROUTED IN SOLID

TYPICAL CONCRETE MASONRY REINFORCING DETAILS
NO SCALE

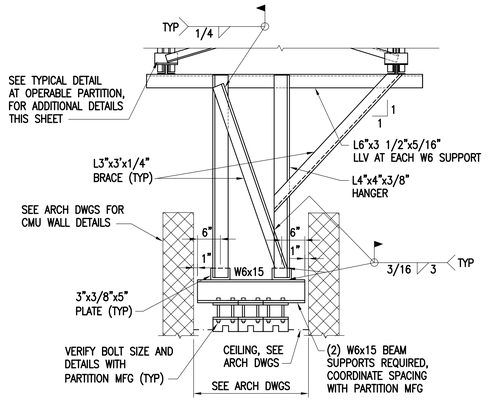

PARTITION STACK STORAGE SECTION 22
3/4"=1'-0" S2.1 S3.2

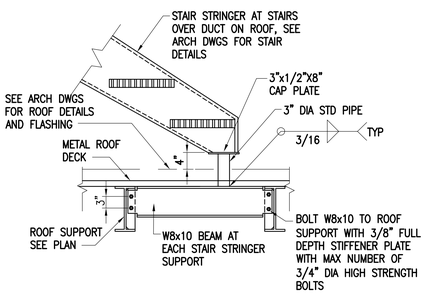

STAIR SUPPORT DETAIL F
3/4"=1'-0" S2.1 S3.2

AUSTIN BROCKENBROUGH & ASSOCIATES, L.L.P.
Consulting Engineers
P.O. Box 4800 Chester, Virginia 23831

COMMONWEALTH OF VIRGINIA
GERALD CHARLES DZIEDZIC
No.031616
8/17/06
PROFESSIONAL ENGINEER

VIRGINIA DEPT. OF TRANSPORTATION
FREDERICKSBURG SAFETY REST AREA AND WELCOME CENTER
I-95 SOUTH, FREDERICKSBURG, VIRGINIA
PROJECT CODE: 501-06501-007

Rawlings Wilson & Associates
ARCHITECTS PLANNERS
1100 NORTH THOMPSON STREET
RICHMOND, VIRGINIA 23230
(804) 359-9141 FAX(804) 359-5715

SHEET TITLE: STRUCTURAL DETAILS

DRAWN	RTH
CHECKED	GCD
RWA NO.	1890.01
DATE	8/17/06

DRAWING NO. S3.2
SHEET ___ OF ___

GRAPHIC SCALE(S):
3/4"=1'-0" 1' 0 1' 2' 3'
1 1/2"=1'-0" 0' 1' 2'

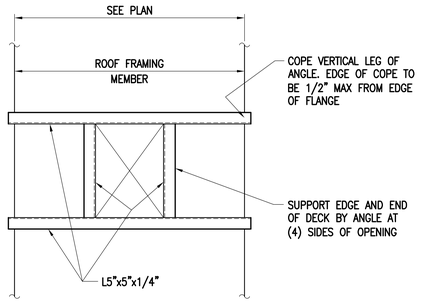

TYPICAL OPENING NOTES:

1. THIS TYPICAL ROOF OPENING DETAIL APPLIES TO ALL OPENINGS IN THE ROOF DECK THAT MAY BE INDICATED ON THE DRAWINGS OR NOT INDICATED ON THE DRAWINGS AND ARE CUT IN THE FIELD AS PART OF THE CONSTRUCTION. THE CONTRACTOR SHALL COORDINATE WITH ALL DESIGN DISCIPLINES TO DETERMINE ALL LOCATIONS AND SIZES OF ROOF OPENINGS REQUIRED FOR THIS PROJECT.

2. WHERE THE ROOF OPENING IS 12"x12" OR LESS AND THE WEIGHT OF THE EQUIPMENT LOCATED AT THE OPENING IS LESS THAN 100 LBS, ANGLE FRAME INDICATED IS NOT REQUIRED. REINFORCE DECK WITH A 24" SQUARE, 14 GAUGE PLATE. SCREW PLATE TO DECK. WHERE THIS ROOF OPENING IS 4" SQUARE OR LESS AND PENETRATES THE DECK BETWEEN THE RIBS AND NO RIBS ARE CUT, NO REINFORCING IS REQUIRED.

TYPICAL ROOF OPENING FRAMING
3/4"=1'-0"

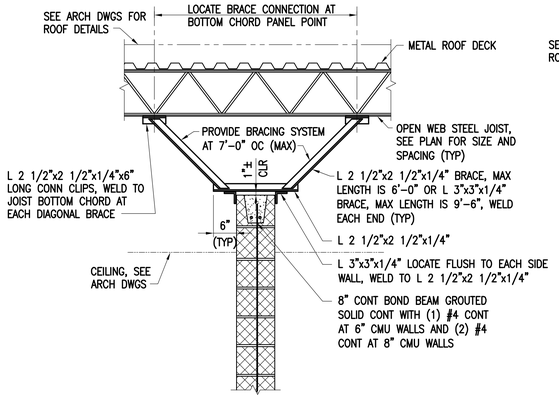

WALL PERPENDICULAR TO JOISTS
3/4"=1'-0"

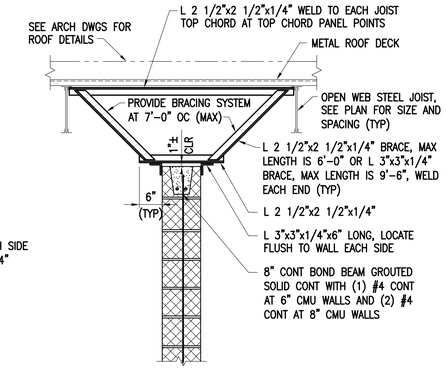

WALL PARALLEL TO JOISTS
3/4"=1'-0"

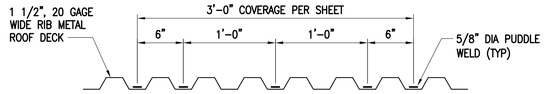

TYPICAL ROOF DECK WELD PATTERN
1 1/2"=1'-0"

NOTES:

1. INTERMEDIATE SUPPORT WELDING SHOWN.
2. WELD ENDS AND END LAPS AT 6" OC.
3. WELD DECK AT 6" OC TO PERIMETER ANGLES.
4. PROVIDE (1) NO 12 SELF-DRILLING, SELF-TAPPING SCREW (STITCH CONNECTOR) AT MID-SPAN OF DECK SIDE LAPS.

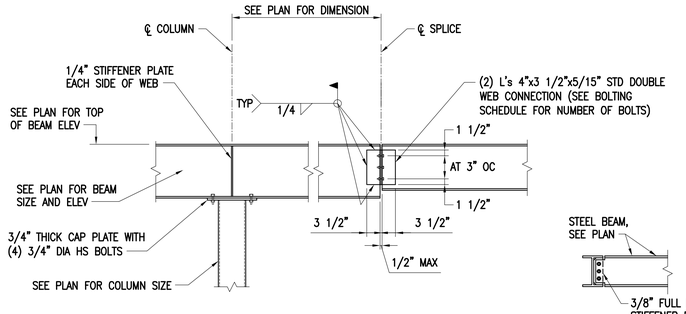

TYPICAL BEAM SPLICE DETAIL
3/4"=1'-0"

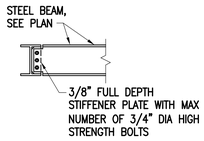

TYPICAL BEAM FRAMING DETAIL
3/4"=1'-0"

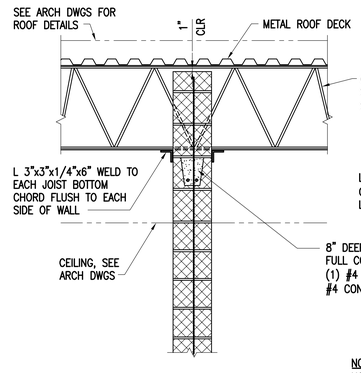

FULL HEIGHT WALL PERPENDICULAR TO JOISTS
3/4"=1'-0"

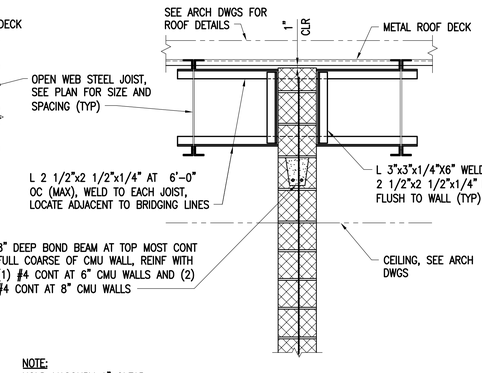

NOTE:
HOLD MASONRY 1" CLEAR OF ALL JOIST AND BRIDGING

FULL HEIGHT WALL PARALLEL TO JOISTS
3/4"=1'-0"

TYPICAL TOP OF INTERIOR WALL BRACING REQUIREMENTS

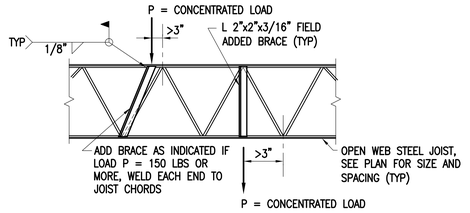

TYPICAL JOISTS REINFORCING
3/4"=1'-0"

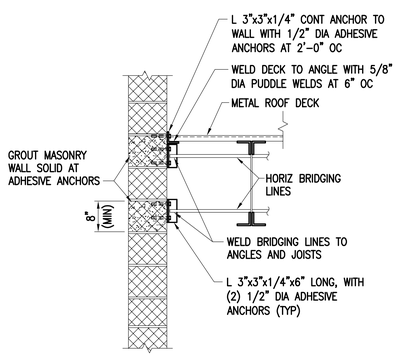

TYPICAL JOISTS BRIDGING ANCHORAGE
3/4"=1'-0"

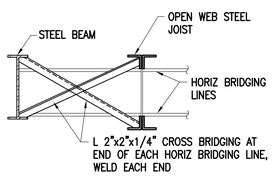

TYPICAL BRIDGING TERMINATION AT STEEL BEAM
NO SCALE

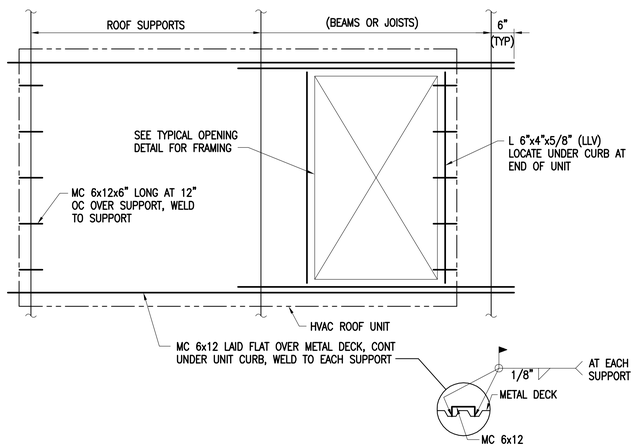

TYPICAL ROOF TOP UNIT SUPPORT
3/4"=1'-0"

GRAPHIC SCALE(S):

3/4"=1'-0" 1' 0 1' 2' 3'

1 1/2"=1'-0" 0' 1' 2'

AUSTIN BROCKENBROUGH & ASSOCIATES, L.L.P.
Consulting Engineers
P.O. Box 4800 Chester, Virginia 23831

COMMONWEALTH OF VIRGINIA
GERALD CHARLES DZIEDZIC
No.031616
8/17/06
PROFESSIONAL ENGINEER

VIRGINIA DEPT. OF TRANSPORTATION
FREDERICKSBURG SAFETY REST AREA AND WELCOME CENTER
I-96 SOUTH, FREDERICKSBURG, VIRGINIA

PROJECT CODE: 501-06501-007

Rawlings Wilson & Associates
ARCHITECTS PLANNERS
1100 NORTH THOMPSON STREET
RICHMOND, VIRGINIA 23230
(804) 358-9141 FAX(804) 359-5715

SHEET	STRUCTURAL
TITLE	DETAILS

DRAWN	RTH
CHECKED	GCD
RWA NO.	189001
DATE	8/17/06

DRAWING NO. S3.3
SHEET ___ OF ___

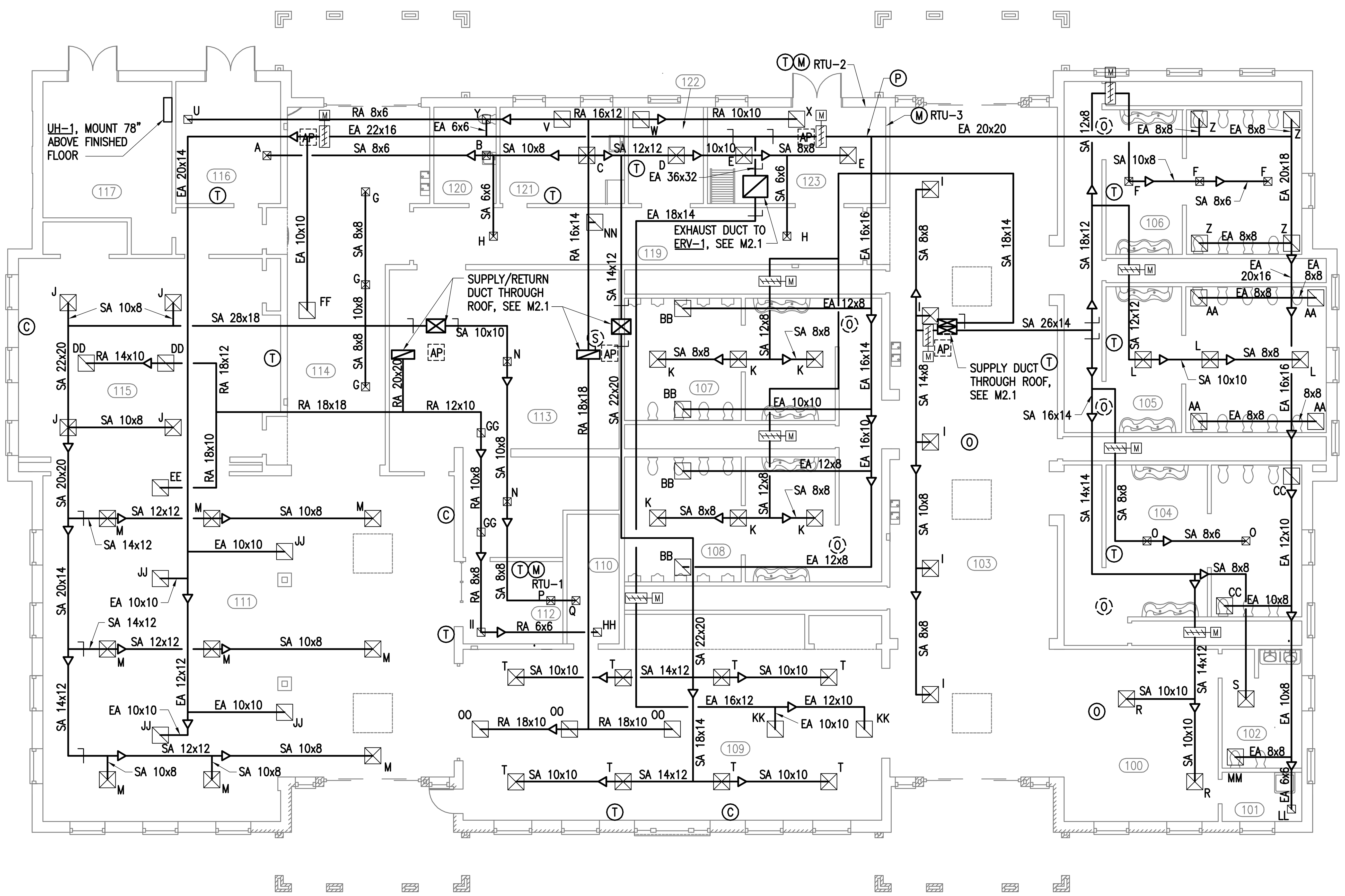

MECHANICAL PLAN

SCALE: 1/8"=1'-0"

HVAC LEGEND

PLAN	DESCRIPTION
—	LINEWEIGHTS
⊠	SUPPLY DIFFUSER
⧄	EXHAUST/RETURN GRILLE
(T)	THERMOSTAT
M	MOTORIZED DAMPER
(O)	OCCUPANCY SENSOR (HVAC)
(O)	OCCUPANCY SENSOR (LIGHTING/HVAC)
(SP)	STATIC PRESSURE SENSOR
[—	CAP
¬	MANUAL BALANCING DAMPER
AP	24x24 ACCESS PANEL
(F)	AIR FLOW RATE SENSOR
(M)	MONITOR/CONTROL STATION
(T)	TEMPERATURE SENSOR
(C)	CO2 SENSOR
(P)	STATIC PRESSURE SENSOR
(S)	DUCT SMOKE DETECTOR

ABBREVIATIONS

AP	ACCESS PANEL
AUX	AUXILIARY
BDD	BAKCDRAFT DAMPER
CFM	CUBIC FOOT PER MINUTE
CMU	CONCRETE MASONARY UNIT
CO	CLEANOUT
COP	COEFFICIENT OF PERFORMANCE
CW	COLD WATER
DF	DRINKING FOUNTAIN
EA	EACH/EXHAUST AIR
EXIST	EXISTING
ERV	ENERGY RECOVERY VENTILATOR
EW	EACH WAY
F	FAHRENHEIT
FD	FLOOR DRAIN
GAL	GALLON
GPH	GALLONS PER HOUR
GPM	GALLONS PER MINUTE
HP	HEAT PUMP/HORSEPOWER
HW	HOT WATER
HZ	HERTZ
HVAC	HEATING/VENT
IN	INCHES
kW	KILOWATTS
MBH	1000 BRITISH THERMAL UNITS/HOUR
MFG	MANUFACTURING
OA	OUTSIDE AIR
OC	ON CENTER
PSI	POUNDS PER SQUARE INCH
RA	RETURN AIR
SA	SUPPLY AIR
SAN	SANITARY
SS	SANITARY SEWER
TW	TEMPERED WATER
TYP	TYPICAL
UON	UNLESS OTHERWISE NOTED
V	VENT
VAV	VARIABLE AIR VOLUME
W	WATER/WASTE
WH	WATER HEATER OR WALL HYDRANT
°	DEGREES
ø	DIAMETER

HVAC NOTES

1. SEE M3.1 FOR HVAC CONTROLS AND AIR FLOW SCHEMATIC AND THE CONTROL SEQUENCE.
2. DUCT DIMENSIONS AS SHOWN ARE OUTSIDE DUCT DIMENSIONS AND DO NOT INCLUDE EXTERNAL INSULATION. EXTERNAL INSULATION IS REQUIRED FOR ALL DUCT.
3. INTERNAL ACOUSTIC LINING IS REQUIRED ON ALL DUCT.
4. ALL DUCT TO DIFFUSER/REGISTER CONNECTIONS SHALL BE PER DETAIL A ON DRAWIING M1.1.
5. ALL DUCTWORK SHALL RUN BETWEEN THE CEILING AND THE JOISTS UNLESS OTHERWISE INDICATED.
6. FOR MANUAL VOLUME DAMPERS LOCATED BELOW THE ACCESSIBLE ATTIC SPACES MOUNT CABLE ACTUATORS ADJACENT TO CATWALK.
7. FOR MANUAL VOLUME DAMPERS LOCATED BELOW FLAT ROOF, MOUNT CABLE ACTUATORS ABOVE THE CLOSEST CEILING ACCESS PANEL.

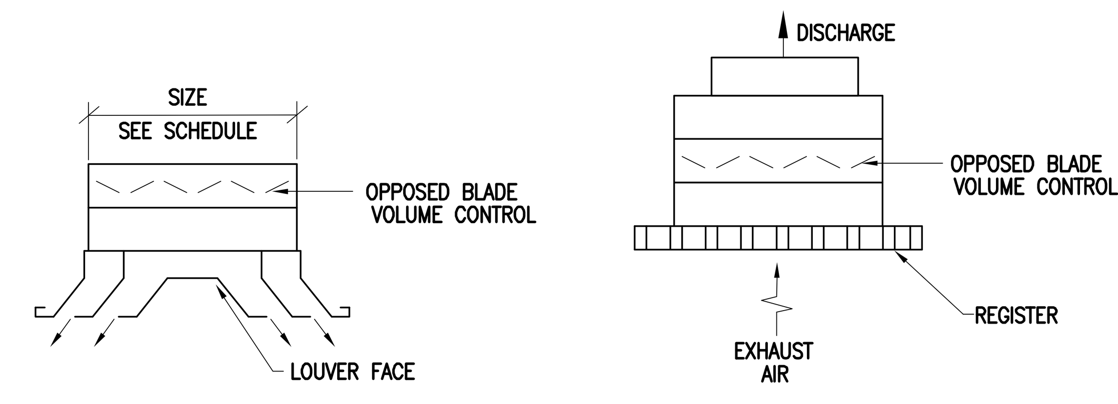

DUCT TO DIFFUSER CONNECTION (A M1.1|M1.1)

NO SCALE

DIFFUSER SCHEDULE

SYMBOL	SIZE (INCHES) FACE	SIZE (INCHES) THROAT (ø)	CFM (+/-)	SERVICE	TYPE	DIRECTION	STATIC PRESSURE	VOLUME CONTROL
A	12x12	4	101	SA	LOUVER	4-WAY	0.02	YES
B	12x12	4	50	SA	LOUVER	4-WAY	0.01	YES
C	24x24	8	221	SA	LOUVER	4-WAY	0.03	YES
D	24x24	8	176	SA	LOUVER	4-WAY	0.02	YES
E	24x24	8	133	SA	LOUVER	4-WAY	0.01	YES
F	12x12	4	112	SA	LOUVER	4-WAY	0.03	YES
G	12x12	4	86	SA	LOUVER	4-WAY	0.02	YES
H	12x12	4	58	SA	LOUVER	4-WAY	0.01	YES
I	24x24	8	157	SA	LOUVER	4-WAY	0.02	YES
J	24x24	8	207	SA	LOUVER	4-WAY	0.03	YES
K	24x24	8	137	SA	LOUVER	4-WAY	0.01	YES
L	24x24	8	162	SA	LOUVER	4-WAY	0.01	YES
M	24x24	8	225	SA	LOUVER	4-WAY	0.03	YES
N	12x12	4	105	SA	LOUVER	4-WAY	0.03	YES
O	12x12	4	93	SA	LOUVER	4-WAY	0.03	YES
P	12x12	4	54	SA	LOUVER	4-WAY	0.01	YES
Q	12x12	4	57	SA	LOUVER	4-WAY	0.01	YES
R	24x24	10	294	SA	LOUVER	4-WAY	0.04	YES
S	24x24	8	150	SA	LOUVER	4-WAY	0.02	YES
T	24x24	8	282	SA	LOUVER	4-WAY	0.05	YES
U	12x12	6	101	RA	PERFORATED	–	0.03	–
V	24x24	10	221	RA	PERFORATED	–	0.03	–
W	24x24	8	176	RA	PERFORATED	–	0.03	–
X	24x24	10	266	RA	PERFORATED	–	0.04	–
Y	12x12	6	75	EA	PERFORATED	–	0.02	–
Z	24x24	8	150	EA	PERFORATED	–	0.03	–
AA	24x24	8	188	EA	PERFORATED	–	0.05	–
BB	24x24	10	338	EA	PERFORATED	–	0.03	–
CC	24x24	10	225	EA	PERFORATED	–	0.03	–
DD	24x24	14	414	RA	PERFORATED	–	0.03	–
EE	24x24	16	501	RA	PERFORATED	–	0.05	–
FF	24x24	10	258	EA	PERFORATED	–	0.03	–
GG	12x12	6	105	RA	PERFORATED	–	0.02	–
HH	12x12	6	57	RA	PERFORATED	–	0.01	–
II	12x12	6	54	RA	PERFORATED	–	0.01	–
JJ	24x24	12	381	EA	PERFORATED	–	0.06	–
KK	24x24	12	354	EA	PERFORATED	–	0.06	–
LL	12x12	6	50	EA	PERFORATED	–	0.01	–
MM	24x24	8	150	EA	PERFORATED	–	0.03	–
NN	12x12	6	91	RA	PERFORATED	–	0.03	–
OO	24x24	16	515	EA	PERFORATED	–	0.04	–

VENTILATION SCHEDULE

ROOM #	ROOM NAME	EA (CFM)	SA (CFM)	RA (CFM)
107	MEN'S RESTROOM A	675	410	–
108	MEN'S RESTROOM B	675	410	–
106	WOMEN'S RESTROOM A	600	336	–
105	WOMEN'S RESTROOM B	750	486	–
104	WOMEN'S RESTROOM C	450	186	–
102	MULTI-USE RESTROOM	150	150	–
101	JANITOR'S CLOSET	50	–	–
119	BACK CORRIDOR	–	116	91
100	FOYER	–	588	–
123	JANITOR'S OFFICE	–	266	266
121	BREAK ROOM	–	221	221
103	MAIN CORRIDOR	–	784	–
122	SERVER ROOM	–	176	176
120	STAFF TOILET	75	50	–
116	STATE TROOPER'S OFFICE	–	101	101
109	VENDING	708	2,254	1,546
115	EDU/PRESS ROOM	–	827	827
113	STORAGE SHELVING	–	210	210
110	VENDING STORAGE	–	57	57
111	WELCOME CENTER	1522	2023	501
114	WELCOME CENTER CORRIDOR	258	258	–
112	MANAGER'S OFFICE	–	54	54
	TOTALS	5,913	9,963	4,050

OPERATING CONDITIONS

INDOORS			OUTDOORS		
SUMMER		WINTER	SUMMER		WINTER
°F DB	% RH	°F DB	°F DB	% RH	°F DB
78	50	68	94	45	14

PACKAGED SYSTEM HEAT PUMP SCHEDULE

UNIT	FAN DATA: SUPPY AIR (CFM)	OUTSIDE AIR (CFM)	EXTERNAL STATIC PRESSURE (INCHES WATER)	FAN MOTOR (HP)	VOLTZ/PHASE /HERTZ	COIL DATA – COOLING: TOTAL LOAD (MBH)	SENSIBLE LOAD (MBH)	ENTERING AIR TEMPERATURE DRY BULB (°F)	ENTERING AIR TEMPERATURE WET BULB (°F)	HEATING: TOTAL LOAD (MBH)	COP	AUXILIARY HEATING CAPACITY (kW)	REMARKS: DESIGN BASED ON:
RTU-1	3,429	1,780	.55	2	460/3/60	128.2	77.1	81.5	79.8	69.6	3.2	27.8	CARRIER PACKAGED HEAT PUMP 50HJQ012-621
RTU-2	3,184	783	.55	2.5	460/3/60	114.5	77.7	78.9	68.5	68.7	3.2	27.8	CARRIER PACKAGED HEAT PUMP 50HJQ012-621
RTU-3	3,350	3,350	.45	2	460/3/60	125.1	76.7	81.5	70.1	71	3.3	27.8	CARRIER PACKAGED HEAT PUMP 50HJQ012-621

ENERGY RECOVERY VENTILATOR SCHEDULE

UNIT	FAN DATA: EXHAUST AIR (CFM)	OUTSIDE AIR (CFM)	EXTERNAL STATIC PRESSURE (INCHES WATER)	FAN MOTOR (HP)	VOLTS/PHASE /HERTZ	WHEEL DATA – COOLING: TOTAL LOAD (MBH)	ENTERING AIR TEMPERATURE DRY BULB (°F)	ENTERING AIR TEMPERATURE WET BULB (°F)	HEATING: TOTAL LOAD (MBH)	ENTERING AIR TEMPERATURE DRY BULB (°F)	ENTERING AIR TEMPERATURE WET BULB (°F)	EFF (%)	REMARKS
ERU-1	5,913	5,913	0.6	7.5	460/3/60	308.9	94	76	568.2	14	11.3	76	DESIGN BASED ON CARRIER 62ME-750

UNIT HEATER SCHEDULE

UNIT	HEATING CAPACITY (kW)	VOLTS/PHASE/HZ	REMARKS
UH-1	1.5	277/1/60	WALL MOUNTED

GRAPHIC SCALE(S):

1/8"=1'-0" 0' 5' 10' 15' 24'

AUSTIN BROCKENBROUGH & ASSOCIATES, L.L.P.
Consulting Engineers
P.O. Box 4800 Chester, Virginia 23831

COMMONWEALTH OF VIRGINIA
BRUCE K. SADLER
No.023864
8/17/06
PROFESSIONAL ENGINEER

Rawlings Wilson & Associates
ARCHITECTS PLANNERS
1100 NORTH THOMPSON STREET
RICHMOND, VIRGINIA 23230
(804) 358-9141 FAX(804) 359-5715

VIRGINIA DEPT. OF TRANSPORTATION
FREDERICKSBURG SAFETY REST AREA AND WELCOME CENTER
I-95 SOUTH, FREDERICKSBURG, VIRGINIA
PROJECT CODE: 501-06501-007

SHEET TITLE: MECHANICAL PLAN

DRAWN	RTH
CHECKED	BKS
RWA NO.	1890.01
DATE	8/17/06

DRAWING NO. M1.1
SHEET ___ OF___

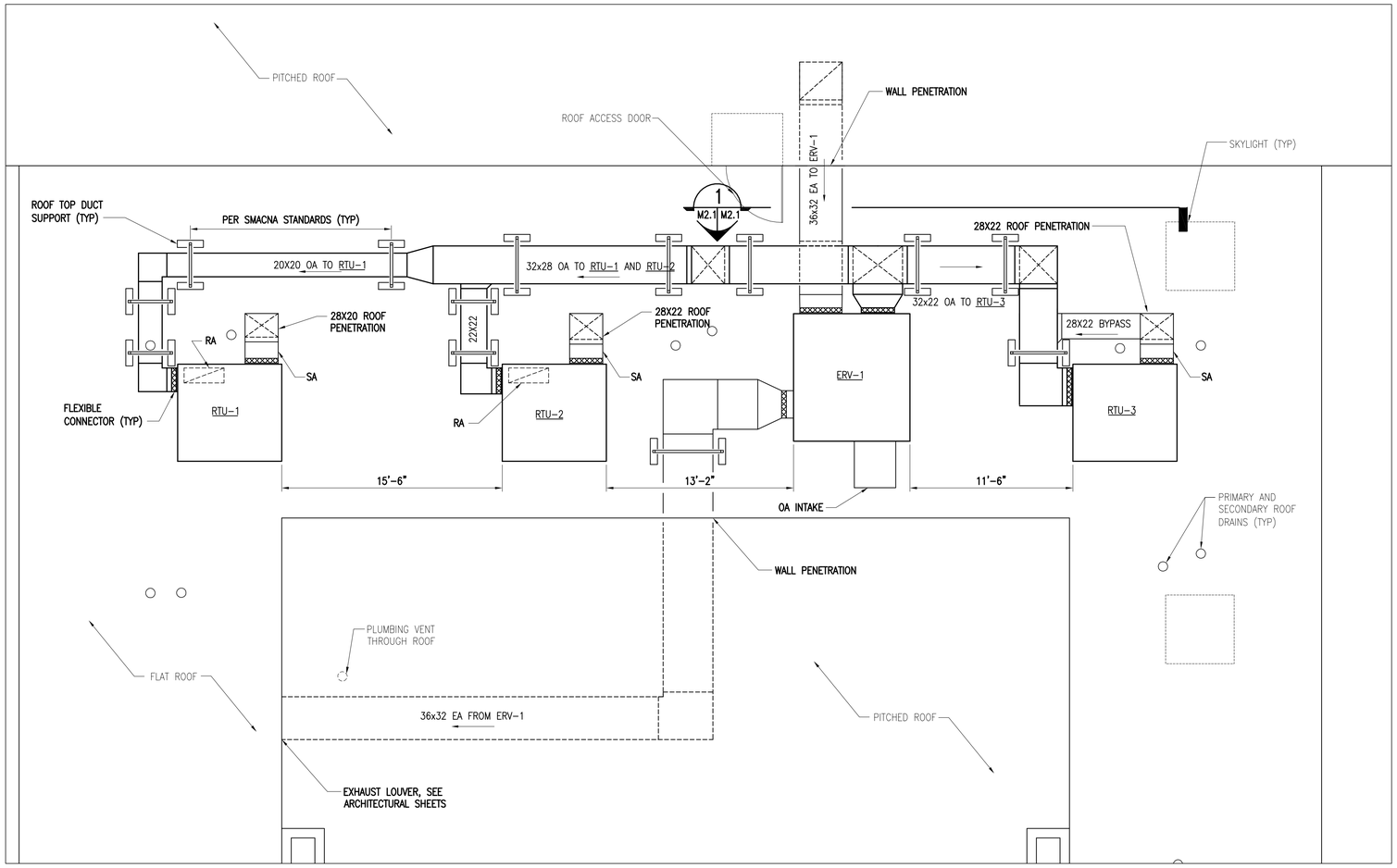

PLAN NORTH

MECHANICAL ROOF PLAN

SCALE: 1/4"=1'-0"

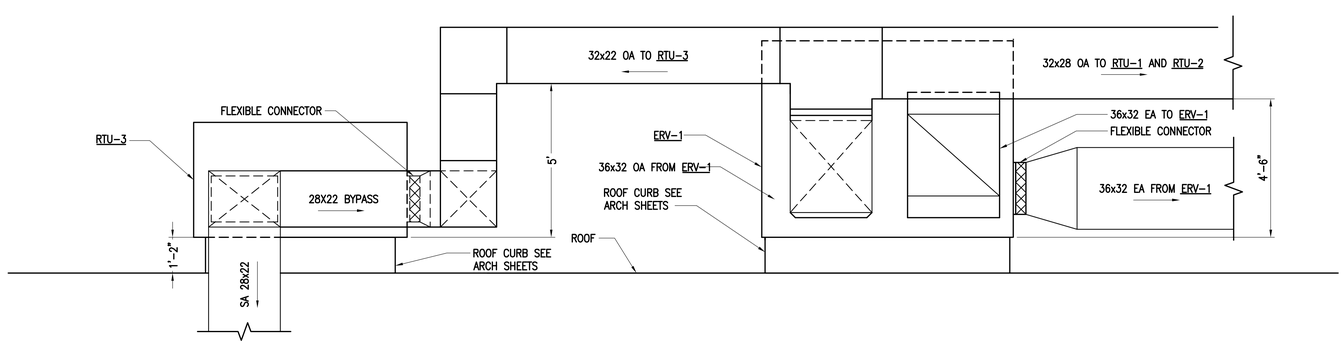

SECTION 1

1/2"=1'

M2.1 M2.1

NOTES:

1. ROUTE PRIMARY AND SECONDARY CONDENSATE DRAIN LINES TO NEAREST PRIMARY ROOF DRAIN. SIZE CONDENSATE DRAIN LINES PER MFG.
2. ROOF TOP DUCT SUPPORTS SHALL BE INSTALLED PER SMACNA STANDARDS. FIELD VERIFY ROUTING AND ELEVATION OF DUCT PRIOR TO FABRICATING STRUT SUPPORTS.

GRAPHIC SCALE(S):

1/4"=1'-0" 1' 0' 1' 5' 11'

1/2"=1'-0" 1' 0' 1' 2' 3' 4' 5'

AUSTIN BROCKENBROUGH & ASSOCIATES, L.L.P.
Consulting Engineers
P.O. Box 4800 Chester, Virginia 23831

COMMONWEALTH OF VIRGINIA
BRUCE K. SADLER
No.023864
8/17/06
PROFESSIONAL ENGINEER

VIRGINIA DEPT. OF TRANSPORTATION
"URG SAFETY REST
AREA AND WELCOME CENTE
I-95 SOUTH, FREDERICKSBURG, VIRGINIA

PROJECT CODE: 501-06501-007

Rawlings Wilson & Associates
ARCHITECTS PLANNERS
1100 NORTH THOMPSON STREET
RICHMOND, VIRGINIA 23230
(804) 358-8141 FAX(804) 359-5715

SHEET TITLE: MECHANICAL ROOF PLAN

DRAWN: RTH
CHECKED: BKS
RWA NO.: 1890.01
DATE: 8/17/06

DRAWING NO. M2.1
SHEET ___ OF ___

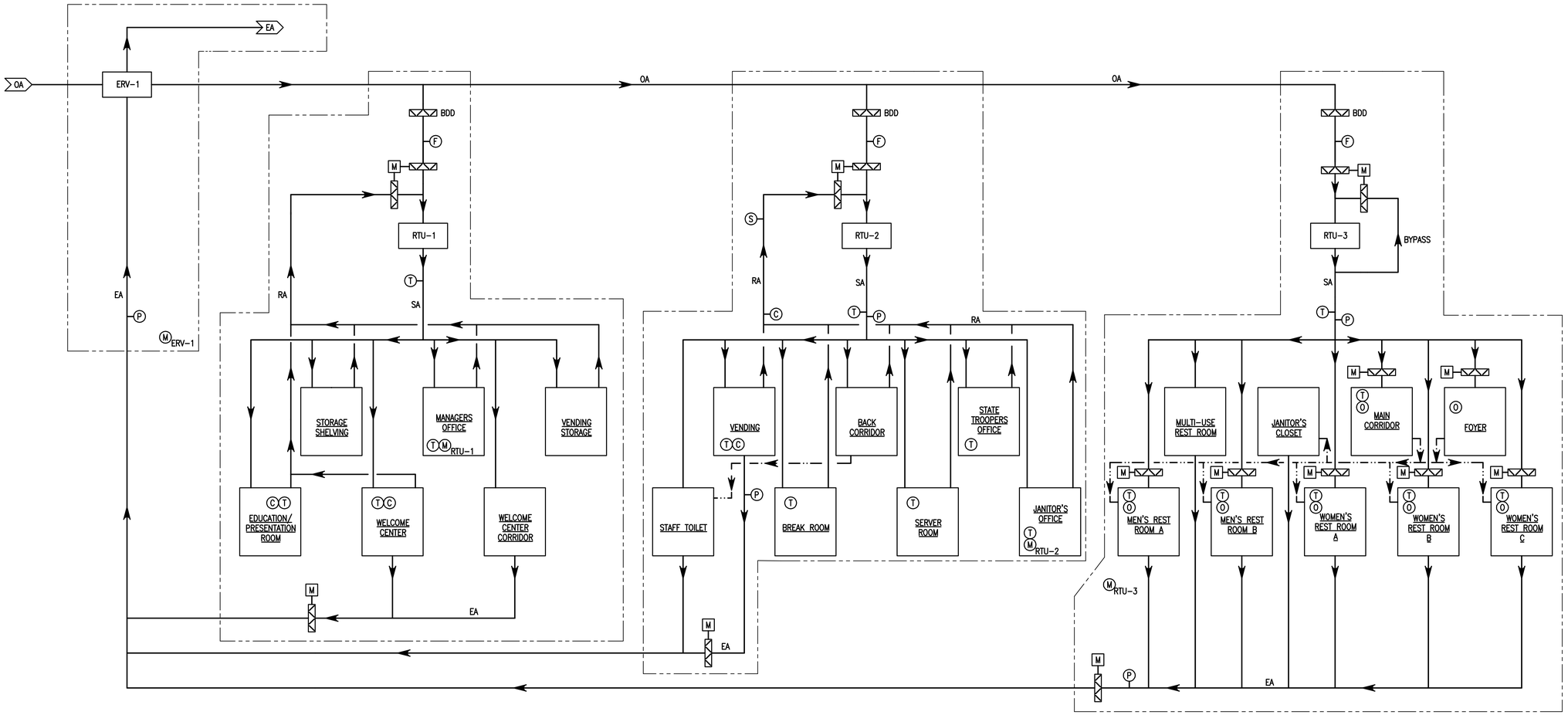

HVAC CONTROLS AND AIR FLOW SCHEMATIC

SCALE: SCALE

CONTROL SEQUENCE

1. THE HVAC SYSTEM, CONSISTING OF THREE ROOFTOP UNITS (RTU), AN ENERGY RECOVERY VENTILATOR (ERV), VARIOUS CONTROLLERS, SENSORS, DAMPERS, ETC., SHALL BE CONTROLLED BY A PACKAGED SYSTEM BY ONE CONTROL SYSTEMS CONTRACTOR. WHILE THE INDIVIDUAL COMPONENTS MAY BE SUPPLIED BY DIFFERENT MANUFACTURERS WITH INTEGRAL/UNITARY CONTROL SYSTEMS INSTALLED BY OTHERS, ALL SIMILAR COMPONENTS SHALL BE OF THE SAME MANUFACTURER, AND THE CONTROL SYSTEMS CONTRACTOR SHALL BE RESPONSIBLE FOR PROVIDING AN INTEGRATED AND COMPLETE SYSTEM THAT PERFORMS AS INDICATED BELOW.

2. EACH RTU AND ERV SHALL HAVE AN INDEPENDENT CONTROLLER WITH AN ASSOCIATED MONITORING/CONTROL STATION. MONITORING/CONTROL STATION SHALL BE THE OPERATOR INTERFACE IN ORDER TO MONITOR THE SYSTEM'S CONDITION AND TO ADJUST SETTINGS. MONITORING/CONTROL STATIONS FOR ERV-1, RTU-2, AND RTU-3 SHALL BE MOUNTED IN THE JANITOR'S OFFICE. THE MONITORING CONTROL STATION FOR RTU-1 SHALL BE MOUNTED IN THE MANAGERS OFFICE.

3. CONTROLLERS SHALL BE 7-DAY DIGITAL PROGRAMMABLE CONTROLLER WITH A MINIMUM OF 4 TEMPERATURE CYCLES PER DAY. ALL SETTINGS MAY BE CHANGED THROUGH THE CONTROLLER. IF A SETTING IS INDICATED TO BE OPERATOR ADJUSTABLE, THE OPERATOR SHALL BE CAPABLE OF ADJUSTING THE SETTING BY USING A KEYPAD ON THE FRONT OF THE MONITORING/CONTROL STATION. ALL INDICATED SETTINGS SHALL BE CONSIDERED INITIAL AND MUST BE ADJUSTED DURING STARTUP AND COMMISSIONING TO SUIT ACTUAL CONDITIONS. CONTROLLER SHALL MAINTAIN CURRENT SETTINGS EVEN AFTER A POWER FAILURE.

4. EACH RTU HAS A DIFFERENT CONTROL SEQUENCE. WHERE A PARTICULAR CONTROL SEQUENCE DOES NOT APPLY TO ALL THREE RTUS, THE APPLICABLE UNITS ARE INDICATED.

5. THE HEAT PUMP OPERATION OF THE RTU, INCLUDING CYCLING OF COMPRESSORS, HOT-GAS BYPASS, ANY AUXILIARY AND EMERGENCY HEAT, SHALL BE THE MANUFACTURER'S STANDARD SEQUENCE OF CONTROL, AND THE FOLLOWING SEQUENCE SHALL BE ADJUSTED TO PREVENT INTERFERENCE OR CONFLICT WITH THE MANUFACTURER'S NORMAL HEAT PUMP OPERATION.

6. THE SUPPLY AIR FAN FOR RTU-2 AND RTU-3 AND THE EXHAUST FAN FOR ERV-1 SHALL ALWAYS RUN. THE SUPPLY AIR FAN FOR RTU-1 SHALL RUN CONTINUOUSLY DURING OPERATING HOURS, BUT MAY BE OPERATOR ADJUSTED TO CONTINUOUS, AUTO, OR INTERMITTENT OPERATION DURING THE NIGHT TIME SET BACK HOURS.

7. THE CONTROLLER SHALL MAINTAIN AN AVERAGE OF THE TEMPERATURES IN THE OCCUPIED SPACES [RTU-3] OR DURING OPERATING HOURS [RTU-1, RTU-2] TO THE SETPOINT WITHIN THE ALLOWED OCCUPIED DEADBAND. THE SETPOINT SHALL BE OPERATOR ADJUSTABLE WITH BOTH WINTER AND SUMMER SETTINGS. INITIAL SETPOINT SHALL BE 68° F / 78° F (WINTER / SUMMER) WITH AN OCCUPIED DEADBAND OF 2° F (+1° F/-1° F). DEADBAND MAY BE SET BETWEEN 0.5° F AND 10° F. CONTROLLER SHALL AUTOMATICALLY SWITCH BETWEEN SEASONS AND SWITCH RTU BETWEEN HEATING AND COOLING MODES.

8. THE CONTROLLER SHALL MAINTAIN AN AVERAGE OF THE TEMPERATURES IN THE UNOCCUPIED OR NIGHT TIME SET BACK SPACES TO THE SAME SETPOINT, BUT WITHIN THE ALLOWED UNOCCUPIED DEADBAND. INITIAL UNOCCUPIED DEADBAND SHALL BE 6° F (+1° F/-5° F WINTER, +5° F/-1° F SUMMER). DEADBAND MAY BE SET BETWEEN 0.5° F AND 10° F.

9. THE OA AND RA CONTROL DAMPERS [RTU-1, RTU-2] SHALL MODULATE PROPORTIONALLY FROM THE MINIMUM OUTSIDE AIRFLOW SETTING TO 100% OPEN IN ORDER TO PROVIDE ECONOMIZER/ENTHALPY CONTROL. FOR SPACES WITH CO2 SENSORS, THESE DAMPERS SHALL ALSO MODULATE IN ORDER TO MAINTAIN THE CO2 LEVEL BELOW 1,000 PPM. IF THE CO2 LEVEL GOES ABOVE 1,000 PPM CONTINUOUSLY FOR OVER 5 MINUTES, PROVIDE AN ALARM AT THE ASSOCIATED MONITORING/CONTROL STATION. DURING NIGHT TIME SET BACK OPERATION [RTU-1], THE OA DAMPER SHALL BE FULLY CLOSED AND THE RA DAMPER SHALL BE COMPLETELY OPENED.

10. WHEN A SPACE IS OCCUPIED AS DETERMINED BY THE OCCUPANCY SENSOR, THE SUPPLY AIR CONTROL DAMPER FOR THAT SPACE SHALL BE FULLY OPENED AND SHALL NOT MODULATE.

11. WHEN A SPACE IS UNOCCUPIED AS DETERMINED BY THE OCCUPANCY SENSOR, THE SUPPLY AIR CONTROL DAMPER FOR THAT SPACE SHALL BE AT ITS MINIMUM FLOW SETTING OF 200 CFM UNLESS THE TEMPERATURE OF THE SPACE IS NOT SATISFIED. IF THE SPACE TEMPERATURE IS NOT SATISFIED, THEN THE CONTROL DAMPER SHALL MODULATE TO SATISFY THE TEMPERATURE SETPOINT (WITHIN THE UNOCCUPIED DEADBAND).

12. A SPACE IS CONSIDERED OCCUPIED ONCE THE OCCUPANCY SENSOR HAS DETECTED MOVEMENT, AND IT SHALL REMAIN IN OCCUPIED STATUS FOR A FIXED PERIOD OF TIME AFTER THE LAST DETECTED MOVEMENT. THE INITIAL SETTING SHALL BE 15 MINUTES, AND IT SHALL BE CAPABLE OF BEING SET BETWEEN 5 AND 90 MINUTES. IF ANY OF THE RESTROOMS ARE OCCUPIED, THE MAIN CORRIDER AND FOYER SHALL BE CONSIDERED OCCUPIED.

13. IF THE CONTROLLER [RTU-3] IS IN WINTER MODE AND THE CONTROLLER IS NOT CALLING FOR HEAT, THE RTU'S LEAVING AIR TEMPERATURE MUST BE MAINTAINED TO A MINIMUM TEMPERATURE SETPOINT. THE SETTING SHALL BE 64° F INITIALLY. IF THE HEAT PUMP IS OFF DUE TO THE COMPRESSOR RE-START TIME DELAY, THE MULTI-STAGED AUXILIARY HEAT COILS SHALL BE CYCLED TO CONTROL THE SUPPLY AIR TEMPERATURE.

14. IN ORDER TO MAINTAIN A CONSTANT VOLUME OF AIR THROUGH THE RTU [RTU-3] THE RTU SHALL HAVE A MODULATING BY-PASS DAMPER SYSTEM. SYSTEM SHALL CONTROL THE OUTSIDE AIR AND BY-PASS DAMPERS IN ORDER TO MAINTAIN A SPECIFIC STATIC PRESSURE IN THE DUCTWORK. THE INITIAL STATIC PRESSURE SETTING SHALL BE DETERMINED DURING STARTUP, AND IT SHALL BE ADJUSTABLE BETWEEN 50% AND 150% OF THE INITIAL SETTING.

15. IN ORDER TO MAINTAIN A PROPER STATIC PRESSURE IN THE SPACES, THE CONTROL DAMPER IN EACH EXHAUST AIR TRUNK SHALL MODULATE. THE CONTROL DAMPERS RELATED TO RTU-2 AND RTU-3 SHALL MODULATE PROPORTIONALLY FROM 0% TO 100% OPEN BASED UPON THE STATIC PRESSURE IN THE EXHAUST AIR DUCT. THE INITIAL STATIC PRESSURE SETTING SHALL BE DETERMINED DURING STARTUP, AND IT SHALL BE ADJUSTABLE BETWEEN 50% AND 150% OF THE INITIAL SETTING. THE EXHAUST AIR CONTROL DAMPER RELATED TO RTU-1 SHALL BE FULLY OPEN WHEN RTU-1 IS RUNNING AND SHALL BE FULLY CLOSED WHEN RTU-1 IS OFF.

16. IN ORDER TO MAINTAIN THE PROPER AMOUNT OF EXHAUST AIRFLOW AND MAINTAIN A NEGATIVE STATIC PRESSURE IN THE EXHAUST INLET OF ERV-1, ERV-1 SHALL HAVE A VARIABLE SPEED BLOWER MOTOR THAT IS CONTROLLED BY THE STATIC PRESSURE IN THE DUCT AT THE UNIT'S INLET.

17. THE SYSTEM RELATED TO RTU-3 SHALL BE BALANCED SUCH THAT THE EXHAUST CONTROL DAMPER SETTING MAINTAINS A MINIMUM NEGATIVE 0.01" WATER COLUMN IN THE RESTROOMS RELATIVE TO THE MAIN CORRIDOR AT ALL TIMES.

18. FLOW SENSORS AT EACH RTU SHALL MONITOR THE AMOUNT OF OUTSIDE AIR. AN ALARM SHALL BE PROVIDED AT THE ASSOCIATED MONITORING/CONTROL STATION WHEN THE QUANTITY FALLS BELOW THE MINIMUM OUTSIDE AIRFLOW BY 15%. CONTROLLER SHALL DETERMINE THE MINIMUM OUTSIDE AIRFLOW BY MONITORING THE STATUS OF THE OCCUPANCY [RTU-3] AND CO2 SENSORS [RTU-2]. THE MINIMUM OUTSIDE AIR FLOW SHALL BE 675 CFM FOR RTU-2 AND 2050 CFM FOR RTU-3. THE MINIMUM OUTSIDE AIR FLOW FOR RTU-1 IS 1780 CFM.

19. UPON ACTUATION OF THE SMOKE DETECTOR IN THE RETURN AIR DUCT FOR RTU-2, RTU-2 SHALL BE SHUTDOWN AND AN ALARM A SHALL BE ANNUNCIATED AT THE MONITOR/CONTROL STATION AND FIRE ALARM PANEL.

20. CONTROL DAMPER SYSTEMS SHALL USE ELECTRICALLY ACTUATED DAMPER MOTORS WITH NONSPRING RETURN SETTINGS. FAIL-SAFE MODE (LOSS OF POWER OR SIGNAL) SHALL POSITION THE DAMPER TO 100% OPEN, EXCEPT FOR BY-PASS CONTROL DAMPERS THAT SHALL FAIL TO 100% CLOSED (0% BY-PASS).

21. IF THE AVERAGE TEMPERATURE FOR EACH SYSTEM EXCEEDS THE SYSTEM SETPOINT CONTINUOUSLY FOR MORE THAN 30 MINUTES, PROVIDE AN ALARM AT THE ASSOCIATED MONITORING/CONTROL STATION.

AUSTIN BROCKENBROUGH & ASSOCIATES, L.L.P.
Consulting Engineers
P.O. Box 4800 Chester, Virginia 23831

COMMONWEALTH OF VIRGINIA
BRUCE K. SADLER
No.023864
8/17/06
PROFESSIONAL ENGINEER

VIRGINIA DEPT. OF TRANSPORTATION
FREDERICKSBURG SAFETY REST AREA AND WELCOME CENTER
I-95 SOUTH, FREDERICKSBURG, VIRGINIA
PROJECT CODE: 501-06501-007

Rawlings Wilson & Associates
ARCHITECTS PLANNERS
1100 NORTH THOMPSON STREET
RICHMOND, VIRGINIA 23230
(804) 358-9141 FAX(804) 359-5715

SHEET TITLE: MECHANCAL CONTROLS

DRAWN	RTH
CHECKED	BKS
RWA NO.	189001
DATE	8/17/06

DRAWING NO. M3.1
SHEET ___ OF ___

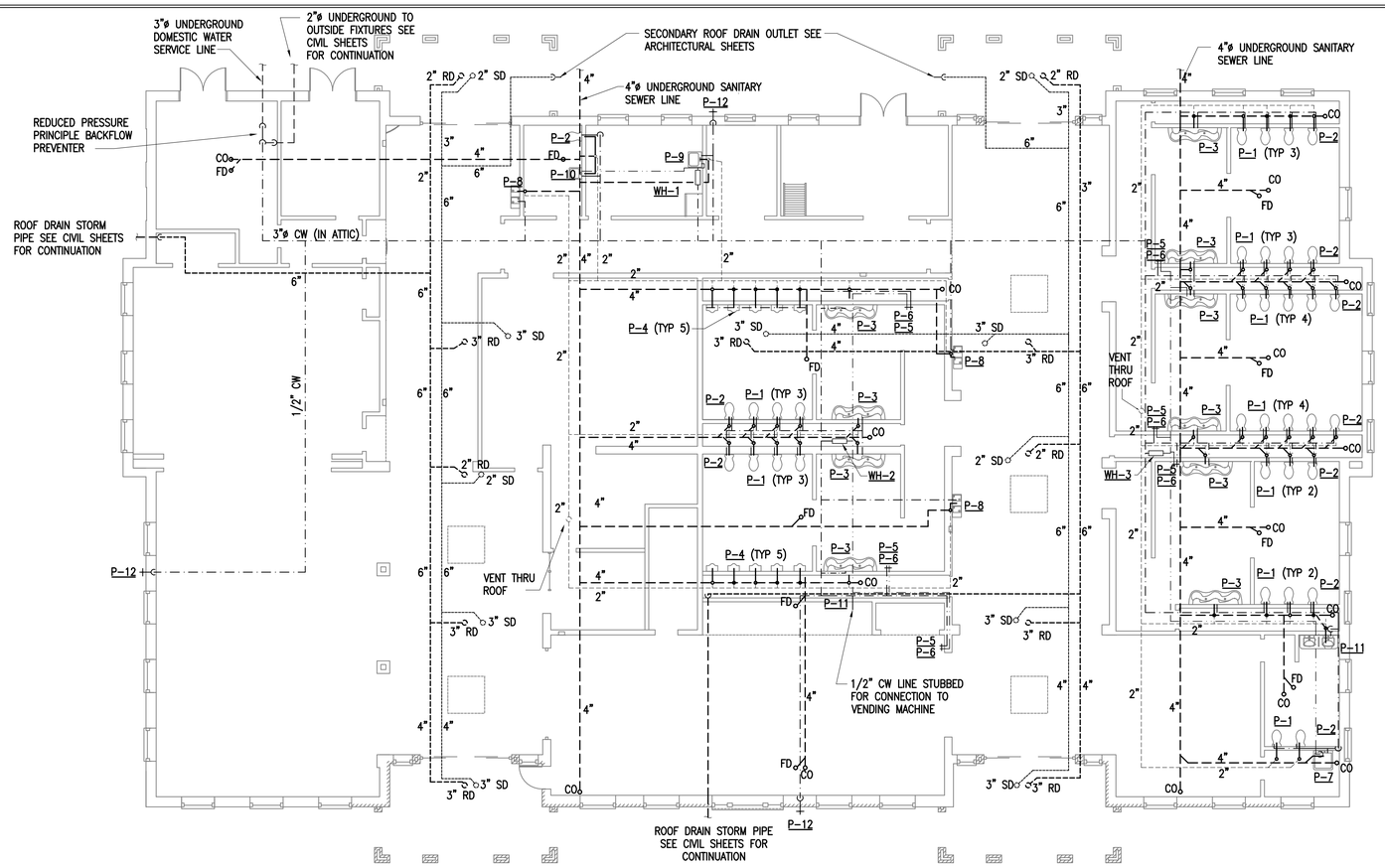

PLAN NORTH

PLUMBING PLAN

SCALE: 1/8"=1'-0"

LEGEND

	COLD WATER LINE (ABOVEGROUND)
	COLD WATER LINE (BURIED)
	TEMPERED WATER LINE
	SEWER LINES
	VENT LINES
	ROOF DRAIN LINE
	SECONDARY ROOF DRAIN LINE
CW	COLD WATER
HW	HOT WATER
	GATE VALVE
	CHECK VALVE
	REDUCER
P-5 P-6	HOSE BIBB
P-12	WALL HYDRANT
	WATER HAMMER ARRESTOR
FD	FLOOR DRAIN
RD	ROOF DRAIN
SD	SECONDARY ROOF DRAIN
CO	CLEAN OUT
FD	FLOOR DRAIN, ISOMETRIC
VTR	VENT THROUGH ROOF, ISOMETRIC
CO	CLEAN-OUT, ISOMETRIC

PLUMBING NOTES:

1. ALL FIXTURES SHALL BE PROVIDED WITH SHUT-OFF VALVES.
2. FOR PIPE SIZES NOT SHOWN, REFER TO ISOMETRICS AND THE FIXTURE SCHEDULE.
3. INSULATE ALL ABOVEGROUND HOT AND COLD WATER LINES.
4. MINIMUM SLOPE ON SEWER/VENT LINES SHALL BE 1/4" PER FOOT FOR PIPE LESS THAN 2 1/2" DIAMETER AND 1/8" PER FOOT FOR PIPE THAT IS 3" TO 6" DIAMETER.
5. PIPING SHALL BE CONCEALED UNLESS OTHERWISE NOTED.
6. MINIMUM SLOPE OF ROOF DRAIN/SECONDARY ROOF DRAIN LINES SHALL BE 1/8" PER FOOT.

WATER HEATER SCHEDULE

UNIT	STORAGE (GAL)	DEMAND (GPM)	VOLTS/PHASE/HZ	REMARKS
WH-1	–	3.0	240/1/60	INSTANTANEOUS 75° F RISE AT 3 GPM
WH-2	–	2.5	240/1/60	INSTANTANEOUS 75° F RISE AT 2.5 GPM
WH-3	–	2.5	240/1/60	INSTANTANEOUS 75° F RISE AT 2.5 GPM

FIXTURE SCHEDULE

DESCRIPTION	HW	CW	WASTE	VENT
P-1 WATER CLOSET	–	1"	4"	2"
P-2 ADA WATER CLOSET	–	1"	4"	2"
P-3 THREE BASIN LAVATORY	–	1/2"	1 1/2"	1 1/2"
P-4 URINAL	–	–	2"	2"
P-5 COLD WATER HOSE BIBB	–	1/2"	–	–
P-6 HOT WATER HOSE BIBB	1/2"	–	–	–
P-7 SERVICE SINK	3/4"	3/4"	3"	2"
P-8 ELECTRIC WATER COOLER	–	3/4"	1 1/2"	1 1/2"
P-9 KITCHEN SINK	3/4"	3/4"	3"	2"
P-10 SINGLE BASIN LAVATORY	1/2"	1/2"	1 1/2"	1 1/2"
P-11 TWO BASIN LAVATORY	–	1/2"	1 1/2"	1 1/2"
P-11 WALL HYDRANT	–	1/2"	–	–

GRAPHIC SCALE(S):

1/8"=1'-0" 0' 5' 10' 15' 24'

AUSTIN BROCKENBROUGH & ASSOCIATES, L.L.P.
Consulting Engineers
P.O. Box 4800 Chester, Virginia 23831

COMMONWEALTH OF VIRGINIA
BRUCE K. SADLER
No.023864
8/17/06
PROFESSIONAL ENGINEER

VIRGINIA DEPT. OF TRANSPORTATION
FREDERICKSBURG SAFETY REST AREA AND WELCOME CENTER
I-95 SOUTH, FREDERICKSBURG, VIRGINIA
PROJECT CODE: 501-06501-007

Rawlings Wilson & Associates
ARCHITECTS PLANNERS
1100 NORTH THOMPSON STREET
RICHMOND, VIRGINIA 23230
(804) 358-9141 FAX(804) 359-5715

SHEET TITLE: PLUMBING PLAN ABBREVIATIONS & LEGEND

DRAWN RTH
CHECKED BKS
RWA NO. 1890.01
DATE 8/17/06

DRAWING NO. P1.1
SHEET ___ OF ___

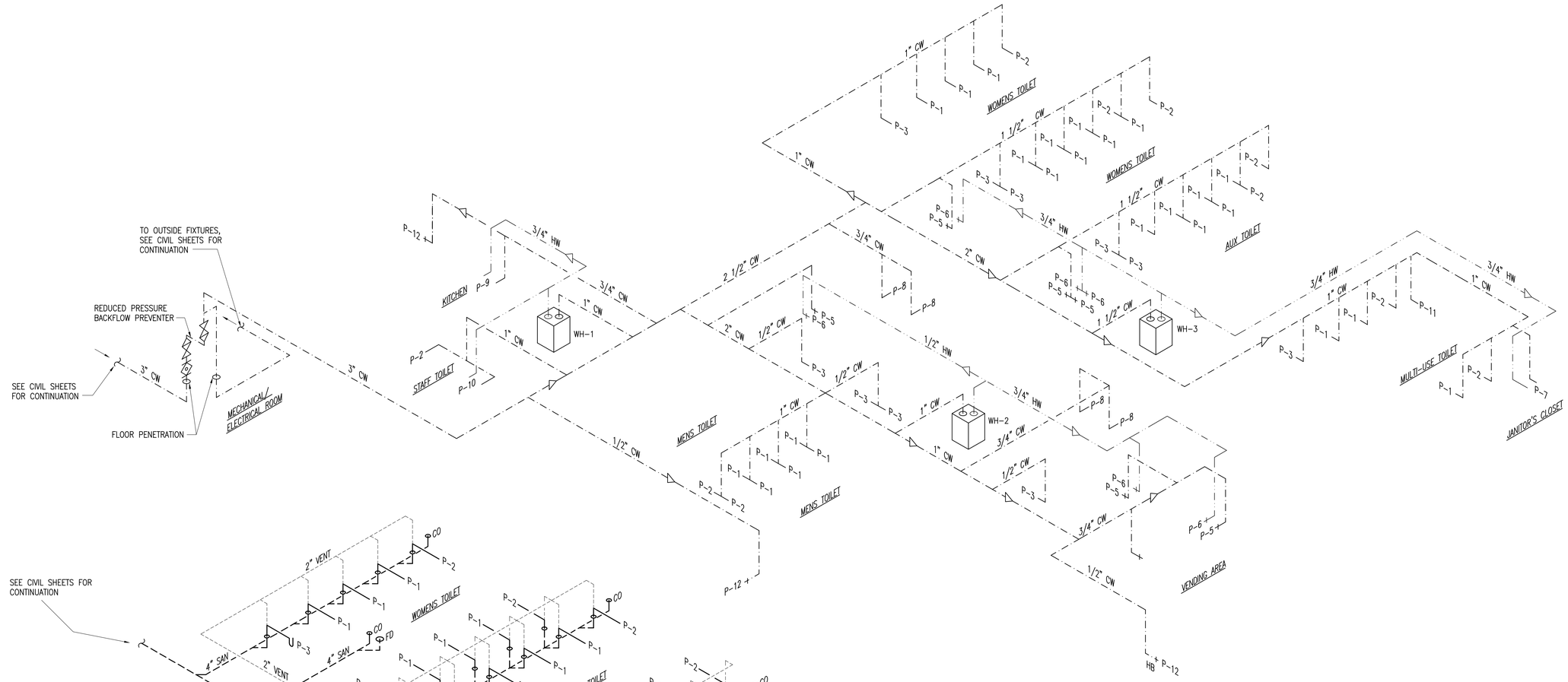

WATER PIPING ISOMETRIC

NO SCALE

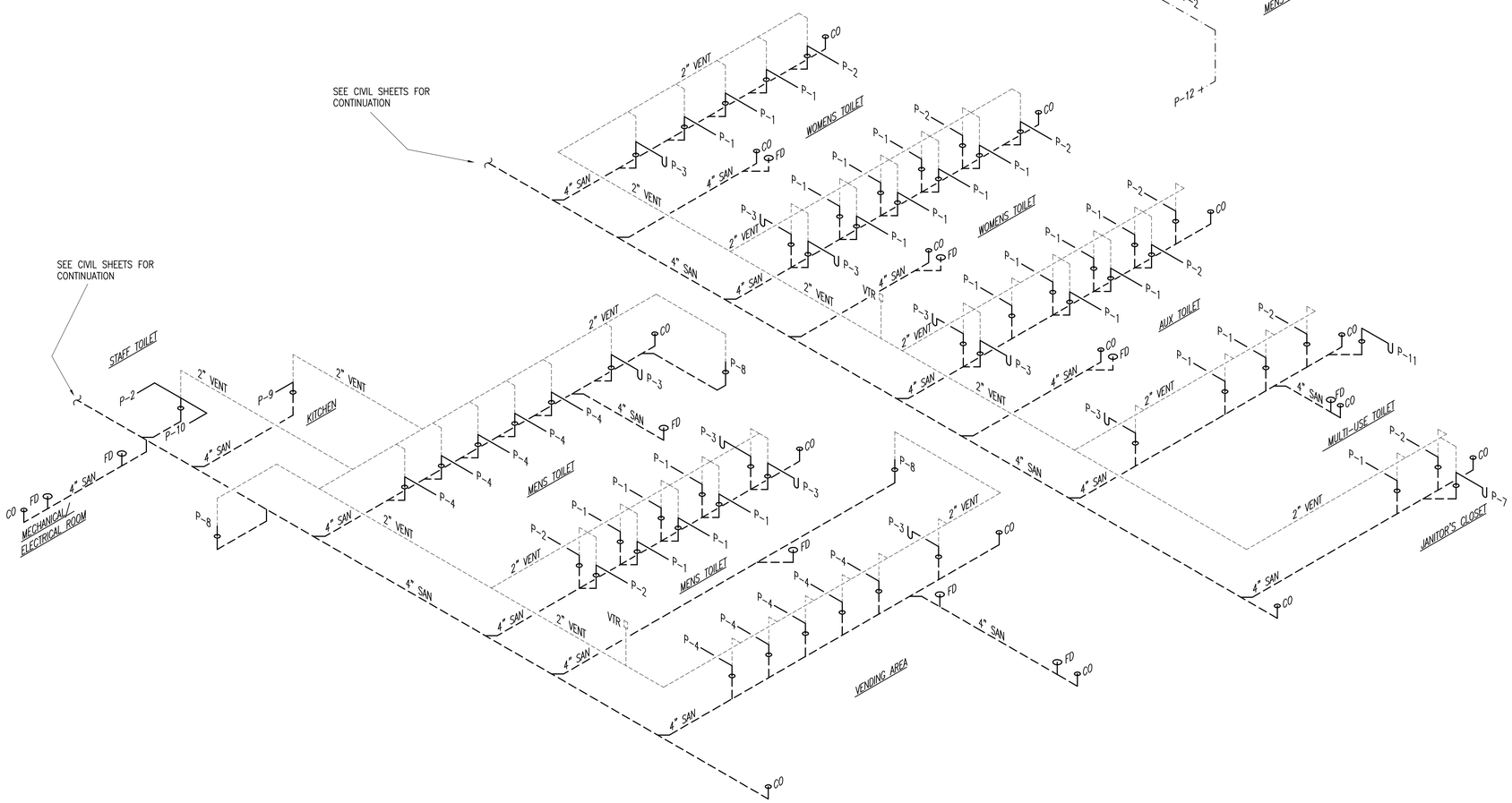

DRAIN, WASTE AND VENT PIPING ISOMETRIC

NO SCALE

AUSTIN BROCKENBROUGH & ASSOCIATES, L.L.P.
Consulting Engineers
P.O. Box 4800 Chester, Virginia 23831

COMMONWEALTH OF VIRGINIA
BRUCE K. SADLER
No.023864
8/17/06
PROFESSIONAL ENGINEER

VIRGINIA DEPT. OF TRANSPORTATION
FREDERICKSBURG SAFETY REST AREA AND WELCOME CENTER
I-95 SOUTH, FREDERICKSBURG, VIRGINIA

PROJECT CODE: 501-06501-007

Rawlings Wilson & Associates
ARCHITECTS PLANNERS
1100 NORTH THOMPSON STREET
RICHMOND, VIRGINIA 23230
(804) 358-9141 FAX(804) 359-5715

SHEET	PLUMBING
TITLE	ISOMETRICS

DRAWN	RTH
CHECKED	BKS
RWA NO.	1890.01
DATE	8/17/06

DRAWING NO. P2.1

SHEET ___ OF ___

LEGEND

S_{mp}	OCCUPANCY SENSOR
	RECEPTACLE, DUPLEX, 120V, 20A, MTD 18" AFF UON
WP,GFI	RECEPTACLE, DUPLEX, 120V, 20A, WITH GROUND FAULT CIRCUIT INTERRUPTER, MTD 18" AFF UON, WP INDICATES WEATHERPROOF
S	SWITCH, SINGLE POLE, 120/277V, 20A
S_3	SWITCH, THREE WAY, 120/277V, 20A
S_4	SWITCH, FOUR 2AY, 120/277V, 20A
S_F	SWITCH, FAN SPEED CONTROL, 120/277V, 20A
2	DEMOLITION NOTE
3P 100 NF 3R	DISCONNECT SWITCH, 3P=# OF POLES, 60 = SWITCH RATING, 40 = FUSE RATING (NF INDICATES NONFUSIBLE, 3R = ENCLOSURE TYPE
J	JUNCTION BOX
LP-1	HOMERUN TO PANEL. PANEL AND CIRCUIT DESIGNATIONS AS INDICATED
OR	BRANCH CIRCUIT OR FEEDER WIRING IN CONDUIT. TICK MARKS INDICATE NUMBER OF CONDUCTORS WHEN IN EXCESS OF SCHEDULE QUANTITIES (TYPICALLY UNSWITCHED CONDUCTORS); (/) INDICATES GROUND
20FC	DESIGN FOOTCANDLE LEVEL
OS	OCCUPANCY SENSOR
HD	HAND DRYER
E	EQUIPMENT CONNECTION
P3	LIGHT POLE W/IDENTIFICATION
P23	LIGHT POLE W/IDENTIFICATION
JB	JUNCTION BOX
FACP	FIRE ALARM CONTROL PANEL
M	DOWNLIGHT, TYPE AS INDICATED
J	DOWNLIGHT CONNECTED TO EMERGENCY CIRCUIT
C	FLUORESCENT FIXTURE, TYPE AS INDICATED
E	FLUORESCENT FIXTURE CONNECTED TO EMERGENCY CIRCUIT
E	LIGHT FIXTURE, TYPE AS INDICATED
A	HID UPLIGHT, TYPE AS INDICATED
B1	HID UPLIGHT CONNECTED TO EMERGENCY CIRCUIT
H	EXTERIOR LIGHT FIXTURE, TYPE AS INDICATED
	EXIT LIGHT, DIRECTION ARROW INDICATED, TYPE R
P	PHOTO – ELECTRIC CONTROL
B	CALL BUTTON
	TELEPHONE AND COMPUTER OUTLET – 4" SQUARE BOX
TV	TELEVISION JACK MOUNTED 96" AFF UON, WITH RG-6U COAX TO SERVER ROOM
WH	LAVATORY INSTANTANEOUS WATER HEATER
AF	XFMR DISTRIBUTION UNIT FOR AUTOMATIC FLUSH
	FLOOR BOX/OUTLET WITH DUPLEX RECEPTACLE, 120V, 20A, (1) DATA JACK AND (1) TELEPHONE JACK
US	UNDERGROUND SECONDARY CONDUIT
USL	UNDERGROUND SITE LIGHTING CONDUIT
UH	UNIT HEATER

ABBREVIATIONS

A	AMP	kVA	KILOVOLT AMP
AF	AUTOMATIC FLUSH	LC	LIGHTING CONTACTOR
AFF	ABOVE FINISHED FLOOR	LTG	LIGHTING
AFG	ABOVE FINAL GRADE	MAX	MAXIMUM
AHU	AIR HANDLING UNIT	MCB	MAIN CIRCUIT BREAKER
ATS	AUTOMATIC TRANSFER SWITCH	MIN	MINIMUM
BKR	BREAKER	MTD	MOUNTED
BLDG	BUILDING	NF	NON-FUSIBLE
C	CONDUIT OR CONDUCTOR	NO	NUMBER
CB	CIRCUIT BREAKER	P	POLE
CKT	CIRCUIT	PB	PUSHBUTTON
DS	DISCONNECT SWITCH	RECEPT	RECEPTACLE
EXH	EXHAUST	SS	STAINLESS STEEL
FACP	FIRE ALARM CONTROL PANEL	TYP	TYPICAL
GFI	GROUND FAULT CIRCUIT INTERRUPTER	UON	UNLESS OTHERWISE NOTED
		UH	UNIT HEATER
GND	GROUND	V	VOLT
GRS	GALVANIZED RIGID STEEL	W/	WITH
HD	HAND DRYER	WH	WATER HEATER
HTR	HEATER	WP	WEATHERPROOF
JB	JUNCTION BOX	WW	WIREWAY
		XFMR	TRANSFORMER

ELECTRICAL LOAD SUMMARY

CONNECTED LOAD (KVA): 523
DEMAND LOAD (KVA): 518
CONNECTED LOAD (AMPS): 624
DEMAND LOAD (AMPS): 623

GENERAL NOTES:

1. EXISTING UNDERGROUND UTILITIES NOT SHOWN FOR CLARITY. FOR KNOWN EXISTING UNDERGROUND UTILITIES, SEE CIVIL SHEETS.
2. AN EQUIPMENT GROUND WIRE SHALL BE RUN WITH ALL FEEDERS AND BRANCH CIRCUITS. PROVIDE BONDING CONDUCTOR BETWEEN SERVICE DISCONNECTS AND COLD WATER PIPE IN ACCORDANCE WITH NEC 250.104.
3. ALL WIRING SHALL BE THWN/THHN-2, UON. ELECTRICAL WORK SHALL BE DONE AS PER 2005 NATIONAL ELECTRICAL CODE (NEC).
4. ALL ELECTRICAL EQUIPMENT SHALL BE IDENTIFIED AND LABELED. ALL FEEDERS/CIRCUITS SHALL BE IDENTIFIED AT EACH END OF THE WIRE AND AT EVERY SPLICE OR JUNCTION/PULL BOX.
5. PROVIDE NAMEPLATES ON THE EXTERIOR OF ALL ELECTRICAL PANELS AND ENCLOSURES AS FOLLOWS:

PANEL "L"	DEVICE I.D.
100A, 120/208V-3ø, 4W	DEVICE RATING
FEEDS FROM PANEL "MDP"	POWER SOURCE
INSTALLED 2006	INSTALLATION DATE

FOR DISCONNECT SWITCHES AND MOTOR STARTERS THE TOP LINE SHALL BE THE NAME/DESIGNATION OF EQUIPMENT BEING FED BY SAME.

6. COORDINATE WITH ARCHITECTURAL, MECHANICAL AND CIVIL DRAWINGS FOR EXACT LOCATION OF EQUIPMENT REQUIRING ELECTRICAL CONNECTIONS. ADJUST CONDUIT ROUTING, PLACEMENT OF DISCONNECTS AND OTHER EQUIPMENT AS REQUIRED.
7. WHERE INDIVIDUAL 120 VOLT AND 277 VOLT HOMERUNS ARE SHOWN ON THE DRAWINGS, THEY MAY BE COMBINED AS FOLLOWS:
   A. NO MORE THAN THREE PHASE CONDUCTORS PLUS THREE NEUTRALS AND ONE GROUND SHALL BE COMBINED IN A SINGLE CONDUIT UNLESS OTHERWISE NOTED.
   B. EACH CIRCUIT SHALL BE PROVIDED WITH AN INDIVIDUAL NEUTRAL CONDUCTOR. NEUTRALS MAY NO BE SHARED.
   C. CONDUIT SIZE SHALL BE INCREASED AS REQUIRED.

AUSTIN BROCKENBROUGH & ASSOCIATES, L.L.P.
Consulting Engineers
P.O. Box 4800 Chester, Virginia 23831

COMMONWEALTH OF VIRGINIA
CRAIG H. MATTHEWS
No.022359
8-17-06
PROFESSIONAL ENGINEER

VIRGINIA DEPT. OF TRANSPORTATION
FREDERICKSBURG SAFETY REST AREA AND WELCOME CENTER
I-95 SOUTH, FREDERICKSBURG, VIRGINIA

PROJECT CODE: 501-06501-007

Rawlings Wilson & Associates
ARCHITECTS PLANNERS
1100 NORTH THOMPSON STREET
RICHMOND, VIRGINIA 23230
(804) 358-9141 FAX(804) 359-5715

SHEET TITLE: LEGEND, ABBREVIATIONS AND NOTES

DRAWN: RTH
CHECKED: BKS
RWA NO.: 1890.01
DATE: 8/17/06

DRAWING NO. E0.1
SHEET __ OF __

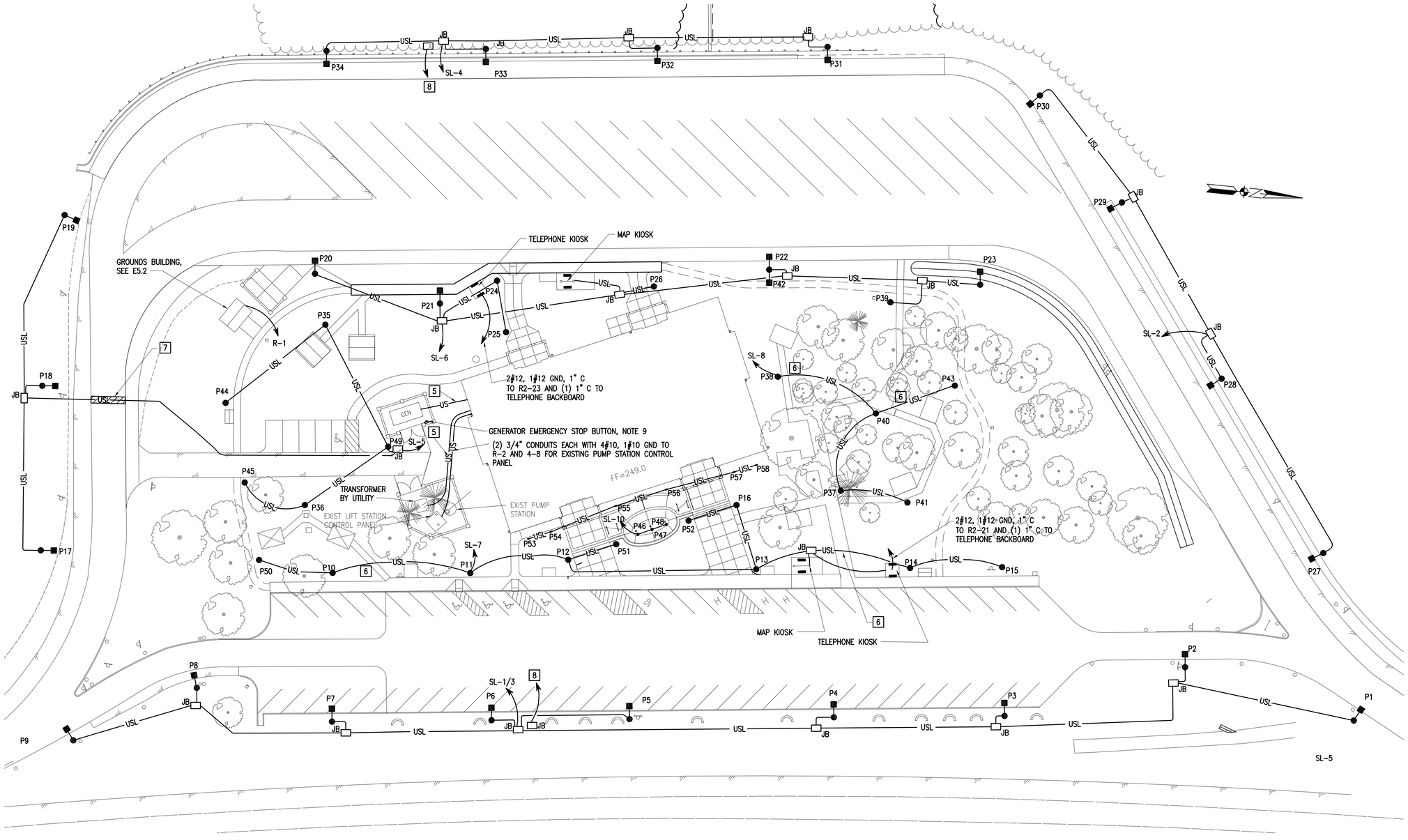

ELECTRICAL SITE PLAN

SCALE: 1"=25'

POLE SCHEDULE

POLE ID	FIXTURE TYPE	CIRCUIT NO	FOUNDATION (NOTE 1)	REMARKS
P1	SB	SL-3	LF-1, TYPE B	FRANGIBLE BASE
P2	SB	SL-3	LF-1, TYPE B	FRANGIBLE BASE
P3	SA	SL-3	LF-1, TYPE B	
P4	SA	SL-3	LF-1, TYPE B	
P5	SA	SL-3	LF-1, TYPE B	
P6	SA	SL-1	LF-1, TYPE B	
P7	SA	SL-1	LF-1, TYPE B	
P8	SB	SL-1	LF-1, TYPE B	FRANGIBLE BASE
P9	SB	SL-1	LF-1, TYPE B	FRANGIBLE BASE
P10	SC	SL-7	LF-1, TYPE A	
P11	SC	SL-7	LF-1, TYPE A	
P12	SC	SL-7	LF-1, TYPE A	
P13	SC	SL-7	LF-1, TYPE A	
P14	SC	SL-7	LF-1, TYPE A	
P15	SC	SL-7	LF-1, TYPE A	
P16	SC	SL-7	LF-1, TYPE A	
P17	SB	SL-5	LF-1, TYPE B	
P18	SB	SL-5	LF-1, TYPE B	
P19	SA	SL-5	LF-1, TYPE B	
P20	SA	SL-6	LF-1, TYPE B	
P21	SA	SL-6	LF-1, TYPE B	
P22	SA	SL-6	LF-1, TYPE B	
P23	SA	SL-6	LF-1, TYPE B	
P24	SC	SL-6	LF-1, TYPE A	
P25	SC	SL-6	LF-1, TYPE A	
P26	SC	SL-6	LF-1, TYPE A	
P27	SB	SL-2	LF-1, TYPE B	
P28	SB	SL-2	LF-1, TYPE B	
P29	SB	SL-2	LF-1, TYPE B	
P30	SA	SL-2	LF-1, TYPE B	
P31	SA	SL-4	LF-1, TYPE B	
P32	SA	SL-4	LF-1, TYPE B	
P33	SA	SL-4	LF-1, TYPE B	
P34	SA	SL-4	LF-1, TYPE B	
P35	SC	SL-5	LF-1, TYPE A	
P36	SC	SL-5	LF-1, TYPE A	
P37	SC	SL-8	LF-1, TYPE A	
P38	SC	SL-8	LF-1, TYPE A	
P39	SC	SL-8	LF-1, TYPE A	
P40	SC	SL-8	LF-1, TYPE A	
P41	SC	SL-8	LF-1, TYPE A	
P42	SB	SL-6	*	
P43	SC	SL-8	LF-1, TYPE A	
P44	SC	SL-5	LF-1, TYPE A	
P45	SC	SL-5	LF-1, TYPE A	
P46	SD	SL-10	NOTE 2	
P47	SD	SL-10	NOTE 2	
P48	SD	SL-10	NOTE 2	
P49	SC	SL-5	LF-1, TYPE A	
P50	SC	SL-7	LF-1, TYPE A	
P51	SC	SL-7	LF-1, TYPE A	
P52	SC	SL-7	LF-1, TYPE A	
P53	SE	SL-11	DETAIL, E-XXX	
P54	SE	SL-11	DETAIL, E-XXX	
P55	SE	SL-11	DETAIL, E-XXX	
P56	SE	SL-11	DETAIL, E-XXX	
P57	SE	SL-11	DETAIL, E-XXX	
P58	SE	SL-11	DETAIL, E-XXX	

* MOUNTED ON SAME POLE AS P22

SITE LIGHTING NOTES:

1. FOUNDATIONS ARE BASED ON VDOT ROAD AND BRIDGE STANDARDS.
2. MOUNT FLAG POLE LIGHTS IN PLAZA AREA AS RECOMMENDED BY MANUFACTURER. SEE PLAZA AREA DETAIL ON ARCHITECTURAL SHEETS FOR LOCATION OF LIGHTS. PROVIDE LIGHTS WITH DOMED ROCKGUARD. ADJUST DISTANCE FROM POLE AS RECOMMENDED BY MANUFACTURER.

EXTERIOR LIGHTING FIXTURE SCHEDULE

FIXTURE ID	MANUFACTURER	MODEL NUMBER	NUMBER AND TYPE OF LAMPS	VOLTAGE	REMARKS
SA	LITHONIA	AS2 400S SR4SC 277 RPA SF	(1) 400W HPS	277	W/40 FT POLE, ROUND TAPERED ALUMINUM TYPE 4 (FORWARD THROW) DISTRIBUTION WITH SHARP REAR CUTOFF
SB	LITHONIA	AS1 150S SR4SC 277 RPA SF	(1) 150W HPS	277	W/40 FT POLE TYPE 4 (FORWARD THROW) DISTRIBUTION WITH SHARP REAR CUTOFF
SC	ARCHITECTURAL AREA LIGHTING	ALN445 H5 150HPS CND	(1) 150W HPS	277	IES FULL CUTOFF W/14' POLE FLUTED POLE # DB10 5F14-188
SD	KIM	LTV710	(1) 70W MH	277	FLAG POLE LIGHT
SE	HYDREL	7000 42TRT 277 FL KM SF DDB	(1) 42W TRT CF	277	BUILDING FACADE LIGHT

EXTERIOR LIGHTING NOTES:

1. MANUFACTURERS AND MODEL NUMBERS LISTED IN SCHEDULE ARE FOR BASIS OF DESIGN AND COMPARISON ONLY. FIXTURES AND MODELS FROM OTHER MANUFACTURERS INCLUDING BUT NOT LIMITED TO HOLOPHANE, GENERAL ELECTRIC AND ARCHITECTURAL AREA LIGHTING, KING AND HYDREL ARE ACCEPTABLE IF THEY HAVE SIMILAR DESIGN FEATURES, APPEARANCES AND PHOTOMETRICS.

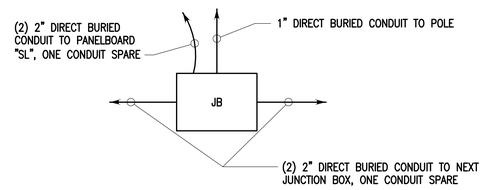

TYPICAL SITE LIGHTING WIRING TYPE SA/SB/SC POLES

EXTERIOR SITE NOTES:

1. ALL JUNCTION BOXES SHALL BE 11"x18"x18" (NOMINAL) POLYMER CONCRETE, ANSI/SCTE 77 2002 TIER 15 WITH GASKETED HEAVY DUTY COVERS.
2. PROVIDE JUNCTION BOX ON ALL CONDUITS STUBBED OUT FOR FUTURE USE.
3. CONTOURS AND LANDSCAPING NOT SHOWN FOR CLARITY. SEE CIVIL AND LANDSCAPE DRAWINGS FOR ADDITIONAL INFORMATION. ROUTE CONDUIT AND PLACE JUNCTION BOXES SO THAT THEY DO NOT INTERFERE WITH LANDSCAPING OR DRAINAGE STRUCTURES.
4. PROVIDE (2) 2" CONDUITS BETWEEN ALL SITE LIGHTING JUNCTION BOXES. CIRCUITS SHALL BE INSTALLED IN ONE CONDUIT WITH THE OTHER SPARE.

5 SEE ELECTRICAL RISER DIAGRAM ON E5.1.

6 INSTALL CONDUIT WITHOUT DISTURBING EXIST SIDEWALKS (TYP).

7 CONCRETE PAVEMENT PATCH SEE C7.1 (TYP FOR ALL CONDUITS IN EXIST PAVEMENT)

8 (2) 2" CONDUITS FOR FUTURE CCTV, SEE E2.1 FOR CONTINUATION.

9. MOUNT GENERATOR EMERGENCY STOP BUTTON ON INSIDE WALL OF BRICK ENCLOSURE. WIRE INTO GENERATOR CONTROL PANEL. PROVIDE 1/2" CONDUIT AND MANUFACTURER RECOMMENDED WIRING.

GRAPHIC SCALE(S):

1"=25' 0' 25' 50' 75'

AUSTIN BROCKENBROUGH & ASSOCIATES, L.L.P.
Consulting Engineers
P.O. Box 4800 Chester, Virginia 23831

COMMONWEALTH OF VIRGINIA
CRAIG H. MATTHEWS
No.022359
8-17-06
PROFESSIONAL ENGINEER

VIRGINIA DEPT. OF TRANSPORTATION
FREDERICKSBURG SAFETY REST AREA AND WELCOME CENTER
I-95 SOUTH, FREDERICKSBURG, VIRGINIA

PROJECT CODE: 501-06501-007

Rawlings Wilson & Associates
ARCHITECTS PLANNERS
1100 NORTH THOMPSON STREET
RICHMOND, VIRGINIA 23230
(804) 359-9141 FAX(804) 359-5715

SHEET TITLE: ELECTRICAL SITE PLAN

DRAWN: RTH
CHECKED: BKS
RWA NO.: 1890.01
DATE: 8/17/06

DRAWING NO. E1.1
SHEET __ OF __

PLAN NOTES (THIS SHEET ONLY):

1. INSTALL 1/2" CONDUIT BETWEEN PANELBOARD "R1" AND OUTLET BOX. PROVIDE BLANK COVER. MOUNT BOX 18" AFF UON.
2. PROVIDE (2) 2" CONDUITS BETWEEN TELEPHONE BACKBOARD AND ATTIC SPACE ABOVE FOYER. TERMINATE IN 18"x18"x6" FIBERGLASS BOX IN ATTIC. PROVIDE (2) 2" CONDUITS BETWEEN SERVER ROOM AND BOX. TERMINATE CONDUITS WITH CAPS AT TELEPHONE BACK BOARD AND 12" BELOW CEILING IN SERVER ROOM.
3. FIELD LOCATE CEILING MOUNTED SPEAKERS.
4. PROVIDE 12"x12"x4"DEEP FLUSH MOUNTED BOX WITH BLANK COVER. SEE TELEPHONE & DATA NETWORK RISER DIAGRAM ON E5.2 FOR REQUIRED CONDUIT. MOUNT BOTTOM OF BOX BOX 12 INCHES ABOVE FINISHED FLOOR.

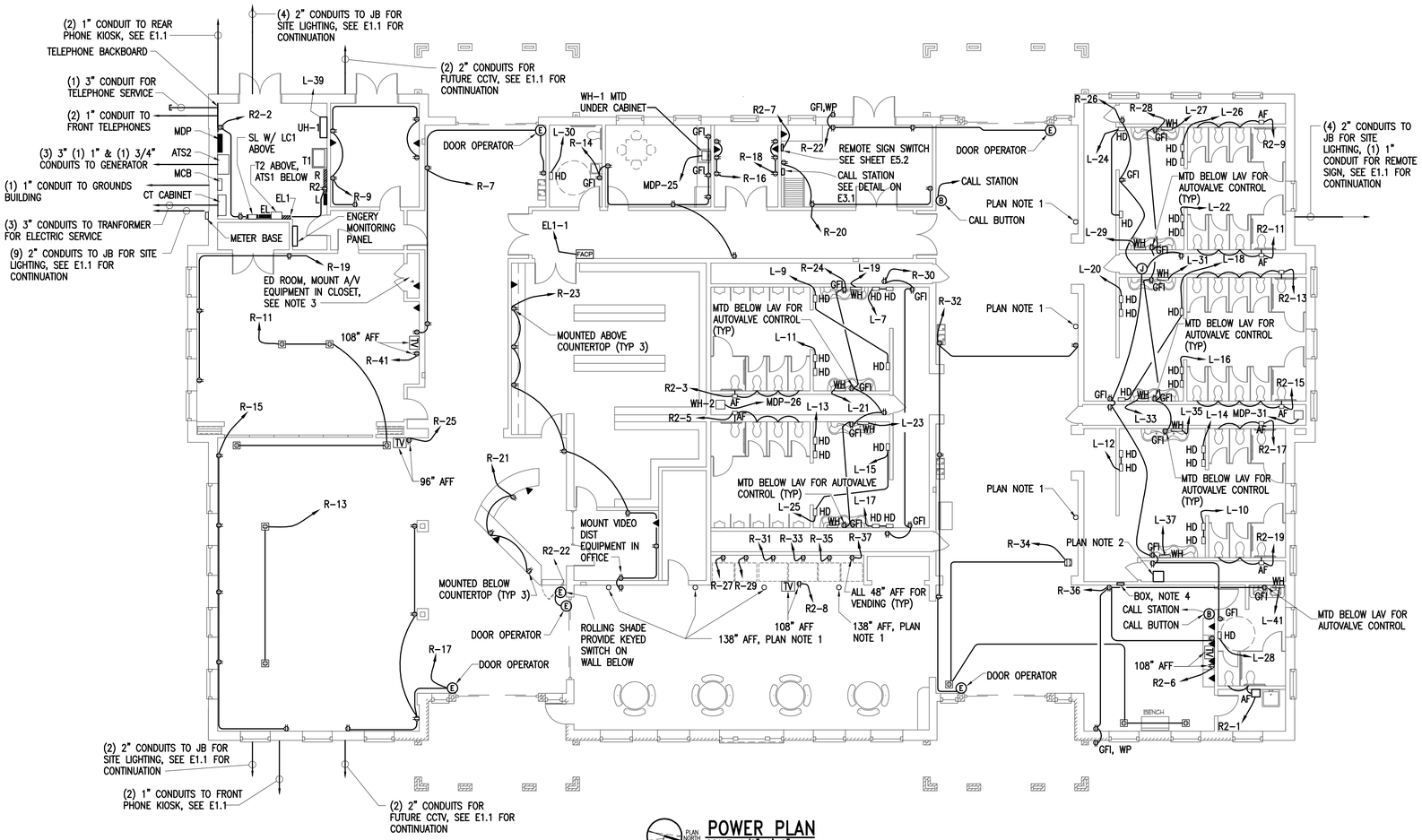

PLAN NORTH

POWER PLAN

SCALE: 1/8"=1'-0"

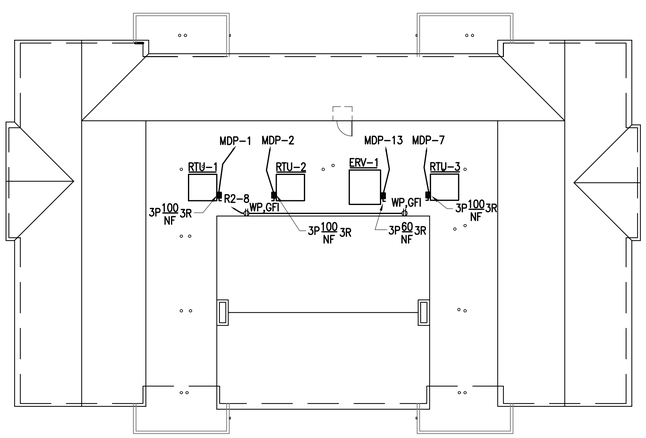

PLAN NORTH

PARTIAL ROOF PLAN

SCALE: 1/16"=1'-0"

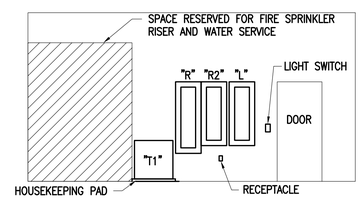

NORTH WALL ELEVATION

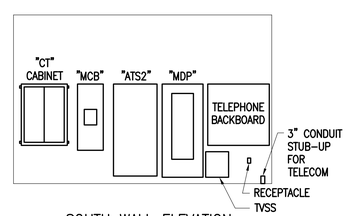

SOUTH WALL ELEVATION

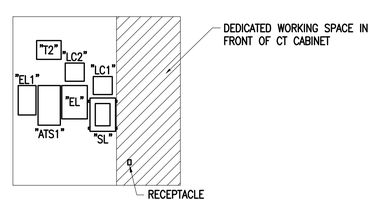

EAST WALL ELEVATION

ELEC/MECH ROOM WALL ELEVATIONS

1/4"=1'-0"

GRAPHIC SCALE(S):

1/16"=1'-0" 10' 0' 10' 20' 30' 40' 50'
1/8"=1'-0" 0' 5' 10' 15' 24'
1/4"=1'-0" 1' 0' 1' 5' 11'

AUSTIN BROCKENBROUGH & ASSOCIATES, L.L.P.
Consulting Engineers
P.O. Box 4800 Chester, Virginia 23831

COMMONWEALTH OF VIRGINIA
CRAIG H. MATTHEWS
No.022359
8-17-06
PROFESSIONAL ENGINEER

VIRGINIA DEPT. OF TRANSPORTATION
FREDERICKSBURG SAFETY REST AREA AND WELCOME CENTER
I-95 SOUTH, FREDERICKSBURG, VIRGINIA
PROJECT CODE: 501-06501-007

Rawlings Wilson & Associates
ARCHITECTS PLANNERS
1100 NORTH THOMPSON STREET
RICHMOND, VIRGINIA 23230
(804) 358-9141 FAX(804) 359-5715

SHEET TITLE	POWER PLAN AND PARTIAL ROOF PLAN
DRAWN	RTH
CHECKED	BKS
RWA NO.	1890.01
DATE	8/17/06
DRAWING NO.	E2.1
SHEET ___ OF ___	

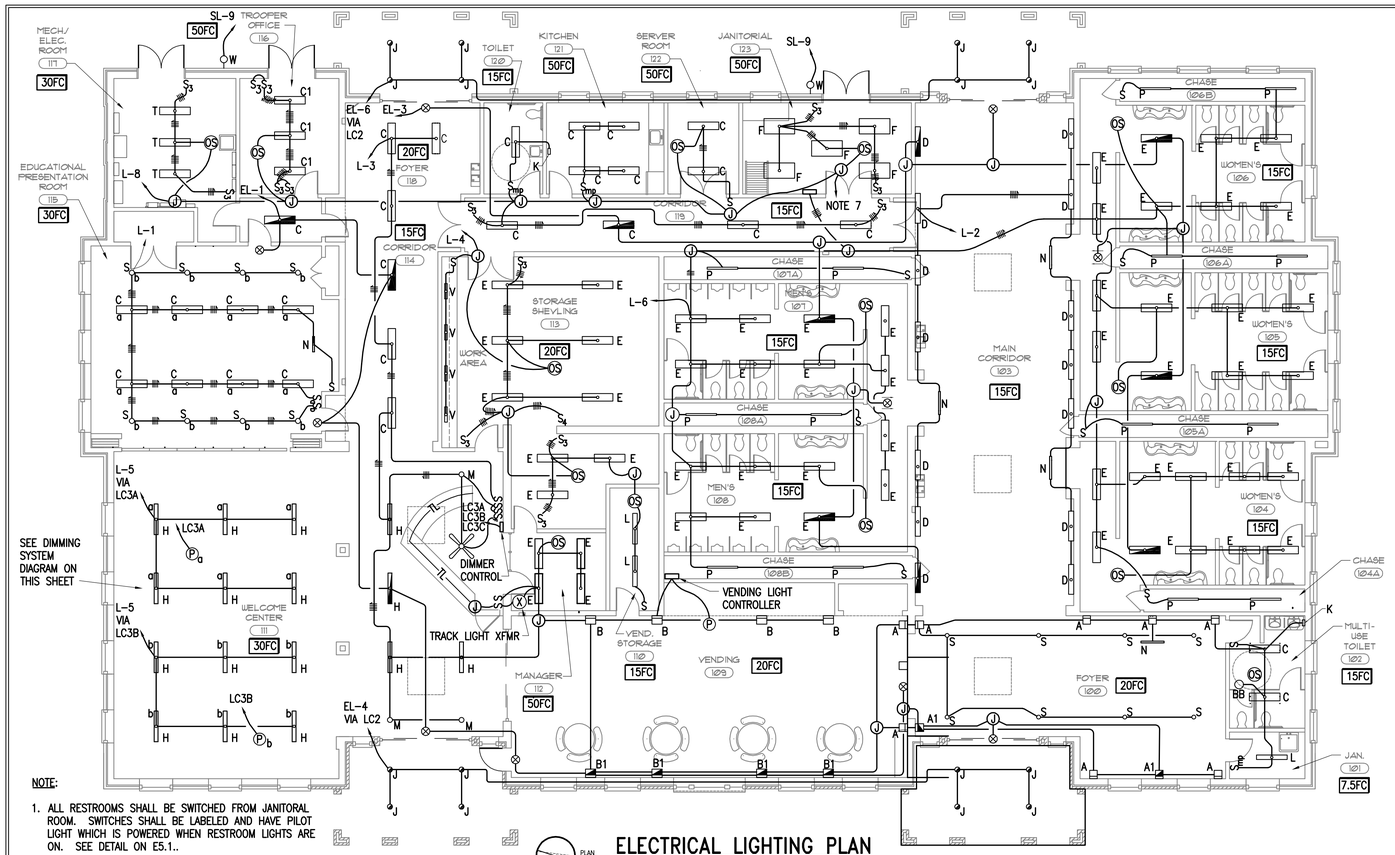

NOTE:

1. ALL RESTROOMS SHALL BE SWITCHED FROM JANITORAL ROOM. SWITCHES SHALL BE LABELED AND HAVE PILOT LIGHT WHICH IS POWERED WHEN RESTROOM LIGHTS ARE ON. SEE DETAIL ON E5.1..

ELECTRICAL LIGHTING PLAN

SCALE: 1/8"=1'-0"

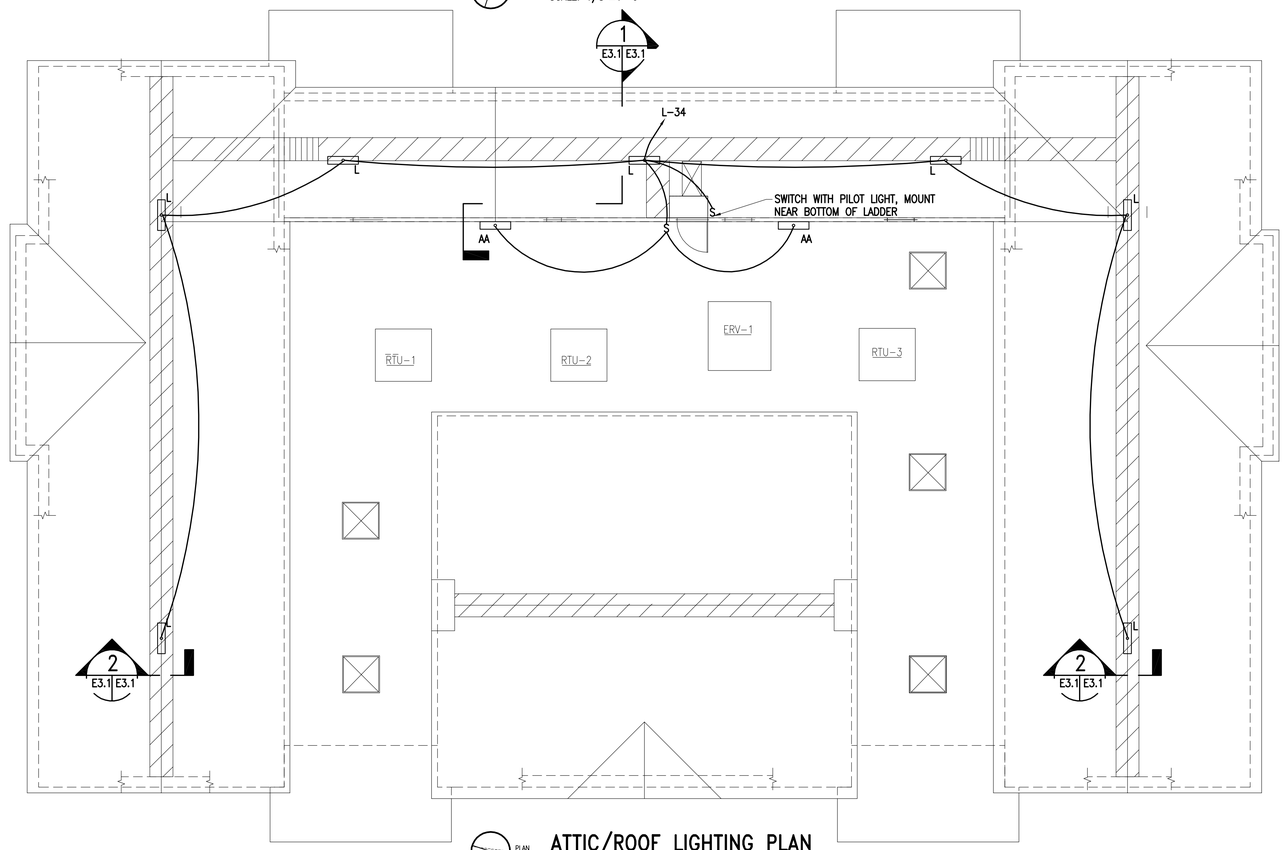

ATTIC/ROOF LIGHTING PLAN

SCALE: 1/8"=1'-0"

INTERIOR/EXTERIOR LIGHTING FIXTURE SCHEDULE

FIXTURE ID	MANUFACTURER	MODEL NUMBER	NUMBER AND TYPE OF LAMPS	VOLTAGE	REMARKS
A	WINONA	P4-SR-MH70-277-SD3-SGW-X-STD	(1) 70W MH	277	INITIAL TILT IS 10° UP
A1	WINONA	SAME AS "A" EXCEPT WITH HOT START QUARTZ RESTRIKE	(1) 70W MH	277	INITIAL TILT IS 10° UP
B	WINONA	P4-SR-MH150-277-SD3-SGW-X-STD	(1) 150W MH	277	INITIAL TILT IS 10° UP
B1	WINONA	SAME AS "B" EXCEPT WITH HOT START QUART RESTRIKE	(1) 150W MH	277	INITIAL TILT IS 10° UP
C	LITHONIA	RT5 2 28T5 MVOLT GEB115	(2) F28T5	277	–
C1	LITHONIA	SAME AS "C" EXCEPT WITH BI-LEVEL SWITCHING	(2) F28T5	277	BI-LEVEL SWITCHING ALLOWS 50% REDUCTION IN OUTPUT
D	PEERLESS	CRW7-1-54T5HO-WHR-277	(1) F54T5HO	277	–
E	LITHONIA	RT5 1 28T5 MVOLT GEB115	(1) F28T5	277	–
F	LITHONIA	2RT5 2 28T5 MVOLT GEB115	(2) F32T8	277	–
G	PEERLESS	LF2FW-2-54T5HO-U5-277	(2) F54T5HO	277	–
H	PEERLESS	7CRM7-2-54T5HO-SPR-277	(2) F54T5HO	277	SUSPEND 24" BELOW CEILING
J	GOTHAM	AH-70-7AR-277	(1) 70W MH	277	–
K	LITHONIA	VG03 32TRT	(1) 32W TRT CF	277	–
L	LITHONIA	CB 2 32	(2) F32T8	277	–
M	GOTHAM	AF 1/57TRT 9AR	(1) 57 W TRT CF	277	–
N	WINONA	LWR9-1-24T5HO	(1) F24T5HO	277	–
P	LITHONIA	S 1 32	(1) F32T8	277	–
R	LITHONIA	EDG SERIES	LED	277	–
S	GOTHAM	AF 1/18TRT 8AR	(1) 18W TRT CF	277	–
T	LITHONIA	L 2 32	(2) F32T8	277	–
TL	–	–	NOTE 2	12V	TRACK LIGHTING, LOW VOLTAGE WITH TRANSFORMER
V	LITHONIA	N2S 17 277 GEB10RS	(1) F17T8	277	–
W	ARCHITECTURAL AREA LIGHTING	ALN440H2 70MH CND WMA-55	(1) 70W MH	277	NOTE 6
AA	LITHONIA	EIS 2 32 MVOLT	(2) F32T8	277	WITH LOW TEMP BALLAST
BB	LITHONIA	ELRG	(1) 8W HALOGEN	277	CONNECT AHEAD OF SWITCH
CC	HYDREL	4754 54T5HO MVOLT WWD TPH	(1) F54T5HO	277	COLOR TO BE DETERMINED IN FIELD

INTERIOR LIGHTING NOTES:

1. MANUFACTURERS AND MODEL NUMBERS LISTED IN SCHEDULE ARE FOR BASIS OF DESIGN AND FOR COMPARISON ONLY. FIXTURES AND MODELS FROM OTHER MANUFACTURERS INCLUDING BUT NOT LIMITED TO COOPER LIGHTING, HYDREL, FINELITE, AND LEDALITE ARE ACCEPTABLE IF THEY HAVE SIMILAR DESIGN FEATURES, APPEARANCES AND PHOTOMETRICS.
2. PROVIDE 25 FEET OF BENDABLE LOW VOLTAGE TRACK LIGHTING TRACK AND THE FOLLOWING FIXTURES:
   A. 3 TOTAL – PENDANT, GLASS LENS
   B. 3 TOTAL – FLOOD, 75W MR16
3. MOUNT TRANSFORMER FOR TRACK LIGHTING ON WALL IN MANAGER'S OFFICE.
4. RESTROOM OCCUPANCY SENSORS SHALL BE PLACED TO SEE "ENTRANCE" VESTIBULE. SENSORS ONLY CONTROL 5 FIXTURES PER RESTROOM. ENTRANCE VESTIBULE FIXTURES SHALL NOT BE CONTROLLED.
5. WELCOME CENTER LIGHTING SHALL INCLUDE TWO DAYLIGHT HARVESTING ZONES. SYSTEM SHALL BE ARRANGED TO ALLOW AUTOMATIC DIMMING OF SECTION OF LIGHTS WHEN DAYLIGHT CONDITIONS ARE ADEQUATE. INITIAL SET-UP SHALL BE SET FOR NIGHTTIME LEVELS SET TO DESIGN LEVELS AND DAYTIME LEVELS SET AT 20% ABOVE DESIGN LEVELS. PROGRAM SYSTEM TO HAVE BALLASTS IN DIMING MODE INITIALLY IF REQUIRED TO ACHIEVE DESIGN LIGHT LEVELS. THIRD ZONE (NEAR RECEPTION DESK SHALL BE SET UP FOR MANUAL DIMMING FROM SAME DIMMING SWITCH LOCATION AS DAYLIGHT HARVESTING MANUAL DIMMING SWITCHES. AN ADDITIONAL SWITCH SHALL BE PROVIDED FOR CONTROL OF DOWNLIGHTS NEAR WELCOME CENTER ENTRANCE AND NEAR THE RECEPTION DESK.
6. TYPE W FIXTURE SHALL MATCH STYLE OF TYPE SC SITE FIXTURES (SEE E1.1) BUT BE APPROXIMATELY 30% SMALLER THAN SC FIXTURES.
7. PROVIDE CIRCUIT TO ATTIC AND ROOF LIGHTING CIRCUIT.

AUSTIN BROCKENBROUGH & ASSOCIATES, L.L.P.
Consulting Engineers
P.O. Box 4800 Chester, Virginia 23831

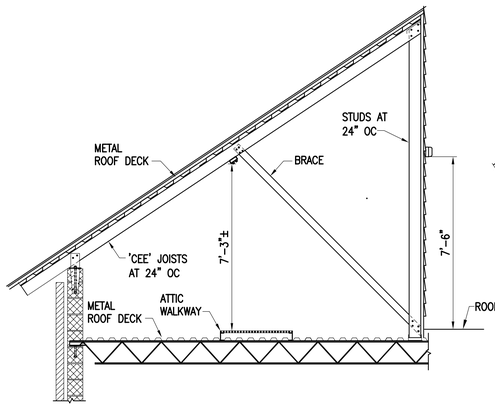

SECTION 1 (E3.1)
3/8"=1'-0"

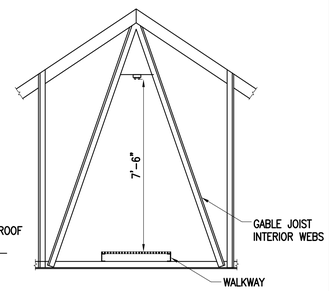

SECTION 2 (E3.1)
3/8"=1'-0"

GRAPHIC SCALE(S):

3/8"=1'-0" 1' 0' 1' 2' 3' 4' 5' 6' 7'
1/8"=1'-0" 0' 5' 10' 15' 24'

COMMONWEALTH OF VIRGINIA
CRAIG H. MATHEWS
No.022359
8-17-06
PROFESSIONAL ENGINEER

VIRGINIA DEPT. OF TRANSPORTATION
FREDERICKSBURG SAFETY REST AREA AND WELCOME CENTER
I-95 SOUTH, FREDERICKSBURG, VIRGINIA

PROJECT CODE: 501-06501-007

Rawlings Wilson & Associates
ARCHITECTS PLANNERS
1100 NORTH THOMPSON STREET
RICHMOND, VIRGINIA 23230
(804) 359-6141 FAX(804) 359-5715

SHEET TITLE: LIGHTING PLAN AND SCHEDULE

DRAWN	RTH
CHECKED	BKS
RWA NO.	1890.01
DATE	8/17/06

DRAWING NO. E3.1
SHEET ___ OF ___

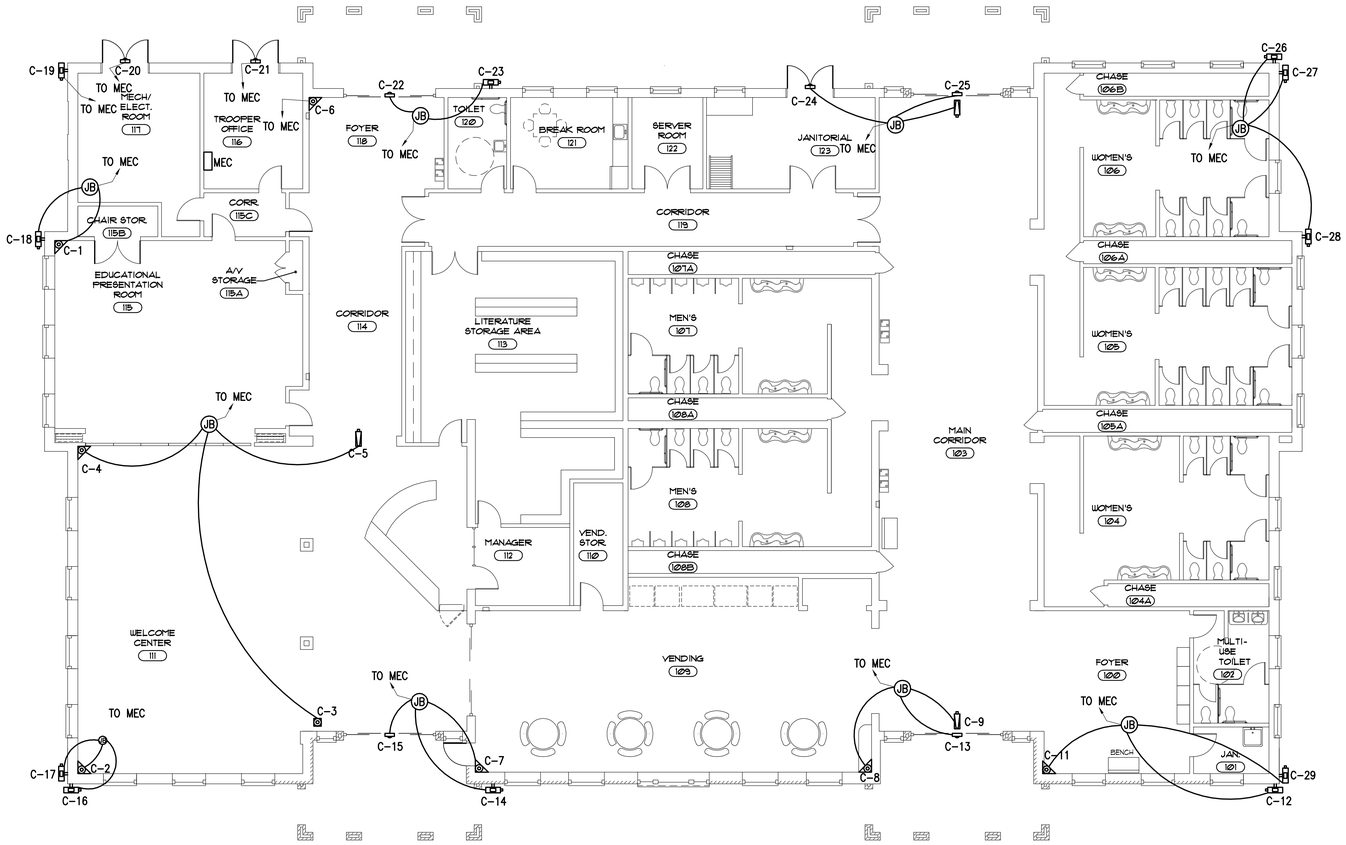

CCTV PLAN

SCALE: 1/8"=1'-0"

LEGEND

- BULLET TYPE CAMERA, INDOOR WEDGE HOUSING, STANDARD LENS
- SURFACE MOUNT DOME CAMERA, WIDE ANGLE LENS
- CORNER MOUNT DOME CAMERA, STANDARD LENS
- BULLET TYPE CAMERA, OUTDOOR HOUSING, ON PEDESTAL MOUNT
- INDOOR DOME CAMERA, CEILING MOUNT, STANDARD LENS

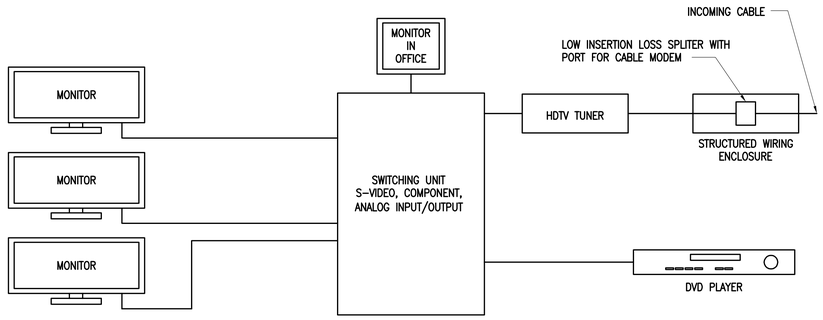

VIDEO DISTRIBUTION SYSTEM

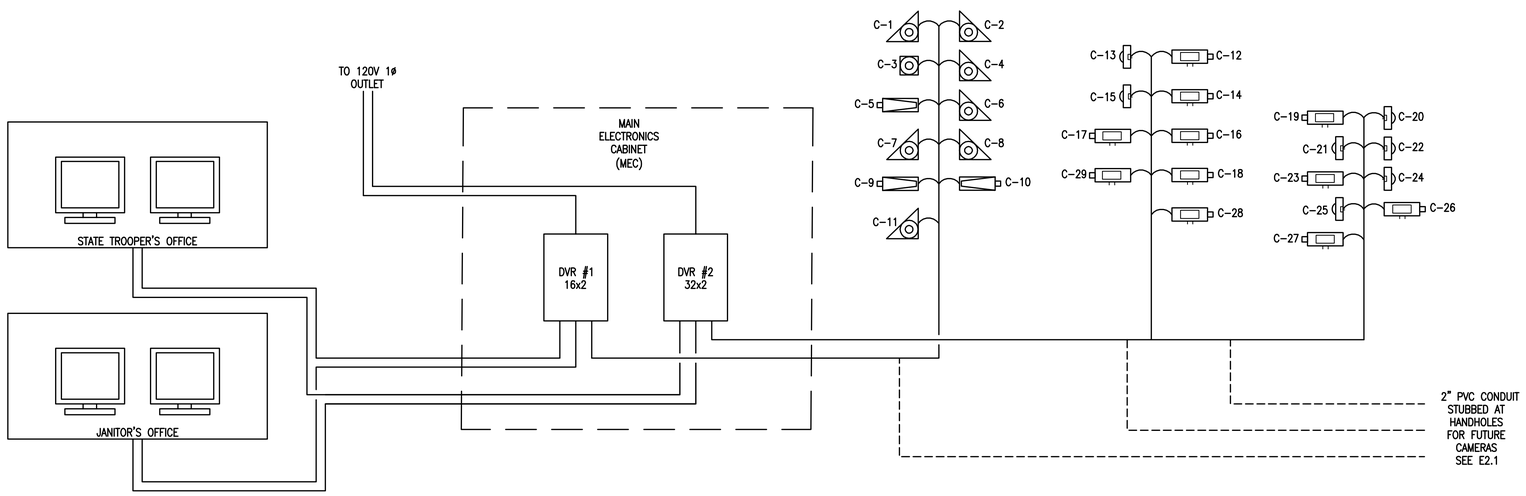

CCTV RISER DIAGRAM

GRAPHIC SCALE(S):

1/8"=1'-0" 0' 5' 10' 15' 24'

AUSTIN BROCKENBROUGH & ASSOCIATES, L.L.P.
Consulting Engineers
P.O. Box 4800 Chester, Virginia 23831

COMMONWEALTH OF VIRGINIA
CRAIG H. MATTHEWS
No.022359
8-17-06
PROFESSIONAL ENGINEER

VIRGINIA DEPT. OF TRANSPORTATION
FREDERICKSBURG SAFETY REST AREA AND WELCOME CENTER
I-95 SOUTH, FREDERICKSBURG, VIRGINIA
PROJECT CODE: 501-06501-007

Rawlings Wilson & Associates
ARCHITECTS PLANNERS
1100 NORTH THOMPSON STREET
RICHMOND, VIRGINIA 23230
(804) 358-6141 FAX(804) 359-5715

SHEET TITLE	CCTV PLAN AND DETAILS
DRAWN	RTH
CHECKED	BKS
RWA NO.	1890.01
DATE	8/17/06
DRAWING NO.	E4.1
SHEET ___ OF ___	

PANELBOARD "MDP"

VOLTAGE: 480Y/277 V
PHASE: 3
WIRE: 4
RATING: 20 KAIC

AMP RATING: 800 A
MAIN TYPE/SIZE: MLO
ENCLOSURE: NEMA 1 SURFACE

CONNECTED LOAD (KVA): 523
DEMAND LOAD (KVA): 518
CONNECTED LOAD (AMPS): 624
DEMAND LOAD (AMPS): 623

CKT NO	CKT BKR TRIP	CKT BKR P	LOAD DESCRIPTION	LOAD KVA	WIRE PHASE	WIRE NEUT	WIRE EGC	CONDUIT	KVA PER PHASE A	KVA PER PHASE B	KVA PER PHASE C	CONDUIT	WIRE PHASE	WIRE NEUT	WIRE EGC	LOAD KVA	LOAD DESCRIPTION	CKT BKR TRIP	CKT BKR P	CKT NO
1	80	3	RTU-1	18.33	3	3	3	1-1/4"	36.66			1-1/4"	3	3	3	18.33	RTU-2	80	3	2
				18.33						36.66						18.33				
				18.33							36.66					18.33				
7	80	3	RTU-3	18.33	3	3	3	1-1/4"	77.04			1-1/4"	250	250	4	58.71	PANELBOARD "L"	250	3	8
				18.33						71.3						52.97				
				18.33							78.33					60.00				
13	40	3	ERV-1	7.22	8	8	8	3/4"	27.59			2"	2/0	2/0	6	20.37	TRANSFORMER T1	150	3	14
				7.22						27.33						20.11				
				7.22							26.99					19.77				
19	30	3	PANELBOARD "SL" (VIA LC1)	4.74	10	10	10	3/4"	5.81			1/2"	10	10	10	1.07	PANELBOARD "EL" (VIA ATS1)	30	3	20
				3.64						4.63						0.99				
				4.55							5.18					0.63				
25	50	3	WATER HEATER-1	11.00	6	6	10	1"	20.15			1"	6	6	8	9.15	WATER HEATER-2	50	3	26
				11.00						20.15						9.15				
				11.00							20.15					9.15				
31	50	3	WATER HEATER-3	9.15	6	6	10	1"	9.25			1/2"	14	14	14	0.1	ENERGY MONITORING SYSTEM	15	3	32
				9.15						9.25						0.1				
				9.15							9.25					0.1				
37	–	–	–	–	–	–	–	–	–			1 1/4"	3	3	6	–	TVSS	100	3	38
39	–	–	–	–	–	–	–	–		–						–				
41	–	–	–	–	–	–	–	–			–					–				
43	–	–	–	–	–	–	–	–	–			–	–	–	–	–	–	–	–	42
45	–	–	–	–	–	–	–	–		–		–	–	–	–	–	–	–	–	44
47	–	–	–	–	–	–	–	–			–	–	–	–	–	–	–	–	–	46
								TOTAL KVA	176.50	169.32	176.56									

PANELBOARD "SL"

VOLTAGE: 480Y/277 V
PHASE: 3
WIRE: 4
RATING: 20 KAIC

AMP RATING: 125 A
MAIN TYPE/SIZE: MLO
ENCLOSURE: NEMA 1 SURFACE

CONNECTED LOAD (KVA): 12.9
DEMAND LOAD (KVA): 12.9
CONNECTED LOAD (AMPS): 16
DEMAND LOAD (AMPS): 16

FED VIA LC1

CKT NO	CKT BKR TRIP	CKT BKR P	LOAD DESCRIPTION	LOAD KVA	WIRE PHASE	WIRE NEUT	WIRE EGC	CONDUIT	KVA PER PHASE A	KVA PER PHASE B	KVA PER PHASE C	CONDUIT	WIRE PHASE	WIRE NEUT	WIRE EGC	LOAD KVA	LOAD DESCRIPTION	CKT BKR TRIP	CKT BKR P	CKT NO
1	20	1	CAR PARK/EXIT LIGHTS	1.16	8	8	8	2"	2.06			2"	8	8	8	0.90	TRUCK ENTRANCE LIGHTS	20	1	2
3	20	1	CAR PARK/ENTRANCE LIGHTS	1.58	12	12	12	2"		3.26		2"	12	12	12	1.68	TRUCK PARK FAR	20	1	4
5	20	1	SOUTH AREA LIGHTS	1.53	12	12	12	2"			4.25	2"	12	12	12	2.72	TRUCK PARK WALKWAY LIGHTS	20	1	6
7	20	1	CAR PARKING WALKWAY LIGHTS	1.89	8	8	8	2"	2.68			2"	–	–	–	0.79	NORTH AREA LIGHTS	20	1	8
9	20	1	WALL MTD EXT LIGHTS	0.16	12	12	12	1/2"		0.38		3/4"	12	12	12	0.22	FLAG POLE LIGHTS	20	1	10
11	20	1	FACADE LIGHTS	0.30	12	12	12	3/4"			0.30	–	–	–	–	–	–	–	–	12
								TOTAL KVA	4.74	3.64	4.55									

PANELBOARD "EL"

VOLTAGE: 480Y/277 V
PHASE: 3
WIRE: 4
RATING: 20 KAIC

AMP RATING: 100 A
MAIN TYPE/SIZE: MLO
ENCLOSURE: NEMA 1 SURFACE

CONNECTED LOAD (KVA): 2.69
DEMAND LOAD (KVA): 2.69
CONNECTED LOAD (AMPS): 3
DEMAND LOAD (AMPS): 3

CKT NO	CKT BKR TRIP	CKT BKR P	LOAD DESCRIPTION	LOAD KVA	WIRE PHASE	WIRE NEUT	WIRE EGC	CONDUIT	KVA PER PHASE A	KVA PER PHASE B	KVA PER PHASE C	CONDUIT	WIRE PHASE	WIRE NEUT	WIRE EGC	LOAD KVA	LOAD DESCRIPTION	CKT BKR TRIP	CKT BKR P	CKT NO
1	20	1	EMER LTS-FOYER,VEND,WC	1.00	12	12	12	1/2"	1.00			–	–	–	–	–	SPACE	20	1	2
3	20	1	EMER LTS-RESTROOMS	0.36	12	12	12	1/2"		0.92		1/2"	12	12	12	0.56	EMER LTS-FRONT ENTRANCE	20	1	4
5	20	1	SPARE	–	12	12	12	1/2"			0.56	1/2"	12	12	12	0.56	EMERG LTS-REAR ENTRANCE	–	–	6
7	20	3	TRANSFORMER T2	0.07	12	12	12	1/2"	0.07			–	–	–	–	–	SPACE	–	–	8
				0.07						0.07		–	–	–	–	–	SPACE	–	–	10
				0.07							0.07	–	–	–	–	–	SPACE	–	–	12
								TOTAL KVA	1.07	0.99	0.63									

PANELBOARD "L"

VOLTAGE: 480Y/277 V
PHASE: 3
WIRE: 4
RATING: 20 KAIC

AMP RATING: 300A
MAIN TYPE/SIZE: MLO
ENCLOSURE: NEMA 1 SURFACE

CONNECTED LOAD (KVA): 171.68
DEMAND LOAD (KVA): 171.68
CONNECTED LOAD (AMPS): 206
DEMAND LOAD (AMPS): 206

CKT NO	CKT BKR TRIP	CKT BKR P	LOAD DESCRIPTION	LOAD KVA	WIRE PHASE	WIRE NEUT	WIRE EGC	CONDUIT	KVA PER PHASE A	KVA PER PHASE B	KVA PER PHASE C	CONDUIT	WIRE PHASE	WIRE NEUT	WIRE EGC	LOAD KVA	LOAD DESCRIPTION	CKT BKR TRIP	CKT BKR P	CKT NO
1	20	1	EDUCATION ROOM LIGHTS	0.92	12	12	12	1/2"	1.81			1/2"	12	12	12	0.89	MAIN CORRIDOR LIGHTS	20	1	2
3	20	1	WELCOME CENTER/VEND LTS	3.44	12	12	12	1/2"		4.14		1/2"	12	12	12	0.70	WELCOME CTR STORAGE LTS	20	1	4
5	20	1	WELCOME CENTER LIGHTS	1.53	12	12	12	1/2"			3.22	1/2"	12	12	12	1.69	RESTROOM LIGHTS	20	1	6
7	20	1	HAND DRYERS-MEN'S BACK	3.05	12	12	12	1/2"	4.57			1/2"	12	12	12	1.52	OFFICE LIGHTS	20	1	8
9	20	1	HAND DRYERS-MEN'S BACK	3.05	12	12	12	1/2"		6.10		1/2"	12	12	12	3.05	HAND DRYERS-WOMEN'S FRONT	20	1	10
11	20	1	HAND DRYERS-MEN'S BACK	3.05	12	12	12	1/2"			6.10	1/2"	12	12	12	3.05	HAND DRYERS-WOMEN'S FRONT	20	1	12
13	20	1	HAND DRYERS-MEN'S FRONT	3.05	12	12	12	1/2"	6.10			1/2"	12	12	12	3.05	HAND DRYERS-WOMEN'S FRONT	20	1	14
15	20	1	HAND DRYERS-MEN'S FRONT	3.05	12	12	12	1/2"		6.10		1/2"	12	12	12	3.05	HAND DRYERS-WOMEN'S MIDDLE	20	1	16
17	20	1	HAND DRYERS-MEN'S FRONT	3.05	12	12	12	1/2"			6.10	1/2"	12	12	12	3.05	HAND DRYERS-WOMEN'S MIDDLE	20	1	18
19	45	1	WH MEN'S LAV BACK	10.0	10	10	10	1/2"	13.05			1/2"	12	12	12	3.05	HAND DRYERS-WOMEN'S MIDDLE	20	1	20
21	45	1	WH MEN'S LAV BACK	10.0	10	10	10	1/2"		13.05		1/2"	12	12	12	3.05	HAND DRYERS-WOMEN'S BACK	20	1	22
23	45	1	WH MEN'S LAV FRONT	10.0	10	10	10	1/2"			13.05	1/2"	12	12	12	3.05	HAND DRYERS-WOMEN'S BACK	20	1	24
25	45	1	WH MEN'S LAV FRONT	10.0	10	10	10	1/2"	13.05			1/2"	12	12	12	3.05	HAND DRYERS-WOMEN'S BACK	20	1	26
27	45	1	WH WOMEN'S LAV BACK	10.0	10	10	10	1/2"		11.53		1/2"	12	12	12	1.53	HAND DRYER-MULTI USE	20	1	28
29	45	1	WH WOMEN'S LAV BACK	10.0	10	10	10	1/2"			11.53	1/2"	12	12	12	1.53	HAND DRYER-EMPLOYEE BATH	20	1	30
31	45	1	WH WOMEN'S LAV MIDDLE	10.0	10	10	10	1/2"	10.13			1/2"	12	12	12	0.13	ROOF SERVICE LIGHTING	20	1	32
33	45	1	WH WOMEN'S LAV MIDDLE	10.0	10	10	10	1/2"		10.55		1/2"	12	12	12	0.55	CATWALK LIGHTING	20	1	34
35	45	1	WH WOMEN'S LAV FRONT	10.0	10	10	10	1/2"			10.00	–	–	–	–	–	–	–	–	36
37	45	1	WH WOMEN'S LAV FRONT	10.0	10	10	10	1/2"	10.00			–	–	–	–	–	–	–	–	38
39	15	1	UNIT HTR MECH ROOM	1.50	12	12	12	1/2"		1.50		–	–	–	–	–	–	–	–	40
41	45	1	WH MULTI USE	10.0	10	10	10	1/2"			10.00	–	–	–	–	–	–	–	–	42
								TOTAL KVA	58.71	52.97	60.00									

PANELBOARD "G"

VOLTAGE: 208Y/120 V
PHASE: 3
WIRE: 4
RATING: 10 KAIC

AMP RATING: 100 A
MAIN TYPE/SIZE: MCB/70 A
ENCLOSURE: NEMA 1 SURFACE

CONNECTED LOAD (KVA): 1.02
DEMAND LOAD (KVA): 1.02
CONNECTED LOAD (AMPS): 2.83A
DEMAND LOAD (AMPS): 2.83

CKT NO	CKT BKR TRIP	CKT BKR P	LOAD DESCRIPTION	LOAD KVA	WIRE PHASE	WIRE NEUT	WIRE EGC	CONDUIT	KVA PER PHASE A	KVA PER PHASE B	KVA PER PHASE C	CONDUIT	WIRE PHASE	WIRE NEUT	WIRE EGC	LOAD KVA	LOAD DESCRIPTION	CKT BKR TRIP	CKT BKR P	CKT NO
1	20	1	RECEPTACLES – INTERIOR	0.72	12	12	12	1/2"	0.12			–	–	–	–	–	SPACE	–	–	2
3	20	1	LIGHTS	0.12	12	12	12	1/2"		0.72		–	–	–	–	–	SPACE	–	–	4
5	20	1	RECEPTACLE – EXTERIOR	0.18	12	12	12	1/2"			0.18	–	–	–	–	–	SPACE	–	–	6
7	–	–	SPACE	–	–	–	–	–	–			–	–	–	–	–	SPACE	–	–	8
9	–	–	SPACE	–	–	–	–	–		–		–	–	–	–	–	SPACE	–	–	10
11	–	–	SPACE	–	–	–	–	–			–	–	–	–	–	–	SPACE	–	–	12
								TOTAL KVA	0.72	0.12	0.18									

PANELBOARD "EL1"

VOLTAGE: 208Y/120 V
PHASE: 3
WIRE: 4
RATING: 10 KAIC

AMP RATING: 100A
MAIN TYPE/SIZE: MCB/30 A
ENCLOSURE: NEMA 1 SURFACE

CONNECTED LOAD (KVA): 0.20
DEMAND LOAD (KVA): 0.20
CONNECTED LOAD (AMPS): 1
DEMAND LOAD (AMPS): 1

CKT NO	CKT BKR TRIP	CKT BKR P	LOAD DESCRIPTION	LOAD KVA	WIRE PHASE	WIRE NEUT	WIRE EGC	CONDUIT	KVA PER PHASE A	KVA PER PHASE B	KVA PER PHASE C	CONDUIT	WIRE PHASE	WIRE NEUT	WIRE EGC	LOAD KVA	LOAD DESCRIPTION	CKT BKR TRIP	CKT BKR P	CKT NO
1	–	1	FIRE ALARM CONTROL PANEL	0.2	12	12	12	1/2"	0.2			–	–	–	–	–	SPACE	–	–	2
3	–	1	SPACE	–	–	–	–	–		–		–	–	–	–	–	SPACE	–	–	4
5	–	1	SPACE	–	–	–	–	–			–	–	–	–	–	–	SPACE	–	–	6
7	–	1	SPACE	–	–	–	–	–	–			–	–	–	–	–	SPACE	–	–	8
9	–	1	SPACE	–	–	–	–	–		–		–	–	–	–	–	SPACE	–	–	10
11	–	1	SPACE	–	–	–	–	–			–	–	–	–	–	–	SPACE	–	–	12
								TOTAL KVA	0.20	0.00	0.00									

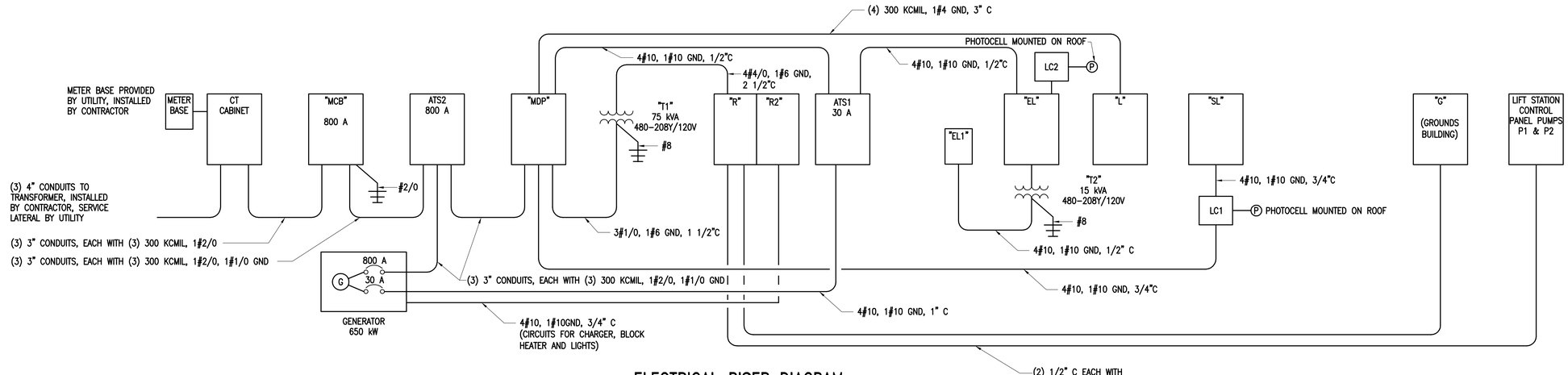

ELECTRICAL RISER DIAGRAM

AUSTIN BROCKENBROUGH & ASSOCIATES, L.L.P.
Consulting Engineers
P.O. Box 4800 Chester, Virginia 23831

COMMONWEALTH OF VIRGINIA
CRAIG H. MATTHEWS
No.022359
8-17-06
PROFESSIONAL ENGINEER

VIRGINIA DEPT. OF TRANSPORTATION
FREDERICKSBURG SAFETY REST AREA AND WELCOME CENTER
I-95 SOUTH, FREDERICKSBURG, VIRGINIA
PROJECT CODE: 501-06501-007

Rawlings Wilson & Associates
ARCHITECTS PLANNERS
1100 NORTH THOMPSON STREET
RICHMOND, VIRGINIA 23230
(804) 358-9141 FAX(804) 359-5715

SHEET PANELBOARD
TITLE SCHEDULES

DRAWN RTH
CHECKED BKS
RWA NO. 1890.01
DATE 8/17/06

DRAWING NO. E5.1
SHEET ___ OF ___

PANELBOARD "R"

VOLTAGE: 208Y/120 V
PHASE: 3
WIRE: 4
RATING: 10 KAIC

AMP RATING: 225 A
MAIN TYPE/SIZE: MCB/225 A
ENCLOSURE: NEMA 1 SURFACE
W/ FEED-THRU LUGS

CONNECTED LOAD (KVA): 55.44
DEMAND LOAD (KVA): 52.44
CONNECTED LOAD (AMPS): 154
DEMAND LOAD (AMPS): 146

CKT NO	CKT BKR TRIP	CKT BKR P	LOAD DESCRIPTION	LOAD KVA	WIRE PHASE	WIRE NEUT	WIRE EGC	CONDUIT	KVA PER PHASE A	KVA PER PHASE B	KVA PER PHASE C	CONDUIT	WIRE PHASE	WIRE NEUT	WIRE EGC	LOAD KVA	LOAD DESCRIPTION	CKT BKR TRIP	CKT BKR P	CKT NO
1	70	3	GROUNDS BUILDING-PNL "G"	0.72	6	6	6	1"	5.35			3/4"	10	10	10	4.63	LIFT STATION PUMP P1	30	3	2
				0.12						4.75						4.63				
				0.18							4.81					4.63				
7	20	1	REAR CORRIDOR RECEPT	1.92	12	12	12	1/2"	6.55			3/4"	10	10	10	4.63	LIFT STATION PUMP P2	30	3	8
9	20	1	TROOPER'S OFFICE RECEPT	0.90	12	12	12	1/2"		5.53						4.63				
11	20	1	WC/ED ROOM FLOOR RECEPT	0.72	12	12	12	1/2"			5.35					4.63				
13	20	1	WC FLOOR RECEPT	0.36	12	12	12	1/2"	1.44			1/2"	12	12	12	1.26	KITCHEN/TOILET RECEPT	20	1	14
15	20	1	WELCOME CENTER RECEPT	0.90	12	12	12	1/2"		1.44		1/2"	12	12	12	0.54	SERVER ROOM RECEPT	20	1	16
17	20	1	CORRIDOR RECEPT	1.92	12	12	12	1/2"			2.46	1/2"	12	12	12	0.54	SERVER ROOM RECEPT	20	1	18
19	20	1	ED ROOM RECEPT	0.54	12	12	12	1/2"	1.08			1/2"	12	12	12	0.54	JANITORIAL ROOM RECEPT	20	1	20
21	20	1	WC DESK RECEPT	0.54	12	12	12	1/2"		2.28		1/2"	12	12	12	1.74	JANITORIAL ROOM RECEPT	20	1	22
23	20	1	STORAGE ROOM RECEPT	1.44	12	12	12	1/2"			2.34	1/2"	12	12	12	0.90	MEN'S ROOMS RECEPT	20	1	24
25	20	1	WELCOME CENTER TV RECEPT	0.18	12	12	12	1/2"	1.62			1/2"	12	12	12	1.44	WOMEN'S ROOM LAVS/CHASES	20	1	26
27	20	1	VENDING MACHINE RECEPT	0.60	12	12	12	1/2"		1.50		1/2"	12	12	12	0.90	WOMEN'S ROOM RECEPT	20	1	28
29	20	1	VENDING MACHINE RECEPT	1.50	12	12	12	1/2"			2.22	1/2"	12	12	12	0.72	MEN'S ROOMS LAVS/CHASES	20	1	30
31	20	1	VENDING MACHINE RECEPT	0.60	12	12	12	1/2"	2.52			1/2"	12	12	12	1.92	MAIN CORRIDOR RECEPT	20	1	32
33	20	1	VENDING MACHINE RECEPT	0.60	12	12	12	1/2"		1.32		1/2"	12	12	12	0.72	FOYER FLOOR RECEPT	20	1	34
35	20	1	VENDING MACHINE RECEPT	0.60	12	12	12	1/2"			1.50	1/2"	12	12	12	0.90	FOYER/MULTI-USE RECEPT	20	1	36
37	20	1	VENDING MACHINE RECEPT	0.60	12	12	12	1/2"	0.60			1/2"	10	10	10	–	TVSS	30	3	38
39	20	1	VENDING MACHINE RECEPT	0.60	12	12	12	1/2"		0.60						–				
41	20	1	EDUCATION ROOM TV RECEPT	0.18	12	12	12	1/2"			0.18					–				
								TOTAL KVA	19.16	17.42	18.86									

PANELBOARD "R2" (SECOND PART OF "R")

VOLTAGE: 208Y/120 V
PHASE: 3
WIRE: 4
RATING: 10 KAIC

AMP RATING: 225 A
MAIN TYPE/SIZE: MLO
ENCLOSURE: NEMA 1 SURFACE

CONNECTED LOAD (KVA): 4.81
DEMAND LOAD (KVA): 3.22
CONNECTED LOAD (AMPS): 13
DEMAND LOAD (AMPS): 9

CKT NO	CKT BKR TRIP	CKT BKR P	LOAD DESCRIPTION	LOAD KVA	WIRE PHASE	WIRE NEUT	WIRE EGC	CONDUIT	KVA PER PHASE A	KVA PER PHASE B	KVA PER PHASE C	CONDUIT	WIRE PHASE	WIRE NEUT	WIRE EGC	LOAD KVA	LOAD DESCRIPTION	CKT BKR TRIP	CKT BKR P	CKT NO
1	15	1	AUTO FLUSH MULTI-USE	0.05	12	12	12	1/2"	0.15			1/2"	14	14	14	0.1	ENERGY MONITORING PANEL	15	1	2
3	15	1	AUTO FLUSH MEN'S BACK	0.05	12	12	12	1/2"		0.59		–	–	–	–	0.54	MECH/ELEC ROOM RECEPT	20	1	4
4	15	1	AUTO FLUSH MEN'S FRONT	0.05	12	12	12	1/2"			0.23	1/2"	12	12	12	0.18	FOYER TV RECEPT	20	1	6
7	15	1	REMOTE SIGN SWITCH	0.1	10	10	10	3/4"	0.46			1/2"	12	12	12	0.36	ROOF RECEPT	20	1	8
9	15	1	AUTO FLUSH WOMEN'S BACK	0.05	12	12	12	1/2"		0.23		1/2"	12	12	12	0.18	VENDING TV RECEPT	20	1	10
11	15	1	AUTO FLUSH WOMEN'S BACK	0.05	12	12	12	1/2"			0.35					0.3				
13	15	1	AUTO FLUSH WOMEN'S MIDDLE	0.05	12	12	12	1/2"	0.35			3/4"	10	10	10	0.3	GENERATOR AUX EQUIPMENT	30	3	12
15	15	1	AUTO FLUSH WOMEN'S MIDDLE	0.05	12	12	12	1/2"		0.35						0.3				
17	15	1	AUTO FLUSH WOMEN'S FRONT	0.05	12	12	12	1/2"			0.15	3/4"	10	10	10	0.1	REMOTE SIGN (NEAR)	20	1	18
19	15	1	AUTO FLUSH WOMEN'S FRONT	0.05	12	12	12	1/2"	0.25			3/4"	10	10	10	0.2	REMOTE SIGN (FAR) XMTR	20	1	20
21	15	1	REAR EXTERIOR TELEPHONES	0.18	12	12	12	1"		1.52		1/2"	12	12	12	1.34	VENDING SHADE AND DOOR	20	1	22
23	15	1	FRONT EXTERIOR TELEPHONES	0.18	12	12	12	1"			0.18	–	–	–	–	–	SPARE	20	1	24
25	–	–	–	–	–	–	–	–	–			–	–	–	–	–	SPARE	20	1	26
27	–	–	–	–	–	–	–	–		–		–	–	–	–	–	–	–	–	28
29	–	–	–	–	–	–	–	–			–	–	–	–	–	–	–	–	–	30
								TOTAL KVA	1.21	2.69	0.91									

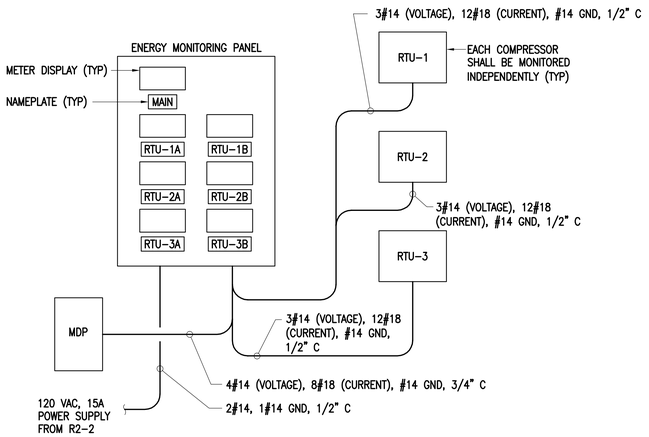

ENERGY MONITORING SYSTEM
NO SCALE

NOTES:

1. PROVIDE TERMINAL BLOCKS FOR ALL WIRING ENTERING ENCLOSURE. PROVIDE 5A FUSED TERMINAL BLOCKS FOR ALL WIRING USED TO SENSE LINE VOLTAGE OF THE MONITORED LOAD.
2. PANEL ENCLOSURE SHALL BE RATED NEMA 3R.

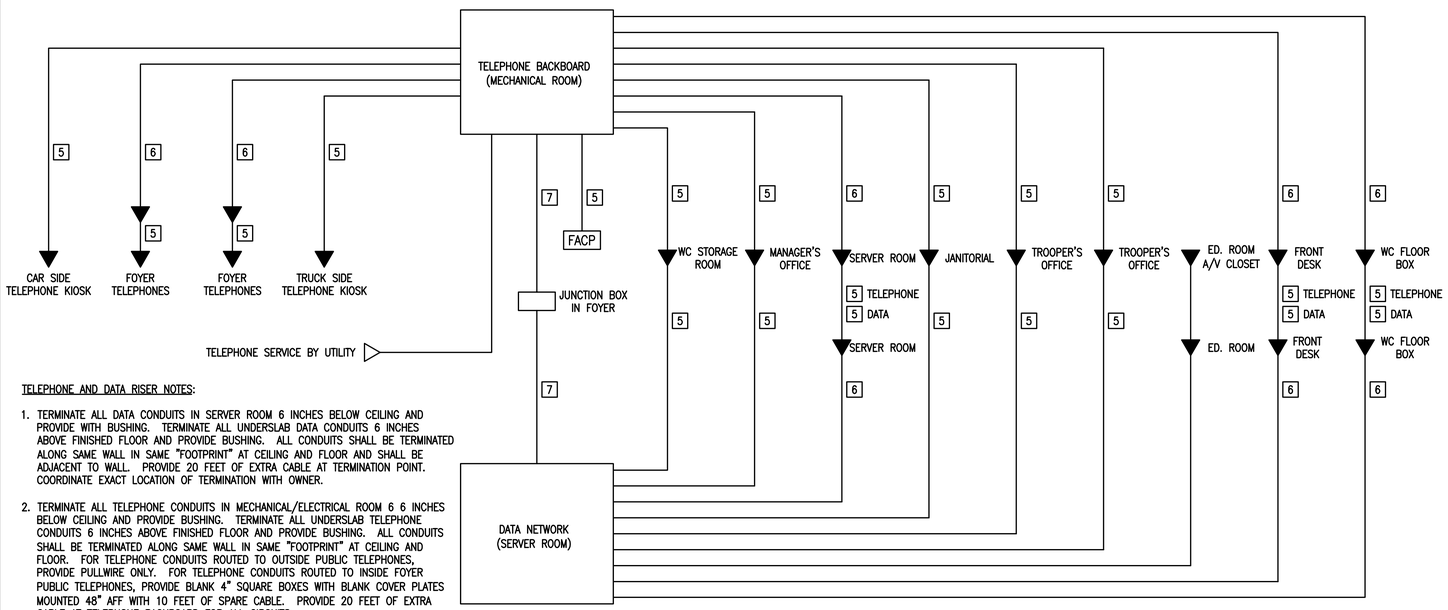

TELEPHONE AND DATA RISER NOTES:

1. TERMINATE ALL DATA CONDUITS IN SERVER ROOM 6 INCHES BELOW CEILING AND PROVIDE WITH BUSHING. TERMINATE ALL UNDERSLAB DATA CONDUITS 6 INCHES ABOVE FINISHED FLOOR AND PROVIDE BUSHING. ALL CONDUITS SHALL BE TERMINATED ALONG SAME WALL IN SAME "FOOTPRINT" AT CEILING AND FLOOR AND SHALL BE ADJACENT TO WALL. PROVIDE 20 FEET OF EXTRA CABLE AT TERMINATION POINT. COORDINATE EXACT LOCATION OF TERMINATION WITH OWNER.
2. TERMINATE ALL TELEPHONE CONDUITS IN MECHANICAL/ELECTRICAL ROOM 6 6 INCHES BELOW CEILING AND PROVIDE BUSHING. TERMINATE ALL UNDERSLAB TELEPHONE CONDUITS 6 INCHES ABOVE FINISHED FLOOR AND PROVIDE BUSHING. ALL CONDUITS SHALL BE TERMINATED ALONG SAME WALL IN SAME "FOOTPRINT" AT CEILING AND FLOOR. FOR TELEPHONE CONDUITS ROUTED TO OUTSIDE PUBLIC TELEPHONES, PROVIDE PULLWIRE ONLY. FOR TELEPHONE CONDUITS ROUTED TO INSIDE FOYER PUBLIC TELEPHONES, PROVIDE BLANK 4" SQUARE BOXES WITH BLANK COVER PLATES MOUNTED 48" AFF WITH 10 FEET OF SPARE CABLE. PROVIDE 20 FEET OF EXTRA CABLE AT TELEPHONE BACKBOARD FOR ALL CIRCUITS.
3. ALL CONDUIT SHALL BE 3/4" UON. NO MORE THAN TWO DATA AND TWO TELEPHONE CABLES MAY BE COMBINED IN A SINGLE 3/4" CONDUIT.
4. EACH TELEPHONE AND DATA OUTLET SHALL BE PROVIDED WITH A DEDICATED CABLE.

5 (1) CAT 6 CABLE

6 (2) CAT 6 CABLE

7 (2) 2" CONDUITS WITH PULL WIRE ONLY. TERMINATE IN 12"x12"x4" CAST IRON FLUSH MOUNT JUNCTION BOX WITH FLUSH COVER. COVER AND TRIM TO BE PAINTED TO MATCH ADJACENT SURFACE.

TELEPHONE & DATA NETWORK RISER DIAGRAM

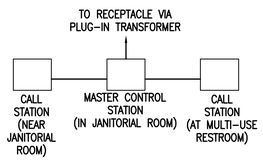

CALL STATION DIAGRAM
SCALE: NONE

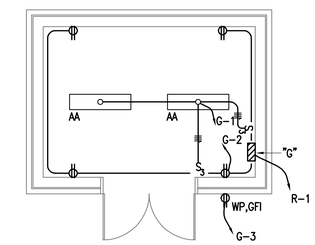

GROUNDS BUILDING PLAN
SCALE: 1/4"=1'-0"

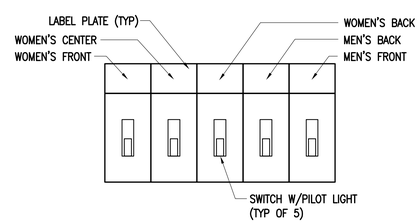

SWITCH INDICATOR DETAIL
SCALE: NONE

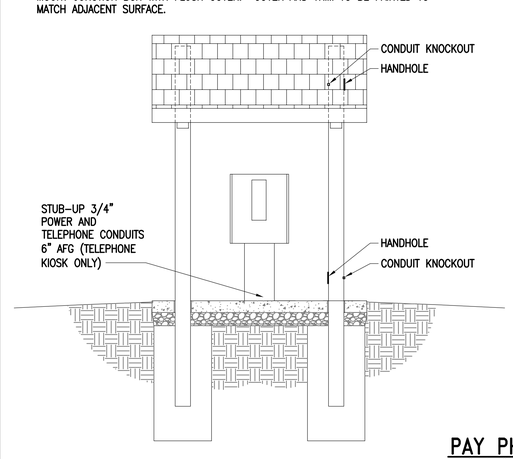

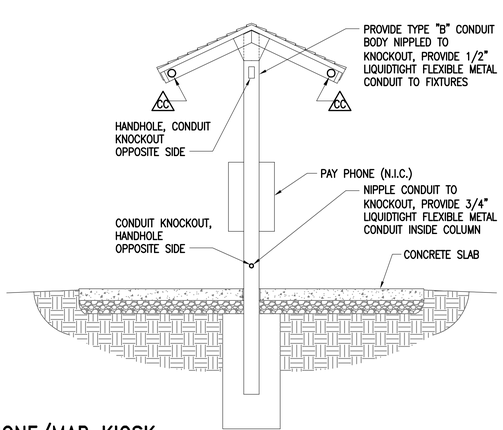

PAY PHONE/MAP KIOSK
3/8"=1'-0"

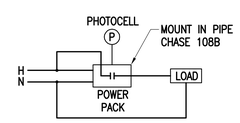

VENDING AREA LIGHTING CONTROL
SCALE: NONE

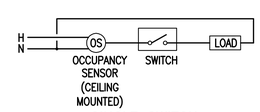

SINGLE SWITCH

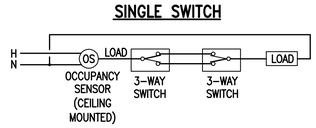

THREE-WAY SWITCHES

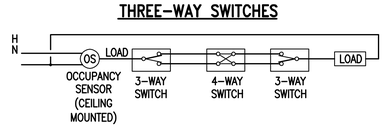

FOUR-WAY SWITCHES

TYPICAL OCCUPANCY SENSOR WIRING DIAGRAM
SCALE: NONE

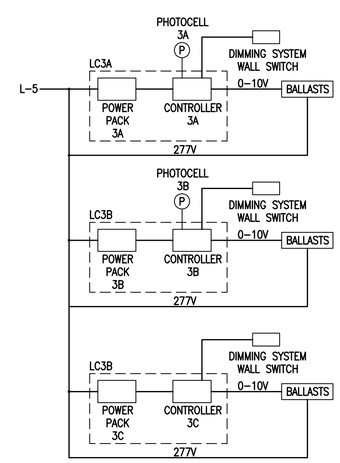

NOTE:

1. POWER PACKS AND CONTROLLERS MOUNTED IN SINGLE ENCLOSURE IN MANAGERS OFFICE.

WELCOME CENTER DIMMING SYSTEM
SCALE: NONE

AUSTIN BROCKENBROUGH & ASSOCIATES, L.L.P.
Consulting Engineers
P.O. Box 4800 Chester, Virginia 23831

COMMONWEALTH OF VIRGINIA
CRAIG H. MATTHEWS
No.022359
8-17-06
PROFESSIONAL ENGINEER

VIRGINIA DEPT. OF TRANSPORTATION
FREDERICKSBURG SAFETY REST AREA AND WELCOME CENTER
I-95 SOUTH, FREDERICKSBURG, VIRGINIA
PROJECT CODE: 501-06501-007

Rawlings Wilson & Associates
ARCHITECTS PLANNERS
1100 NORTH THOMPSON STREET
RICHMOND, VIRGINIA 23230
(804) 358-9141 FAX(804) 359-5715

SHEET TITLE: PANELBOARD SCHEDULES

DRAWN	RTH
CHECKED	BKS
RWA NO.	1890.01
DATE	8/17/06

DRAWING NO. E5.2
SHEET ___ OF ___