ORIGINAL

Response to Request for Proposals

I-64 CAPACITY IMPROVEMENTS - SEGMENT I

Newport News, Virginia

State Project Nos.: 0064-965-264, P101, R201, C501, B616, B617, B618, B619, B620, B621, D601, D602
Federal Project Nos.: NHS-064-3 (479)
Contract ID No.: C00104905DB75

VOLUME I: TECHNICAL PROPOSAL

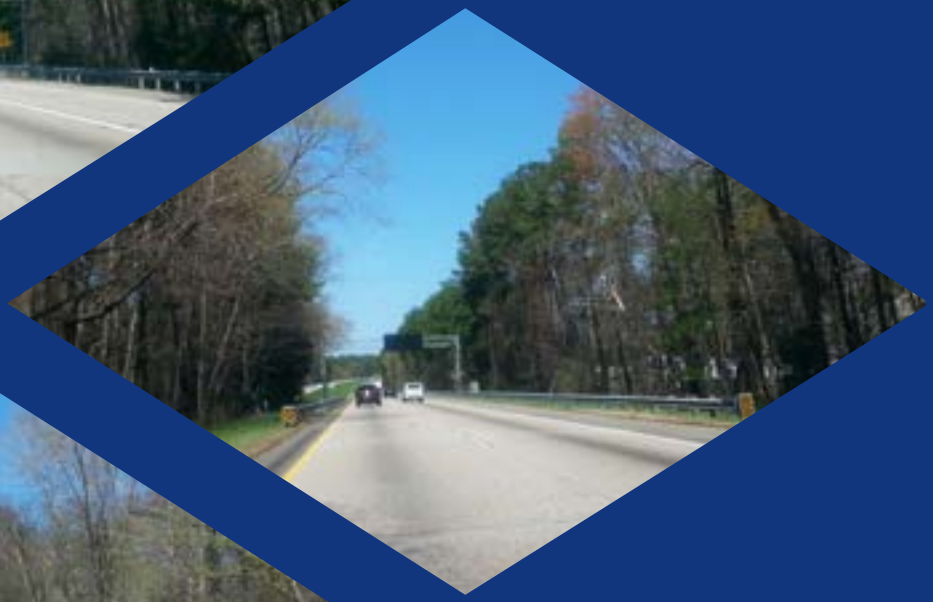

Submitted By:

SHIRLEY CONTRACTING COMPANY, LLC

In Association With:

Dewberry®

4.1 - Letter of Submittal

SHIRLEY
CONTRACTING COMPANY, LLC

December 2, 2014

Mr. Joseph A. Clarke, P.E.
Virginia Department of Transportation
1401 East Broad Street, Annex Building, 8th Floor
Richmond, VA 23219

RE: I-64 Capacity Improvements-Segment I
Newport News, Virginia
Section 4.1 - Letter of Submittal

Dear Mr. Clarke:

Shirley Contracting Company, LLC (Shirley), is pleased to submit this Technical Proposal for the I-64 Capacity Improvements - Segment I Project (the Project). Our Team will provide the Virginia Department of Transportation (VDOT) and the traveling public with an unequaled level of assurance that the Project will be completed successfully and will exceed the priorities established.

4.1.2 - 4.1.3 Declarations: Should Shirley be selected to enter into a contract with VDOT for the Project, it is our intent to do so in accordance with the terms of this Request for Proposal (RFP). Further, the offer represented by our Technical and Price Proposals will remain in full force and effect for one hundred twenty (120) days from the date this Technical Proposal is actually submitted to VDOT.

4.1.4 - Point of Contact: Garry A. Palleschi, Vice President, Shirley Contracting Company, LLC,
8435 Backlick Road, Lorton, VA 22079, 703.550.3579(P), 703.550.9346 (F)
gpalleschi@shirleycontracting.com

4.1.5 - Principal Officer: Michael E. Post, President/CEO/Manager, Shirley Contracting Company, LLC
8435 Backlick Road, Lorton, VA 22079, 703.550.3579(P), 703.550.9346(F)
mpost@shirleycontracting.com

4.1.6 - Final Completion Date: December 1, 2017

4.1.7 - Proposal Payment Agreement: An executed Proposal Payment Agreement, Attachment 9.3.1 is included as an attachment.

4.1.8 - Certification of Debarment: Signed Certification of Debarment Forms are included as an attachment to this Letter of Submittal.

On behalf of our Team, we thank the Virginia Department of Transportation for the opportunity to submit this Technical Proposal in response to your RFP and we look forward to your favorable review.

Sincerely,

Michael E. Post
President/CEO/Manager
Shirley Contracting Company, LLC

4.2 - Offeror’s Qualifications

4.2 - Offeror’s Qualifications

4.2 Offeror's Qualifications

4.2.1 Confirmation

We confirm that the information contained in our Statement of Qualifications (SOQ) remains true and accurate in accordance with Section 11.4.

4.2.2 Organizational Chart

The Project Organizational Chart below identifies the "chain of command" and major functions to be performed and their reporting relationships in managing, designing and constructing the Project, including quality control/quality assurance. As required by Addendum No.1 to the Request for Proposals, we have updated the Organizational Chart to include the firms performing the concrete patching and overlay of the existing interstate pavements and shoulder with THMACO. Denton Concrete Services will perform the concrete patching work and E.J. Breneman, L.P., will perform the THMACO pavement overlay on the Project. The organizational chart now reflects the addition of these firms.

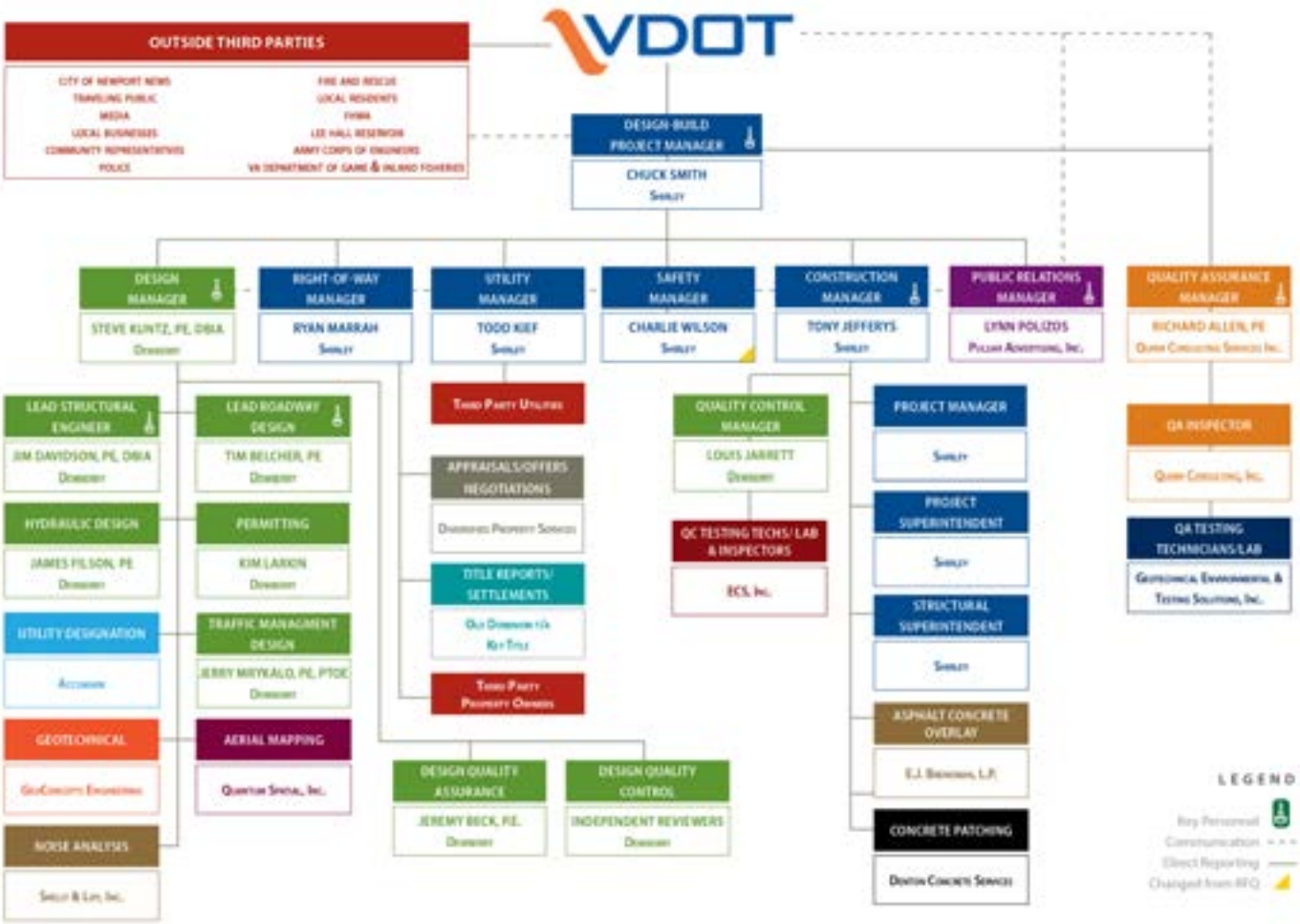

4.2 **Offeror's Qualifications**

The following narrative describes the firms that will perform the Thin Hot Mix Asphalt Concrete Overlay (THMACO), and concrete patching. As subcontractors on the Shirley Team, they will report to the Construction Manager. There is one change from our Statement of Qualifications (SOQ). Charlie Wilson will replace the proposed Safety Manager Randy Reale as he is no longer with the company. This change was submitted to VDOT on November 21, 2014. As there are no other changes to the chain of command, an updated narrative is not required.

E.J. Breneman, L.P. is widely known as a leader in the maintenance and construction of highways ,specifically projects that require pavement reconstruction or rehabilitation. The company has utilized progressive technologies such as the use of Ultra Thin Hot Mix Asphalt Pavement to reduce maintenance costs, save time, and provide a durable pavement surface. E.J. Breneman, L.P. has performed three projects involving the application of THMACO overlay for VDOT. All three projects have been as a subcontractor to Branscome, Inc. One project on I-64 was completed in 2012, one project on I-264 completed in 2013, and another design-build project on I-64 completed in July 2014.

Denton Concrete Services Denton Concrete Services (Denton) has been in business for over 60 years. Over its long history, Denton has worked in 26 states including Virginia and is known as a leading concrete paving contractor. Denton specializes in Concrete Pavement Restoration and Rehabilitation and has provided concrete pavement patching and rehabilitation services on numerous VDOT projects including the I-664 Pavement Rehabilitation Project in the cities of Hampton and Newport News, and the Downtown Expressway Patch and Asphalt Overlay project in Richmond, Virginia. In addition, Denton has recently completed the concrete patching work on the I-64 Pavement Rehabilitation Design-Build Project for Branscome, Inc. in Hampton Roads. As required in the Request for Proposals, we have included a Work History Form (Attachment 4.2.2) in the Appendix for Denton Concrete Services.

4.3 - Design Concept

4.3 - Design Concept

4.3 Design Concept

Introduction

The widening of Interstate 64 is crucial to the City of Newport News, the Hampton Roads area, and the thousands of tourists headed to nearby beaches. We understand that the I-64 Capacity Improvements - Segment I Project (the Project) is the first segment in a series of proposed improvements on the 75-mile corridor between Richmond and Hampton Roads which will address the capacity issues along this critical stretch of roadway.

We have developed a design that will minimize the impacts to motorists while providing an efficient and sustainable design.

Our Team is aware of the current conditions of the existing 4-lane section of I-64, recognizing that the existing traffic volumes exceed the capacity of the road, and that construction of the planned improvements will have an additional impact on the traveling public. Based on our Team's recent and significant experience of Interstate widening projects and the unique challenges they present, we have developed a design that will minimize the impacts to motorists while providing an efficient and sustainable design. ***Our proposed design includes enhancements that exceed the RFP requirements,*** as shown in the attached Volume II Design Concept document, and are described below.

1. ***Replacement of the Industrial Park Drive/CSX Bridges:*** Based on the significant deterioration of the existing bridges, our Team has chosen to replace the existing bridges with more efficient and completely new 2-span structures, rather than widen and rehabilitate them as called for in the RFP. In a further effort to simplify reconstruction of these bridges, we have developed a span arrangement which will locate both the pier and eastern abutment outside of the CSX right-of-way. The existing bridge will be completely demolished in phases so that traffic is maintained at all times, but the end product will provide a virtually maintenance free structure which will be compliant with all current VDOT criteria. The new bridge will also have a longer service life than what would have been provided through rehabilitation of the existing bridge, and avoidance of the railroad right-of-way will simplify both design approvals and long-term maintenance and inspection of the proposed structure.
2. ***Reduced Right-of-Way Impacts:*** The RFP documents identified over 23 acres of impacts to more than 21 properties, mostly associated with construction of stormwater management improvements. Based on our Team's significant experience designing stormwater management facilities under the new Virginia Stormwater Management II-B criteria, we have identified enhancements to the stormwater management concept which will allow us to ***reduce the right-of-way needs by more than 70% as compared to the RFP concept.*** In fact, we have been able to reduce the number of impacted properties from 21 to 12, and anticipate that only 6 acres of right-of-way acquisition will be required to complete the Project. In addition to reducing the right-of-way needs and acquisition costs for the Project, our enhancements will allow us to avoid impacts to sensitive properties, reduce environmental impacts, and reduce impacts to adjacent access roads and developments.
3. ***Vertical Profile Adjustments:*** Our Team has identified adjustments to the vertical profile of I-64 which will maintain the 70mph design speed. It will also minimize impacts to the existing travel lanes during construction through avoidance of significant build-ups or lowering of the roadway, and

will ensure temporary traffic shifts are accounted for during construction when traffic is switched from the existing travel lanes to the proposed travel lanes.

As required by the RFP documents, our Team's concept meets or exceeds all requirements listed in the Design Criteria Table included as Attachment 2.2 of Part 2 of the RFP. Further, our Team's limits of construction for the Project, including the proposed stormwater management facilities, are completely within the existing and/or proposed right-of-way limits shown in the RFP Conceptual Plans with the exception of permanent and temporary easements and locations within the City of Newport News property. Finally, our Team's concept does not include design elements that require Design Exceptions or Design Waivers beyond those identified in the RFP documents.

4.3.1 Conceptual Roadway Plans

Our Team's Conceptual Roadway Plans are included in the Volume II Design Concept document. Descriptions of these Design Concepts and details, including enhancements made to the RFP which exceed the Project requirements are described below.

General Geometry, Horizontal Alignment, and Typical Section

I-64 - Description of Design Concept: The widening of I-64 consists of construction of two (2) additional travel lanes (one in each direction) within the existing median. The improvements to I-64 will be designed in accordance with Interstate-Urban Principal Arterial (GS-5) criteria with a design speed of 70mph. As shown in our Volume II Design Concept, the typical section our Team proposes includes:

- One (1) additional 12' wide thru lane in each direction to provide a six (6) lane typical section;
- Minimum 12' wide paved shoulders in the median in each direction and 14' wide paved shoulders adjacent to proposed median barriers;
- Improvements to three (3) existing median crossovers for emergency response and maintenance use, including relocation of one (1) existing crossover, paving of all cross overs, and upgrades to comply with current VDOT and AASHTO requirements ;
- Construction of warranted and approved noise barriers;
- Incorporation of a raised median between concrete barriers; and
- Shoulder strengthening of the entire width of existing shoulder for both westbound and eastbound I-64 between Fort Eustis Boulevard and the eastern project limits.

As part of the "Base Option", our Team intends to utilize the flexible pavement section for the proposed median widening of I-64. This option is not only more cost effective than the rigid pavement section, but will also require less maintenance, avoids significant temporary traffic operations to perform maintenance or replacement, and will eliminate concerns with reflective cracking or joint separation.

In addition to the geometric and capacity improvements above, safety improvements at the Route 105 (Fort Eustis Boulevard) Interchange will be implemented through clearing of vegetation to increase the sight distances at the entrance and exit ramps to and from I-64. Exact limits of clearing will be based on detailed final surveys, and will include field verification of specific trees and undergrowth which need to be removed or trimmed, and if grading adjustments need to be incorporated to provide adequate sight lines. The anticipated limits of this clearing are also depicted in our Volume II Design Concept document.

Maximum Grades

The maximum grade anticipated for I-64 is less than 3% and is consistent with the existing roadway. Development of the proposed pavement elevations will be based on widening of the existing roadway, with minor adjustments incorporated based on final surveys to eliminate any depressions or inconsistencies in the existing travel lane pavement. At the approaches to the proposed bridges over Industrial Park Drive and CSX, adjustments to the profiles of I-64 will be made to maintain a 70mph design speed while accounting for the increased structural depth required for the increased span length. Based on preliminary structural analysis, it is anticipated that a build-up of the existing travel lanes of up to 12" will be required to accommodate the increased structure depth and maintain the required vertical clearance over the CSX railroad track.

Project Options

As outlined in the RFP documents, our Team has considered and is prepared to incorporate the two Options identified in the RFP documents. These Options are depicted in our Volume II Design Concept documents, and are generally described below:

Option 1

Our Team will incorporate the required 2" asphalt overlay of the existing travel lanes and right shoulder as outlined in the RFP documents. Since our Team intends to utilize the flexible pavement section for the proposed median widening, the widened pavement sections will be adjusted to be consistent with those outlined in Section 2.6.1. Detailed pavement surveys completed by our Team at the outset of the Project will be utilized to identify existing right shoulder cross slopes to determine whether the 2" overlay can be "tapered" over the width of the right shoulder while avoiding excessive shoulder cross slopes. In areas adjacent to guardrail where the 2" overlay cannot be "tapered", then full replacement of the existing guardrail will also be completed to ensure proper installation height in accordance with current VDOT standards.

Option 2

Our Team will complete the extension of the Fort Eustis Boulevard Interchange ramps to provide improved safety and operation of the existing interchange ramps. As outlined in the RFP documents, the interchange ramp acceleration and deceleration lengths on I-64 will be increased by the following amounts:

- NB Fort Eustis to EB I-64: Increased by 1,340' to a total length of 2,000'
- SB Fort Eustis to WB I-64: Increased by 450' to a total length of 1,500'
- EB I-64 to SB Fort Eustis: Increased by 320' to a total length of 600'
- WB I-64 to NB Fort Eustis: Increased by 280' to a total length of 600'

In addition to the increased acceleration and deceleration lengths above, the tapers at the terminals of these lanes will be increased to provide a minimum 600' taper for both acceleration lanes and a minimum 250' taper for both deceleration lanes. Consistent with the median widening, our Team will utilize the flexible pavement section if Option 2 is incorporated into the Contract. Stormwater management, roadway drainage, hydraulic analysis, and grading limits will all be developed to account for these auxiliary lane improvements if this Option is selected, and final design will be completed so that the existing cloverleaf interchange ramps are not impacted, thereby eliminating the need for completion of an IMR, as noted in the RFP documents.

4.3 **Design Concept**

Roadway Drainage

Drainage improvements for the Project will consist of a combination of median inlets, closed storm sewer systems, new culvert installations, and open channel ditches. We will complete designs for each of these systems in accordance with the VDOT Drainage Manual specific to the type of facility being designed. Drainage layouts will minimize disruption to traffic during installation by utilizing existing cross pipes where possible, and drainage of both existing and proposed roadways will be accounted for throughout construction. As required by the RFP documents, pipes which have not been inspected, or which could not be inspected due to blockages or ponding of water, have been assumed to be unserviceable and will be plugged and abandoned or replaced. Provided below is a brief description of the key project drainage elements:

Closed System Drainage: Closed storm sewer systems will be required in the median where concrete barriers are installed based on minimal separation between the eastbound and westbound travel lanes (less than 40'). These closed systems consist of combination grate and slot inlets connected by a trunk line installed below the proposed median shoulder. Based on our analysis of existing roadway grades and anticipated flow patterns, we intend to place the trunk line along the eastbound shoulder. This will allow for the use of shorter median drop inlets (since the eastbound lanes are generally lower than the westbound lanes), avoiding excessive excavations adjacent to active travel lanes. Placing the trunk line adjacent to one of the shoulders will also allow for improved maintenance access to the storm sewer systems and a reduction in the number of drainage structures, since installation of a trunk line in the center of the median would require manholes to connect the barrier drop inlets, and manhole depths would need to be increased to account for the raised median areas.

Major Cross Culverts: As shown in design concept, several new cross culverts will be required to maintain existing and proposed drainage patterns across I-64. As required by the RFP, existing cross culverts which have not been inspected have been assumed to be unserviceable. However, at the outset of design and as part of our field survey efforts, inspections of existing pipes will be completed to verify their conditions. These surveys and video inspection reports will be provided to VDOT to determine if certain culverts or storm sewer systems can be utilized as part of the final drainage systems. Reuse of existing culverts and storm sewers will be considered in an effort to reduce impacts to the traveling public as a result of installation of new cross-culverts. Where new crossings are required to provide adequate drainage capacity, or to replace existing unserviceable facilities, we will consider both open cut and jack and bore installation. Jack and bore installations will be limited to those areas where adequate cover above the new culvert is available to prevent damage to the existing roadway. Where adequate cover is not feasible – due either to the diameter of the pipe or required inlet and outlet elevations – open cut installations will be utilized. In these areas, installation will be completed in phases in coordination with the roadway widening so that all travel lanes can be maintained per RFP requirements. In addition to pipe culvert crossings, extension of the existing triple box culvert near westbound I-64 Sta. 2742+50 will be required. Construction of the culverts will take place completely in the existing median behind temporary barrier protection, eliminating the need for temporary lane closures and impacts to motorists.

Open Channels and Roadside Ditches: Where the proposed median is greater than 40', our concept will maintain drainage by regrading the existing median ditch, adjusting existing median drop inlets, and adding inlets to existing cross culverts to convey flow towards stormwater management facilities or

other adequate outfall locations. Consistent with the closed system discussion above, the reuse of inlets and installation of new inlets on existing culverts will be based on the completion of surveys and video inspection of all existing drainage facilities.

Substandard Drainage Locations: Part 2, Section 2.7.3 of the RFP identifies three locations that have existing substandard drainage or adequate outfall problems. As required by the RFP, our Team will complete additional surveys at the outset of the Project to identify existing drainage patterns, sizes and inverts, and conditions of the adjacent facilities. The results of these investigations will help to determine the level of modifications necessary along the I-64 corridor to avoid further impacts to these already substandard outfalls. Based on our analysis and investigation of the area to date, our Team believes that adequacy of outfalls at these locations can be addressed by the following methods:

- ***East of Denbigh Boulevard:*** To avoid discharge of additional flows to the existing systems below and beyond the CSX railroad culvert, our Team will design and construct BMP facilities adjacent to I-64 which will detain the proposed flows to a rate which is accommodated by the existing CSX culvert. Reducing the discharges towards the existing facilities will ensure that improvements to drainage systems underneath the CSX railroad and acquisition of additional off-site easements are avoided, both of which would be costly, introduce impacts well beyond the current limits of the Project, and may not be feasible based on cover requirements for new drainage facilities installed below railroad tracks. Our identification of this strategy comes from the successful implementation of the exact same type of improvements on the I-66/Route 29 Interchange in Gainesville, Virginia adjacent to Norfolk Southern Railroad. In that location, we designed several detention facilities to avoid jacking pipes below the railroad to address existing culvert capacity concerns, and we expect this method will be equally as successful in this location.
- ***Jones Run Creek:*** Work associated with the median widening in this area will not impact the grading or flow conditions at the inlet end of the existing culverts. The final noise analysis completed by our Team will identify the required limits of potential noise barrier 47/48 in this location, and the alignment will be selected to avoid impacting the inlet end of the box, as well as grading of the existing slopes. Inspection of the existing culverts will be completed to determine their serviceability, and calculations will be completed to ensure the adequacy of the outfall is not compromised by the proposed I-64 median improvements. Consideration will be given as to whether additional modifications to the existing I-64 culvert or culvert beneath the gravel access road immediately west of I-64 can be incorporated to improve the current capacity and flooding concerns.
- ***Woodside Drive Subdivision:*** In this area, flooding problems are caused by the subdivision's closed storm sewer system that connects directly to the closed system within VDOT right-of-way. We believe these flooding concerns can at least be partially addressed through removal of a portion of the closed drainage system within VDOT right-of-way and adjacent to I-64. This would allow ponded water to "escape" the system and be stored in roadside ditches and BMP facilities which our Team will construct to address both stormwater quantity and quality requirements. Additionally, our Team has planned for the installation of noise barrier 47/48 in this same location, and the alignment of the noise barrier will be developed to ensure the opening in the storm sewer system, as described above, is on the I-64 "side" of the noise barrier (not on the "residential" side). This will help to ensure that ponding of water will remain within VDOT right-of-way, and also ensure that the noise barrier does not restrict flow from the residential properties.

Stormwater Management

In accordance with RFP requirements, stormwater management improvements will be designed in accordance with the new Virginia Stormwater Management (SWM) II-B criteria; 9VAC25-870-65. To meet project stormwater management requirements, our Team will utilize "treatment trains" to take advantage of the runoff reduction elements which will decrease the treatment requirements at each outfall. Our Team has effectively used this approach to comply with II-B criteria on multiple projects while minimizing right-of-way impacts to adjacent properties. Additionally, our Team will utilize clearinghouse BMPs such as constructed wetland, bio-retention, wet swales, open space, sand filters and underground treatment facilities. Based on our analysis of the proposed improvements and existing site conditions, we estimate that the Project phosphorous treatment requirements will be approximately 56 lb/yr. To account for this required treatment, our Team has identified 8 wet swales located in the median, 4 constructed wetlands, 4 bio-retention facilities, and 2 grass channels. In addition to meeting the required phosphorous treatment for the Project, the locations of proposed facilities have been selected to help address flooding and adequate outfall concerns identified for three specific areas above, to address Energy Balance requirements, which requires project runoff to be reduced to pre-construction outfall volumes, and to minimize right-of-way impacts which were identified in the RFP documents. Based on our conceptual stormwater management layout, we have been able to reduce the right-of-way acquisition needs of the Project by more than 70%.

We have been able to reduce the right-of-way acquisition needs of the Project by more than 70%.

In an effort to further reduce the right-of-way impacts and number of stormwater management facilities required for the Project, our Team has also investigated the purchase of nutrient credits. As allowed by the II-B criteria, up to 25% of the phosphorous treatment, or 14 lbs/yr, can be purchased from a mitigation bank. According to records, there is 37.14 lb/yr of SWM nutrient credits available from the Pamunkey Farm Bank managed by Falling Springs, LLC. Purchase of 14 lbs/yr of credits from this bank allows us to eliminate 2 constructed wetlands and 2 bio-retention facilities from the Project. During design of the improvements, we will work with VDOT to confirm if purchase of these nutrient credits is a feasible and a desired solution for the Project, taking into consideration other projects in the area which may also be attempting to purchase nutrient credits from the same bank. If nutrient credits are an acceptable approach, we can also work with VDOT and DEQ to determine if more than 25% of the Project phosphorous treatment can be accounted for through nutrient credit purchase, potentially allowing for even further reductions in the number of stormwater management facilities which need to be constructed.

Purchase of 14 lbs/yr of credits from this bank allows us to eliminate 2 constructed wetlands and 2 bio-retention facilities from the Project.

Also, as noted in Part 2, Section 2.7.3 in the RFP, there are several drainage channels which convey water from Skiffes Creek Reservoir to the Lee Hall Reservoir. In addition to the stormwater management considerations identified above, our Team has also located the necessary stormwater management facilities in a manner to sufficiently detain stormwater runoff so that the existing channel will not be further eroded, avoiding future impacts to the Newport News Waterworks property.

Hydraulic Design and Analysis (H&HA)

Our Team will complete the necessary H&HA analysis, both during design and for as-built documentation following construction, for the improvements and widening of the I-64 bridges over the Lee Hall Reservoir. Our Design Team brings over 30 years of experience with Federal Emergency Management

Agency (FEMA) and VDOT for H&HA documentation, including experience managing the Region 3 FEMA contract covering Virginia, Maryland, and the District of Columbia. Analysis and documentation will consider both H&HA capacity and conveyance requirements, as well as scour considerations for the Lee Hall Reservoir structures.

Proposed Right-of-Way Limits

Our Team's proposed right-of-way limits are shown in our Volume II Design Concept document along with the VDOT proposed right-of-way limits identified in the RFP documents. Areas of anticipated right-of-way reductions have been shaded to clarify the amount of reductions our Team anticipates will be possible pending development of final design details and grading. Our Team's unique solution to the stormwater management requirements has allowed us to reduce the right-of-way impacts by approximately 70% as compared to the RFP concept and will allow us to reduce the number of impacted properties from 21 to 12 based on our conceptual design. ***The most significant reduction in needed right-of-way for the Project involves the 5 parcels owned by the City of Newport News. Our proposed design reduces the required right-of-way needed from over 19 acres in the RFP concept to 5 acres.*** Final design grading of the stormwater management facilities, as well as required utility relocations, will determine the final Project impacts. As specified in the RFP documents, our final right-of-way and permanent impacts will not exceed the RFP limits.

Proposed Utility Impacts

Anticipated utility impacts are shown in our Volume II Design Concept plans, and are more specifically detailed in Section 4.4.2. As noted in that section, several conflicts are anticipated as a result of noise barrier installations, however some of these may be avoided through adjustments to the noise barrier alignments, which will be coordinated with Skelly & Loy as they develop the draft and final Noise Abatement Design Report (NADR). Since most of the anticipated utility conflicts are on the outside of I-64, the majority of the construction elements can be completed concurrently with utility relocations, avoiding schedule delays which can occur due to relocation of facilities by individual utility companies.

Noise Wall Locations

As noted in the RFP documents, 4 noise barriers were considered to be feasible and reasonable based on the noise mitigation provided. However, one of the barriers – Barrier 45 – was not requested or desired by the benefited property owner. Accordingly, our Team has accounted for design and construction of the 3 remaining noise barriers. The noise barriers currently anticipated include:

- Barrier 46 – Approximately 4,100' in length with an average height of 16'
- Barrier 47 & 48 combined – Approximately 7,115' in length with an average height of 12'

Based on our design concept, we do not anticipate that existing barriers M and A between Denbigh Boulevard and Bland Boulevard will be impacted by the proposed design. During preliminary design, noise barrier locations will be adjusted based on final grading and in an effort to make them as efficient and effective as possible. Noise walls will be designed to avoid existing drainage channels, existing underground and overhead utilities, and proposed culvert extensions. These adjustments will be accounted for in the final noise analysis. Once preferred and recommended noise barrier locations are identified, a draft NADR will be completed and submitted to VDOT for review, and any modifications will be incorporated into the

Final NADR which will be submitted for approval. Following approval of the final NADR, noise barrier plan and profile sheets will be incorporated into the construction plans for development of shop drawings and detailed drawings.

"Other" Key Project Elements

In addition to the major design and construction elements described above, there are several other key project features which must be integrated into the Final Design. These include:

Intelligent Transportation Systems (ITS): Our Team has significant experience in the design and installation of ITS elements along freeways, and is well versed in the VDOT requirements having completed recent projects on I-66 and I-95 with the same components and challenges included in this Project's scope. Placement of ITS devices, such as cabinets, Travel Time Signs, and Dynamic Message Sign (DMS) sign supports will be located to ensure easy maintenance access to each device. Pull-off areas, openings in guardrail, or widened shoulders will be incorporated to provide safe areas for maintenance, inspection, and access by VDOT staff.

Project example of static sign with dynamic elements designed by the Shirley Team along I-95 for the Intercounty Connector Design-Build Project.

Existing "Reach the Beach" sign to be relocated

We are well aware of the need to provide both VDOT Eastern Region Traffic Operations Center (ERTOC) staff and the traveling public with reliable data both during and after construction, and therefore will take a proactive approach to ensuring critical ITS infrastructure remains operational throughout construction. This will begin with establishing lines of communication with VDOT immediately upon notice-to-proceed, and will continue with regular coordination throughout the design and construction process to avoid any issues or challenges during or at the completion of the Project.

Modifications to Limited Access Lines: Our Team has experience with preparation and submission of documentation required to gain approval from VDOT and for Commonwealth Transportation Board (CTB) action to adjust limited access (L/A) lines. As shown in the RFP documents, stormwater management facilities will require adjustments in the L/A line which we recognize will require CTB approval. Based on our Team's unique concept, the limits of changes to the L/A line have been reduced.

Guardrail/Median Barrier: Our Team's design minimizes the amount of guardrail by utilizing Standard MB-3 median guardrail where feasible in lieu of two separate runs of Standard GR-2 guardrail. Proposed barrier will be limited where the proposed median is less than or equal to 40' wide and the bifurcation between the westbound and eastbound edges of pavement is greater than six inches.

4.3.2 Conceptual Structural Plans

The Team's Conceptual Structural Plans are included in our Volume II Design Concept document. Descriptions of these Conceptual Plans and details regarding enhancements made to the RFP Plans that exceed project requirements are as follows:

Bridge Structure:

B-616 & B-617: I-64 over Industrial Park Drive and CSX Railroad

Our concept for these bridges differs from and is a significant improvement to the RFP Conceptual Plans in that we are proposing to completely replace the existing 4-span, steel girder bridges with new 2-span prestressed concrete bulb-tee girder bridges. Existing piers within CSX right-of-way have been eliminated by our Team's concept. The new bridges will be jointless utilizing full-integral abutments behind mechanically stabilized earth (MSE) walls. This is a significant improvement from the RFP concept in that the existing bridges have significant deterioration and repair requirements that would only extend the useful life of the bridges for a limited time. With our Team's proposed replacement of the bridges, VDOT will receive new bridges with greatly reduced maintenance requirements, meeting all present design standards and criteria with the normal 75-100 year life cycle of newly constructed bridges. Vertical clearances over Industrial Park Drive will be a minimum of 16'-6" and over the CSX Railroad, it will be a minimum of 23'-0". Design and construction of the replacement bridges will be coordinated with CSX per the RFP requirements.

As previously noted, our concept lengthens the bridge span over CSX so that the eastern abutment and pier are both located outside of CSX Railroad right-of-way. In order to account for the increased span length, the profiles of the adjacent I-64 roadways will be adjusted to maintain the required minimum vertical clearance and increased structure depth.

Typical Section: Our concept for the bridges provides the three travel lanes and full width shoulders shown in the RFP Conceptual Plans. The inside shoulders of the finished bridge will be approximately 17' wide in order to maintain adequate travel lane and buffer widths during phased construction of the bridges.

Superstructure: The proposed bridges consist of 2 spans (62'-0" & 107'-0") supported by a multi-column pier and full-integral abutments behind mechanically stabilized earth (MSE) walls. The girders will consist of prestressed concrete bulb tee girders supporting a cast-in-place concrete deck slab. Concrete will be low permeability in accordance with the requirements of the RFP. Reinforcing steel in the deck slab will be corrosion resistant reinforcing (CRR) in accordance with VDOT Structure and Bridge IIM –S&B-81.5.

Substructure: The substructure for the new bridges will consist of a multi-column pier supported on a deep foundation and full-integral abutments located behind MSE walls. The design and detailing of the new substructure will meet all VDOT and CSX clearance requirements.

Material Selection, Maintenance & Construction Considerations: With the new bridges proposed by our Team, we will be providing VDOT with virtually maintenance free bridges. By utilizing jointless bridge criteria and concrete girders, low permeability concrete, and CRR reinforcing steel our concept eliminates all of the elements of bridge construction that would otherwise contribute to long-term maintenance concerns.

4.3 **Design Concept**

In accordance with the RFP requirements, these new bridges will be designed using AASHTO LRFD Bridge Design Specifications, 6th Edition and VDOT Modifications.

Since the existing bridges are Type B structures, we will utilize all required precautions necessary to protect the environment and the traveling public when the existing steel beams are removed. Maintenance of traffic during the construction of the bridges will be coordinated with the Transportation Management Plan (TMP), and two lanes of traffic will be maintained in each direction at all times. Before placing traffic in either temporary or final configurations, load ratings will be completed and submitted for approval by VDOT.

B-618 & B-619: I-64 over Route 105 (Fort Eustis Boulevard)

Our concept for these bridges is to widen, modify and repair the existing bridges in accordance with the RFP and the RFP Concept Plans. Our concept will meet the requirements to maintain the existing 16-foot minimum vertical clearance over Fort Eustis Boulevard for both the existing portion of the bridges as well as the new, widened portion.

Typical Section: Our concept for these bridges is to repair the existing deck slab as described in Section 2.3.2 of Part 2 of the RFP and to widen the bridges to provide the four travel/auxiliary lanes and full width shoulders as shown in the RFP Conceptual Plans.

Superstructure: The proposed bridges will match the existing bridges which consist of 3 spans (46'-0", 80'-0" & 46'-0") supported by multi-column piers and cast in place abutments. The bridges will be widened utilizing either steel rolled beams or plate girders. The size and spacing of the new beams will meet the RFP requirement that the stiffness of the new beams/superstructure will be no less than the stiffness of the existing beams/superstructure. Also per the RFP requirements, the existing inside (median side) fascia girder of each bridge will be replaced or rehabilitated as part of the widening. Bearings for the existing beams will be replaced as required by the RFP, utilizing steel-reinforced elastomeric pads. The existing beams that are to remain will have their existing coatings completely removed and reapplied in accordance with VDOT requirements. All Category E and E' fatigue prone details will also be retrofitted using Ultrasonic Impact Treatment in accordance with the RFP and the Special Provision. The existing bridge deck that is to remain will be repaired in accordance with the RFP requirements by patching identified areas, removing the existing latex concrete overlay and the top inch of the deck slab and overlaying the entire portion of the existing deck that will be retained. Additionally, the joints at the piers will be eliminated by utilizing the detail shown in the Structure and Bridge Manual, Volume V, Part 2, File No. 10.02-2 and the joints at the abutments will be eliminated by extending the deck slab over the abutment backwalls.

Substructure: The substructure for the widened portion of the bridges will match the existing bridges. The piers will consist of pile supported multi-column piers and, in accordance with the RFP requirements, a minimum of two columns will be utilized for the new pier constructed to support the widened portion of the bridges. The abutments for the widening will match the existing abutments and will consist of cast in place concrete perched abutments supported on pile foundations. In accordance with the RFP requirements, the existing abutments, piers and slope protection in front of the abutments will be repaired/rehabilitated based on the items and quantities shown in the RFP.

Material Selection, Maintenance & Construction Considerations: Our Team proposes to provide all rehabilitation/repairs to the existing bridges as required by the RFP Concept Plans and required by the RFP, the resulting bridges, once the superstructure and substructure repairs are completed and the deck joints are eliminated, the maintenance requirements of these bridges moving forward are expected to be minimal.

All new construction will utilize Corrosion Resistant Reinforcing Steel (CRR) as required by and in accordance with VDOT Structure and Bridge IIM –S&B-81.5. We will utilize low permeability concrete for all newly constructed elements of the bridges.

In accordance with the RFP requirements, all widened portions of the bridges will be designed using AASHTO LRFD Bridge Design Specifications, 6th Edition and VDOT Modifications. With the existing bridges classified as Type B structures, we will employ all required precautions necessary to protect the environment and the traveling public when painting/modifying the existing beams. Maintenance of traffic during the repair of the existing bridges and the construction of the widenings will be coordinated with the TMP, and two lanes of traffic will be maintained during all phases of bridge construction. Load ratings will be completed and submitted for approval by VDOT before implementation of either temporary or final traffic configurations..

B-620 & B-621: I-64 over Lee Hall Reservoir

Our concept for these bridges is to widen, modify and repair the existing bridges in accordance with the RFP and the RFP Concept Plans.

Typical Section: Our concept for these bridges is to repair the existing deck slab as described in section 2.3.3 of Part 2 of the RFP and to widen the bridges to provide the 3 travel lanes and full width of shoulders as shown in the RFP Conceptual Plans. Our Team will maintain the minimum 15’ clear channel as stated in the RFP except for short duration closures for boater safety, such as erecting beams above the channel. Any short duration closures will be coordinated with the City of Newport News.

Superstructure: The proposed bridges will match the existing bridges which consist of two (2) 48’-1” spans supported by a center pier and cast in place abutments. We will widen the bridges utilizing he same precast AASHTO girder section to match the existing bridge. The size and spacing of the new beams will meet the RFP requirement that the stiffness of the new beams\superstructure will be no less than the stiffness of the existing beams/superstructure. Also per the RFP requirements, we will replace or rehabilitate the existing inside (median side) fascia girder of each bridge and bearings for the existing beams utilizing steel-reinforced elastomeric pads. The existing bridge deck that is to remain will be repaired by patching areas identified in the RFP, removing the existing epoxy overlay and the top inch of the deck slab and overlaying the entire portion of the existing deck that will be retained. Additionally, we will eliminate both the joints at the piers by utilizing the detail shown in the Structure and Bridge Manual, Volume V, Part 2, File No. 10.02-2 and the joints at the abutments by extending the deck slab over the abutment backwalls.

Substructure: The substructure for the widened portion of the bridges will match the existing bridges. The piers will consist of pile-bents (prestressed concrete piles with a cast-in-place concrete cap) and, in accordance with the RFP requirements, we will use a minimum of two piles/columns for the new pier constructed to support the widened portion of the bridges. The abutments for the widening will match

the existing abutments and will consist of cast in place concrete perched abutments supported on pile foundations. In accordance with the RFP requirements, the existing abutments, piers and slope protection in front of the abutments will be repaired\rehabilitated based on the items and quantities shown in the RFP.

Maintenance & Construction Considerations: Our Team proposes to provide all rehabilitation/repairs to the existing bridges as required by the RFP documents. Once the superstructure and substructure repairs are completed and the deck joints are eliminated, the maintenance requirements of these bridges are expected to be minimal. All new construction will utilize Corrosion Resistant Reinforcing Steel (CRR) in accordance with VDOT Structure and Bridge IIM –S&B-81.5, and low permeability concrete will be used for all newly constructed concrete elements of the bridges. In accordance with the RFP requirements, all widened portions of the bridges will be designed using AASHTO LRFD Bridge Design Specifications, 6th Edition and VDOT Modifications.

Maintenance of Traffic during the repair of the existing bridges and the construction of the widenings will be coordinated with the TMP, and two lanes of traffic will be maintained in each direction during construction. Load ratings will be completed and submittal for approval by VDOT prior to the bridges being placed into operation for either a temporary traffic configuration or for the final configuration.

Retaining Walls

With the enhancements our Team has made to the stormwater management concept, we are able to eliminate the retaining wall shown in the RFP plans east of Denbigh Boulevard adjacent to the CSX railroad right-of-way. The elimination of this wall not only simplifies construction in this relatively tight footprint, but also eliminates long-term maintenance and inspection needs for VDOT.

We are able to eliminate the retaining wall east of Denbigh Boulevard.

Long Term Asset Performance and Durability

In summary, VDOT can have confidence in the long-term asset performance and durability of our Team's design for several reasons:

- Complete replacement of the I-64 Bridges over Industrial Park Drive and CSX will provide a 75-100 year design-life as opposed to only a minor increase in service life associated with the repairs identified in the RFP documents;
- By completely spanning the CSX right-of-way, future maintenance and inspection processes have been simplified, as has access to complete the inspections;
- The modifications to the stormwater management concept have significantly reduced the amount of right-of-way impacts required for the Project, and long-term maintenance and inspection requirements have been reduced by the elimination of several large stormwater management facilities;
- Shoulder strengthening from Fort Eustis Boulevard to the eastern limits of the Project will increase the useable life of the I-64 mainline shoulders; and
- Rehabilitation of the Fort Eustis and Lee Hall Reservoir bridges will provide enhanced service life and reduce future maintenance.

4.4 - Project Approach

4.4 Project Approach

4.4.1 Environmental Management

Our Team's approach to environmental management begins during the procurement phase of the Project, and continues with the same environmental staff throughout design and construction. This process ensures that all of the knowledge and information gained is consistently and completely communicated and coordinated for the entire duration of the Project. Our Team has used this approach on each of our design-build projects, and it has enabled us to complete every Project without any delays due to acquisition of environmental permits.

During Design

Prior to the development of design plans and detailed engineering, our Team works together to identify permits which are anticipated to be needed for the Project. The list of potential permits is developed based on review of the contract documents, environmental database searches, and based on field visits to the Project site. For this Project, we have already identified several permits which we anticipate are necessary, and the appropriate schedules to obtain those permits is reflected in our Proposal Schedule. The starting dates for each anticipated permit is also tied to the appropriate timeline in the development of the design plans, ensuring that enough detail for grading, drainage, temporary construction access, and utility relocations are available to ensure limits of permits are adequate for completion of the Project. Critical areas, sensitive properties, protected species, and permits anticipated for this Project include:

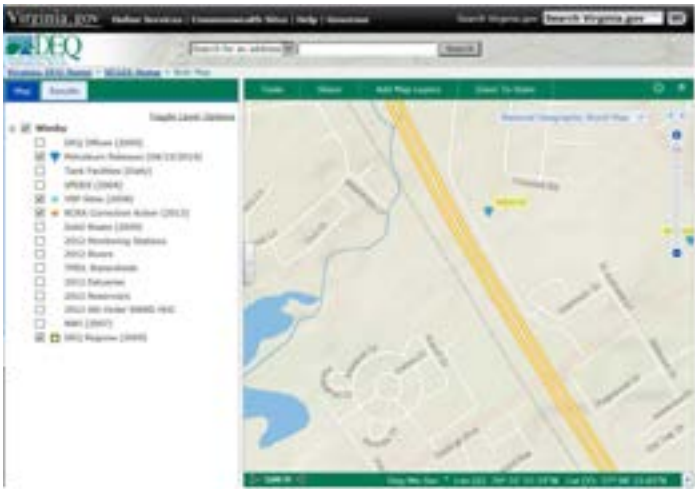

Virginia DEQ Website

- City of Newport News properties;
- Lee Hall Reservoir;
- Mabee's Salamander habitats in wetland areas;
- Small Whorled Pogonia habitat in the southwest quadrant of the Ft. Eustis Interchange;
- The Project lies within a Fire Ant Quarantine area, which may require special disposal of soil and soil bearing material (stumps for example);
- One location of a petroleum release near Richneck Road, 0.5 miles north of Denbigh Boulevard and approximately 400' from the Project corridor;
- Wetland and Waters of the U.S. Impacts, including the Skiffes Creek Reservoir outfall channels; Based on the amounts of anticipated impacts, we expect the Project will require a DEQ Virginia Water Protection General Permit #3, a U. S. Army Corps of Engineers SPGP, and a VMRC subaqueous bed permit. These permits typically require a 4-6 month process period;
- Department of Labor and Industry permits for removal of Asbestos Containing Material (ACM); and
- This Project is located within an Ozone non-attainment area and restrictions may apply to the use of Volatile Organic Compounds.

4.4 **Project Approach**

Immediately upon notice to proceed, more detailed studies and surveys will be completed to determine if these permits are appropriate and required or if other permits are needed. For example, once property access is available after the required 15 day notification period, delineations are completed of all wetland and water areas. Surveys are then completed to identify the exact locations of these delineations, and that information will be available when design-level mapping and surveys have also been completed.

During preliminary design, our environmental staff will develop a list of environmental commitments based on the NEPA document, special provisions, and other project documentation which will then be used to develop an environmental constraints map for specific areas where impact minimization is necessary or where impacts are to be avoided. This list and map will be shared with the entire Team, including design, utility, and construction staff. The Team will use this information during design, while construction access and temporary work areas are identified, and during coordination with utility companies for relocation requirements. Having this information at the outset of preliminary design activities ensures that avoidance and minimization efforts can be investigated early in the design process, as opposed to after more significant design details have been developed.

Our Team has already implemented changes to the RFP plans in an effort to reduce environmental impacts.

Avoidance of critical and/or sensitive areas of the Project will continue during detailed design of the Project improvements, but our Team has already implemented changes to the RFP plans in an effort to reduce environmental impacts. For example, the reduction in the number of stormwater management basins, and the locations of stormwater management sites which will be used by our Team, were selected in a way which reduces right-of-way impacts and avoids sensitive drainage channels, wetlands, and species habitats. During final design, the following additional considerations will be made to further reduce impacts to sensitive project areas:

- ***Noise Barriers:*** During development of the draft and final Noise Abatement Design Report, consideration will be given to adjusting the locations of noise barriers in an effort to reduce clearing, avoid temporary crossings of streams and channels for installation of the barriers, and avoid permanent crossings of open channel areas.
- ***Avoidance of Excavation:*** As noted, there is a potential to encounter contaminated soils from old petroleum releases. In these areas, efforts will be undertaken to avoid the need to relocate ditches or install deep storm sewer systems, either of which could require excavation and special disposal of contaminated materials.
- ***Right-of-Way Reductions:*** As noted, our Team has already significantly reduced the right-of-way impacts to the Project. During final design and final grading of the stormwater management facilities, we will look to further reduce the right-of-way impacts, both in an effort to reduce project costs associated with right-of-way acquisitions, but also in an effort to avoid environmental impacts, including the need to complete Phase I Environmental Site Assessments (ESA), which are required for all right-of-way acquisitions.

In addition to development of final construction plans, care will be taken during development of the temporary erosion and sediment (E&S) control plans. Our Team recognizes that this Project passes through some very sensitive areas, including the Lee Hall Reservoir watershed which provides clean drinking water to a large population. Phased E&S plans will be developed for the Project which will account

for temporary construction activities and phased installation of drainage and stormwater management improvements. Redundant controls will be identified and specified in critical areas to ensure impacts are avoided throughout construction.

Once design has progressed to a level where the project footprint (including utility relocations) is known, the required project permits will be obtained. Our environmental staff will prepare the necessary permit plates, exhibits, and documentation for submission to the permitting agencies. The VSMP permit will be obtained following submission of the required LD-445 forms, and Phase I ESA documentation will be submitted in advance of the request for right-of-way plan approval. Copies of all environmental permit submission documentation will be provided to VDOT to ensure everyone is aware of the status of all environmental permit applications, and copies of the approved permits will also be provided once they are obtained.

Once all permits are obtained, specific project requirements including the use of special channel linings or time of year restrictions will be coordinated with the construction team and noted in the final construction plans. Coordination of the final construction plans and approved environmental commitments will ensure that permit obligations are clearly identified to all construction staff to avoid concerns during construction.

During Construction

Once plans are approved and released for construction, our environmental staff will shift to the permit monitoring phase of their activities. Before any work is initiated in the field, the same environmental staff who initially delineated the wetlands will return to the site to re-mark the limits of jurisdictional wetlands and streams which are not to be impacted during construction. Critical areas will then be marked with safety fence or silt fence by construction staff to ensure unpermitted impacts are avoided and sensitive areas are not accessible. Proper erosion and sediment controls will also be installed in accordance with the approved plans, and additional elements will be considered based on further coordination between construction, utility relocation, and environmental staff.

Wetland Protection

Monitoring and inspection throughout the duration of the construction phase of the Project will also ensure compliance with project permits and current VDOT requirements. Dedicated erosion and sediment control staff will inspect the site on a regular basis, paying close attention to the effectiveness of installed E&S devices. Specific field walks will be conducted after each “major” event as defined by current VDOT requirements, and any damaged or deteriorated measures will be repaired or reinstalled prior to additional work being initiated within the drainage area of the E&S device.

In addition to construction staff making regular inspections of the E&S devices, the environmental staff who prepared the permit drawings and documents will make regular visits to the site – at least on a quarterly basis as required by the permit documents – to ensure areas of avoidance are still inaccessible to construction staff and ensure the site is either temporarily or permanently stabilized as required by the permit documents. Channel linings will be checked to ensure the appropriate materials have been used within jurisdictional channel areas, and corrections, if any, will be identified to the construction staff.

Our Team recognizes that access for small fishing boats and canoes will need to be maintained for the Lee Hall Reservoir and we will work with DEQ, the City of Newport News, and VDOT during construction to identify times when temporary restrictions can be implemented to allow for erection of the new bridge girders.

At the completion of construction, environmental staff will make a final site visit to document the final site conditions so that permits can be closed. Any corrective measures will be identified, such as additional seeding or stabilization, before a request for closure of the permits is made. The process outlined above has been used successfully on each of our Team's projects, and to date not a single project has been temporarily stopped for environmental permitting reasons. The constant coordination and communication between Team members will ensure our track record continues on this Project.

4.4.2 Utilities

One of the most critical elements of a complex design-build project such as this Project is the effective and efficient integration of the utility process into each and every project discipline. Knowing how much of an impact utilities can have, our Team has expended considerable effort to date in preparation of this Technical Proposal. We carefully studied the RFP Conceptual Plans, reviewed the utilities in the field, discussed the Project with each utility company, researched available records, and ultimately developed our Conceptual Plan and Schedule accordingly. This information has had a direct impact on our Team's concept, proposed phasing and sequence of work, thus reducing the risk to VDOT and the public of the Project not completing successfully.

These integrated Team efforts will continue in earnest as the Project moves into detailed and final design. At the outset of design, utilities will be designated, test-pitted, and reviewed for potential conflicts. Our Utility Team is fully engaged in the design process and coordinates further with the right-of-way, permitting, construction, and scheduling disciplines. During construction, our Utility Team remains fully engaged to coordinate relocations between the utility companies and the Construction Team, therefore ensuring their timely and successful completion.

The Shirley Team has been successfully managing the utility discipline on multiple design-build projects for VDOT and other owners for over 12 years. The key to our success is having the experienced in-house resources and positive relationships with utility owners, and as discussed above, integrating them with all other disciplines. With this experience, we have learned first-hand the importance of avoiding utility conflicts and relocations altogether. This will be our first and highest priority throughout the design and construction phases of the Project. If conflicts cannot be avoided by design, then we will work diligently to minimize these relocations through a combination of design and/or protection measures that allow the utilities to remain in place. Only as a last resort will we relocate utilities to eliminate conflicts with new construction.

Specific Utility Impacts

Since the majority of the Project is to the median side of the Limited Access highway, there are relatively few impacts to the proposed pavement and bridge widenings from conflicts due to existing utilities. Conversely, improvements on the outside of the corridor present a slightly larger potential for utility conflict. At this stage of design, we have identified those existing underground and overhead utilities that potentially conflict with the design and construction of the Project.

Listed below in Table 4.4.1 is a summary of the Known Utilities and Potential Conflicts as determined by the Shirley Team:

Table 4.4.1 - Known Utilities and Potential Conflicts

Utility/ Owner Description	Approximate Location	Known/Potential Conflict	Relocation Plan/ Avoidance Strategy
OVERHEAD POWER/COMMUNICATION LINES			
Dominion Power Overhead Transmission Lines	Station 1654+00 adjacent to Abutment A of Bridges B-616 and B-617	Impact Bridge Activities such as Pile Driving and Steel Erection	Coordinate de-energizing lines with Dominion Power
Dominion Power Distribution Lines	Station 2742+00 adjacent to Richneck Road	Noise Wall Construction operations	Replace existing poles with taller poles or adjust Noise Wall alignment
Dominion Power Distribution Lines	Station 2757+50 to 2763+00 along Richneck Road	Noise Wall Construction operations	Replace existing poles with taller poles or adjust Noise Wall alignment
UNDERGROUND POWER/COMMUNICATION LINES			
Electric Power Feed to VDOT facilities	Station 1602+00 at Fort Eustis Bridges B-618 and B-619	Existing conduit hung from bridge girders	Relocate as necessary
Dominion Power	Station 2612+00 at Noise Wall	Noise Wall Construction operations	Adjust Noise wall alignment as necessary for avoidance
Electric Power Feed to VDOT sign and lighting facilities	Station 2758+00 to 2773+00	Existing conduit in median of I-64	Relocate as necessary
Verizon Virginia LLC	Industrial Park Drive under existing overpass	Buried ductbank	Design and construction adjusted to avoid impacts
WATER			
Newport News Water	Station 2765+00	Existing 16" Ductile Iron Pipe Crossing	Contractor will be required to extend / connect existing casing pipes around the waterline in the median
Newport News Water	WB I-64 Station 2689+00	Noise Wall Construction operations	Adjust Noise wall alignment as necessary for avoidance
SANITARY SEWER			
Newport News Sanitary Sewer	WB I-64 Station 2634+00	Existing 48" and 27" waterlines potential to impact Noise Wall Construction operations	Adjust Noise wall alignment as necessary for avoidance
GAS			
Colonial Pipeline along WB I-64	Station 2655+00	Noise Wall Construction operations	Adjust Noise wall alignment as necessary for avoidance

Mitigation Strategies

Utilities have the potential to significantly impact the Project schedule and cost. On design-build projects, this risk is even greater for several reasons. First, at this phase of the Project's development, the roadway plans are at a preliminary level of completion and utility test pits have not been performed. It is not feasible at this stage to determine the accurate location of the existing facilities or the full extent of the impact the design will have on them. Second, the majority of the utility companies have not begun their design and analysis of the cost and schedule for their potential relocations. Finally, there is limited leverage available to the design-builder to affect the utility companies to complete their work within the overall project schedule. ***It is precisely our Team's experience managing these risks that has led to the successful***

completion of every one of our design-build projects for VDOT. This experience has led to the following proven mitigation strategies and project-specific concepts that we will implement on the Project:

A. Alternate design concept to minimize direct utility conflicts.

As we have prepared our Technical Proposal, our Team has invested a significant amount of time and effort to determine where utilities are currently located, how they are affected by the design, the cost to relocate unavoidable conflicts, and the schedule for doing so. Two activities in particular are worth mentioning as utility strategies come into play. First is the existing overhead Dominion Power Transmission Lines (Dominion) that run perpendicular to the I-64 alignment at Station 1654+00 adjacent to Abutment A of Bridges B-616 and B-617 over Industrial Park Drive. These lines will present an overhead conflict with activities such as existing bridge beam removal during demolition as well as pile driving and steel erection for the new portions of the structure. Our Team has already contacted Dominion and determined that de-energizing these lines is allowed with proper notice and payment to Dominion. The Shirley Utility Manager will work closely during design and construction with Dominion to develop a schedule and plan that is not disruptive to them and is safest for bridge crews. The Team has also modified the SWM design east of Denbigh Boulevard to eliminate conflicts with existing poles.

Second, the proposed noise walls along the westbound side of the corridor improvements will require careful planning and utility investigations to avoid conflicts. During noise barrier design, our Team will perform preliminary field layout along with utility locating and designations. All field data will be utilized to develop a design that maximizes the opportunity for utility avoidance. Noise wall post locations and alignments will be modified to obtain the most efficient design possible.

B. Designating a full time Utility Manager with primary focus on managing the utility scope of the Project from concept to completion.

Our in-house Utility Manager has served in this role on every one of our design-build projects to date and is already intimately involved in this Project. He has the relationships in place, a fundamental working knowledge of the individual utility companies, an indication of the existing utilities present in the Project corridor, and a thorough understanding of the interaction between the utilities and all other project disciplines. Having an in-house Utility Manager is a key strength that our Team brings to the Project given the utility impacts we have identified. Not having to utilize an outside third party consultant or subcontractor for this function allows our Team to exercise more control of the utility relocation process, provides quicker response and flexibility to adapt to project challenges, and facilitates the overall integration and constructability review functions.

C. Completely integrating utilities with all other project disciplines including design, right-of-way, permitting, construction, and QA/QC.

The primary method of accomplishing this task is by holding, at a minimum, weekly Design Meetings with the entire Project Team. Led by the Design-Build Project Manager, these meetings are an extremely important tool in ensuring that all design-build disciplines have input into the design and each other's disciplines. Our Team will review all aspects of the design and keep meeting minutes in order to track progress and define responsibility. Issues and options for their resolution are discussed and agreed to by all Team members. This interactive process among the various disciplines occurs continuously outside of the scheduled Design Meetings. VDOT can be assured that when plans are submitted, they have been created with input and review by all Project disciplines, including utilities.

D. Creating a Project Schedule with input from the Utility Manager and other disciplines.

As shown in the Proposal Schedule submitted under Section 4.7, we have incorporated the known utility conflicts into the overall sequence of work. During the development of this Technical Proposal, our Utility Manager met with each individual utility company and discussed the Project scope and potential conflicts with them. Based on these discussions, our previous experience and the information provided by the utility companies at the Utility Scoping Meeting on July 2, 2014, we have anticipated the timeframes for relocations and coordinated with the other disciplines, such as right-of-way, permitting and construction to arrive at a proposed sequence of work. In addition to conformance to the schedule, it highlights the need to remain focused on the management and coordination of the utility work. Throughout the Project, utility progress will be updated on a regular basis by the Design-Build Project Manager and the Utility Manager in order to identify schedule impacts as early as possible so that corrective measures are taken without impacting the construction milestones and completion dates.

E. Holding weekly (at a minimum) Construction Progress Meetings on the jobsite.

Led by the Construction Manager, these meetings will facilitate coordination during the construction phase among the utility, construction, and QA/QC disciplines. Open for attendance by VDOT's representative(s), the detailed day-to-day schedule of work is reviewed specifically with the responsible foremen and superintendents. The Utility Manager will also attend, along with specific utility company representatives, so that utility work can be directly coordinated with the construction crews.

F. Supplementing and assisting the utility companies with their work.

Because of our close relationship with the individual utility companies, we have employed several techniques that have allowed us to expedite and maintain greater control over their cost and schedule. First, in many cases, we are able to complete portions of their relocation design for them. This allows us to not only directly integrate relocation design with that of the overall Project's, but also complete this task more quickly. Second, we are proponents of the concept of a "common duct bank" for the relocation of multiple underground utilities, such as fiber optic cables. By negotiating an agreement between multiple utilities allowing us to design and construct the duct bank, each realizes a cost and time savings. VDOT and the Project itself benefits by the cost and time savings, but equally important are the benefits of having a single location for underground utilities instead of many individual locations to deal with for years to come. Finally, in addition to design activities for utility companies, we are able to perform portions of the actual relocation work ourselves, thus saving additional cost and time. Examples include constructing duct banks, drilling and setting of wood poles for aerial relocations, performing the "in-place" relocations, and setting up temporary traffic control requirements for the utility's use.

We are able to perform portions of the actual relocation work ourselves, thus saving additional cost and time.

Approach To Utility Coordination

For this Project, our Team will be following the VDOT Utility Relocation Policies and Procedures Manual with regard to the utility scope of work. As discussed above, we have already begun activities to ensure the success of the utility relocation process as we prepared this Technical Proposal, and Figure 4.4.2 depicts a general outline of the steps and activities we will perform once the Project is underway.

Figure 4.4.2 - Approach to Utility Coordination

4.4.3 Geotechnical

At the outset of design, geotechnical fieldwork will be initiated to ensure borings are completed at the spacing and locations which are required by the most recent VDOT Materials Manual of Instruction (MOI). All design information, including drainage facility locations, inverts and sizes, stormwater management basin grading and locations, noise barrier locations and heights, cross sections, roadway alignments, and roadway profiles will be provided to our geotechnical engineer for development of the required boring layout. The sequence of drilling test borings will be discussed by the Team such that the test borings on the critical path for the design are drilled with priority to provide critical information in a timely manner to be shared with the entire Team. For example, we anticipate that the bridge borings will be completed prior to the roadway borings, and infiltration tests will be completed for stormwater management facilities to ensure locations identified have adequate separation to ground water tables, or incorporate appropriate details to account for higher groundwater elevations. Due to our long working relationship with our geotechnical engineer, GeoConcepts Engineering, Inc., we have been proactively communicating with them to identify critical areas of work and areas of concern so that all information necessary for design and construction is coordinated efficiently between all team members.

4.4 **Project Approach**

The geotechnical testing procedures and boring locations will be selected in order to identify project challenges and risks, as well as appropriate mitigation strategies for these risks. As noted in the RFP documents, one major challenge to the Project is the replacement of unsuitable or soft material, especially that which does not meet minimum CBR requirements. Our Team's experience in the Hampton Roads District, with soils consistent with the types expected on this Project, and with work on similar Interstate widening projects, have led to the following process and testing techniques, which will be used on this Project:

1. ***Soft and Unsuitable Soils:*** Per the Geotechnical Data Report (GDR), very soft soils are within the Project limits and in some areas consist of a layer of soft compressible clay deeper than 36" below subgrade. The risk generally associated with soft compressible clays is long-term consolidation settlement. To identify the limits of this material, we will perform laboratory and in-situ testing to evaluate shear strength and consolidation parameters of the existing clay soils. New construction without some type of treatment/modification of soft compressible clays is not recommended due to unpredictable long-term settlement and subsequent pavement distress. Simple surcharging as a soil consolidation method can take a considerable amount of time, often years. However, surcharging combined with sand drains and/or prefabricated vertical drains (wick drains) may be utilized in the field to accelerate consolidation settlement of soft clay layers in order to achieve pre-compression prior to the construction of embankments and pavements.

   To address concerns associated with unsuitable materials located within 36" of proposed subgrade, mitigation can be provided through partial removal and replacement, treatment and stabilization in place, or partial removal and replacement with suitable fill and subgrade fabric such as Tensar Geogrids. Each of these options or combinations thereof will be considered following completion of additional geotechnical investigations.

2. ***Scour Analysis:*** Scour around the foundations of bridges piers and abutments is one of the major causes of bridge damage. Scour is a physical process related to the movement of the riverbed sediment as a result of the flow of water around and away from a structure. Our Team will obtain representative samples from the soils in the vicinity of the Lee Hall Reservoir, and will perform hydrometer analysis to estimate D50 and D90 values. We will then evaluate the scour potential in accordance with Hydraulic Engineering Circular No. 18. The results of this analysis will give a more accurate understanding of the soil conditions within the vicinity of the bridge over Lee Hall Reservoir. This analysis will be combined with the as-built information from the existing bridges to ensure proposed substructure designs not only account for anticipated scour, but also don't adversely impact the existing adjacent substructure elements which will remain in place.

3. ***Working in the Vicinity of Existing Foundations:*** Our Team has extensive design-build experience with widening existing bridges and working near existing foundations, and we understand the precautions that need to be taken. The existing bridge plans show that most of the abutments and piers are supported by pile foundations. Our widened bridge sections will use prestressed precast concrete piles, which will not be in conflict with the existing pile foundations. For the complete replacement of the bridges over Industrial Park Drive and CSX, pier foundation locations will be selected to avoid conflicts with existing foundation elements.

4. ***Maintaining Existing Structures:*** Proposed improvements for the existing bridges over Fort Eustis Boulevard and Lee Hall Reservoir consist of partial demolition, widening, modification to the superstructure, widening and modification of existing abutments and piers, and repairs to the existing superstructure and substructure.

   Soft compressible soils are present within the vicinity of these existing bridges, which could introduce concerns associated with settlement of individual piles or pile groups during installation of new piles for the proposed bridge widening foundations. The Team will consider damage to surrounding structures caused by vibrations or ground heave when driving new piles, and prevention of this type of damage requires a site investigation with complete characterization of the soils in terms of grain size distribution, grain shape, and plasticity of the fines. We will perform a detailed site characterization to fully understand the soil conditions and prevent damage associated with foundation settlement. We will also monitor the magnitude of vibrations generated during pile installations to avoid damage to the existing bridge structures. We will install temporary instrumentation such as geophones or seismographs in the vicinity of pile driving, and recorded data from these instruments will be compared with vibration standards for humans and structures as established by various agencies. Recommendations as to the appropriate pile sizes will also take into consideration selection of appropriately sized piles to account for different installation methods. For example, impact driving (appropriate hammer section for pile type using impedance approach), switching from impact pile driving to vibratory pile driving, or identification of the need for pre-drilling of hard upper soil layers may be considered to reduce vibrations.

5. ***Maintaining or Reconstructing Existing Slopes:*** As most of the work occurs within the existing median, we do not expect satisfactory slope stability to be a significant concern. Our Team will perform triaxial tests to estimate drained and undrained shear strength parameters of in-situ soils. We will also perform in-situ testing such as dilatometer testing to measure soil strength. These parameters will be used to perform long and short-term slope stability analyses for median widenings, as well as for modifications to outside slopes where proposed noise barriers may be installed.

4.4.4 Quality Assurance/Quality Control (QA/QC)

Our Team is committed to providing VDOT with a project that is of the highest quality. Our extensive experience in design-build has led to the development of a proven QA/QC Program, complete with comprehensive procedures, which address all aspects of quality from document inception to construction completion and final acceptance. We have customized this program for the Project to incorporate all Project specific contract requirements and the requirements of VDOT's Minimum Requirements for Quality Assurance and Quality Control on Design Build and Public-Private Transportation Act Projects, January 2012 (hereafter VDOT's Minimum QA/QC Requirements). Our Team has successfully implemented this Program, including utilization of independent Quality Assurance and Quality Control teams, on numerous design-build projects for VDOT over the past 12 years. As a result of our performance and commitment to QA/QC, VDOT has been able to reduce costs by minimally staffing these projects with only the basic oversight needed to confirm that quality standards are exceeded.

To protect the interests of VDOT and other Project stakeholders this Quality Assurance and Quality Control Plan (QA/QC Plan) shall be implemented and complied with by all Project Team members including:

the Design-Builder; design engineers, consultants and subconsultants; contractors, subcontractors and suppliers; and quality assurance and quality control inspectors, testing technicians and laboratories. This Plan is described on the following pages and reflects the responsibilities and unique relationships among each of the parties involved in this Project for both the Design QA and QC and Construction QA and QC.

Description of Design QA and QC Procedures

Providing a completed project, which meets VDOT's requirements and standards for plan development and long-term cost effectiveness, requires thorough QA and QC processes during design activities. The Team's Design QA and QC procedures conform to VDOT's Minimum QA/QC Requirements. Our Team's design QA and QC functions are performed separately by independent staff not involved in the other quality role or the production of the design documents.

As identified in our Team's organizational structure, the Design Manager will be Steve Kuntz, PE of Dewberry Consultants LLC. Steve will be responsible for oversight of all design disciplines, ensuring that each discipline coordinates with other disciplines to minimize rework and conflicts. He will also be responsible for monitoring the completion of the Design QA and QC functions for all design documents, preparing final design certifications and signing and sealing of all final and construction documents. Design QA will be performed by Jeremy Beck, PE and Design QC will be completed by competent design engineers who were not involved in development of the specific design elements they are reviewing.

Interdisciplinary Coordination: This project includes a variety of work items - roadways, bridge structures, retaining walls, noise mitigation, ITS, drainage, erosion and sediment controls, SWM facilities, permitting, right-of-way, and utilities. The interaction between the designers of these various disciplines and the Right-of-Way Manager, Utility Manager, Permitting Manager, and Construction Manager, is a vital part of our Design QA/QC Program to make the Project comprehensive and complete and to minimize inter-discipline conflicts. During the Design Phase of the Project, the Design Manager will hold weekly interdisciplinary coordination meetings to discuss the ongoing design work, identify potential conflict items or items that may be overlooked, schedule, and constructability challenges. Inter-discipline coordination shall be a major focus of the Design Manager and members of the Design Team before all milestone phases of development and document submission.

Design Quality Control (QC) Procedure

As indicated above, our Team has established a process for completion of Design QC functions which has worked successfully on several design-build projects, resulting in minimal VDOT reviews and timely approvals of our plan submissions. We perform a formal QC check of the plans, calculations, and other project documents (traffic reports, traffic analysis, hydraulic analysis, etc.) for each design submission. Qualified engineers not involved in the development of the design work will perform these checks and reviews, and provide comments back to the original design engineer for incorporation, revision, or explanation before design documents are finalized. The procedure undertaken by the QC engineer takes into consideration all of the information on the plans and in the computations, to verify conformance with contractual requirements and current VDOT standards and criteria.

The informal QC process begins with initial plan development and consists of the constant communication between design engineers developing various components of the Project design; for example, coordination between the traffic engineer and Utility Manager to avoid conflicts between overhead power relocations and proposed traffic signal placement. The formal QC process begins once a plan document or component is considered complete by the design engineer for the specific task. The completed document is then copied and marked as an official check-print for review. The Design Manager will assign a qualified engineer not involved in the original design to perform the formal QC review. The QC reviewer will review the check-print and document their comments on the "Review Comment Summary and Resolution Sheet" developed by our Team and similar to the VDOT review form. A sample of our Team's form is provided as Figure 4.4.3.

Figure 4.4.3

REVIEW COMMENT SUMMARY AND RESOLUTION SHEET

Submittal: (Check one) ☐ Initial Plans ☐ Intermediate Plans ☐ Final Plans

Designer: | Date:

Reviewer: | Page:

Package Document: | Discipline:

CODES
1. Accept Comment – Correct, Add, Clarify
2. Delete Comment
3. Clarify or Discuss
4. Resolution of Comment to Next Phase of Design

Comment No.	Dwg. No./ Page No.	Comment	Code	Response	Final Disposition	
					Code	Date

Signature of QA Reviewer: | Date:

Once the QC reviewer completes comments, the reviewer will meet with the design engineer to review the comments and identify the corrective action required. At this meeting, they will discuss the comments and agree on the acceptable resolution and necessary plan changes. If the QC reviewer and design engineer cannot come to an agreement on the appropriate action, the Design Manager will be called in to provide direction to resolve the comment in a way that ensures compliance with the contract requirements. Following this meeting and as the required design changes are implemented, the design engineer will complete the response section of the Review Comment Summary and Resolution Sheet. After revision of the plan, the design engineer will forward the revised plan back to the QC reviewer for final review and disposition of the comments. The QC reviewer will review the revised plan, document the final disposition for all comments that are resolved and add any additional comments that may have resulted from the design change. This back and forth process will continue until all comments are resolved and documented on the Review Comment Summary and Resolution Sheet.

The QC process will be undertaken by multiple reviewers who will review each and every aspect of the plans and computations, including geometric design (horizontal and vertical), drainage design, E&S design, maintenance of traffic (temporary traffic control) and sequence of construction, structural design, stormwater management design, signing and marking design, signal designs, etc. QC checks will be completed recognizing the Roadway Inventory and Major Design Criteria identified in RFP, Part 2 Attachment 2.2, understanding the commitments those major design criteria require in terms of geometric standards, drainage criteria, traffic designs, etc. In addition to reviewing the plan components, reviews will also be completed on all design calculations, computer input data, and project studies and reports.

Once agreement is reached between the QC reviewer and the design engineer, formal signatures indicating completion of the QC process for that component of the submission will be documented on a check print sign-off sheet. A sample of this "Design QC Check Print Sign-Off Sheet" is included as Figure 4.4.4 on the following page. Both the "Review Comment Summary and Resolution Sheet" and "Design QC Check Print

Sign-Off Sheet" will be kept in a QC notebook maintained as part of the Project records at Dewberry's Fairfax office. These documents will be available at anytime for VDOT review and audit following a formal submission.

Constructability Reviews: Prior to formal submission to VDOT, and coincident with design QC reviews, two (2) sets of plans will be provided to the construction staff for review and comment for a constructability review. The constructability review will be conducted by qualified construction staff, designated by the Construction Manager, to ensure that the proposed design does not introduce unnecessarily difficult, unsafe, or costly work for the construction staff, and to ensure that the proposed design and sequence of construction maintains the contract schedule. Comments generated from the construction staff will be submitted to the Design Manager for distribution to the design team for incorporation or further discussion. Agreement to necessary plan changes or explanation of the proposed work will be discussed between the Design-Build Project Manager, Construction Manager, Design Manager, and design staff to determine what changes to the plans will be implemented. All design changes resulting from the constructability review will be sent to the QC Reviewer to ensure that a complete QC review is performed prior to the QA process and submission to VDOT.

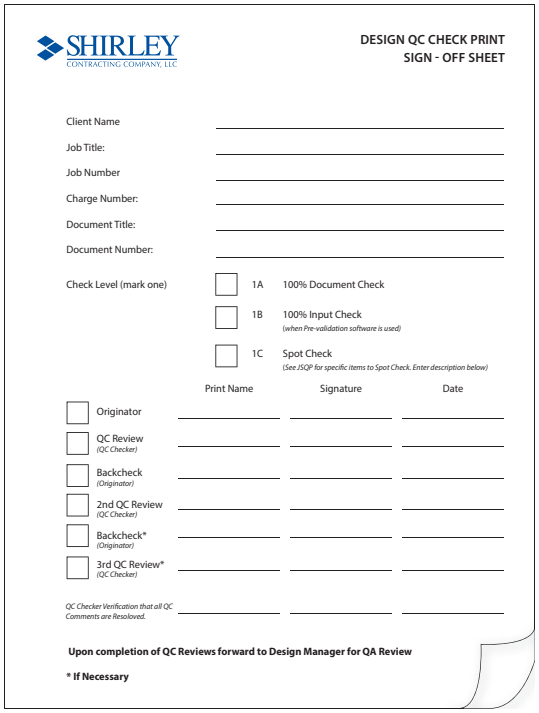
SHIRLEY
CONTRACTING COMPANY, LLC

DESIGN QC CHECK PRINT
SIGN - OFF SHEET

Client Name
Job Title:
Job Number
Charge Number:
Document Title:
Document Number:

Check Level (mark one)
1A 100% Document Check
1B 100% Input Check (when Pre-validation software is used)
1C Spot Check (See JSQP for specific items to Spot Check. Enter description below)

	Print Name	Signature	Date
Originator			
QC Review (QC Checker)			
Backcheck (Originator)			
2nd QC Review (QC Checker)			
Backcheck* (Originator)			
3rd QC Review* (QC Checker)			
QC Checker Verification that all QC Comments are Resolved.			

Upon completion of QC Reviews forward to Design Manager for QA Review

*** If Necessary**

FIGURE 4.4.4

Design Quality Assurance (QA) Procedure

As shown in the organizational chart, Mr. Kuntz has assigned Mr. Jeremy Beck, PE to perform the Design QA reviews. Once the QC comments have been addressed by the QC reviewers and design engineers, the final QA review will take place. Following completion of the design QC process, all check prints, "Review Comment Summary and Resolution Sheets" and "Design QC Check Print Sign-Off Sheets" as well as the updated/corrected set of plans and documents will be provided to the Design QA Reviewer for final review and approval. The purpose of the Design QA Review will be to:

- Verify that the design engineer assessed the design accurately and applied correct analysis;
- Verify qualified personnel are assigned to the specific design tasks;
- Evaluate whether the design solution is practical and cost effective;
- Verify implementation of and conformance to constructability reviews and findings;
- Confirm interdisciplinary reviews have been completed with all comments resolved;
- Evaluate overall conformity of final design documents to the design scope of work, project criteria, and client expectations;
- Confirm materials used and elements in the work have been designed to perform for the purpose intended

- Verify overall appearance, organization and technical accuracy; and
- Verify application of the seal, signature and date of the responsible registered VA Professional Engineer.

Once the Design QA check is completed, the Design QA Reviewer and Design Manager will sign and complete the "Design QA Review Memorandum" and include a record of it in the Project file. An example of the "Design QA Review Memorandum" is included as Figure 4.4.5.

The Design QC and QA processes is graphically illustrated by Figure 4.4.6 below. As indicated, the QA/QC process could require multiple iterations to ensure the design meets contract requirements, avoids conflicts between disciplines, utilizes the appropriate materials and supplies in the correct manner, and ensures that all QA and QC review comments are adequately addressed.

Figure 4.4.5

SHIRLEY

DESIGN QA
REVIEW MEMORANDUM

Client Name
Job Title
Job Number
Charge Number
Document Title
Document Number
Plan Submission Level
Concept Plan 10%
Filed Inspection Plan 30%
Right of Way Plan 60%
Final Plans 100%
QC Review Complete Date
Constructability Review Complete
Interdisciplinary Review Complete
VDOT LD-436 Form Complete
QA Review Complete with No Additional Comments

The design work in this submittal has been prepared in accordance with the design scope of work and industry standards of care.
Design QA Reviewer
Signature
Date

I certify that the design QA/QC process is complete and the submittal is in compliance with the design QA/QC Plan.
Design Manager
Signature
Date

Figure 4.4.6

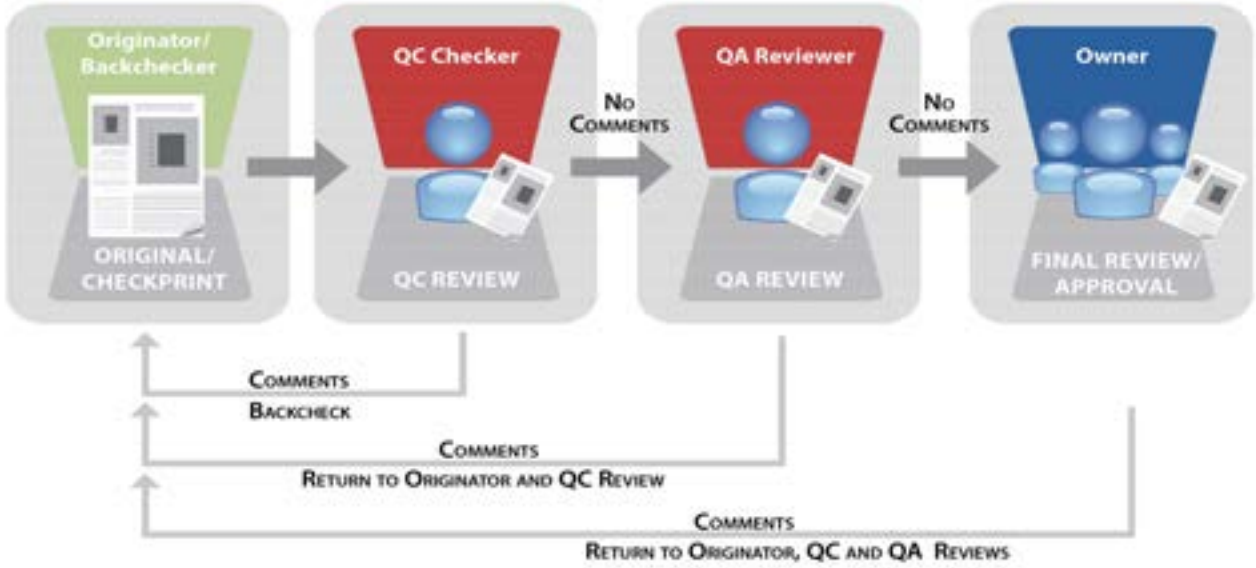

Procedure to be used to develop, check and review an individual document through the Design QC and QA processes. Check-prints and sign-off sheets are maintained as a record of the QC and QA activities performed.

As verification of the completion of the QA and QC reviews, each submission will be accompanied by copies of the completed "Design QC Check Print Sign-off Sheets" and "Design QA Review Memorandum" in addition to the standard VDOT LD-436 form showing that plans have been audited, approved and include all appropriate elements for each plan submission.

QA/QC Field Changes To The Design

Field changes to the design occurring after final submission and release of the Construction Documents to the field shall be subject to the same rigorous procedures stipulated in the Design QA/QC Plan. Requests for field changes shall be reviewed by the design engineer and environmental staff that performed the original design and obtained permits. No field changes shall be allowed without approval by the Design Engineer indicating compliance with applicable design standards, project permits and commitments, and the certification of the Design Manager indicating completion of all Design QA and QC procedures. After certification by the Design Manager and approval by VDOT, the change can be implemented in the field and documented on the as-built drawings.

QA/QC Approach to Unique Design Element/Work Activity

While stormwater management facilities are not unique to transportation projects, the new II-B criteria and use of Department of Environmental Quality (DEQ) Clearinghouse design standards are a new criteria, which, to date, have not been implemented on large-scale VDOT transportation projects. The new II-B design criteria required to be followed on this Project represents a unique design element which is critical to the Project's success. The reason the stormwater management and II-B criteria are critical is due to the wide range of impacts the final SWM design can create, from environmental impacts, to right-of-way impacts, to schedule impacts. Our Team is currently involved on the largest projects in the Commonwealth to implement the II-B criteria, which is the MWAA Dulles Rail Phase II - Silver Line project. This project experience has provided our Team with a unique and detailed understanding of the new requirements, the agency's (DEQ) intent of the new requirements, as well as an understanding of the new and unique elements, which must be checked and reviewed to ensure all elements of the criteria are met. Our Team's QA/QC approach for the II-B SWM design will be in accordance with VDOT's QA/QC program, will utilize independent reviewers and designers and will culminate with confirmation from the QA Manager that the appropriate QA and QC procedures have been followed and completed.

At the outset of design, locations of stormwater management facilities will be coordinated between roadway drainage engineers, roadway design engineers, and environmental staff. Locations will be identified which address both quality and quantity components of the II-B criteria while minimizing right-of-way and environmental impacts. Once the SWM design is completed, including development of all detail sheets and computations, the QC review process will begin. At this stage, a QC reviewer who was not involved in the detailed design of the SWM facilities will begin reviewing the overall water quality and quantity requirements. This will be completed by verifying that the project mapping and drainage area mapping correctly represent the project limits, land uses, drainage divides and soil groupings. Areas generated from the mapping will be crossed referenced with design spreadsheets. Once the requirements have been verified, the SWM design will be reviewed to satisfy the appropriate requirements. Water quality benefits for the Project as a whole will be checked using DEQ provided spreadsheets. Water quantity will be checked at each project outfall for channel and flood protection. After the project requirements have been checked, each individual BMP will be checked to verify it meets current DEQ VA Clearinghouse design standards such as side slope limits, media area, pretreatment, and freeboard requirements. In addition, the DEQ checklists will be used to ensure that the design satisfies DEQ design and submission requirements, and all computations will be cross checked to ensure consistency.

Simultaneous with the review for compliance with II-B criteria, roadway design, environmental, and construction staff will review the plans for any concerns which are not related to computation of the

stormwater management design. Concerns could range from unexpected environmental impacts in avoidance areas to the need for additional guardrail for wet-pool facilities to access challenges associated with construction of linear "trains" of facilities and the way in which they will be implemented during construction for temporary sediment basin facilities. When these reviews are completed, any comments will also be provided to the original designer so that appropriate modifications can be made, or so that discussions can occur which adequately address the concern without altering the original design.

Following completion of the QC review process, the QA reviewer will check the QC comments and ensure that adequate modifications have been incorporated, and ensure that the QC reviewer and design engineer are both satisfied that the plans are correct, complete, and in compliance with standards. The QA reviewer will also ensure that designs and details are in compliance with contract requirements and any special provisions for stormwater management, environmental commitments, and other details related to the II-B criteria and SWM facilities. Only after this process is complete will the QA documentation be completed, signed and turned over to the Design Manager for formal submission.

Description of Construction QA/QC Procedures

Our Team's Construction QA and QC Procedures, found within our QA/QC Plan, conform to VDOT's Minimum QA/QC Requirements. Our Plan stipulates the specific requirements of the Project and implements appropriate Witness and Hold Points for inspection of work at critical stages. These critical inspection points allow for VDOT review and approval and identify inspection requirements by the key members from the Design Team prior to construction activities continuing. Having this level of Design Team involvement in construction activities allows the engineer to confirm that actual construction conditions conform to the parameters anticipated during design.

During construction, the QA and QC Teams will follow the established and approved QA/QC Plan. The QA/QC plan is structured to ensure that QC and QA functions are performed independently and that procedures and work products are regularly audited. Key elements of the Construction QA/QC Procedures are summarized in the following paragraphs.

Construction Quality Assurance

The Quality Assurance Manager (QAM), Richard Allen, P.E. with Quinn Consulting Services, Inc., is independent of the Designer, Contractor and QC Team, and is responsible for the Quality Assurance of the roadway, bridge and other physical construction operations, including the independent QA testing technicians. The QAM will report directly to the Design-Build Project Manager and have the authority and responsibility to stop work and withhold payment for any work not being performed in accordance with the Contract requirements or lacking the QA/QC documentation necessary to prove that the work meets the Contract requirements. The Design-Build Project Manager gives the authority to the QAM in writing prior to the start of construction and a copy of the letter is included in the QA/QC Plan. The QAM will oversee and direct the personnel responsible for performing QA inspections and testing of all materials used and work performed on the Project. He will have personnel representing the QA Team that report directly to him and are not part of the QC Team.

Construction QAM Responsibilities

- Oversee QA inspections & testing
- Provide document control
- Report findings to Design-Build Project Manager
- Report findings to VDOT

All QA inspection staff will complete daily reports, QA Independent Assurance (QA IA), and verification, sampling, and testing (QA VST) reports of all quality assurance inspections. The QAM will compare QA IA and QA VST results to the QC, Owner Independent Assurance (OIA) and Owner Verification Sampling and Testing (OVST) results to ensure consistency and accuracy at all testing levels. The QAM will determine and certify to VDOT whether the materials and work are in compliance with the approved drawings, specifications, and applicable VDOT standards and reference documents as outlined in the Contract. The QAM will also ensure that all inspectors have adequate certifications for the testing and that copies are maintained in the QAM project files on site. The QAM has autonomy and the responsibility to coordinate QA inspections and report findings directly to VDOT.

The QAM oversees the establishment and maintenance of a comprehensive system for project documentation that will organize, track and disseminate all Construction QA and QC information. The records will present a factual representation of the work performed by the Design-Builder on the Project and allow a determination by the QAM and VDOT that all work was completed and tested in accordance with the plans and specifications. All documentation will be adequately identified and cross-referenced to support a field audit by the QAM and VDOT during the life of the Project as well as final audit after Project completion. As a minimum, the QAM will audit the testing and inspection records each month prior to certifying the monthly payment application.

Construction Quality Control

The Construction Quality Control Manager (QCM), Louis Jarrett, with Dewberry Consultants LLC, will manage the day-to-day QC inspections and material testing of the construction as directed by the Construction Manager and will report directly to the Construction Manager. The QCM and the QC Team are responsible for inspection of the construction activities and all QC sampling, testing and analysis of materials on the Project to ensure that construction quality is verified at frequencies exceeding those required by the VDOT Construction Manual, the Materials Manual of Instructions and Tables A-3 and A-4 of VDOT's Minimum QA/QC Requirements. As the QCM, he assures that the QC materials sampling and testing is consistent with the QC plan.

Construction QCM Responsibilities

- Manage QC inspections & material testing
- Inspect erosion and sediment controls
- Generate field inspection reports
- Report to Construction Manager

Erosion and sediment controls will be inspected by the QC Team to ensure implementation in accordance with the approved plans, the erosion and sediment control laws and regulations, and the erosion and sediment control standards and specifications approved by the Virginia DEQ.

All QC staff actively inspecting and/or testing segments of work will complete an Inspector Daily Report (IDR). The IDR's will be electronic dairies and will include, as an attachment, copies of all QC materials tests completed for the day's activities. Signed hard copies of the IDR's will be submitted to the QCM on a daily basis for review and approval. The Lead QC Inspector will complete an electronic Daily General Report, which will summarize the work covered by the IDR's. Copies of all signed Daily General Reports, IDR's, and test reports will be forwarded to the Construction Manager, QA Manager and others of the Design-Build Team for use and review while the original documents will be placed in three-ring binders, by month and maintained as part of the permanent QC records. All binders will be stored in fireproof storage

cabinets at the Project site and will be available for audit by the QAM and VDOT at any time. A weekly report will be produced by the Lead QC Inspector that contains summaries of tests, materials placed, actions taken for failing materials, NCR's, safety, inspection, environmental and schedule challenges.

QA/QC Approach to Significant Construction Element/Work Activity

The Shirley Team will provide comprehensive QA/QC services for every design and construction element on the Project thereby minimizing VDOT's contract administration efforts while still preserving VDOT's oversight and audit opportunities. A unique element on this Project requiring superior construction quality control will be the multi-staged demolition and replacement of Bridges B-616 and B-617 over Industrial Park Drive and CSX. Although, not a requirement of the RFP, our Team has identified that complete replacement of these structures provides the most efficient and economical design for VDOT and the Project, with the added benefit of new structures with minimum life cycle costs.

Stage 1 - Partial Demolition of Existing Structures B-616 and B-617

Figure 4.4.7 - QA/QC Approach to Significant Construction Element/Work Activity

As shown in Figure 4.4.7, as is our Team's practice and per the minimum requirements set forth in the VDOT QA/QC Design-Build Manual, the first step prior to starting any activity is to hold a Preparatory Inspection Meeting with VDOT, the QA and QC inspection teams, the Contractor and any subcontractors who are performing or inspecting the work. As part of Stage 1 of the bridge work for B-616 and B-617, partial demolition of the existing structure will be performed. For the demolition stage, a preparatory meeting will be held by the QAM and the following checklist of items will be discussed in detail:

1. Identify all plans, specifications and special provisions that are applicable to the work.
2. Confirm that all sources of materials have been submitted and approved.
3. Verify that sublet request forms are submitted and approved for any subcontractors.
4. Identify each QA and QC inspector, testing technician, and laboratory responsible for the inspection of the work and confirm their certifications.
5. Identify inspection checklists for each activity. The checklists provide a systematic outline of critical inspection items and testing requirements.
6. Discuss the specific inspection, testing, and documentation requirements of the activity.
7. Verify that all permits are approved including the CSX Right of Entry Permit, the VSMP Permit, and Clean Water Act Permits.
8. Verify that the bridge engineers have performed a load-rating analysis of the existing structure in its partially demolished state and any temporary remediation is calculated and approved.
9. Discuss specific demolition plans and requirements specific to working in the CSX right-of-way.
10. Verify procurement and schedule of the CSX flagman and his specific work hours.

11. Provide opportunity for the contractor to discuss the sequence of construction, and schedule.
12. For the demolition activity, a specific safety discussion will be held and the following details will be addressed:
    a. Protection plan of existing traffic both on I-64 and underneath along Industrial Park Drive
    b. Protection plan of existing rail corridor including tracks, rail and ballast
    c. Lead paint abatement plan if existing steel girder are torched or cut
    d. Lifting plan for removal of existing bridge girders
    e. Work plan adjacent to overhead transmission power lines
    f. Debris removal plan
    g. If nighttime work is proposed, a lighting plan will be required
13. Discuss any project specific concerns identified by the Design Team or in the Geotechnical Report.
14. Highlight all witness and hold points for VDOT inspection and oversight.

Following the Preparatory Inspection Meeting, all parties will have a full understanding of the plan of operation for construction, inspection and documentation of the activities. The QAM will document this in detailed Preparatory Meeting Minutes and distribute them to the contractor, inspection teams, and VDOT within three days of the meeting.

The Stage 1 demolition of the bridges will begin following the Phase 1 traffic shifts and placement of the required MB-11a traffic barrier parapets on the existing bridge decks. Prior to demolition, the QAM will verify that the demolition plan has been approved by VDOT and CSX consultant's staff. He will verify that permitting is in place and the activity is ready to begin. It will be the QC inspector's responsibility to inspect and document the following:

- Bolts for the MB-11a parapets have been field tested to verify minimum pullout strength and manufacturer requirements;
- Crews have implemented the required shielding and protection of existing traffic and CSX facilities;
- Coordinate all work with the CSX flagman and construction staff and that all communication plans are in place;
- Monitor maintenance of traffic and lighting to ensure safety to not only the traveling public but all workers as well;
- Confirm crane certifications, lift charts and conformance to the Contractor's Lift Plan of existing bridge girders;
- Confirm overhead utilities are clear from conflict and contractor is aware of hazards; and
- Verify debris is removed to approved disposal sites and that areas to be re-opened to traffic are clear of hazards, dust and debris.

In conjunction with maintaining this documentation, QA and QC inspectors will constantly monitor conditions of the existing structure and adjacent roadways to verify that the integrity of all elements is intact as planned.

Stage 1a - Construction of the new inside widening of Bridges B-616 and B-617

Following partial demolition of the existing structures, a portion of the new bridges will be constructed to carry I-64 traffic shifted to the inside to allow the 2nd stage of the bridge demolition and replacement. The new inside widening will be designed to current VDOT standards but our Team's plan is to eliminate

one intermediate pier and create a new two span structure as opposed to a three span structure. In doing so, the interface between the new structure and the partially demolished old structure will present constructability challenges for the Project staff. Most notably, temporary shoring of the new abutments will be required so that when the old structure is removed in Stage 2, that a clean tie-in to the new bridge elements is achievable and structurally sound. The QA/QC staff will be tasked to verify and confirm that the construction elements and planning of the contractor are adhered to and followed. This starts with the substructure construction of the new bridges;

Substructure Construction: The abutment construction inspection consists of several elements, each of which must be carefully monitored/inspected in turn before the next element is constructed. A pre-construction meeting led by the QAM and attended by members of the construction staff and the construction inspection staff will be held prior to construction of each element of the abutment. The meeting will identify the requirements and expectations of each member of the team, verify materials approval, review testing and testing frequency, as well as identify any witness and hold points required for each element of the abutment construction. In addition to ensuring that the construction and materials utilized are in accordance with the plans and specifications, the QA/QC inspection staff is responsible for the following:

- Reviewing the contractors shoring and excavation plan for the new bridge elements and foundations. Confirm that any support of excavation has been submitted and approved by the design engineers and VDOT.
- Determination by the Design-Build Team Geotechnical Engineer that the required foundation capacity is achieved. Confirm that the contractor has submitted and scheduled the independent testing agency to perform WEAP Analysis, PDA testing and Load testing of pile or caisson foundations.
- Reviewing the stakeout of each abutment to make sure it is in accordance with the plans.
- Making certain that the forms are constructed to the dimensions shown in the plans.
- Making certain that the reinforcing steel is installed in accordance with the plans (that the proper type (black or CRR), size, splice length, cover, clearances and spacing match the plans).
- Testing of concrete and casting of test cylinders to ensure compliance with approved plans, mix designs, temperature, slump, air content and yield.
- Making certain the required concrete strengths have been attained either by the use of field cylinders or 28-day break results prior to placement of concrete for the next element.
- Ensuring that anchor bolts are installed correctly (proper embedment, projection and plumbness).
- Ensuring that proper consolidation/vibration procedures are utilized to prevent segregation and ensure that concrete fills all portions of the forms.
- Ensuring that the forms are removed only after the concrete reaches the required strength.
- Ensuring that backfill material, placement and its compaction are in accordance with the plans and specifications.

Superstructure Construction: Once the abutments have been constructed, the required concrete strength has been attained to allow placement of the bridge beams, and placement of bearing assemblies is complete and approved, construction of the superstructure can proceed. The superstructure consists of several elements, including setting of the beams, construction of the deck slab and integral backwall and construction of the parapets. A pre-construction meeting led by the QAM and attended by members of the construction staff and the construction inspection staff will be held prior to construction of each element

of the superstructure. The meeting will identify the requirements and expectations of each member of the Team as well as identify any witness and hold points required for each element of the superstructure construction. In addition to ensuring that the construction and materials utilized are in accordance with the plans and specifications, the QA/QC inspection staff is responsible for the following:

- Ensuring that shop drawings for beams, bearings, stay-in-place forms, etc. have been submitted and approved.
- Ensuring that the bridge beams, as delivered to the site, are not damaged or are repaired in accordance with approved repair procedures prior to installation.
- Ensuring that deck forms are installed in accordance with approved shop drawings, plans, specifications and as-built conditions.
- Ensuring that the reinforcing steel is installed in accordance with the plans (that the proper type (black or CRR), size, splice length, and spacing match the plans).
- Ensuring that the proper adjustments to the screed rail are made to account for the design dead load deflections and the as-built top of girder elevations.
- Testing of concrete and casting of test cylinders to ensure compliance with approved plans, mix designs, temperature, slump, air content and yield.
- Ensuring that proper concrete placement procedures and techniques are utilized so there are no voids or honeycombing in the concrete (particularly around the beam in the integral back wall).
- Making certain the required concrete strengths have been attained either by the use of field cylinders or 28-day break results prior to placement of concrete for the next element.
- Ensuring that formwork is not removed before the required concrete strength is attained.
- Ensuring that compaction of fill under the approach slab is in accordance with project requirements.
- Ensuring that the proper joint width is constructed at the sleeper pads at the ends of the approach slabs.
- Following completion of the deck, approach slabs and parapets, the QAM will also confirm that the Load Rating Analysis of the new structure has been approved by VDOT and that the VDOT Safety Inspection has occurred and punchlists completed prior to opening the structure to traffic.

In Stage 2 of the bridge construction, the elements common to Stage 1 and 1a will be repeated. The QA/QC Managers will ensure that all planning and testing elements are once again reviewed and discussed amongst all parties. To summarize, for all construction elements, the Shirley QA/QC Plan will minimize the effort VDOT must expend performing QA/QC on the Project by implementing proven and time tested QA/QC procedures that include comprehensive preparatory meetings, regular inspections using prepared checklists, thorough QA/QC documentation, regular document audits, and a system of checks and balances that begins at design and continues to project close-out.

Project Staffing

The Construction QA Team will consist of a full time Quality Assurance Manager, assisted by a full time Senior QA inspector and an Office Engineer from Quinn Consulting Services, Inc., to complete on-site QA inspections/testing and manage the QA/QC documentation system. Quinn Consulting Services will provide additional on-site testing technicians as necessary based on construction volume to complete on-site soils and concrete testing. The QA Team will be supplemented by Geotechnical Environmental & Testing Solutions, Inc. to complete off-site laboratory testing of materials.

The Construction QC Team will be comprised of the Quality Control Manager assisted by senior and junior roadway inspectors, and a structural inspector from Dewberry to complete QC inspections. Additionally, ECS, Inc. will provide testing technicians to perform on-site QC testing. ECS, Inc. will also perform off-site laboratory testing for the QC team. The QC team is supplemented by additional inspectors and testing technicians during peak construction timeframes.

Scheduling of Inspection and Coordination with VDOT

During the design phase, the Design Team will identify items of work that require special attention by the Construction QA and QC Teams. The applicable levels of inspection and standards of quality of these items will be addressed with the Construction Manager, the QCM and QAM prior to the start of construction and will be incorporated in the QA/QC Plan and the Project's CPM Schedule. During construction, the QCM will coordinate daily with the Construction Manager in reviewing the Project schedule and determining the requirements of the QC Team to adequately and properly monitor the construction activities for certification of compliance to VDOT. Furthermore, the QCM will coordinate with the QC Team to continuously monitor and assure compliance with erosion and sediment control, environmental permit obligations, and maintenance-of-traffic procedures.

On a weekly basis, the Construction Manager will hold a Construction Progress Meeting attended by the QAM, QCM, VDOT representatives and construction personnel to discuss the progress of construction, review the previous weeks QC and QA tests, and discuss the upcoming inspection requirements based on a two week look-ahead schedule. The schedule review will highlight any upcoming Witness and Hold Points to provide ample time for VDOT to schedule inspections. This meeting also provides an opportunity to discuss ongoing testing and inspection procedures, documentation, and any issues that need to be addressed/resolved. These weekly meetings have been a valuable tool on our other design-build projects, providing a regular forum to make sure the inspection and testing process is working well and that all issues are addressed.

The Quality Assurance and Quality Control procedures outlined in this section are the result of many years of completing Design-Build and PPTA projects for VDOT. With each new project we have improved upon the QA/QC process based on project experience, VDOT expectations and feedback, and changes in VDOT QA/QC specifications. Shirley has a focused commitment to quality, both to minimize rework during construction and reduce long term maintenance costs.

4.5 - Construction of the Project

4.5 Construction of the Project

4.5.1 Sequence of Construction

Our Team has developed a sequence of construction for the Project, which meets the RFP requirements by completing the Project on December 1, 2017. As an added benefit to the traveling public, we intend to have the new inside travel lanes open to traffic on September 13, 2017. In order to meet the completion date, we will follow the sequence below:

We intend to have the new inside travel lanes open to traffic on September 13, 2017.

- ***Phase 1:*** Along both I-64 Eastbound and Westbound, place temporary pavement markings and shift traffic towards the outside to allow placement of temporary traffic barrier service adjacent to the median widening. At bridge locations, the outside shoulder will be strengthened to allow traffic to shift further right for bridge sequencing.
- ***Phase 2:*** Construct median widening along both I-64 Eastbound and Westbound, demolish and construct new portions of Bridges B-618, and B-619 over Fort Eustis Boulevard, Bridges B-620 and B-621 over Lee Hall Reservoir, and Bridges B-616 and B-617 over Industrial Park Drive. Upon completion, shift traffic towards the newly constructed median widening.
- ***Phase 3:*** Perform all pavement repairs per Part 2, section 2.6.2 of the RFP documents and Demolish and Reconstruct the portions of Bridges B-616 and B-617 over Industrial Park Drive started in Phase 2. For Bridges B-618 and B-619 over Fort Eustis Blvd and Bridges B-620 and B-621 over Lee Hall Reservoir, the required joint repairs and substructure improvements will be made. The majority of noisewall construction will also take place in this Phase. If Option 2 is selected, then the improvements at Fort Eustis interchange will be constructed. Upon completion of Phase 3, traffic will be shifted to its ultimate location.
- ***Phase 4:*** Complete any remaining pavement repairs and then place 0.75" THMACO Surface Treatment Asphalt and complete "Finishing" Items. If Option 1 is selected, then the additional 2" of SMA 12.5 inch Asphalt would be placed in this Phase.

Provided below is a description of each stage and the benefits of this proposed sequence:

PHASE 1

To allow room for the placement of temporary traffic barrier service along the median widening, the existing I-64 eastbound and westbound travel lanes must be shifted several feet to the outside. We will accomplish this by eradicating existing pavement markings and placing temporary pavement markings creating 2-11' travel lanes shifted to the outside or right of the median. Our current plan does not require the existing outside travel lanes to be temporarily strengthened for the majority of the Project. However, at each bridge location along the alignment, existing traffic is required to shift further to the right traveling on the entirety of the existing right shoulder as traffic tapers to the right and then away following traversing of the bridge. In these cases, we anticipate that the existing right shoulder requires temporary strengthening by milling out the required width for the shifting of traffic and placement of temporary pavement to provide the necessary strength as outlined in Part 2, Section 2.6.1 of the RFP documents. We will complete all work during nighttime operations utilizing temporary single lane closures adjacent to the work. The length of the construction zone on any night will be sized to the production capabilities of the eradication

and striping or milling and paving operations but will not exceed the allowable closure lengths per the Virginia Work Area Protection Manual (WAPM). During milling and paving operations, at no time will a full-depth milled section be opened to traffic without the paving being completed within 2" of the existing pavement surface. Temporary pavement markings and markers will be placed on the new alignment to maintain 11' travel lanes and a 1' buffer to the temporary concrete barrier, which will be placed adjacent to the median widening work that will be completed in Phase 2. Our Team will plan the work with safety at the forefront with built-in contingencies in the event of inclement weather or equipment failure.

Since Phase 1 work is all temporary construction and will not require any right-of-way acquisitions or utility relocations, our Team will seek an early approval of the first submission of roadway plans for the MOT/Phase 1 design sheets in order to get a head start on the Project schedule. We have done this on many of our design-build projects having great success while maximizing the possibilities for early completion.

PHASE 2

Once our Team shifts traffic as noted at the end of Phase 1 above, construction of the majority of the Project elements will begin. Specifically, Phase 2 consists of all of the I-64 median widening, drainage improvements, stormwater management improvements, and bridge construction. At Bridges B-618 and B-619 over Fort Eustis Blvd and Bridges B-620 and B-621 over Lee Hall Reservoir, partial demolition of parapet and outer deck segments will occur. These structures will be widened in accordance with the RFP documents. At Bridges B-616 and B-617 over Industrial Park Drive and CSX, Stage 1 (partial width) demolition of deck and parapet segments will occur as well as demolition of abutment and pier elements. Per our Team's concept, the Stage 1 total reconstruction of the bridges will occur on a different span arrangement than the existing bridge. All work on Bridges B-616 and B-617 will be coordinated with CSX and its engineers and operations staff. Even though our Team's bridge concept differs from the RFP Conceptual drawings by shifting abutment B outside of the CSX right-of-way, right of entry will still be required during demolition and construction of the new bridges. CSX will require review and approvals of all demolition, lifting, and work plans prior to commencement of construction activities.

All Phase 2 work will be completed behind temporary concrete barrier to provide safety for construction and inspection staff, but also to maintain mobility of public traffic through the construction work zone. We intend to stage construction of the median widening along I-64, having divided the Project into three distinct areas of work that can be managed and supervised by dedicated personnel during construction. Initial work will include the staging and construction areas of each bridge pair as well as those areas identified for removal and replacement of soft or unsuitable soils. The phased sequencing of the widening ensures that areas of temporary pull-offs will be maintained throughout the Project length. As required by the Virginia WAPM, a minimum of 1 emergency pull-off will be maintained per mile of temporary barrier placement in each direction of the highway. As work progresses linearly, median pavement, which was constructed as part of the initial phases, will be utilized for construction vehicle acceleration areas and for vehicle breakdown refuge. Details for these pull-offs will be incorporated in the temporary traffic control plans, and will be consistent with details our Team successfully and safely used for the recent widenings of I-66 and I-95.

Shifting traffic to the far outside shoulders at bridge locations in Phase 1 will allow for placement of bolt-down MB-11a barrier over the existing bridges to facilitate removal of the existing median parapets and a portion of the existing bridge decks. The width of the bridge deck removed during this stage will be

based on providing enough room to construct a portion of the new bridge, which will accommodate two 11' travel lanes of traffic during the later construction in Phase 3.

As the Phase 2 bridge reconstruction progresses, grade crews will begin the required excavation work, which will include the soil remediation in the median that compensates for the suspected poor soils under the future pavement widening. Methods such as 'undercut and replace', lime or cement soil stabilization and/or use of geo-stabilization grids and fabrics will be utilized to amend or remediate the existing conditions. As right-of-way is acquired for Stormwater Management controls, crews will construct the required basins and ponds in order to collect and treat run-off from the new impervious pavement areas. Since the basins and ponds are generally located outside the clear zone on the outside of roadway alignment, they can be constructed without protection or behind existing guardrails or traffic barrier located off the existing edge of shoulder. Any new drainage crossings of the existing I-64 travel lanes will be performed using trenchless or phased open cut methods. Jacking pits will be located to allow adequate clear zone requirements and will be protected in accordance with WAPM standards. The majority of new drainage in the median will be constructed in Phase 2 concurrent with bridge and excavation activities.

Foundations located on the median side of the highway for the new overhead signs and message boards will be constructed in this phase of construction. Fine grade and paving crews will place the required pavement section to include aggregate base, under drains, drainage layer and asphalt courses. The surface course of asphalt will be placed through the new 2" of SMA-12.5 to tie-in to the existing travel lanes.

PHASE 3

Following completion of Phase 2, travel lanes will be shifted to the newly constructed inside travel lane and existing left lane. At each bridge pair location, traffic will be required to shift slightly more to the inside in order to make room for the next phase of bridge construction. In the case of Bridges B-616 and B-617 over Industrial Park Drive and CSX, our Team will be completely demolishing the remaining existing structure and replacing the existing 4 span bridge with a new 2 span structure. This requires a slightly further shift of traffic to the inside to allow room for the next phase of bridge construction. In this case, we will utilize the newly constructed full-depth left shoulder to temporarily accommodate traffic while the next phase of bridge construction ensues. For all bridge pairs, placement of temporary traffic barrier on the right side of traffic during this phase is required for the bridge deck joint and surface repairs and removal of the remaining portions of the bridges and subsequent construction of the remaining portions of the new bridge. This lane placement during this stage provides a full width median shoulder. On the right side, our Team anticipates that Group II Drums can be placed to keep traffic in the two open travel lanes. This arrangement provides increased safety for removal of disabled vehicles, as well as to eliminate the concerns with speed reductions adjacent to temporary traffic barriers. Nighttime closures will be utilized to perform the necessary pavement rehabilitation identified in Part 2, section 2.6.2 of the RFP documents.

During Phase 3, work on the outside of the I-64 travel lanes will occur to include construction of the required noise walls as well as installation of the ITS infrastructure and system requirements. The outside foundations for the new overhead sign structures will be constructed and erected in this phase and new ground mounted signs will be installed as well.

If Option 2 of the RFP is chosen, then the improvements to the Fort Eustis Interchange acceleration and deceleration lanes will be constructed in Phase 3. Temporary traffic barrier service will be utilized to

protect workers and the traveling public. Since the existing right travel lane will not be functioning in Phase 3, this allows room for placement of barriers to create the pavement tie-ins necessary to construct the ramp improvements at the interchange.

Finally, in Phase 3 of the Project the required outside shoulder strengthening will occur. This work will be performed by removing the required six inches of existing material via use of a milling operation. The in-situ material will then be compacted in place. Immediately following compaction, the required base asphalt paving will be installed. This operation will be performed without lane closures; however, operations will be planned so that no drop-offs greater than two inches are remaining at the end of the shift. The intermediate asphalt lift will be placed within days of the base lift to keep the drop offs to a minimum and so that any required guardrail repairs to the outside shoulder can occur prior to the start of final paving in Phase 4.

PHASE 4

Phase 4 work consists of placement of all final surface asphalt material. In the case of the Base Contract, this includes a 0.75" application of a thin hot mix asphalt concrete overlay (THMACO) to the existing and new travel lanes and shoulders. Due to the multiple pavement shifts during construction, placement of surface asphalt at the end of all construction will ensure that temporary pavement markings are not used on the finished product, and that all final paving is completed at the same time. This provides for a smooth, "clean" look at the end of the Project when all of the thru lanes are opened to traffic on a permanent basis. If Option 1 is selected, then the additional 2" of SMA 12.5 Asphalt would be placed in this Phase.

SEQUENCE OF CONSTRUCTION BENEFITS

The proposed sequencing of construction has several benefits which include:

- Avoids construction sequences which provide no shoulders on both sides of the road during long construction durations. Our sequence maximizes safety by:
  - Allowing for vehicular breakdown refuge, emergency response and safe law enforcement
  - Traffic operations will avoid the "cattle chute" effect of double barriers which create unnecessary slowing of traffic and delays
  - Construction vehicles and dump trucks will be able to safely accelerate and decelerate outside of the existing travel lanes beyond the limits of the temporary barriers.
- Since Phase 1 work will be all temporary construction and not require any right-of-way acquisitions or utility relocations, our Team will be able to start construction immediately upon approval of the MOT/Phase 1 design plans in order to get a head start on the Project schedule.
- Outside paved shoulder strengthening will be completed in Phase 3 following completion of median widening. This allows the shoulder work to be completed without the need for temporary lane closures, providing a substantial improvement for motorists.
- Allows multiple concurrent operations to be performed with the appropriate supervision and safety devices in place.
- Allows the complete reconstruction of the Industrial Park Drive Bridges to be built within the construction timeframe.

These benefits to the traveling public are significant and have been identified based on our Team's successful implementation in the past. They provide significant safety benefits to the traveling public which will help

generate and continue public support for the Project. Additionally, they represent areas where we have gone "above and beyond" the requirements of the RFP documents.

Right-of-Way Considerations

Our Team's construction sequencing will take into account the property acquisitions required on the outside of the I-64 alignment for the required Stormwater Management facilities and drainage elements as well as any easements that may be required for utility relocations and noise wall construction activities. We will sequence the right-of-way acquisitions to ensure critical properties associated with Stormwater Facilities are acquired first to allow the proper project drainage and treatment of stormwater at the onset of construction.

Environmental Considerations

To date, our Team has never been delayed by acquisition of environmental permits on any of our design-build projects, and the upfront work we have already completed will ensure that track record is maintained on this Project as well. Our Team has already begun initial investigations and research on the presence of existing wetlands along the corridor. We will incorporate this information into the final design in order to minimize and avoid impacts to existing wetlands and to preserve as much of the existing wetlands and streams as possible. The location of the storm water management basins will have a large affect on the total wetland impacts and our Team will aim to incorporate grading and sizing modifications which will maximize their effectiveness while minimizing impacts. Immediately following NTP, our Team will initiate field surveys to identify existing wetland and stream locations in order to receive the required jurisdictional determination (JD) with the COE. We will then immediately apply for the appropriate permits when the plans are developed to approximately 60% complete.

During construction phasing, our Team will ensure that the Erosion and Sediment (E&S) control documents are strictly adhered to and the approved Stormwater Pollution Protection Plan (SWPPP) is followed. This starts with installation of all Phase 1 E&S devices such as silt fence, diversion dikes, sediment traps and basins prior to grubbing and grading operations. Our Team will ensure that stabilization of denuded areas is performed within the required time frames. Most importantly, we will dedicate an erosion and sediment maintenance crew to the Project at all times that can continually monitor the site and relieve over-burdened E&S devices, re-install or reinforce existing devices and prepare for forecasted rain and storm events. This crew will be led by a foreman carrying the VDOT ESCCC and DCR Registered Land Disturber credentials. VDOT Forms C-107a and C-107b as well as proper documentation will be kept current at all times per DCR and VDOT regulations.

Staging and Storage

Our Team understands that a clean, orderly project improves public perception and safety for all involved. As with all of our projects, storage of materials will be isolated to areas where safe delivery access can be provided while ensuring that no material is stored in a location which would introduce a hazard (such as blockage of sight lines) to the traveling public, construction, or inspection staff.

Geotechnical Constraints

Since our Team will complete the required geotechnical investigations and provide methods for remediation of poor soils along the roadway well prior to construction, sequencing of work will be developed to include

any geotechnical constraints/soil remediation to avoid delays in work activities. Considerations such as surcharging, 'undercut and replace', lime or cement soil stabilization and/or use of geo-stabilization grids and fabrics will be identified in the geotechnical recommendations, and construction durations adjusted accordingly so that milestone and completion dates are met. Other constraints, such as unsuitable materials, low CBR value materials, and increased pipe bedding requirements will also be identified in the geotechnical report and completed in conjunction with the appropriate elements and areas of improvement, and are not expected to cause any concerns or impacts to the construction schedule.

4.5.2 TRANSPORTATION MANAGEMENT PLAN

With our Team's constant attention to safety in every facet of design and construction, as well as our experience with multi-phased construction along heavily traveled interstate corridors, we intend to provide a Traffic Management Plan (TMP) and construction program that reduces the Project's anticipated impacts to the traveling public and also exceeds minimum public safety requirements of the RFP. We know that setting the stage for a successful and safe project for the traveling public, construction, inspection, and VDOT project staff) begins with the development of a comprehensive and accurate TMP. As noted in Section 2.10 of the RFP, our Team will prepare a Type C, Category V TMP in accordance with VDOT I&IM 241.5/TE-351 as well as a site-specific Temporary Traffic Control (TTC) plan for each stage of construction.

All aspects of the TMP and TTC plans are developed with a focus on maximizing safety for the traveling public and construction personnel while minimizing travel delays throughout construction. Our plans will place a particularly heavy emphasis on eliminating the need for temporary lane closures to the extent possible, as we recognize the very important distinction that single lane closures on interstates with only two (2) lanes in each direction have particularly high impacts on traffic, as traffic would be restricted to a single lane during these operations. To meet these high safety and mobility standards, the TTC and TMP plan development will be led by our Traffic Engineer, Jerry Mrykalo, who is a Professional Traffic Operations Engineer and certified as a VDOT Work Zone Traffic Control instructor. Additionally, all of our design engineers have completed our in-house Work Zone Traffic Control Training Program and are VDOT certified in the development of TTC and TMP plans. These qualifications and training programs exceed RFP requirements, and allow us to develop TTC and TMP plans that exceed minimum standards. In order to achieve the goals of maximizing safety and minimizing travel delays, as an initial design activity, we will collect updated 24-hour volume information for eastbound and westbound I-64. We recognize that the lane closure restriction times listed Section 2.10.2 of the RFP are to be followed, but we also recognize that the impacts of closing a single lane on I-64 are significantly greater than closing a single lane on a facility with multiple through lanes in each direction and we recognize that constantly changing traffic volumes may now be different than previously collected volumes. By collecting this 2015 current 24-hour traffic volume information, we can utilize it in development of the TMP to allow for construction activities that require lane closures to occur during the hours of lowest volume.

Figure 4.5.1

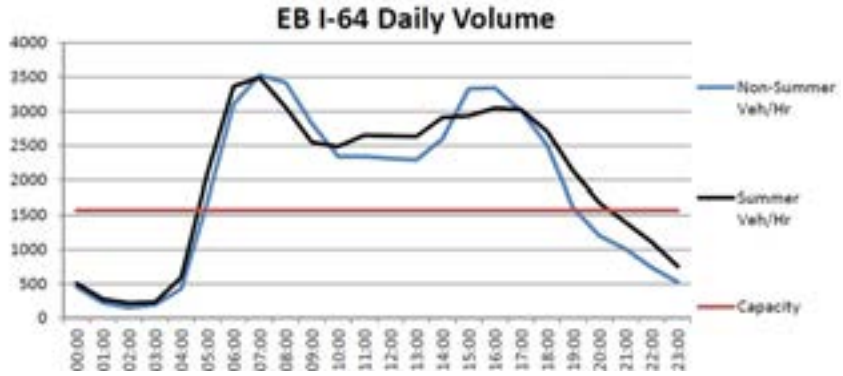

4.5 **Construction of the Project**

Figure 4.5.1 on page 43 shows our 24-hour analysis results from a recent VDOT project along I-64 that we designed, where we verified that overnight lane closures were limited to hours in which the traffic volumes (shown with blue and black lines) were less than the capacity of the remaining open travel lane (shown with red horizontal line). By completing this analysis, we were able to minimize traffic impacts to the public to the fullest extent possible, which has tremendous safety and travel time benefits.

Immediately after beginning the design of the TMP, our Team will begin developing site-specific Temporary Traffic Control (TTC) plans for the Project. The TTC plans will detail every specific element required during construction of the Project. These plans will be developed for each stage of construction to identify barrier and channelization locations, temporary sign locations, PCMS message text and PCMS device locations, construction access points, temporary pavement marking requirements and limits, temporary drainage requirements, areas of temporary and permanent construction, and all other requirements per VDOT's I&IM-241.5. The Virginia Work Area Protection Manual, and the Manual on Uniform Traffic Control Devices (MUTCD).

Given the need for swift police and fire response times, as well as the potential consequences of disabled vehicles blocking travel lanes, our Team will also provide a usable 9' shoulder along I-64 wherever possible to maximize safety and mobility. Also, we understand the importance of evaluating sight distances at all construction entrances and median crossovers to avoid the potentially dangerous condition of devices such as temporary barrier blocking the sight lines of entering and exiting traffic. In addition, Portable Changeable Message Sign (PCMS) device locations and messages will be included in the plans. The careful design of locations meeting sight distance requirements and concise, comprehensible message design by our traffic engineers ensures that these extremely valuable devices are utilized to the maximum benefit without providing confusing or incomplete information. Specific details of our TTC plans, including planned lane and ramp closures are as follows:

I-64

- On I-64, 2 minimum 11' wide travel lanes plus all existing ramp lanes will be maintained in each direction of travel during all stages of construction to maximize safety and large vehicle movements;
- Minimum 1' wide offsets to temporary barrier will be maintained throughout all stages of construction, with a 9' wide right shoulder provided to maximize safety and operations. Where full shoulders are not feasible, pull-off areas will be established for incident management and vehicle breakdown;
- All temporary traffic shifts will be designed to meet the full 70 mph posted speeds on I-64, exceeding the requirements of the Virginia Work Area Protection Manual and the RFP;
- No temporary detours or ramp closures will be proposed;
- No need for flagging operations is anticipated;
- No speed reductions will be proposed for I-64 (see benefit discussion below);
- Temporary lane closures (time of day restrictions) will be in accordance with the lane closure restriction times identified in the RFP documents, or as further identified based on updated traffic counts our Team will complete. Temporary lane closures are anticipated for night time paving, shoulder improvements, placement of traffic barriers, delivery of materials, and bridge work;
- Temporary 20 minute maximum full stoppages on I-64 during overnight hours are only expected for overhead sign work; and
- Outside paved shoulder strengthening will be completed after completion of median widening. This allows this shoulder work to be completed without the need for temporary lane closures, providing a substantial improvement for motorists.

Interchange Ramps

- Minimum 11' wide travel lanes will be maintained;
- Minimum 1' wide shoulders will be maintained on both sides of each interchange ramp, with full paved shoulders provided for incident management and vehicle breakdown wherever possible;
- No temporary detours or ramp closures are anticipated;
- No need for flagging operations is anticipated;
- No speed reductions will be proposed on ramps (see benefit discussion below);
- Any necessary temporary lane closures (time of day restrictions) will be in accordance with the lane closure restriction times identified in the RFP documents, or as further identified based on updated traffic counts our Team will complete; and
- Temporary 20 minute maximum full stoppages on ramps are only expected for overhead sign work.

Fort Eustis Boulevard & Industrial Park Drive

- Traffic will be maintained using minimum 11' wide travel lanes;
- Minimum 1' wide offsets to temporary barrier will be maintained during all stages of construction;
- At least one thru lane in each direction will be maintained on Fort Eustis Blvd and Industrial Park Dr;
- Any necessary temporary traffic shifts will be designed to meet the full posted speeds wherever possible, exceeding the requirements of the Virginia Work Area Protection Manual and the RFP;
- No speed reductions will be proposed;
- No temporary detours will be proposed, and temporary lane closures will be limited to off-peak hours. Flagging operations will only be implemented when absolutely necessary, and are anticipated to occur during off-peak hours and per the requirements of Part 2 of the RFP; and
- Temporary 20 minute maximum full stoppages during overnight hours are only expected for overhead bridge work.

As mentioned above, our Team does not anticipate the need for regulatory speed reductions thru the work zone, as all geometry and lane shifts will be designed to meet standards for the existing posted speeds, and 11' minimum lane widths on I-64 will be maintained throughout construction. Our experience based on similar past projects has found that maintaining existing posted speed limits where geometric conditions permit has multiple benefits. In addition to minimizing motorist delay, research has proven that lowering speed limits where geometric conditions do not require the reduction actually lessen safety, since large deviations between driver's speeds commonly result in increased accidents.

To further enhance our Temporary Traffic Control Plans, our Team will employ site-specific impact management strategies that exceed RFP requirements in order to maximize safety and mobility. For example, full temporary raised pavement markers will supplement lane line pavement markings for increased visibility, especially at night and during wet pavement conditions. Other strategies that will be utilized where warranted include the use of wider than normal lane lines for increased delineation of lane shifts, use of temporary transverse rumble strips to alert motorists of unusual conditions, the use of tighter than required channelizing device spacing for increased work zone delineation and construction personnel safety. In addition to these accident avoidance strategies, our Team will further design and maintain "forgiving" roadside treatments during construction by utilizing temporary concrete barrier for the protection of both the traveling public and construction/inspection personnel.

Public Outreach and Stakeholder Coordination

A significant public outreach campaign is vital to a successful TMP. Our Team, led by Lynn Polizos from Pulsar, Inc., combined with the involvement of and coordination with VDOT, will pro-actively communicate with citizens, businesses (e.g., truckers, travelers/tourists, etc.), community groups, public officials, police, fire and rescue and schools who could be impacted during critical elements of construction. Our staff has extensive experience communicating and conducting community/business outreach on high-impact road construction projects including: I-64/I-264 Pavement Rehabilitation Project, Virginia Megaprojects, I-64 Coliseum Central Project, Middle Ground Blvd Extension Project and the Springfield Interchange. The lessons learned from this extensive experience (borne out by marketing research) include the key insight that the public will give VDOT a great deal of latitude if they are informed in advance of impacts to their commute, ride or neighborhood. This key premise is the basis for all of the community/business outreach and communications.

Public Information and Communications Plan: Our Team will develop the Public Information and Communications Plan (PICP) in accordance with VDOT's and the Hampton Roads District Office's regulations, policies and procedures. At least 90 days before any traffic impacts or mobilization, the Team will deliver the PICP to VDOT for approval. The PICP will include the following elements:

- Background/SWOT Analysis
- Goals and Objectives
- Target Audiences
  - Identification of Key Stakeholders and Influencers
  - Identification of Stakeholder Impacts
- Key Messages
  - Project benefits
  - Project impacts
  - Safety messaging
- Strategies and Tactics
  - Weekly Project Updates
  - Media and Public Relations and identification of methods to coordinate with VDOT's Hampton Roads District Public Affairs Office and the City of Newport News
    - Media Availability Day(s)
    - Weekly project updates to media (through VDOT)
    - Earned media outreach and education (broadcast – TV, radio, digital, print)
  - Community Outreach
    - Community Information Meetings
    - Pardon Our Dust Meetings
    - Local High-Impact or High-Interest Communities Meetings
    - Sponsored Booths at High-Impact Community Events
    - Sign up for regular updates to email distribution
    - Regular posts for VDOT Facebook, Twitter and YouTube feeds
  - VDOT-owned Assets
    - 511
    - Highway Advisory Radio (HAR)
    - Variable Message Signs (existing and project specific)

        - Web video development (utilizing VDOT Central Office's Videographer to reduce cost)
    - Advertising
        - Out-of-home (transit, gas pump toppers, billboards)
        - Radio
        - Television
        - Social/digital (website, targeted banner ads, Search Engine Marketing [Google AdWords], social media [Facebook Ads], etc.)
        - Project posters/signage (in corridor, at Virginia Rest Areas, in community locations, etc.)
        - Direct mail
    - Website update
        - Develop project website in accordance with VDOT template
        - Provide monthly updates including photos
        - Regular updates
- Crisis Communications/Risk Management Plan
    - Training/Implementation
    - Crisis levels
    - Evaluation strategies
    - Key contacts with contact information
    - Media relations/Spokesperson(s)
    - Follow-up and reporting
        - Measurement
        - Timeline (in alignment with TMP timing)

In addition, the PICP will address procedures for advance notification/communication prior to any significant work activity or temporary lane closures to help reduce congestion and delays through the Project site. This will be communicated through our comprehensive public education and outreach campaign, as detailed in the PICP.

Paid Advertising: VDOT and Pulsar have a long history of utilizing community outreach and earned media to inform and educate the public about many large-scale transportation improvement projects. But, VDOT's own marketing research has shown that the public not only desires, they expect VDOT and its contractors to inform and educate them in advance of the impacts of projects. We will take best practices from our current I-64 project and will work with VDOT on this Project to develop a targeted and effective earned media as well as paid advertising program with the intent of engaging and informing the maximum amount of travelers.

As noted above, there are several Project Stakeholders who may be impacted at various times during construction. Identification of these stakeholders in advance of construction activities will help to identify mitigation strategies for any temporary impacts. Provided below is a sample of Project Stakeholders adjacent to the Project and how they may be impacted during construction:

Police, Fire & Rescue: We do not anticipate any measurable impacts to fire and rescue or police service or response, as all existing roadways and ramps will remain open at all times. Coordination will be required with the fire and rescue staff to provide advance notification of temporary lane restrictions, roadway closures and traffic shifts between stages. This coordination will include Station #4 (Jefferson Ave) and

Station #6 (Oyster Point Rd) of the Newport News Fire Department. Coordination with Newport News Police and Virginia State Police will be required for all temporary lane closures.

Schools: Coordination with the following school organizations will be necessary since their school boundaries encompass the Project site, and their bus routes travel on Fort Eustis Boulevard:

- Dozier Middle School (Industrial Park Drive)
- Denbigh Early Childhood Center (Warwick Boulevard)
- Peninsula Vocational Technical North School (Woodside Lane)
- Woodside High (Woodside Lane)
- Greenwood Elementary (Woodside Lane)

Although impacts are expected to be minimal as our Team will not implement lane closures during typical school bus hours, comprehensive coordination efforts will be undertaken with each of these school organizations to make them aware of temporary construction impacts.

Traveling Public: The maintenance of all travel lanes and ramps throughout construction will limit impacts to the traveling public. In addition, our optimization of the temporary lane closure hours will be limited to off-peak hours, further reducing these impacts. Keeping all work behind barriers and maximizing lane widths will also help limit delays associated with temporary lane configurations during peak hours. The utilization of broad reach communications strategies (e.g., billboards, signage and radio) will communicate to travelers and tourists through the corridor.

Local Residences: Homeowners and local businesses immediately adjacent to I-64 will be impacted temporarily with added construction noise and clearing, grading and construction activities close to their properties. Impacts will be minimized as much as possible, and where possible the early installation of noise barriers will provide more immediate relief of both construction and traffic noise. The Public Relations Manager will make it a priority to engage and communicate with the impacted residences, neighborhoods and businesses in advance of construction plans and impacts.

The City of Newport News: It will be incumbent upon our Team to keep the City of Newport News informed on Project issues and progress. Although no significant impacts to the city are anticipated, our Team will establish regular lines of communications with the city. In addition, constant communication will be maintained with VDOT public relations staff, the City of Newport News, and with those involved in design and construction of adjacent I-64 projects.

Our Team is adamant about providing and maintaining a safe work zone, and we also always look for ways to improve traffic patterns not only after construction, but also during construction. On several of our recent projects, we implemented interim improvements aimed solely at improving traffic flow during construction. On this Project, we have already started on the “right foot” by introducing significant enhancements to the Project that exceed the requirements of the RFP such as completing the new inside travel lanes early, sequencing of construction and roadway alignment adjustments to provide safety and mobility benefits to the traveling public. We look forward to designing and constructing this project for VDOT, the local stakeholders, and interested parties, and to another successful design-build project with VDOT.

4.6 - Disadvantaged Business Enterprises

4.6 - Disadvantaged Business Enterprises

4.6 Disadvantaged Business Enterprises

Commitment to Achieving the DBE Goal

Shirley Contracting Company, LLC (Shirley) is committed to achieving the 12% DBE participation goal for the Project for the entire value of the contract.

The Shirley Plan to Meet DBE Subcontracting Goal

The Shirley Team currently includes the following DBE firms: Diversified Property Services, Inc., GeoConcepts Engineering, and Quinn Consulting Services, Inc. These firms are highly respected and have worked with the Shirley Team on multiple VDOT Design-Build projects.

Concurrent with the preparation of this Technical Proposal and as part of the Price Proposal, we will solicit firm pricing for the work from other potential DBE subcontractors and vendors. The following outlines the steps that we will take to meet this requirement:

- We will examine the Project, nature of the work, and our internal company DBE database to determine where we believe the opportunities for DBE participation will be available. We will then take the necessary steps to ensure that we communicate with and provide adequate notice of the Project opportunities to the DBE community.
- We will contact DBE firms in our database to inform them of the opportunity. We will include in an e-mail solicitation the scope of the Project, the construction trades we believe will be able to provide subcontracting opportunities, and notice that plans are available for viewing.
- We will continue to make follow-up telephone calls to these firms as a means of determining actual interest in the Project.
- We will post the opportunity on our company website to reach a broader spectrum of contractors, vendors and other potential interested persons.
- We will also solicit interest in the Project by placing ads in a local newspaper and other media outlets identifying the Project and the potential opportunity to supply materials and services.
- Throughout the development and preparation of our Technical and Price Proposals for the Project, we will track and maintain the status of our expected DBE participation. We are immediately and constantly aware of the need to solicit increased participation from the DBE community in order to meet the goal. We plan to exceed the stated DBE goal for the Project.

Throughout the design and construction phases of the Project, we will continually monitor the status of our Team's DBE participation. The Design-Build Project Manager will be responsible for this task, and will develop a method to do so that will be shared with VDOT on a regular basis.

4.7 - Proposal Schedule

4.7 Proposal Schedule

4.7.1 Proposal Schedule

The Shirley Team's Preliminary Proposal Schedule is provided at the end of the Proposal Schedule Narrative.

4.7.2 Proposal Schedule Narrative

Shirley has provided a Preliminary Schedule identifying our plan for all phases of the design-build process based on the following project Milestones listed in Table 4.7.1. As we have noted in our Technical Proposal, it is our intent to deliver the Project by the Completion Date of December 1 , 2017, with the added benefit of opening the new inside travel lanes by September 13, 2017.

Table 4.7.1

Milestone	Date
Notice of Intent to Award Date	January 20, 2015
Commonwealth Transportation Board Approval	February 18, 2015
Design-Build Contract Execution	February 27, 2015
Notice to Proceed Date	March 18, 2015
Begin Phase 1 Construction	October 30, 2015
Property Rights Acquired Area 2	March 4, 2016
Final Plan and Permitting Approval	March 14, 2016
Begin Phase 2 Construction	March 21, 2016
Begin Phase 3 Construction	January 17, 2017
Open New Inside Travel Lanes to Traffic	September 13, 2017
Begin Phase 4 Construction	September 22, 2017
Project Ready for VDOT Walk-through	October 28, 2017
Final Date Completion Date	December 1, 2017

Work Breakdown Structure

In order to deliver the Project on-time, our Team has developed a detailed Preliminary Proposal Schedule in accordance with the RFP requirements. The Team has organized the schedule into a hierarchical Work Breakdown Structure (WBS) in order to demonstrate the relationships and activity durations amongst the design, environmental permitting, public involvement, right-of-way acquisition, utility relocation, and construction disciplines. This is shown as our Level 1 Work Breakdown Structure. All elements of the design-build process are captured under these Level 1 tasks and are briefly described below:

01. Project Milestones: Area reserved for easy review of the project status.

02. Design: Includes preliminary engineering services, plan development, design QA/QC reviews, submittal milestones, and VDOT reviews and approvals of plans. This section includes a second level WBS structure to group design activities by type of design submission including roadway and bridge. For this Project we have also added a second level WBS group to this area to track activities required for coordination with CSX during design development and construction submittals.

03. Public Involvement: This section of the schedule includes activities and milestones for developing the planned public involvement process including communication plans, public information meetings, and updates to the Office of Public Affairs for major traffic shifts and the VDOT website.

04. Environmental Permitting: Includes wetland and stream delineations, jurisdictional determinations, permit management and preparation, mitigation, and permit submissions and reviews from the authorities having jurisdiction.

05. Right-of-way Acquisition: The acquisition of property rights will be required to obtain permanent right-of-way as well as permanent and temporary construction and utility easements. The right-of-way required will impact the construction of the proposed Stormwater Management and Bio-Retention Basins as well as the proposed Noise Walls. This section of the schedule is grouped by Construction Area to identify impacts as construction progress dictates.

06. Utility Relocations: Includes activities for UFI meetings, preparation of preliminary engineering (PE) estimates, approval of PE estimates, utility relocation design by the utility owner, approval of the utility design, and utility relocation construction. The utility relocations are separated into second level WBS groups based on utility owner.

07. Construction: Includes all components of roadway and bridge construction including the Quality Assurance and Quality Control processes required throughout construction. The Construction section of the schedule is segmented by additional levels of WBS structure to divide the construction activities into phases of work, areas of work, and major portions of work such as bridge or box culvert activities. This grouping of work packages has proven to allow for easy and clear tracking of activity progress to ensure on-time completion.

Table 4.7.2 shown below is a complete outline of the WBS Structure for the Project:

Table 4.7.2

WBS Code	WBS Description
I-64 Capacity Improvements Project	Contract: C00104905DB75 I-64 Capacity Improvements Segment I
I-64 CAPACITY IMPROV.PROJECT.A	SCHEDULE MILESTONES
I-64 CAPACITY IMPROV.PROJECT.B.A	PRELIMINARY DESIGN WORK
I-64 CAPACITY IMPROV.PROJECT.B.B	ROADWAY DESIGN
I-64 CAPACITY IMPROV.PROJECT.B.C	BRIDGE DESIGN
I-64 CAPACITY IMPROV.PROJECT.B.D	CSX COORDINATION
I-64 CAPACITY IMPROV.PROJECT.C	PUBLIC INVOLVEMENT
I-64 CAPACITY IMPROV.PROJECT.D	ENVIRONMENTAL PERMITTING
I-64 CAPACITY IMPROV.PROJECT.E.1	ACQUISITION PLAN AND SETTLEMENTS
I-64 CAPACITY IMPROV.PROJECT.E.2	AREA 2 ROW ACQUISITIONS - 1585+00 to 1688+00 (10,300 LF)
I-64 CAPACITY IMPROV.PROJECT.E.3	AREA 1 ROW ACQUISITIONS - 1501+23 to 1585+00 (8,377 LF)
I-64 CAPACITY IMPROV.PROJECT.E.4	AREA 3 ROW ACQUISITIONS - 1688+00 to 1782+40 (9,440 LF)
I-64 CAPACITY IMPROV.PROJECT.F.A	DOMINION VIRGINIA POWER OVERHEAD/UNDERGROUND
I-64 CAPACITY IMPROV.PROJECT.F.B	NEWPORT NEWS WATER
I-64 CAPACITY IMPROV.PROJECT.H.1	PRE-CONSTRUCTION, SUBMITTALS and MATERIAL PROCUREMENT
I-64 CAPACITY IMPROV.PROJECT.H.1.A	QUALITY ASSURANCE / QUALITY CONTROL PROCESS
I-64 CAPACITY IMPROV.PROJECT.H.2.B	I-64 WESTBOUND
I-64 CAPACITY IMPROV.PROJECT.H.3.A.1	AREA 1 - I-64 EASTBOUND and WESTBOUND INSIDE WIDENING

WBS Code	WBS Description
I-64 CAPACITY IMPROV.PROJECT.H.3.A.2	STAGE 1 BRIDGES B-620 & B-621 over LEE HALL RESERVOIR
I-64 CAPACITY IMPROV.PROJECT.H.3.B.1	AREA 2 - I-64 EASTBOUND and WESTBOUND INSIDE WIDENING
I-64 CAPACITY IMPROV.PROJECT.H.3.B.2	STAGE 1 BRIDGES B-618 & B-619 over FORT EUSTIS BLVD
I-64 CAPACITY IMPROV.PROJECT.H.3.B.3	STAGE 1 BRIDGES B-616 & B-617 over INDUSTRIAL PARK DR/CSX
I-64 CAPACITY IMPROV.PROJECT.H.3.C.1	AREA 3 - I-64 EASTBOUND and WESTBOUND INSIDE WIDENING
I-64 CAPACITY IMPROV.PROJECT.H.3.C.2	TRIPLE BOX CULVERT D-601 / D-602 (STA 1742+04)
I-64 CAPACITY IMPROV.PROJECT.H.4.1	STAGE 2 BRIDGES B-620 & B-621 over LEE HALL RESERVOIR
I-64 CAPACITY IMPROV.PROJECT.H.4.2	STAGE 2 BRIDGES B-618 & B-619 over FORT EUSTIS BLVD
I-64 CAPACITY IMPROV.PROJECT.H.4.3	STAGE 2 BRIDGES B-616 & B-617 over INDUSTRIAL PARK DR/CSX
I-64 CAPACITY IMPROV.PROJECT.H.4.4.1	NOISEWALL #46 - I-64 WB 2611+00 to 2652+00 (4,100 LF)
I-64 CAPACITY IMPROV.PROJECT.H.4.4.2	NOISEWALL #47/48 - I-64 WB 2684+00 to 2755+15 (7,115 LF)
I-64 CAPACITY IMPROV.PROJECT.H.4.5	PHASE 3 - I-64 EASTBOUND & WESTBOUND CONCRETE PAVEMENT REPAIRS
I-64 CAPACITY IMPROV.PROJECT.H.4.6.1	EASTBOUND SHOULDERS FT EUSTIS to EASTERN TERMINUS of PROJECT
I-64 CAPACITY IMPROV.PROJECT.H.4.6.2	WESTBOUND SHOULDERS FT EUSTIS to EASTERN TERMINUS of PROJECT
I-64 CAPACITY IMPROV.PROJECT.H.5	PHASE 4 - FINAL THMACO OVERLAY and OPEN LANES
I-64 CAPACITY IMPROV.PROJECT.H.6	OPTION 1 - ADDITIONAL PAVEMENT OVERLAY
I-64 CAPACITY IMPROV.PROJECT.H.7	OPTION 2 - ADDITIONAL ROADWAY EXPANSION to FORT EUSTIS RAMPS

The following is a description of the calendars used for this Project.

Global Calendar: All calendars are based on 8 hour work days and include the following holidays: New Year's Day, Memorial Day, 4th of July, Labor Day, Thanksgiving, the day after Thanksgiving, and Christmas.
Calendar 1: "5-Day Workweek" – This calendar is based on five working days per week and is used for all design, administrative, as well as the majority of construction activities.
Calendar 2: "7-Day Calendar" – Assigned to activities that have durations based on calendar days instead of work days. For example VDOT's 21 calendar day review duration.
Calendar 3: "5-Day Winter Imp" – This calendar is based on working part-time from December 25 to March 10. It is assigned to activities that are anticipated to have reduced productivity during the winter months, such as placement of cement treated aggregates or bridge deck construction.
Calendar 4: "Winter Shutdown Calendar" - Assigned to activities that are unable to be performed during mid-December through mid-March due to cold weather. Activities such as bridge overlay work and surface asphalt are included.

Schedule Timing and Critical Path

The narrative below describes our Team's planned schedule and sequence of operations grouped by the Level 1 WBS Project disciplines of design, environmental permitting, public involvement, right-of-way acquisition, utility relocation, and construction. The sequencing of all disciplines was developed by considering the construction phasing of operations and determining the longest path to project completion with all factors considered including manpower, subcontractors, materials, design and environmental constraints and most importantly public safety and safety of the workforce. The Project phasing was

developed based upon our maintenance of traffic and sequencing shown in our Volume II Design Concept Plans. Additionally, due to the long linear nature of the Project, we divided the Project into three distinct areas of work that can be tracked and managed by dedicated supervision during construction. These areas translate into roughly one-third size segments and are as follows:

- AREA 1 - Station 1501+23 to Station 1585+00 (8,377 LF)
- AREA 2 - Station 1585+00 to Station 1688+00 (10,300 LF)
- AREA 3 - Station 1688+00 to Station 1782+40 (9,440 LF)

Design of the Project

This section of the schedule includes those activities necessary for preliminary and final roadway and bridge design and engineering plan preparation and approvals. It includes time for the necessary Design Quality Assurance/Quality Control reviews at multiple stages of the design process. As specified in the RFP we have included a 21-calendar day activity for VDOT review after each submission. The design phase also includes non-critical activities for the completion of surveys, utility designations, test pits, H&HA studies, utility relocation plans, and geotechnical investigations, including a 60-calendar day activity for VDOT's review of the geotechnical report prior to submission of the final roadway and bridge plans.

Additionally, we have added a second level WBS group to track activities required for coordination with CSX during design development and construction submittals. This includes three rounds of bridge design review for Bridges B-616 and B-617 over Industrial Park Drive and CSX. Our bridge plans differ from the RFP Concept drawings by eliminating the existing and future pier and shifting abutment B of the bridges outside of the CSX right-of-way. CSX Right of Entry will still be required during demolition and construction of the new bridges and CSX will require review and approvals of all plans in order to gain entry. Further, as construction progresses, all demolition, lifting, and work plans will require CSX review and approval prior to commencement. We have allowed time for CSX to advertise the Flagman position and time for his arrival on site by April 2016 for demolition activities to start.

Our Team will begin the design phase of the Project immediately upon execution of the design-build Contract. The first formal plan submission will occur within 4 months of the March 18, 2015 Notice to Proceed (NTP) date and will include the first submission of roadway and bridge plans. The Preliminary Schedule reflects final approval of all roadway and bridge plans by November 29, 2015.

Critical Path activities in the design phase of the Preliminary Proposal Schedule include the base mapping and surveys necessary to start the design process. Preparation, reviews, and approvals of the first submission of the roadway design plans as well as the tasks related to the Preliminary, First and Final submissions of the bridge design plans.

Public Involvement

The public involvement schedule includes submitting our emergency contact list upon NTP, developing our Public Information and Communication Plan (PICP) and among other things, holding Public Information Meetings in incremental stages during construction. This includes providing regular updates to VDOT and the Hampton Roads District Office throughout the entire design-build process. The schedule includes the major milestone activities for Public Information Meetings and major traffic changes. However, there are

many other public information and communication plan activities that our Public Relations Team, under the leadership of Pulsar Advertising, Inc., will perform throughout the Project. These include holding meetings with local businesses and attending meetings with homeowners associations, local government representatives, and community groups. We will also provide information for regular updates on weekly lane closure plans on VDOT's Project website. A significant public outreach campaign is vital to the success of the Project. Our Team is committed to successfully implementing a Public Outreach Program which will minimize impacts to the local community and travelers in the corridor.

Environmental Permitting

Environmental Permitting will begin at NTP with gaining access to affected property owners along the Project's corridor to begin the required Phase I environmental surveys. Our Team will immediately perform wetland delineations, obtain jurisdictional determinations and prepare the Joint Wetlands and Water Permit Application. Following completion and acceptance of the 60% roadway and bridge plans we will submit the necessary Permit Applications to the authorities having jurisdiction. We anticipate that the Individual Permit for USACE as well as the Virginia Water Protection Permit #3 from DEQ will require a 4 to 6 month approval time frame. Our Team will also complete the requisite VDOT stormwater forms (LD-445 series), and will provide Stormwater Pollution Prevention Plans (SWPPP) and related information for inclusion on the VDOT SWPPP General Information sheets. The LD 445/VSMP permit will be acquired by October 4, 2015 with the completion of all permitting by March 14, 2016.

Critical Path activities in the Environmental Permitting Phase of the CPM Schedule include the preparation and approvals of the USACE Individual Permit and the Virginia Water Protection Permit #3 from DEQ. These permits will allow construction grading and disturbance activities to begin by March 14, 2016.

Right-of-Way Acquisition

The acquisition of property rights will be required to obtain permanent right-of-way as well as permanent and temporary construction and utility easements. The right-of-way required will impact the construction of the proposed Stormwater Management and Bio-Retention Basins. Additionally, utility easements may be required for adjustment of utilities along the proposed Noise Barrier alignment shown on the Volume II Concept Plans. We have grouped this section of the schedule by our designated construction areas to easily identify the progress of the property rights acquisitions and any impacts they may have to the start of construction activities. Our Team is very familiar with the right-of-way process and as shown on the Proposal Schedule, we have detailed the historical average timeframes that we anticipate for acquisition of property rights either by agreed negotiation or by certificate of take. We do not anticipate that the property rights will become critical on this Project, but we will dedicate the necessary resources to assure that schedule dates are adhered to.

Utility Relocations

Table 4.4.1 in Section 4.4 of our Technical Proposal lists the anticipated utility relocations and potential conflicts for the Project. To simplify and track the utility relocations, we have created a work breakdown structure that groups the utility relocation activities by utility owner and Project location. This further allows us to coordinate the work with utility relocations using the construction sequencing. Within each utility owner group, we have included activities for holding the Utility Field Investigation (UFI) meeting,

preparation of the Preliminary Engineering (PE) estimates by the utility owner, approval of the PE estimate, design of the utility relocation, and construction of the relocation by area. The utility relocation schedule starts with formal UFI meetings held in Summer 2015 following completion of all utility test pits and progression of design documents to roughly 60%. This will enable our Team to confirm and adjust our list of utility conflicts based on the field test pit data prior to holding the formal UFI meeting. We will continue this early coordination of utilities throughout the design phase of the Project to ensure that the right-of-way and roadway plans are coordinated with the utility relocation plans. Currently, we are projecting that only Dominion Virginia Power and Newport News Water will require field relocation or protection during construction. These dates are identified in our Proposal Schedule and linked to the appropriate construction activities

Construction Sequence

Pre-Construction, Submittals and Material Procurement

In this section of the schedule, we have identified early construction activities such as survey, submittals, major material procurement, and production of shop drawings and fabrication of critical items such as Structural Steel, Precast Bulb-Tee Girders, and Overhead Signs. In a separate WBS group we have identified the major critical QA/QC Preparatory Meetings (Hold Points) that will be required prior to commencing with construction activities. The overall Level of Effort for the QA/QC process is represented by a bar spanning all construction activities until final punch-out of the Project.

Phase 1 - Lane Shifts and Shoulder Strengthening at Bridges

Since all Phase 1 work for the Project is contained within existing VDOT right-of-way and will require no drainage adjustments, upon approval of the second submission roadway design documents, our construction team's will begin the lane shifts and shoulder strengthening along the I-64 corridor in Fall 2015. We have done this on many of our design-build projects with VDOT having great success while maximizing the opportunities for early completion. This will allow the lanes shifts to be complete when permitting and final plan approval is obtained in early 2016.

To allow room for the placement of temporary traffic barrier service along the median widening, the existing I-64 eastbound and westbound travel lanes must be shifted several feet to the outside. This will be accomplished by eradicating existing pavement markings and placing temporary pavement markings creating two 11' travel lanes shifted to the outside or right of the median. Our current plan would not require the existing outside travel lanes to be strengthened for the majority of the Project as the vehicle wheel path would not be traveling on the right shoulder. However, at each bridge location along the alignment, existing traffic will be required to shift further to the right traveling on the entirety of the existing right shoulder as traffic tapers to the right and then away following traversing of the bridge. In these cases, it is anticipated that the existing right shoulder would require strengthening by milling out the required width for the shifting of traffic and placement of temporary pavement. All work will be completed during nighttime operations utilizing temporary single lane closures adjacent to the work. During milling and paving operations, at no time will a full depth milled section be opened to traffic without the paving being completed within 2" of the existing pavement surface. Temporary pavement markings and markers will be placed on the new alignment to maintain 11' travel lanes and a 1' buffer to the temporary concrete barrier, which will be placed adjacent to the median widening work, which will be completed in Phase 2.

Phase 2 - I-64 New Inside Lanes and First Phase of Bridges

Once our Team shifts traffic as noted at the end of Phase 1 above, construction of the majority of the Project elements will begin. Specifically, Phase 2 consists of all of the I-64 median widening, drainage improvements, stormwater management improvements, and bridge construction.

Area 2 - Station 1585+00 to Station 1688+00

Grading, excavation and drainage crews will begin construction in Area 2 in order to gain access to Bridges B-616 and B-617 over Industrial Park Drive and CSX. The start of these bridges and demolition activities are on the Critical Path of our construction sequence. Drainage work in Area 2 includes jacked and bored pipe crossings of the existing I-64 travel lanes as well as construction of the required stormwater management basins and bio-retention facilities located on the outside of the travel lanes. All work will be coordinated in order to eliminate placement of traffic barrier along both sides of the travel lanes. Foundations located on the median side of the highway for the new overhead signs and message boards will be constructed in this phase of construction and in all subsequent areas described below. In all areas, we have allowed time in our excavation activities to account for the remediation or removal and replacement of soft or unsuitable soils. Aggregate and paving operations are intended to finish in early 2017 as is the Stage 1 bridge work at Bridges B-616 and B-617.

Also included in the Area 2 limits is the partial demolition and widening of the Bridges B-618 and B-619 over Fort Eustis Boulevard. Our Team intends to bring an additional bridge crew in mid 2016 to start the demolition of this structure. Some resources between the construction of the two sets of bridges (B-616/B-617 & B-618/B-619) will be shared in order to complete all of the Phase 2 - Area 2 work by February 2017.

Critical Path activities in Phase 2 Area 2 include the entire construction; both substructure and superstructure phases of Bridges B-616 and B-617 over Industrial Park Drive and CSX as well as the construction of the new inside widening lane and shoulder on I-64 eastbound and westbound.

Area 1 - Station 1501+23 to Station 1585+00

As clearing and bulk grading activities are complete in Area 2, traffic barriers will be placed at Area 1 at the western third of the Project. The median widenings in this Area have been scheduled very similarly to the Area 2 work described above. Grading and Drainage crews completing work in Area 2 will transition to Area 1 opening work to begin on Bridges B-620 and B-621 over Lee Hall Reservoir. A third bridge crew will mobilize to the site to start the partial demolition of the B-620/B-621 parapet and outer deck segments for the required widenings. It is anticipated that Phase 2 - Area 1 will be complete by March 2017.

Area 3 - Station 1688+00 to Station 1782+40

In late April 2016, our Team will mobilize to begin work in Area 3 of the Project at the eastern end of the corridor. Again, similarly to Areas 2 and 1, work will be sequenced amongst the grading drainage and paving operations. Additionally, the connection of the existing triple box culverts in the median at station 1742+04 will be constructed. Since the majority of the noise walls on the Project are in Area 3 along the westbound lanes of I-64, our Team will explore the option of advancing the construction of those walls located near the northern edge of the right-of-way where there are no traffic concerns with the concurrent work in the medians. Construction in Phase 2 - Area 3 will be complete by May 2017.

Phase 3 - Stage 2 of Bridges, Noise Walls, and Pavement Repairs

Following completion of the Phase 2 Areas, travel lanes will be shifted to the newly constructed inside travel lane and existing left lane. On the right side, we anticipate that Group II Drums can be placed to keep traffic in the two open travel lanes. This arrangement will provide increased safety for removal of disabled vehicles, as well as to eliminate the concerns with speed reductions adjacent to temporary traffic barriers. We will utilize nighttime closures to perform the necessary pavement rehabilitation identified in Part 2, section 2.6.2 of the RFP documents. This work is staged in accordance with the individual Areas becoming available in March 2017 and continuing into August 2017.

At each bridge pair location, traffic will be required to shift slightly more to the inside in order to make room for the next phase of bridge construction. In this portion of the schedule, all Stage 2 construction of Bridges B-620 and B-621 over Lee Hall Reservoir and Bridges B-618 and B-619 over Fort Eustis Boulevard are sequenced. The bridge deck joints will be reconstructed and abutments will be converted to integral backwalls to create 'jointless' structures in accordance with the RFP requirements. Finally, the decks will be milled and overlaid to create a new riding surface. All substructure repairs will be made in accordance with the bridge designer recommendations and RFP requirements. The work required for the Stage 2 construction of these bridges is scheduled for completion by late June 2017.

In the case of Bridges B-616 and B-617 over Industrial Park Drive and CSX, our Team will be completely demolishing the remaining existing structure and replacing the existing 4 span bridge with a new 2 span structure. This will require a slightly further shift of traffic to the inside to allow room for the next phase of bridge construction. In this case, we will utilize the newly constructed full-depth left shoulder to temporarily run traffic on while the next phase of bridge construction ensues. The dedicated bridge crew in Stage I will continue in Stage 2 of these bridges with construction beginning in January 2017 and completing in late August 2017.

During Phase 3, work on the outside of the I-64 travel lanes will also occur to include construction of the required noise barrier walls. Crews will begin the majority of the construction of the noise barriers in early 2017 with activities scheduled to complete in October 2017. Our Team is exploring the option of placing some portions of the noise walls adjacent to the I-64 roadway as suggested by the RFP documents. In these areas, it may be necessary to shift traffic on I-64 mainline following Phase 2 of construction to the new inside shoulder and left travel lane to safely create additional construction room for noise wall construction. This configuration would allow noise walls to be constructed with greater effectiveness for noise mitigation and eliminate impacts to the existing forestation and landscaping along and adjacent to the I-64 right-of-way.

Following noise wall construction in Phase 3, milling and paving crews will commence with the required outside shoulder strengthening from the Fort Eustis Interchange to the eastern end of the Project. This work will be performed by removing the required six inches of existing material via use of a milling operation. The in-situ material will then be compacted in place. Immediately following compaction, the required base asphalt paving will be installed. This operation will be performed without lane closures; however, operations will be planned so that no drop-offs greater than two inches are remaining at the end of the shift. The intermediate asphalt lift will be placed within days of the base lift to keep the drop offs to a minimum and so that any required guardrail repairs to the outside shoulder can occur prior to the start of final paving in Phase 4.

Additionally, installation of the ITS infrastructure and system requirements as well as the outside foundations for the new overhead sign structures will be constructed and erected in this phase with new ground mounted signs also being installed.

If Option 2 of the RFP is chosen, then the improvements to the Fort Eustis Interchange acceleration and deceleration lanes will be constructed in Phase 3. Temporary traffic barrier service will be utilized to protect workers and the traveling public. Since the existing right travel lane will not be functioning in Phase 3, this allows room for placement of barriers to create the pavement tie-ins necessary to construct the ramp improvements at the interchange. At the end of Phase 3, all MOT devices will be removed with the benefit of opening the new inside travel lanes to traffic by September 13, 2017. The lanes can remain open for their intended purpose while final paving is performed during allowable closure periods.

Critical Path activities in Phase 3 of the Project include the construction of Stage 2 of Bridges B-616 and B-617 over Industrial Park Drive and CSX. Concurrently, a secondary Critical Path runs through the construction of the Noise Walls #46, #47, and #48.

Phase 4

Stage 4 work will consist of placement of all final surface asphalt material. In the case of the Base Contract, this includes a 0.75” application of a thin hot mix asphalt concrete overlay (THMACO) to the existing and new travel lanes and shoulders. Due to the multiple pavement shifts during construction, placement of surface asphalt at the end of all construction will ensure that temporary pavement markings are not used on the finished product, and ensure that all final paving is completed at the same time. This will provide for a smooth, “clean” look at the completion of the Project when all of the through lanes are opened to traffic on a permanent basis. The placement of the THMACO overlay is the final construction activity on the Critical Path of the schedule.

If Option 1 is selected, then the additional 2” of SMA - 12.5 Asphalt would be placed in this Phase. Any necessary guardrail upgrades or adjustments would be performed prior to opening of traffic to the new pavement.

Project Controls

Through our Team’s experience delivering major design-build roadway projects ahead of schedule, the Shirley Team has developed scheduling protocols to govern the development, implementation, progress tracking, and recovery of the CPM schedule through all of the Project phases. These methods have proven effective as evidenced by the fact that every design-build project completed by our Team has finished either on time or ahead of schedule.

Schedule Development

For any design-build project, it is imperative that the Project Team develop a detailed CPM Schedule that considers the interrelationships between all of the design-build disciplines. This is especially important on a project with right-of-way and utility impacts that must be integrated into the design and construction sequencing. Our Team has developed the Preliminary Proposal Schedule included at the end of this section with a Work Breakdown Structure (WBS) that clearly delineates the tasks of each discipline manager, including design, permitting, right-of-way, utilities, and construction.

4.7 **Proposal Schedule**

In order to develop the overall detailed CPM Schedule, each discipline manager will be responsible for producing a schedule to govern his own work and providing insight into how his schedule activities affect and are affected by activities in other disciplines. Once each manager has prepared their individual schedule, we will hold schedule development meetings run by the Design-Build Project Manager and attended by all discipline managers to review the individual schedules and integrate them into the overall CPM Schedule. These meetings ensure that:

- The work packages within each discipline are comprehensive enough to define the work with no activities omitted;
- The work packages are integrated within each discipline and between disciplines to generate a clearly defined project Critical Path, confirm that the Critical Path makes sense, and that the schedule shows that the Project will complete on-time or ahead of schedule;
- Each discipline manager understands the schedules of the other disciplines and how their work inter-relates with the other disciplines;
- Each discipline manager understands how his work affects the Critical Path of the Project and the priorities of the Design-Build Project Manager and the other discipline managers; and
- The schedule meets or exceeds the requirements of the Contract.

These meetings will enable the Shirley Team to create a detailed CPM Schedule that has been jointly prepared by and agreed to by all of the discipline managers, providing realistic expectations of the schedule of work to be completed by all team members and third parties.

Throughout the design phase of the Project, as more detailed plans are developed and utility conflicts are verified through test pitting, these meetings will continue to further develop the CPM Schedule into the more detailed Baseline CPM Schedule. This schedule can then be utilized by all Team members to plan and track the progress of their work. It will be submitted to VDOT for review and approval and utilized during the planning phases for utilities, permitting, right-of-way, design, and subcontractor/ supplier scope and purchasing. Specific milestone dates from the CPM schedule will be written into subcontracts and purchase orders, making them contractually responsible for meeting schedule deadlines.

Procedures for Monitoring and Reporting Schedule Progress to Ensure Timely Project Completion

The key to effectively monitoring schedule progress is maintaining efficient communication between the discipline managers, resulting in constant coordination and schedule feedback. From the NTP date through the completion of design activities, our Team at a minimum will hold weekly Design Coordination Meetings which are run by the Design-Build Project Manager and attended by all discipline managers. Design Coordination Meetings have been a crucial tool on other design-build projects by facilitating face-to-face communication between the discipline managers. For each Design Coordination Meeting, the Design-Build Project Manager will review the CPM Schedule and identify all activities that were scheduled for completion the previous week or are planned for the next two weeks. During the meeting the Project Team discusses the status of progress since the last meeting with actual dates for completed activities; critical completion dates for future activities; the addition or deletion of schedule activities as the design evolves (for example the identification of a new utility impact or the ability to design around a planned utility relocation); the impact of revised schedule dates on other activities and disciplines;

identification of ways to advance the schedule ahead of the planned completion or mitigate schedule delays; and general design review, constructability, and determination of means and methods.

After each weekly meeting, the Design-Build Project Manager will update the CPM schedule and forward copies of an updated "look-ahead" schedule to each of the discipline managers identifying the critical dates agreed to during the weekly design meeting. This process continues throughout the design, permitting, and right-of-way phases to ensure there is no slippage to the start of the utility relocation and construction phases of the Project.

During the utility relocation and construction phases of the Project, the Design-Build Project Manager, Construction Manager, Designer Manager, QA Manager, QC Manager, and VDOT will continue to meet weekly for a Construction Progress Meeting to coordinate necessary QA, QC, Independent Assurance (IA) and Independent Verification (IV) inspections. At each meeting, the Construction Manager will review the work performed during the previous week and outline the schedule activities that will be performed during the following two weeks.

An additional technique that Shirley uses to monitor construction progress is the "Daily Shift Cost Report" (DSCR). At the end of each day, the construction field personnel compare the quantity of work, and the cost to do so, completed that day with the budgeted production and cost. Not only does this analysis provide an early indicator of cost concerns, but it also instantly highlights potential issues with the schedule by focusing on production rates. Completing and reviewing the DSCR's allows the construction team to make immediate "real-time" adjustments to work crews, equipment, trucking, subcontractor resources, and material deliveries to adjust production rates in order to maintain the Project schedule. Our Team will also review and adjust the durations of future schedule activities based on the DSCR production rates to help identify and mitigate schedule concerns for the later phases of the Project.

In addition to weekly schedule meetings with the VDOT, our Team will also prepare and submit monthly schedule updates for review and approval by VDOT, including a narrative of the schedule modifications, updated activities, project issues affecting the schedule, and a description of the Critical Path with updated schedule milestones. These daily, weekly, and monthly reviews of production rates, activity durations, and overall schedule status will enable our Team to identify and mitigate potential schedule delays to ensure early completion of the Project.

Procedures for Rescheduling Activities and Schedule Recovery

If during the course of the Project, we encounter delays to the Projects Critical Path, we will complete a Time Impact Analysis (TIA), re-sequence the schedule, and prepare a schedule recovery plan to reclaim lost time. This plan may include increasing work shifts, adding crews and resources to construct Critical Path activities concurrently, and changing MOT schemes or modifying the design to remove activities from the critical path. If it is early in the Project at the time the delay is encountered, schedule recovery may require adjustments by any or all discipline managers including, Design, Permitting, Right-of- Way, Utility Relocation, and Construction. However, if all other design-build disciplines have completed their tasks, re-sequencing the construction schedule by the Construction Manager will be the primary focus in order to mitigate the delay.

Mitigation of Major Delay Risks

Timely Review and Approval of Submittals

Upon Notice of Award, the Shirley Team will prepare a submittal schedule identifying all submittals that will be required for the Project. This schedule will identify the individual responsible for preparing the submittal, the anticipated submittal date, the parties responsible for reviewing and approving, the anticipated review durations, and a list of the individuals that must receive a copy of the approved submittal. At a minimum, the following submittals will be included:

- Design Submissions
- Permits
- QA/QC Plan
- CPM Schedule and Updates
- MOT and TMP Plans
- Materials Documentation, including Source of Supply and Shop Drawings

Submittals deemed critical to the success of the Project, including design and permitting submissions and major materials submissions (such as structural steel shop drawings), will be included in the Project CPM Schedule where the progress can be monitored concurrently with the affected construction activity. Each submittal will include a transmittal cover sheet identifying the submittal's priority level. For submittals between the contractor and design firm, normal priority submittals will be returned within four weeks; high priority submittals within two weeks and urgent submittals within three days. This also allows the Team to prioritize multiple submittals that are turned in concurrently. For submittals to government agencies and utilities, we will include adequate review timeframes in the CPM Schedule for approval of environmental permits and utility submissions as applicable.

We will also maintain a submittal log showing the status of all submittals. We will update the log with the submission and return each submittal showing the submission date, anticipated response date, priority, and status. The submittal log will be reviewed at the weekly Design Coordination, Owner Progress, and Construction Progress meetings. It can easily be sorted to distribute lists of active and overdue submittals. We will discuss issues affecting the timely completion of submittal reviews with the responsible party and a plan for resolving them will be agreed to.

This process, along with diligent assessment of the CPM schedule, will ensure that timely review of submittals will be constantly monitored and managed to ensure that no construction activities are delayed by the submittal process.

Utility Relocations

Some of the biggest risks to a design-build schedule involve public/private utility companies who do not have a vested interest in the Project and are not necessarily compelled to complete their work within the scheduled time constraints. To combat this risk, we have started our planning and coordination process for these utilities by meeting with each affected utility and discussing the Project, the utility impacts, potential relocation options, and discussing ways to accelerate the utility relocations after award of the Project.

We have facilitated these discussions through the pre-existing relationships that we have developed through other design-build projects. Our Utility Manager, Todd Kief, has coordinated over $50 million of utility relocations on our design-build projects over the last 12 years. This experience has enabled Todd to develop relationships with over 25 different utility owners including all of the utilities that will be impacted on the Project.

This early coordination will enable us to identify opportunities to advance the utility relocations and minimize the risk for utility delays after NTP. The early personal contact with each utility enables us to manage their issues and concerns and allows us to build float into the utility relocation activities on the Project.

Summary

Our Team's comprehensive pre-proposal preparation, proven experience in all phases of design-build, and extensive project controls and schedule management and recovery techniques will serve to ensure that the Project will complete on schedule. Over the years, we have built a solid professional reputation on meeting our commitments, completing projects ahead of schedule and under budget, performing quality work in a safe work environment, and establishing a problem-solving atmosphere and partnership with the Owner. This is a result of our extensive experience, quality people, and corporate commitment. The I-64 Capacity Improvements - Segment I Project is a challenging and exciting Project for our Team and is one that we will bring this same level of commitment to for the benefit of VDOT, the City of Newport News, and the public.

I-64 CAPACITY IMPROVEMENTS SEGMENT 1

4.7 PROPOSAL SCHEDULE

SUBMISSION: December 2, 2014

Activity ID	Activity Name	Original Duration	Start	Finish
I-64 CAPACITY IMPROVEMENTS SEGMENT 1		728d	20-Jan-2015	01-Dec-2017
Contract: C00104905DB75 I-64 CAPACITY IMPROVEMENTS SEGMENT		728d	20-Jan-2015	01-Dec-2017
SCHEDULE MILESTONES		728d	20-Jan-2015	01-Dec-2017
A1000	NOTICE OF INTENT TO AWARD (01/20/2015)	0d	20-Jan-2015*	
A1010	CTB AWARD	0d	18-Feb-2015*	
A1020	DESIGN-BUILD CONTRACT EXECUTION	0d	27-Feb-2015*	
A1030	NOTICE TO PROCEED (03/18/2015)	0d	18-Mar-2015*	
A1040	SCOPE VALIDATION PERIOD (120 DAYS)	120d	18-Mar-2015	15-Jul-2015
A1050	BEGIN PHASE 1 CONSTRUCTION	0d	30-Oct-2015	
A1060	PROPERTY RIGHTS ACQUIRED AREA 2	0d	04-Mar-2016	
A1065	FINAL PLAN and PERMITTING APPROVAL	0d	14-Mar-2016	
A1070	BEGIN PHASE 2 CONSTRUCTION	0d	21-Mar-2016	
A1080	BEGIN PHASE 3 CONSTRUCTION	0d	17-Jan-2017	
A1110	NEW INSIDE TRAVEL LANES OPEN to TRAFFIC	0d		13-Sep-2017
A1100	BEGIN PHASE 4 CONSTRUCTION	0d		22-Sep-2017
A1120	PROJECT READY FOR FINAL WALKTHROUGH	0d		28-Oct-2017
A1130	COMPLETE VDOT PUNCHLIST	35d	28-Oct-2017	01-Dec-2017
A1140	FINAL COMPLETION	0d		01-Dec-2017
DESIGN PHASE		267d	18-Mar-2015	05-Apr-2016
PRELIMINARY DESIGN WORK		120d	18-Mar-2015	03-Sep-2015
BA1020	BASE MAPPING/FIELD SURVEY	45d	18-Mar-2015	01-May-2015
BA1040	UTILITY DESIGNATIONS	60d	18-Mar-2015	16-May-2015
BA1140	GEOTECHNICAL INVESTIGATION	80d	17-Apr-2015	05-Jul-2015
BA1060	UTILITY TEST PITS	45d	17-May-2015	30-Jun-2015
BA1160	VDOT REVIEWS GEOTECHNICAL REPORTS	60d	06-Jul-2015	03-Sep-2015
ROADWAY DESIGN		149d	17-Apr-2015	17-Nov-2015
BB2000	PREPARE ROADWAY PLANS (1ST SUBMISSION)	72d	17-Apr-2015	27-Jun-2015
BB2020	DESIGN QA/QC (1ST SUBMISSION)	5d	28-Jun-2015	02-Jul-2015
BB2040	SUBMIT ROADWAY PLANS (1ST SUBMISSION)	0d	03-Jul-2015	
BB2060	VDOT/FHWA REVIEW/COMMENT ROADWAY PLANS (1ST	21d	03-Jul-2015	23-Jul-2015
BB2080	PREPARE ROADWAY PLANS (2ND SUBMISSION)	43d	19-Jul-2015	30-Aug-2015
BB2100	DESIGN QA/QC (2ND SUBMISSION)	5d	31-Aug-2015	04-Sep-2015
BB2120	SUBMIT ROADWAY PLANS (2ND SUBMISSION)	0d	05-Sep-2015	
BB2140	VDOT/FHWA REVIEW/COMMENT ROADWAY PLANS (2ND	21d	05-Sep-2015	25-Sep-2015
BB2160	PREPARE FINAL ROADWAY PLANS	25d	26-Sep-2015	20-Oct-2015
BB2180	DESIGN FINAL QA/QC PLANS	5d	21-Oct-2015	25-Oct-2015
BB2200	SUBMIT FINAL ROADWAY PLANS	1d	26-Oct-2015	26-Oct-2015
BB2220	VDOT/FHWA REVIEW/COMMENT FINAL ROADWAY PLAN	21d	27-Oct-2015	16-Nov-2015
BB2240	FINAL ROADWAY PLANS APPROVED	0d	17-Nov-2015	
BRIDGE DESIGN		148d	29-Apr-2015	29-Nov-2015
BC3008	SUBMIT PRELIMINARY BRIDGE DESIGNS (STAGE I)	60d	29-Apr-2015	27-Jun-2015
BC3020	VDOT/FHWA REVIEW/COMMENT BRIDGE PRELIMINARY	21d	28-Jun-2015	18-Jul-2015
BC3030	PERFORM SCOUR ANALYSIS	30d	06-Jul-2015	14-Aug-2015
BC3040	PREPARE BRIDGE PLANS (1ST SUBMISSION)	45d	14-Jul-2015	27-Aug-2015
BC3045	SUBMIT PRELIMINARY DESIGN to CSX for INDUSTRIAL P.	2d	20-Jul-2015	21-Jul-2015
BC3060	DESIGN QA/QC (1ST SUBMISSION)	5d	28-Aug-2015	01-Sep-2015
BC3080	SUBMIT BRIDGE PLANS (1ST SUBMISSION)	0d	02-Sep-2015	
BC3100	VDOT/FHWA REVIEW/COMMENT BRIDGE PLANS (1ST S	21d	02-Sep-2015	22-Sep-2015

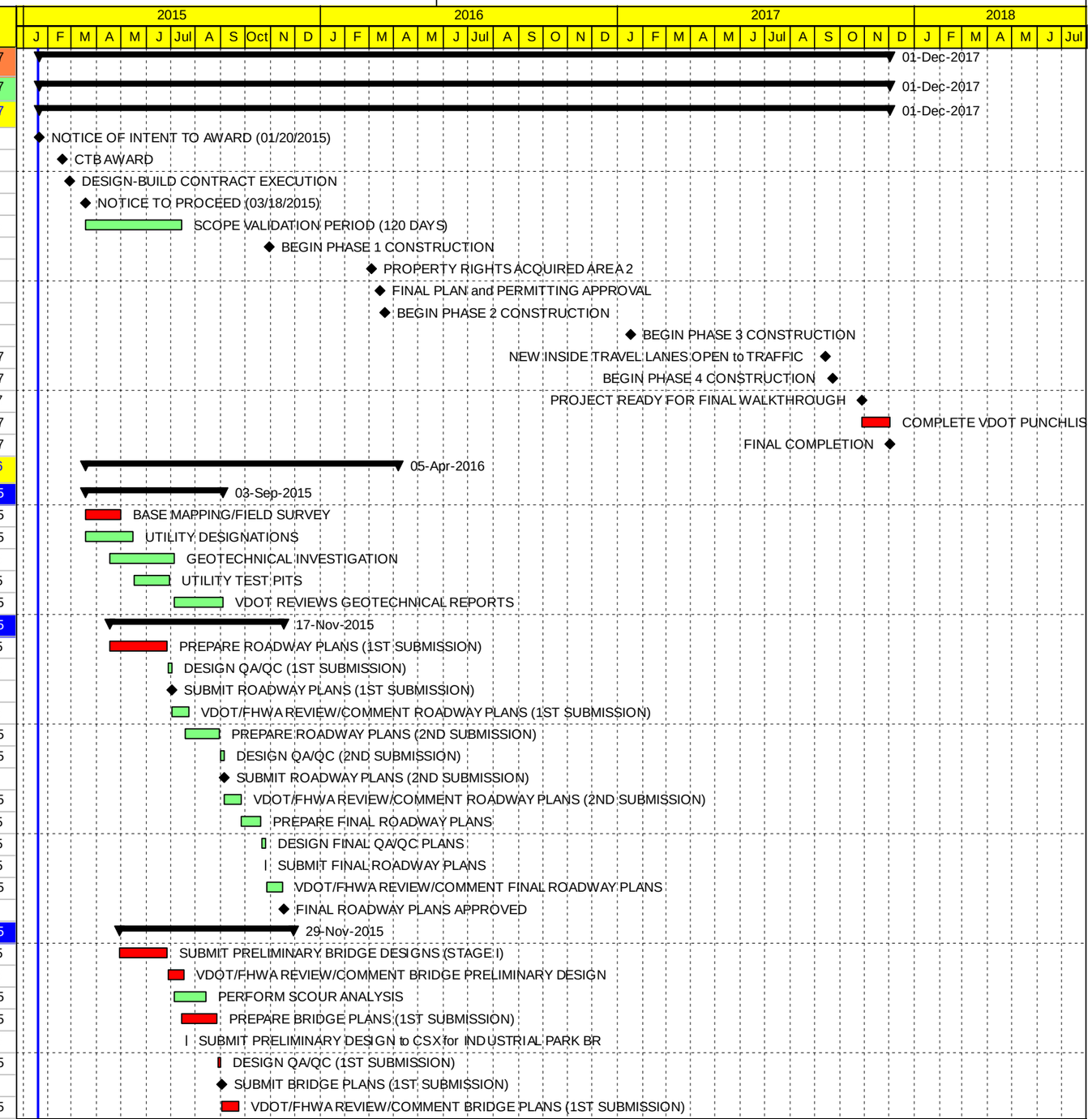

Remaining Level of Effort | Finish Milesone | Remaining Work | Summary
Start Milestone | Actual Work | Critical Remaining Work

SHIRLEY CONTRACTING COMPANY, LLC

I-64 CAPACITY IMPROVEMENTS SEGMENT 1

4.7 PROPOSAL SCHEDULE

SUBMISSION: December 2, 2014

Activity ID	Activity Name	Original Duration	Start	Finish
BC3120	PREPARE FINAL BRIDGE PLANS	40d	23-Sep-2015	01-Nov-2015
BC3140	DESIGN QA/QC (FINAL SUBMISSION)	5d	02-Nov-2015	06-Nov-2015
BC3160	SUBMIT FINAL BRIDGE PLANS	1d	07-Nov-2015	07-Nov-2015
BC3180	VDOT/FHWA REVIEW/COMMENT BRIDGE PLANS (FINAL	21d	08-Nov-2015	28-Nov-2015
BC3200	FINAL BRIDGE PLANS APPROVED	0d	29-Nov-2015	
CSX COORDINATION		179d	22-Jul-2015	05-Apr-2016
BC3055	CSX REVIEW and COMMENT PRELIMINARY DESIGN	20d	22-Jul-2015	10-Aug-2015
H11005	PREPARE CSX WORK PLANS and DEMOLITION PLAN	20d	23-Sep-2015	20-Oct-2015
BC3125	CSX REVIEW and COMMENT 2nd SUBMISSION	25d	23-Sep-2015	17-Oct-2015
H11007	CSX REVIEW and APPROVE WORK PLAN	20d	21-Oct-2015	17-Nov-2015
H3B3000	CSX Work Plan Approved - CSX Advertise Flagman	20d	18-Nov-2015	17-Dec-2015
H3B3002	CSX Obtain Flagman for Demolition Start	75d	18-Dec-2015	05-Apr-2016
PUBLIC INVOLVEMENT		664d	18-Mar-2015	27-Oct-2017
C1000	SUBMIT EMERGENCY CONTACT LIST	10d	18-Mar-2015	27-Mar-2015
C1010	DEVELOP PUBLIC INFORMATION and COMMUNICATION	120d	28-Mar-2015	25-Jul-2015
C1020	DESIGN PUBLIC INVOLVEMENT & AFFAIRS MEETING	5d	29-Jun-2015	06-Jul-2015
C2005	VDOT REVIEW PICP WITH TEAM AND MODIFY	30d	27-Jul-2015	04-Sep-2015
C2040	FINAL PICP APPROVED	0d	08-Sep-2015	
C2010	PRECONSTRUCTION PUBLIC INFORMATION MEETING	30d	01-Oct-2015	30-Oct-2015
C2020	PUBLIC INFO MTGS/WEBSITE UPDATES/ SOCIAL MEDIA	728d	31-Oct-2015	27-Oct-2017
ENVIRONMENTAL PERMITTING		250d	18-Mar-2015	14-Mar-2016
D1000	DISTRIBUTE ACCESS LETTERS	7d	18-Mar-2015	24-Mar-2015
D1010	PROPERTY ACCESS HOLD	15d	25-Mar-2015	08-Apr-2015
D1020	HAZARDOUS MATERIAL SURVEY PHASE I	60d	09-Apr-2015	07-Jun-2015
D1060	T&E SPECIES COORDINATION	60d	02-May-2015	30-Jun-2015
D1035	WETLAND DELINEATIONS, SURVEYS, & JURISDICTIONA	60d	02-May-2015	30-Jun-2015
D1030	HAZARDOUS MATERIAL SURVEY PHASE II	60d	08-Jun-2015	06-Aug-2015
D1040	ENVIRONMENTAL PERMIT "EARLY COORDINATION"	90d	01-Jul-2015	28-Sep-2015
D1200	LEAD AND ASBESTOS SURVEYS AND TESTING (BRIDGE	45d	28-Aug-2015	11-Oct-2015
D1180	LD-445 FORMS - TO BE SUBMITTED WITH 60% PLANS	30d	30-Aug-2015	28-Sep-2015
D1188	COMPLETE SWPPP (LD-455E) CERTIFICATIONS	5d	29-Sep-2015	03-Oct-2015
D1184	REQUEST PERMIT COVERAGE (APPLICATION COMPLET	0d	29-Sep-2015	
D1190	APPROVED SWPPP (LD-455E) (HOLD PT)	0d	04-Oct-2015	
D2060	*CORPS OF ENGINEERS INDIVIDUAL PERMIT	90d	02-Nov-2015	11-Mar-2016
D2070	*VIRGINIA WATER PROTECTION INDIVIDUAL PERMIT	90d	02-Nov-2015	11-Mar-2016
D2080	*VMRC SUB-AQUEOUS BED INDIVIDUAL PERMIT	85d	02-Nov-2015	04-Mar-2016
D2090	ENVIRONMENTAL PERMITTING COMPLETE	0d	14-Mar-2016	
RIGHT OF WAY ACQUISITION/EASEMENTS		303d	03-Jul-2015	13-Sep-2016
ACQUISITION PLAN AND SETTLEMENTS		303d	03-Jul-2015	13-Sep-2016
E1000	ACQUISITION AND RELOCATION PLAN	20d	03-Jul-2015	22-Jul-2015
E1020	VDOT R/A ACQUISITION AND RELOCATION PLAN	28d	23-Jul-2015	19-Aug-2015
E1040	VDOT ISSUE NTC-ROWA (HOLD POINT)	5d	19-Aug-2015	26-Aug-2015
E1050	Settlement Documents to Settlement Attorney	2d	07-Jun-2016	09-Jun-2016
E1060	Obtain release of Liens	60d	10-Jun-2016	08-Aug-2016
E1070	Notice to VDOT that all Liens Are Cleared	0d		08-Aug-2016
E1080	VDOT Issues Settlement Check	21d	09-Aug-2016	29-Aug-2016
E1090	Settlement Atty. Holds Settlement / Records	10d	29-Aug-2016	13-Sep-2016
E1100	RIGHT OF WAY ACQUISITIONS COMPLETE	0d		13-Sep-2016

Remaining Level of Effort | Finish Milesone | Remaining Work | Summary
Start Milestone | Actual Work | Critical Remaining Work

SHIRLEY CONTRACTING COMPANY, LLC

I-64 CAPACITY IMPROVEMENTS SEGMENT 1

4.7 PROPOSAL SCHEDULE

SUBMISSION: December 2, 2014

Activity ID	Activity Name	Original Duration	Start	Finish
AREA 2 ROW ACQUISITIONS - 1585+00 to 1688+00(10,300 LF)		144d	08-Sep-2015	01-Apr-2016
EE11010	Complete 60 Yr Title Exam	30d	08-Sep-2015	19-Oct-2015
EE11020	Complete Appraisal	40d	08-Sep-2015	02-Nov-2015
EE11030	Review Appraiser Completes Review	10d	03-Nov-2015	16-Nov-2015
EE11040	Submit Appraisal to VDOT (RUMS)	2d	17-Nov-2015	18-Nov-2015
EE11050	VDOT Approves Appraisal	21d	19-Nov-2015	09-Dec-2015
EE11060	Prepare Offer Package	5d	19-Nov-2015	25-Nov-2015
EE11070	Negotiator Make Initial Contact / Present Offer	10d	09-Dec-2015	23-Dec-2015
EE11080	Negotiations	65d	24-Dec-2015	26-Feb-2016
EE11090	Send Notice of Filing Certif. to Property Owner	3d	26-Feb-2016	02-Mar-2016
EE11100	Prepare / Finalize Plat	4d	26-Feb-2016	03-Mar-2016
EE11110	Prepare Certificate Package	5d	26-Feb-2016	04-Mar-2016
EE11150	Obtain Signed Option	5d	26-Feb-2016	04-Mar-2016
EE11120	Submit Certificate Package to VDOT	0d	04-Mar-2016	04-Mar-2016
EE11160	Option / Settlement Docs Submitted to VDOT	5d	04-Mar-2016	11-Mar-2016
EE11230	Property Access for Construction - If By Option	0d		04-Mar-2016
EE11130	VDOT Reviews / Issues Certificate & Check	21d	05-Mar-2016	25-Mar-2016
EE11170	VDOT Reviews Settlement Documents	21d	12-Mar-2016	01-Apr-2016
EE11140	Design Builder Files Certificate @ Court house	2d	25-Mar-2016	29-Mar-2016
EE11240	Property Access for Constr. - If By Certificate	0d		29-Mar-2016
EE11250	Property Access for Utilities -If By Certificate	0d		29-Mar-2016
AREA 1 ROW ACQUISITIONS - 1501+23 to 1585+00 (8,377 LF)		146d	22-Sep-2015	19-Apr-2016
E31000	Complete 60 Yr Title Exam	30d	22-Sep-2015	02-Nov-2015
E31010	Complete Appraisal	40d	22-Sep-2015	16-Nov-2015
E31020	Review Appraiser Completes Review	10d	17-Nov-2015	02-Dec-2015
E31030	Submit Appraisal to VDOT (RUMS)	2d	03-Dec-2015	04-Dec-2015
E31050	VDOT Approves Appraisal	21d	05-Dec-2015	25-Dec-2015
E31040	Prepare Offer Package	5d	07-Dec-2015	11-Dec-2015
E31060	Negotiator Make Initial Contact / Present Offer	10d	28-Dec-2015	11-Jan-2016
E31070	Negotiations	60d	12-Jan-2016	11-Mar-2016
E31080	Send Notice of Filing Certif. to Property Owner	3d	11-Mar-2016	16-Mar-2016
E31090	Prepare / Finalize Plat	4d	11-Mar-2016	17-Mar-2016
E31100	Prepare Certificate Package	5d	11-Mar-2016	18-Mar-2016
E31110	Obtain Signed Option	5d	11-Mar-2016	18-Mar-2016
E31120	Submit Certificate Package to VDOT	0d	18-Mar-2016	18-Mar-2016
E31130	Option / Settlement Docs Submitted to VDOT	5d	18-Mar-2016	25-Mar-2016
E31140	Property Access for Construction - If By Option	0d		18-Mar-2016
E31150	VDOT Reviews / Issues Certificate & Check	21d	19-Mar-2016	08-Apr-2016
E31160	VDOT Reviews Settlement Documents	21d	26-Mar-2016	15-Apr-2016
E31170	Design Builder Files Certificate @ Court house	2d	15-Apr-2016	19-Apr-2016
E31190	Property Access for Constr. - If By Certificate	0d		19-Apr-2016
E31180	Property Access for Utilities -If By Certificate	0d		19-Apr-2016
AREA 3 ROW ACQUISITIONS - 1688+00 to 1782+40 (9,440 LF)		150d	03-Nov-2015	07-Jun-2016
E31200	Complete 60 Yr Title Exam	30d	03-Nov-2015	16-Dec-2015
E31210	Complete Appraisal	40d	03-Nov-2015	04-Jan-2016
E31220	Review Appraiser Completes Review	10d	05-Jan-2016	18-Jan-2016
E31230	Submit Appraisal to VDOT (RUMS)	2d	19-Jan-2016	20-Jan-2016
E31250	VDOT Approves Appraisal	21d	21-Jan-2016	10-Feb-2016
E31240	Prepare Offer Package	5d	21-Jan-2016	27-Jan-2016

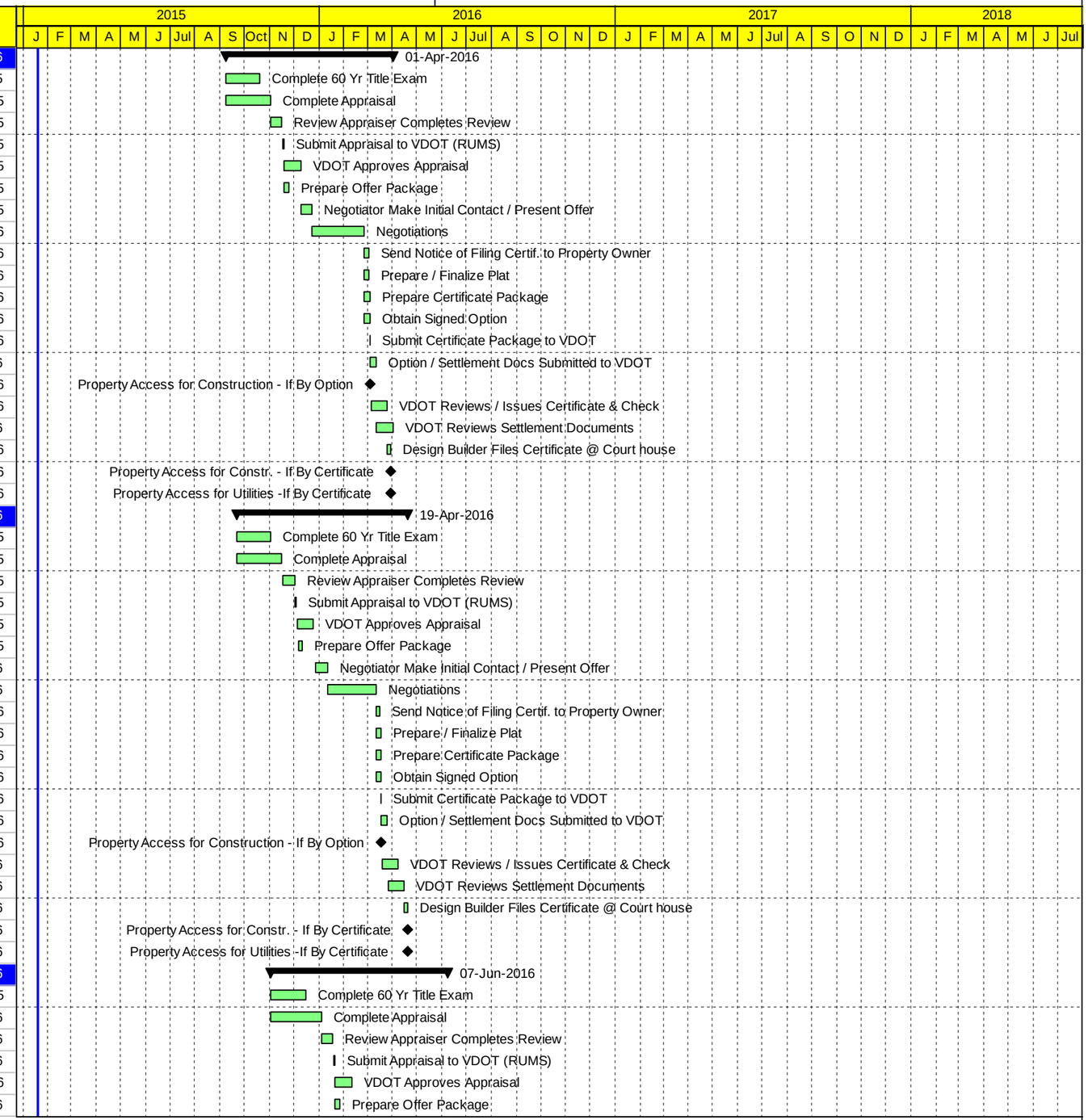

Remaining Level of Effort | Finish Milesone | Remaining Work | Summary
Start Milestone | Actual Work | Critical Remaining Work

SHIRLEY CONTRACTING COMPANY, LLC

I-64 CAPACITY IMPROVEMENTS SEGMENT 1

4.7 PROPOSAL SCHEDULE

SUBMISSION: December 2, 2014

Activity ID	Activity Name	Original Duration	Start	Finish
E31260	Negotiator Make Initial Contact / Present Offer	10d	10-Feb-2016	24-Feb-2016
E31270	Negotiations	65d	25-Feb-2016	29-Apr-2016
E31280	Send Notice of Filing Certif. to Property Owner	3d	29-Apr-2016	04-May-2016
E31290	Prepare / Finalize Plat	4d	29-Apr-2016	05-May-2016
E31300	Prepare Certificate Package	5d	29-Apr-2016	06-May-2016
E31310	Obtain Signed Option	5d	29-Apr-2016	06-May-2016
E31320	Submit Certificate Package to VDOT	0d	06-May-2016	06-May-2016
E31330	Option / Settlement Docs Submitted to VDOT	5d	06-May-2016	13-May-2016
E31340	Property Access for Construction - If By Option	0d		06-May-2016
E31350	VDOT Reviews / Issues Certificate & Check	21d	07-May-2016	27-May-2016
E31360	VDOT Reviews Settlement Documents	21d	14-May-2016	03-Jun-2016
E31370	Design Builder Files Certificate @ Court house	2d	03-Jun-2016	07-Jun-2016
E31390	Property Access for Constr. - If By Certificate	0d		07-Jun-2016
E31380	Property Access for Utilities -If By Certificate	0d		07-Jun-2016
UTILITY RELOCATIONS		414d	30-Jun-2015	20-Feb-2017
DOMINION VIRGINIA POWER OVERHEAD/UNDERGROUND		412d	06-Jul-2015	20-Feb-2017
FA1000	HOLD UFI MEETING WITH VIRGINIA POWER	1d	06-Jul-2015	06-Jul-2015
FA1020	DOMINION POWER SUBMITS PE ESTIMATE	30d	07-Jul-2015	17-Aug-2015
FA1040	REVIEW/APPROVE PE ESTIMATE	5d	18-Aug-2015	24-Aug-2015
FA1060	DOMINION POWER COMPLETES UTILITY DESIGN	90d	25-Aug-2015	22-Nov-2015
FA1080	APPROVE UTILITY DESIGN	5d	23-Nov-2015	02-Dec-2015
FA1120	DOMINION POWER PERFORM RELOCATIONS at FORT I	25d	11-Apr-2016	13-May-2016
FA1130	DOMINION PERFORM RELOCATION at NOISE WALLS	30d	10-Jan-2017	20-Feb-2017
NEWPORT NEWS WATER		291d	30-Jun-2015	23-Aug-2016
FC1000	HOLD UFI MEETING WITH NEWPORT NEWS WATER	1d	30-Jun-2015	01-Jul-2015
FC1020	NN WATER SUBMITS PE ESTIMATE	45d	01-Jul-2015	03-Sep-2015
FC1040	REVIEW/APPROVE PE ESTIMATE	5d	03-Sep-2015	14-Sep-2015
FC1060	COUNTY COMPLETES UTILITY DESIGN	90d	15-Sep-2015	13-Dec-2015
FC1080	APPROVE UTILITY DESIGN	5d	14-Dec-2015	18-Dec-2015
FC1120	EXTEND CASING PIPES AROUND W/M in MEDIAN	30d	13-Jul-2016	23-Aug-2016
CONSTRUCTION		529d	25-Sep-2015	27-Oct-2017
PRE-CONSTRUCTION, SUBMITTALS and MATERIAL PROCUREMENT		529d	25-Sep-2015	27-Oct-2017
H11010	MOBILIZATION / SET FIELD OFFICE FOR CONSTRUCTIC	15d	02-Oct-2015	23-Oct-2015
H11020	INITIAL SURVEY CONTROLS	5d	23-Oct-2015	30-Oct-2015
H11040	PROCURE PCBT STRUCTURAL FABRICATOR	10d	29-Oct-2015	07-Nov-2015
H11050	BRIDGE B616 and B617 PCBT STRUCTURAL SHOP DWG	30d	08-Nov-2015	07-Dec-2015
H11080	PROCURE OVERHEAD SIGN SUBCONTRACTOR	20d	17-Nov-2015	06-Dec-2015
H11090	OVERHEAD SIGN SHOP DRAWINGS	45d	07-Dec-2015	20-Jan-2016
H11060	REVIEW and APPROVE B-616 AND B-617 PCBT SHOP DW	21d	08-Dec-2015	28-Dec-2015
H11070	FABRICATE B-616 and B-617 PCBT GIRDERS	120d	29-Dec-2015	26-Apr-2016
H11100	REVIEW AND APPROVE OVERHEAD SIGN SHOP DWGS	25d	21-Jan-2016	14-Feb-2016
H11110	FABRICATE OVERHEAD SIGN COMPONENTS	180d	15-Feb-2016	12-Aug-2016
QUALITY ASSURANCE / QUALITY CONTROL PROCESS		529d	25-Sep-2015	27-Oct-2017
H1A1005	QA/QC PREPARATORY MEETING - GRADING & DRAINAC	5d	25-Sep-2015	02-Oct-2015
H1A1000	QA/QC INSPECTIONS / REPORTING / AS-BUILTS	529d	25-Sep-2015	27-Oct-2017
H1A1060	QA/QC PREPARATORY MEETING - ASPHALT PAVING / PA	5d	02-Oct-2015	09-Oct-2015
H1A1010	QA/QC PREPARATORY MEETING - DEMOLITION	5d	21-Apr-2016	27-Apr-2016
H1A1020	QA/QC PREPARATORY MEETING - BRIDGE FOUNDATIO	5d	27-Jun-2016	01-Jul-2016

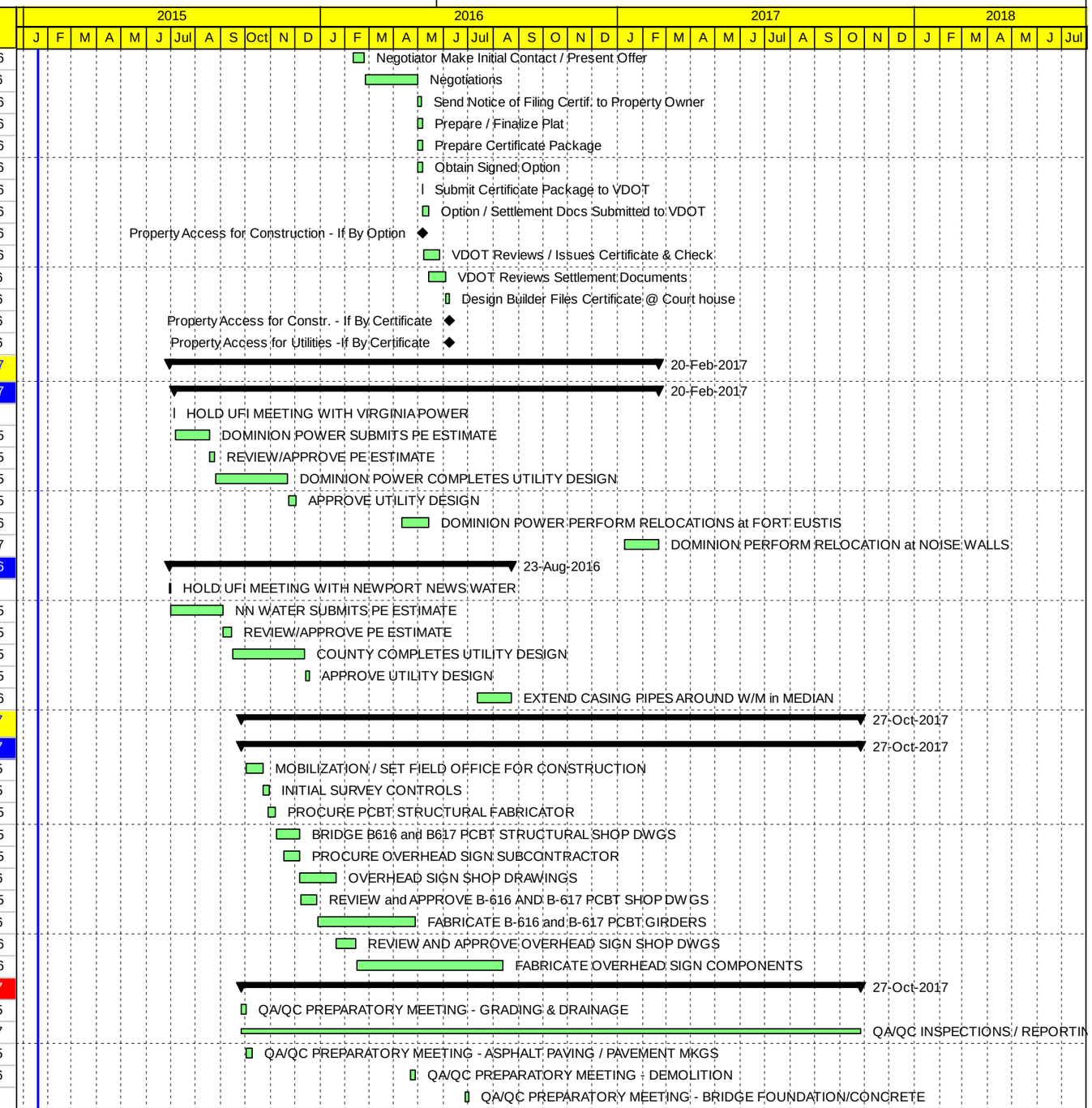

Remaining Level of Effort | Finish Milesone | Remaining Work | Summary
Start Milestone | Actual Work | Critical Remaining Work

SHIRLEY CONTRACTING COMPANY, LLC

I-64 CAPACITY IMPROVEMENTS SEGMENT 1

4.7 PROPOSAL SCHEDULE

SUBMISSION: December 2, 2014

Activity ID	Activity Name	Original Duration	Start	Finish
H1A1080	QA/QC PREPARATORY MEETING - BOX CULVERT CONS	5d	13-Jul-2016	19-Jul-2016
H1A1040	QA/QC PREPARATORY MEETING - AGGREGATES	5d	25-Jul-2016	29-Jul-2016
H1A1030	QA/QC PREPARATORY MEETING - STRUCTURAL STEEL	5d	16-Aug-2016	22-Aug-2016
H1A1050	QA/QC PREPARATORY MEETING - BRIDGE DECKS	5d	23-Sep-2016	29-Sep-2016
H1A1070	QA/QC PREPARATORY MEETING - GUARDRAIL & SIGNS	5d	29-Sep-2016	05-Oct-2016
H1A1090	QA/QC PREPARATORY MEETING - THMACO PAVING	2d	25-Aug-2017	28-Aug-2017
PHASE 1 - LANE SHIFT AND SHOULDER STRENGTHENING at BRIDGES		**87d**	**30-Oct-2015**	**08-Mar-2016**
I-64 EASTBOUND		**57d**	**30-Oct-2015**	**26-Jan-2016**
H2A1000	Set MOT Signage and PCMS Boards	5d	30-Oct-2015	06-Nov-2015
H2A1010	Mill Eastbound Shoulders at Bridge Locations / Temp Asphalt	12d	06-Nov-2015	24-Nov-2015
H2A1020	I-64 Eastbound Lane Shift- Eradicate and Install Temp Paver	10d	24-Nov-2015	10-Dec-2015
H2A1030	Set Traffic Barrier Service - I-64 Eastbound	30d	10-Dec-2015	26-Jan-2016
I-64 WESTBOUND		**82d**	**06-Nov-2015**	**08-Mar-2016**
H2B1000	Set MOT Signage and PCMS Boards	3d	06-Nov-2015	11-Nov-2015
H2B1010	Mill Westbound Shoulders at Bridges and Place Temp Aspha	12d	24-Nov-2015	14-Dec-2015
H2B1020	I-64 Westbound Lane Shift- Eradicate and Install Temp Pave	10d	14-Dec-2015	30-Dec-2015
H2B1030	Set Traffic Barrier Service - I-64 Westbound	30d	26-Jan-2016	08-Mar-2016
H2B1040	COMPLETE INSIDE WIDENING PHASE I	0d	08-Mar-2016	
PHASE 2 - I-64 NEW INSIDE LANES & 1ST PHASE OF BRIDGES		**306d**	**08-Mar-2016**	**22-May-2017**
AREA 2 - 1585+00 to 1688+00(10,300 LF)		**229d**	**14-Mar-2016**	**07-Feb-2017**
AREA 2 - I-64 EASTBOUND and WESTBOUND INSIDE WIDENING		**208d**	**14-Mar-2016**	**09-Jan-2017**
H3B1000	Sawcut 1' Into Existing Eastbound and Westbound Lanes	5d	14-Mar-2016	18-Mar-2016
H3B1010	Clear and Grub Median Area	15d	21-Mar-2016	08-Apr-2016
H3B1030	Install Sediment and Erosion Perimeter Controls	10d	07-Apr-2016	20-Apr-2016
H3B1020	Clear and Grub Fort Eustis Interchange Ramp Areas as Req	8d	11-Apr-2016	20-Apr-2016
H3B1060	Construct BioRetension Basins for Phase 1 E&S Controls	15d	19-Apr-2016	10-May-2016
H3B1040	Install Median Drainage Manholes and Pipe	50d	21-Apr-2016	30-Jun-2016
H3B1050	Install Jacked and Bore Crossings (2 Ea)	20d	21-Apr-2016	18-May-2016
H3B1070	Demo Existing Shoulders Following Bulk of Drainage Work	15d	12-May-2016	02-Jun-2016
H3B1080	Bulk Excavation Area 2	35d	03-Jun-2016	22-Jul-2016
H3B1090	Perform Subgrade Stabilization Area 2	50d	03-Jun-2016	12-Aug-2016
H3B1100	Fine Grade Roadway and Shoulder Areas	20d	25-Jul-2016	19-Aug-2016
H3B1110	Install Cement Treated Aggregate Base in Roadway/Shoulde	20d	15-Aug-2016	12-Sep-2016
H3B1120	Install Underdrain UD-4	15d	24-Aug-2016	14-Sep-2016
H3B1130	Install Open Graded Drainage Layer	10d	15-Sep-2016	28-Sep-2016
H3B1140	Install Base Asphalt Roadway (New Lane and Shoulder)	20d	29-Sep-2016	26-Oct-2016
H3B1150	Install Intermediate Asphalt (New Lane and Shoulder)	10d	27-Oct-2016	09-Nov-2016
H3B1160	Install MB-7F Median Barrier	25d	27-Oct-2016	02-Dec-2016
H3B1170	Install MB-3 Guardrail as Required	20d	10-Nov-2016	09-Dec-2016
H3B1180	Final Dress-up of Slopes and Seed	5d	12-Dec-2016	16-Dec-2016
H3B1190	Temp Pavement Markings for Phase 3 Construction	8d	19-Dec-2016	30-Dec-2016
H3B1200	End Phase 2 Area 2 and Remove Barriers	5d	03-Jan-2017	09-Jan-2017
STAGE 1 BRIDGES B-616 & B-617 over INDUSTRIAL PARK DR/CSX		**180d**	**21-Apr-2016**	**09-Jan-2017**
H3B3005	Lane Shift Complete/Bridge Plans Approved	5d	21-Apr-2016	27-Apr-2016
H3B3010	Sawcut Existing Deck	10d	28-Apr-2016	11-May-2016
H3B3015	Set Protection Measures for CSX RR	5d	12-May-2016	18-May-2016
H3B3020	Remove Parapet and Existing Deck Portion	12d	19-May-2016	03-Jun-2016
H3B3030	Remove two Existing Girder Lines (12 total)	5d	06-Jun-2016	10-Jun-2016
H3B3040	Install Shoring as Required at Existing Abutment	5d	13-Jun-2016	17-Jun-2016

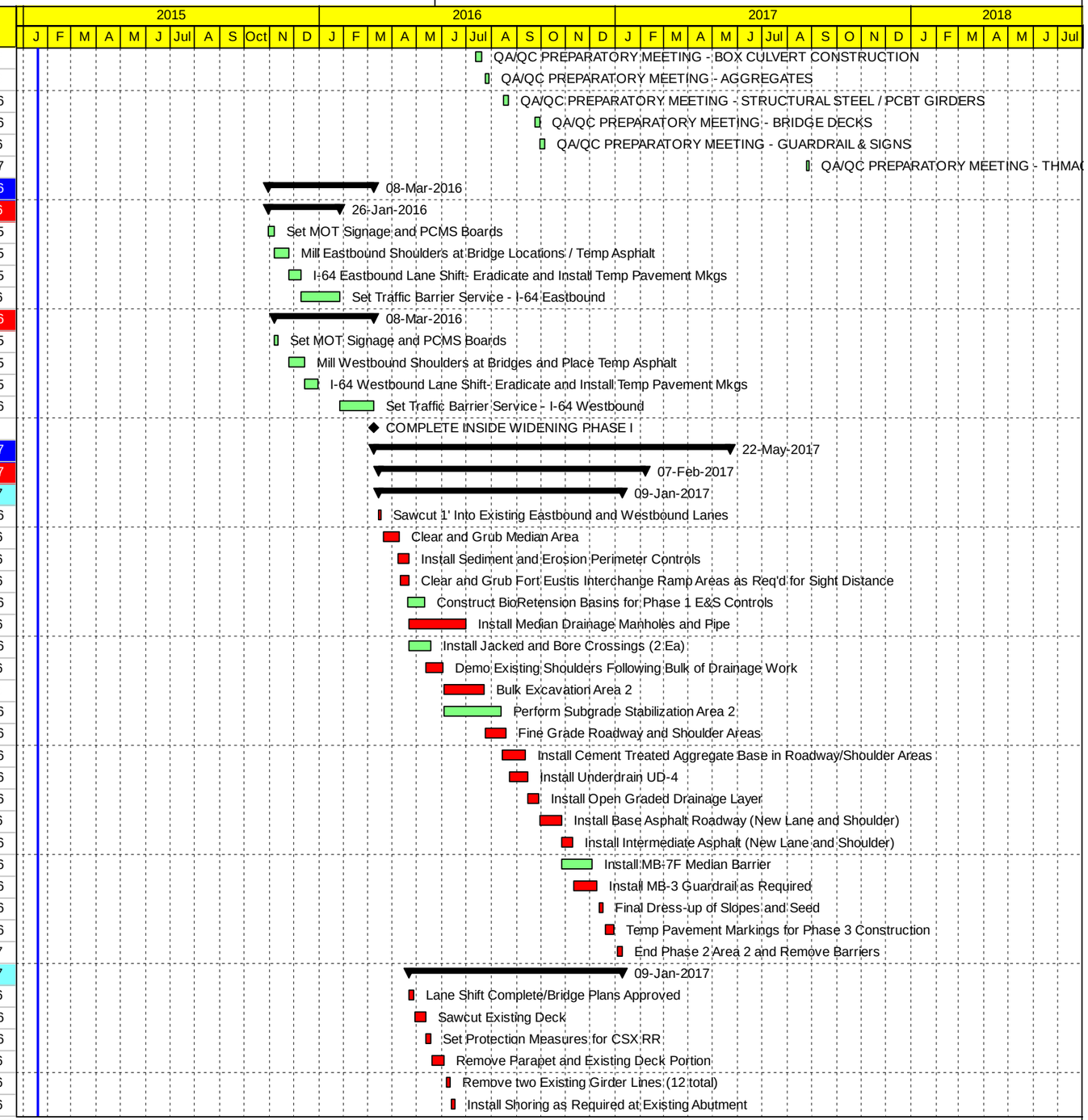

Remaining Level of Effort | Finish Milesone | Remaining Work | Summary
Start Milestone | Actual Work | Critical Remaining Work

SHIRLEY CONTRACTING COMPANY, LLC

I-64 CAPACITY IMPROVEMENTS SEGMENT 1

4.7 PROPOSAL SCHEDULE

SUBMISSION: December 2, 2014

Activity ID	Activity Name	Original Duration	Start	Finish
H3B3050	Access / Shoring at Existing Piers	5d	20-Jun-2016	24-Jun-2016
H3B3060	Excavate / Grade Abutment Ftgs	6d	20-Jun-2016	27-Jun-2016
H3B3070	Drive Abutment Piling	5d	28-Jun-2016	05-Jul-2016
H3B3080	Excavate Pier Footings	7d	28-Jun-2016	07-Jul-2016
H3B3090	FRP Footing Abutment	5d	08-Jul-2016	14-Jul-2016
H3B3100	Drive Pier Piling	10d	08-Jul-2016	21-Jul-2016
H3B3110	FRP Stem & Wing Abutments	14d	15-Jul-2016	03-Aug-2016
H3B3120	FRP Pier Footings	8d	04-Aug-2016	15-Aug-2016
H3B3130	FRP Pier Columns and Cap	20d	16-Aug-2016	13-Sep-2016
H3B3140	Install Slope Protection at Abutments	4d	14-Sep-2016	19-Sep-2016
H3B3150	Set Bearings	3d	15-Sep-2016	19-Sep-2016
H3B3160	Erect New PCBT Girders	6d	15-Sep-2016	22-Sep-2016
H3B3170	FRP Diaphrams	8d	23-Sep-2016	04-Oct-2016
H3B3180	FRP Integral Backwall Abutments	10d	05-Oct-2016	18-Oct-2016
H3B3190	Install Overhangs	5d	19-Oct-2016	25-Oct-2016
H3B3200	Install SIP Deck Forms	5d	26-Oct-2016	01-Nov-2016
H3B3210	FRP Deck	15d	02-Nov-2016	22-Nov-2016
H3B3220	Cure Deck	8d	23-Nov-2016	06-Dec-2016
H3B3230	FRP Bridge Deck Parapets	5d	07-Dec-2016	13-Dec-2016
H3B3240	Cure Bridge Deck Parapets	5d	14-Dec-2016	20-Dec-2016
H3B3250	Backfill Integral Backwall Abutments	3d	21-Dec-2016	27-Dec-2016
H3B3260	FRP Approach Slab Abutment A	4d	28-Dec-2016	03-Jan-2017
H3B3270	FRP Approach Slab Abutment B	4d	04-Jan-2017	09-Jan-2017
H3B3280	Complete Stage I Bridges B-616 & B617	0d		09-Jan-2017
STAGE 1 BRIDGES B-618 & B-619 over FORT EUSTIS BLVD		201d	21-Apr-2016	07-Feb-2017
H3B2000	Lane Shift Complete/Bridge Plans Approved	0d	21-Apr-2016	
H3B2010	Sawcut Existing Deck	5d	12-May-2016	18-May-2016
H3B2020	Remove Parapet and Existing Deck Portion	12d	06-Jun-2016	21-Jun-2016
H3B2030	Remove two Existing Girder Lines (12 total)	5d	22-Jun-2016	28-Jun-2016
H3B2040	Install Shoring as Required at Existing Abutment	5d	29-Jun-2016	06-Jul-2016
H3B2050	Access / Shoring at Existing Piers	5d	07-Jul-2016	13-Jul-2016
H3B2060	Excavate / Grade Abutment Ftgs	6d	07-Jul-2016	14-Jul-2016
H3B2065	Excavate Pier Footings	7d	15-Jul-2016	25-Jul-2016
H3B2070	Drive Abutment Piling	5d	22-Jul-2016	28-Jul-2016
H3B2090	FRP Footing Abutment	5d	29-Jul-2016	04-Aug-2016
H3B2080	Drive Pier Piling	10d	29-Jul-2016	11-Aug-2016
H3B2100	FRP Stem & Wing Abutments	14d	05-Aug-2016	24-Aug-2016
H3B2105	FRP Pier Footings	8d	25-Aug-2016	06-Sep-2016
H3B2110	FRP Pier Columns and Cap	15d	07-Sep-2016	27-Sep-2016
H3B2120	Install Slope Protection at Abutments	4d	28-Sep-2016	03-Oct-2016
H3B2130	Set Bearings	3d	29-Sep-2016	03-Oct-2016
H3B2140	Erect Structural Steel	6d	29-Sep-2016	06-Oct-2016
H3B2150	Diaphrams and Bolt Up	3d	07-Oct-2016	11-Oct-2016
H3B2160	FRP Integral Backwall Abutments	10d	12-Oct-2016	25-Oct-2016
H3B2170	Install Overhangs	5d	26-Oct-2016	01-Nov-2016
H3B2180	Install SIP Deck Forms	5d	23-Nov-2016	01-Dec-2016
H3B2190	FRP Deck	15d	02-Dec-2016	27-Dec-2016
H3B2200	Cure Deck	8d	28-Dec-2016	09-Jan-2017
H3B2210	FRP Bridge Deck Parapets	5d	10-Jan-2017	16-Jan-2017

Remaining Level of Effort | Finish Milesone | Remaining Work | Summary
Start Milestone | Actual Work | Critical Remaining Work

SHIRLEY CONTRACTING COMPANY, LLC

I-64 CAPACITY IMPROVEMENTS SEGMENT 1

4.7 PROPOSAL SCHEDULE

SUBMISSION: December 2, 2014

Activity ID	Activity Name	Original Duration	Start	Finish
H3B2220	Cure Bridge Deck Parapets	5d	17-Jan-2017	23-Jan-2017
H3B2230	Backfill Integral Backwall Abutments	3d	24-Jan-2017	26-Jan-2017
H3B2240	FRP Approach Slab Abutment A	4d	27-Jan-2017	01-Feb-2017
H3B2250	FRP Approach Slab Abutment B	4d	02-Feb-2017	07-Feb-2017
H3B2260	Complete Stage I Bridges B-618 & B619	0d		07-Feb-2017
AREA 1 - 1501+23 to 1585+00 (8,377 LF)		257d	08-Mar-2016	14-Mar-2017
AREA 1 - I-64 EASTBOUND and WESTBOUND INSIDE WIDENING		257d	08-Mar-2016	14-Mar-2017
H3A1000	Set Traffic Barrier Service-AREA 1	16d	08-Mar-2016	30-Mar-2016
H3A1005	Sawcut 1' Into Existing Eastbound and Westbound Lanes	10d	11-Apr-2016	22-Apr-2016
H3A1010	Clear and Grub Median Area	20d	21-Apr-2016	18-May-2016
H3A1020	Install Sediment and Erosion Perimeter Controls	15d	28-Apr-2016	18-May-2016
H3A1040	Install Jacked and Bore Crossings (5 Ea)	60d	19-May-2016	12-Aug-2016
H3A1050	Construct BioRetension Basin for Phase 1 E&S Controls	15d	19-May-2016	09-Jun-2016
H3A1030	Install Median Drainage Manholes and Pipe	50d	01-Jul-2016	12-Sep-2016
H3A1230	Demo Existing Shoulders Following Bulk of Drainage Work	15d	25-Jul-2016	12-Aug-2016
H3A1232	Bulk Excavation Area 1	30d	15-Aug-2016	26-Sep-2016
H3A1234	Perform Subgrade Stabilization Area 1	45d	15-Aug-2016	17-Oct-2016
H3A1240	Fine Grade Roadway and Shoulder Areas	22d	27-Sep-2016	26-Oct-2016
H3A1250	Install Cement Treated Aggregate Base in Roadway/Shoulder	20d	18-Oct-2016	14-Nov-2016
H3A1260	Install Underdrain UD-4	15d	27-Oct-2016	16-Nov-2016
H3A1265	Install Open Graded Drainage Layer	10d	17-Nov-2016	02-Dec-2016
H3A1270	Install Base Asphalt Roadway (New Lane and Shoulder)	24d	05-Dec-2016	10-Jan-2017
H3A1280	Install Intermediate Asphalt (New Lane and Shoulder)	7d	11-Jan-2017	19-Jan-2017
H3A1245	Install MB-7F Median Barrier	25d	11-Jan-2017	14-Feb-2017
H3A1320	Install MB-3 Guardrail as Required	20d	20-Jan-2017	16-Feb-2017
H3A1330	Final Dress-up of Slopes and Seed	5d	17-Feb-2017	23-Feb-2017
H3A1340	Temp Pavement Markings for Phase 3 Construction	8d	24-Feb-2017	07-Mar-2017
H3A1350	End Phase 2 Area 1 and Remove Barriers	5d	08-Mar-2017	14-Mar-2017
STAGE 1 BRIDGES B-620 & B-621 over LEE HALL RESERVOIR		123d	19-May-2016	10-Nov-2016
H3A2000	Lane Shift Complete/Bridge Plans Approved	0d	19-May-2016	
H3A2010	Sawcut Existing Deck	1d	19-May-2016	19-May-2016
H3A2020	Remove Parapet and Existing Deck Portion	12d	20-May-2016	06-Jun-2016
H3A2030	Remove two Existing Girder Lines (8 total)	5d	07-Jun-2016	13-Jun-2016
H3A2040	Install Shoring as Required at Existing Abutment	5d	14-Jun-2016	20-Jun-2016
H3A2050	Access to Existing Piers/Turbidity Curtains	5d	21-Jun-2016	27-Jun-2016
H3A2060	Excavate / Grade Abutment Ftgs	3d	21-Jun-2016	23-Jun-2016
H3A2070	Drive Abutment Piling	5d	24-Jun-2016	30-Jun-2016
H3A2090	FRP Footing Abutment	5d	01-Jul-2016	08-Jul-2016
H3A2080	Drive Bent I Piling	3d	01-Jul-2016	06-Jul-2016
H3A2100	FRP Stem & Wing Abutments	8d	11-Jul-2016	20-Jul-2016
H3A2110	FRP Bent I Cap	8d	21-Jul-2016	01-Aug-2016
H3A2120	Install Slope Protection at Abutments	3d	02-Aug-2016	04-Aug-2016
H3A2130	Set Bearings	1d	05-Aug-2016	05-Aug-2016
H3A2140	Set PCBT Girders	3d	05-Aug-2016	09-Aug-2016
H3A2150	Diaphrams PCBT Girders	5d	10-Aug-2016	16-Aug-2016
H3A2160	FRP Integral Backwall Abutments	12d	17-Aug-2016	01-Sep-2016
H3A2170	Install Overhangs	5d	02-Sep-2016	09-Sep-2016
H3A2180	Install SIP Deck Forms	5d	12-Sep-2016	16-Sep-2016
H3A2190	FRP Deck	10d	19-Sep-2016	30-Sep-2016

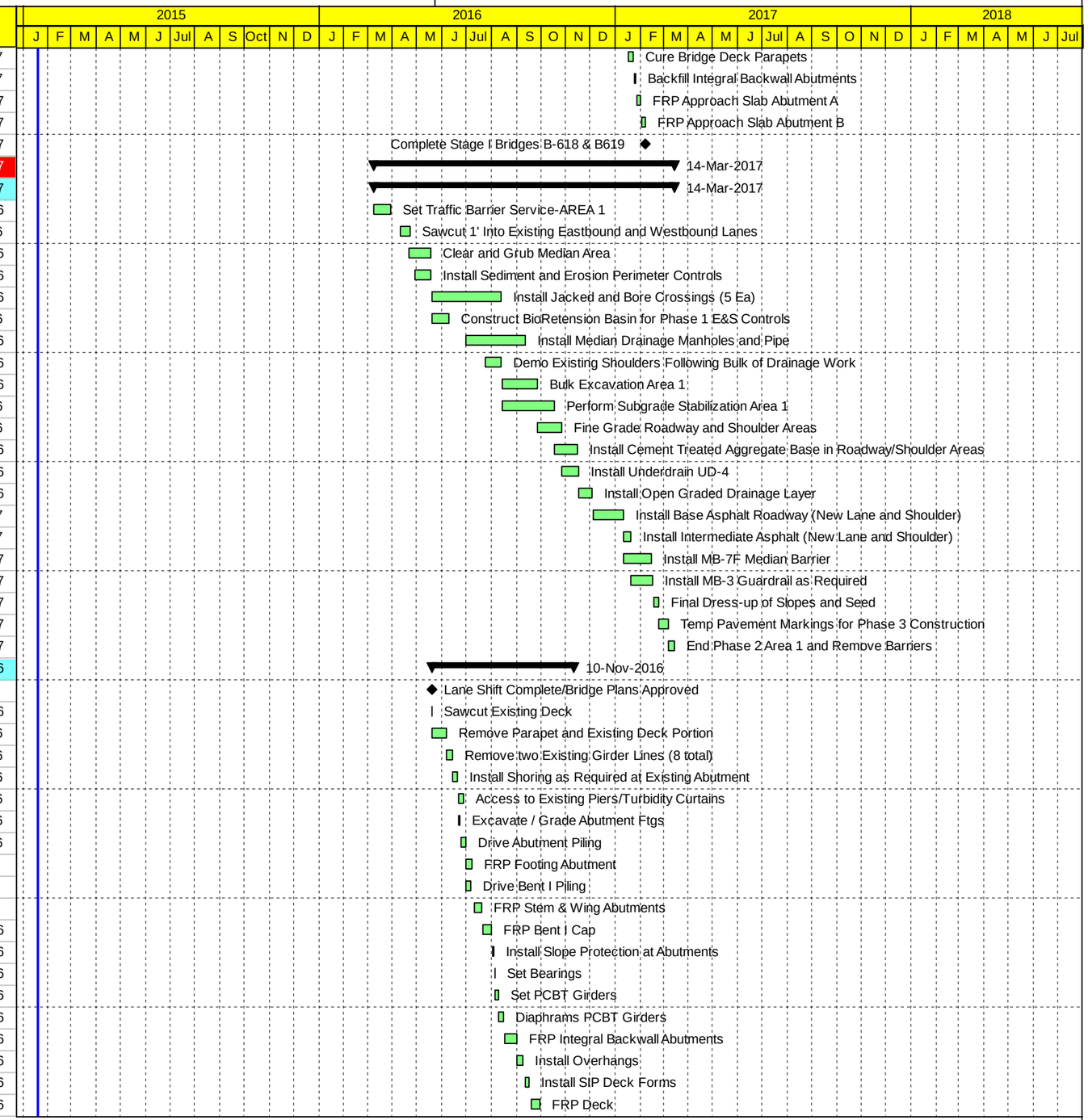

Remaining Level of Effort | Finish Milesone | Remaining Work | Summary
Start Milestone | Actual Work | Critical Remaining Work

SHIRLEY CONTRACTING COMPANY, LLC

I-64 CAPACITY IMPROVEMENTS SEGMENT 1

4.7 PROPOSAL SCHEDULE

SUBMISSION: December 2, 2014

Activity ID	Activity Name	Original Duration	Start	Finish
H3A2200	Cure Deck	8d	03-Oct-2016	12-Oct-2016
H3A2210	FRP Bridge Deck Parapets	5d	13-Oct-2016	19-Oct-2016
H3A2220	Cure Bridge Deck Parapets	5d	20-Oct-2016	26-Oct-2016
H3A2230	Backfill Integral Backwall Abutments	3d	27-Oct-2016	31-Oct-2016
H3A2240	FRP Approach Slab Abutment A	4d	01-Nov-2016	04-Nov-2016
H3A2250	FRP Approach Slab Abutment B	4d	07-Nov-2016	10-Nov-2016
H3A2260	Complete Stage I Bridges B-620 & B-621	0d		10-Nov-2016
AREA 3 - 1688+00 to 1782+40 (9,440 LF)		273d	25-Apr-2016	22-May-2017
AREA 3 - I-64 EASTBOUND and WESTBOUND INSIDE WIDENING		273d	25-Apr-2016	22-May-2017
H3C1000	Set Traffic Barriers Area 3	20d	25-Apr-2016	20-May-2016
H3C1005	Set MOT and Traffic Control Devices	15d	23-May-2016	13-Jun-2016
H3B1210	Sawcut 1' Into Existing Eastbound and Westbound Lanes	10d	14-Jun-2016	27-Jun-2016
H3B1220	Clear and Grub Median Area	20d	14-Jun-2016	12-Jul-2016
H3B1230	Install Sediment and Erosion Perimeter Controls	15d	21-Jun-2016	12-Jul-2016
H3B1250	Install Median Drainage Manholes and Pipe	45d	13-Jul-2016	14-Sep-2016
H3B1280	Demo Existing Shoulders Following Bulk of Drainage Work	15d	03-Aug-2016	23-Aug-2016
H3B1260	Install Jacked and Bore Crossings (6 Ea)	72d	15-Aug-2016	23-Nov-2016
H3B1270	Construct BioRetension Basins for Phase 1 E&S Controls	22d	15-Aug-2016	14-Sep-2016
H3B1290	Bulk Excavation Area 2	35d	27-Sep-2016	14-Nov-2016
H3B1300	Perform Subgrade Stabilization Area 2	35d	18-Oct-2016	07-Dec-2016
H3B1310	Fine Grade Roadway and Shoulder Areas	25d	15-Nov-2016	21-Dec-2016
H3B1320	Install Cement Treated Aggregate Base in Roadway/Shoulder	25d	08-Dec-2016	23-Jan-2017
H3B1330	Install Underdrain UD-4	18d	04-Jan-2017	27-Jan-2017
H3B1340	Install Open Graded Drainage Layer	13d	30-Jan-2017	15-Feb-2017
H3B1350	Install Base Asphalt Roadway (New Lane and Shoulder)	20d	16-Feb-2017	15-Mar-2017
H3B1360	Install Intermediate Asphalt (New Lane and Shoulder)	10d	16-Mar-2017	29-Mar-2017
H3B1370	Install MB-7F Median Barrier	25d	16-Mar-2017	19-Apr-2017
H3B1380	Install MB-3 Guardrail as Required	20d	30-Mar-2017	26-Apr-2017
H3B1390	Final Dress-up of Slopes and Seed	5d	27-Apr-2017	03-May-2017
H3B1400	Temp Pavement Markings for Phase 3 Construction	8d	04-May-2017	15-May-2017
H3B1410	End Phase 2 and Shift Traffic to Phase 3	5d	16-May-2017	22-May-2017
TRIPLE BOX CULVERT D-601 / D-602 (STA 1742+04		62d	13-Jul-2016	07-Oct-2016
H3C2000	Mobilize Box Culvert Crew	3d	13-Jul-2016	15-Jul-2016
H3C2010	Excavate / Shore Box Culvert	12d	20-Jul-2016	04-Aug-2016
H3C2020	Demolish Exisitng Wing Walls	3d	05-Aug-2016	09-Aug-2016
H3C2030	Place Bedding Stone	3d	10-Aug-2016	12-Aug-2016
H3C2040	FPS Box Inverts Sections	12d	15-Aug-2016	30-Aug-2016
H3C2050	FPS Box Barrell Sections	20d	31-Aug-2016	28-Sep-2016
H3C2060	Waterproof Joints / Backfill	7d	29-Sep-2016	07-Oct-2016
H3C2070	Complete Box Culvert	0d		07-Oct-2016
PHASE 3 - STAGE 2 BRIDGES, NOISEWALLS & PAVEMENT REPAIRS		243d	11-Nov-2016	27-Oct-2017
STAGE 2 BRIDGES B-620 & B-621 over LEE HALL RESERVOIR		116d	11-Nov-2016	28-Apr-2017
H421000	Install Bolt-DownTemporary Bridge Barrier - Stage 2	4d	11-Nov-2016	16-Nov-2016
H421020	Remove Exiisting Bridge Joints and Deck Portions	15d	17-Nov-2016	09-Dec-2016
H421025	FRP Integral Backwalls at Abutment Locations	22d	12-Dec-2016	13-Jan-2017
H421030	FPS Closure Pours for Jointless Deck	25d	16-Jan-2017	17-Feb-2017
H421040	Mill Existing Bridge Deck Surface	5d	20-Feb-2017	24-Feb-2017
H421050	Overlay Existing Bridge Deck	15d	20-Mar-2017	07-Apr-2017
H421120	Perform Substructure Repairs	30d	20-Mar-2017	28-Apr-2017

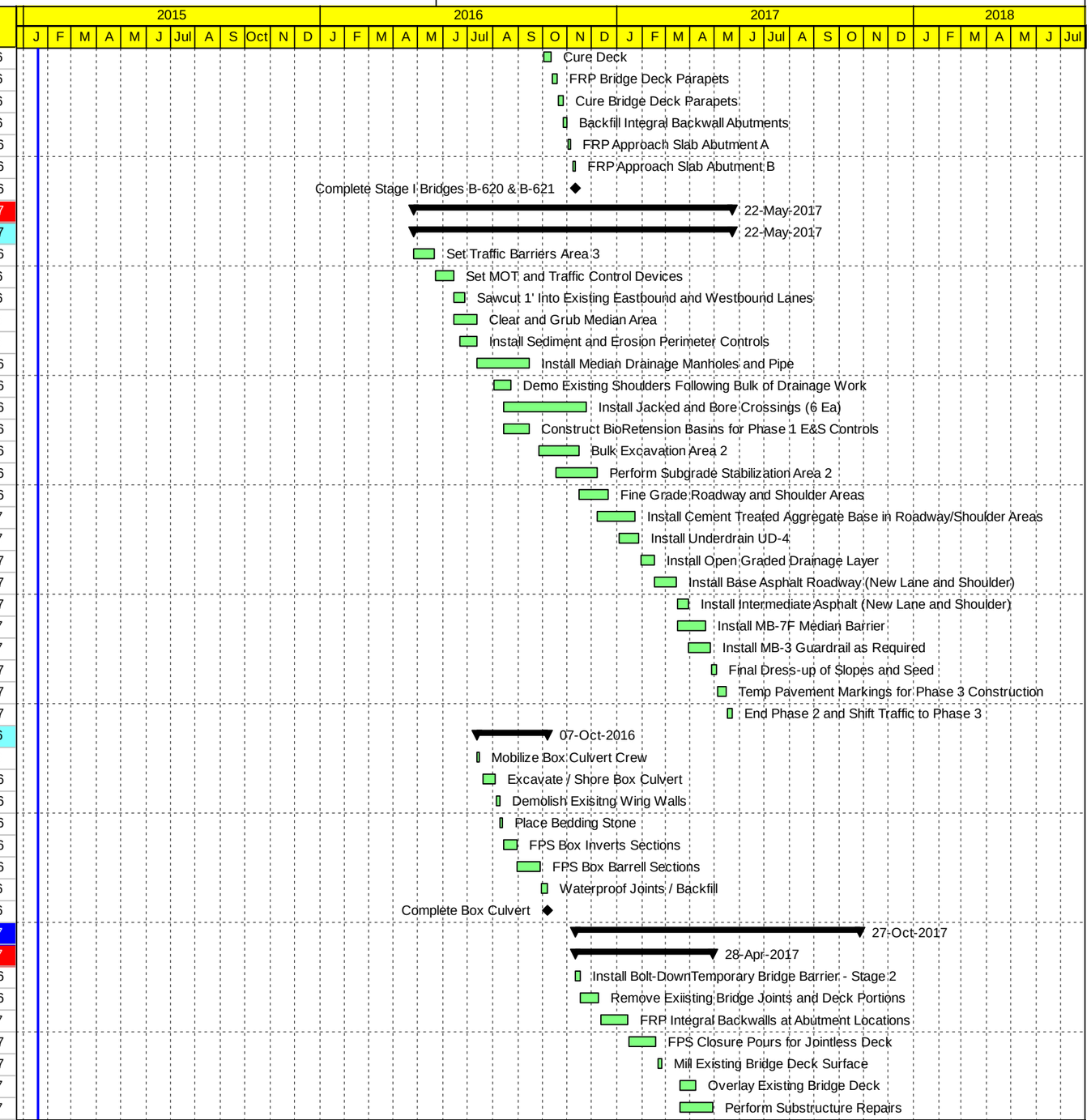

Remaining Level of Effort | Finish Milesone | Remaining Work | Summary
Start Milestone | Actual Work | Critical Remaining Work

SHIRLEY CONTRACTING COMPANY, LLC

I-64 CAPACITY IMPROVEMENTS SEGMENT 1

4.7 PROPOSAL SCHEDULE

SUBMISSION: December 2, 2014

Activity ID	Activity Name	Original Duration	Start	Finish
H421520	Complete Bridge B-620 & B-621 over LEE HALL RESERVOII	0d		28-Apr-2017
STAGE 2 BRIDGES B-618 & B-619 over FORT EUSTIS BLVD		99d	08-Feb-2017	27-Jun-2017
H431000	Install Bolt-DownTemporary Bridge Barrier - Stage 2	4d	08-Feb-2017	13-Feb-2017
H431010	Remove Exiisting Bridge Joints and Deck Portions	15d	14-Feb-2017	06-Mar-2017
H431020	FRP Integral Backwalls at Abutment Locations	22d	07-Mar-2017	05-Apr-2017
H431030	FPS Closure Pours for Jointless Deck	25d	06-Apr-2017	10-May-2017
H431040	Mill Existing Bridge Deck Surface	4d	11-May-2017	16-May-2017
H431050	Overlay Existing Bridge Deck	20d	17-May-2017	14-Jun-2017
H431060	Perform Substructure Repairs	29d	17-May-2017	27-Jun-2017
H431070	Complete Bridge B-618 & B-619 over FORT EUSTIS BLVD	0d		27-Jun-2017
STAGE 2 BRIDGES B-616 & B-617 over INDUSTRIAL PARK DR/CSX		166d	03-Jan-2017	24-Aug-2017
H3B3025	Set Protection Measures for CSX RR	10d	03-Jan-2017	16-Jan-2017
H441000	Install Bolt-DownTemporary Bridge Barrier - Stage 2	5d	10-Jan-2017	16-Jan-2017
H3B3300	Demolish Parapet and Remaining Existing Deck	10d	17-Jan-2017	30-Jan-2017
H3B3310	Remove two Existing Girder Lines (20 total)	4d	31-Jan-2017	03-Feb-2017
H3B3320	Install Shoring as Required at Existing Abutment	10d	06-Feb-2017	17-Feb-2017
H3B3325	Demolsih Existing Piers	8d	06-Feb-2017	15-Feb-2017
H3B3330	Shoring at Pier	5d	20-Feb-2017	24-Feb-2017
H3B3340	Excavate / Grade Abutment Ftgs	6d	20-Feb-2017	27-Feb-2017
H3B3350	Drive Abutment Piling	5d	28-Feb-2017	06-Mar-2017
H3B3360	Excavate Pier Footings	7d	28-Feb-2017	08-Mar-2017
H3B3370	FRP Footing Abutment	5d	09-Mar-2017	15-Mar-2017
H3B3380	Drive Pier Piling	10d	09-Mar-2017	22-Mar-2017
H3B3390	FRP Stem & Wing Abutments	14d	16-Mar-2017	04-Apr-2017
H3B3400	FRP Pier Footings	8d	05-Apr-2017	14-Apr-2017
H3B3410	FRP Pier Columns and Cap	15d	17-Apr-2017	05-May-2017
H3B3420	Install Slope Protection at Abutments	4d	08-May-2017	11-May-2017
H3B3430	Set Bearings	2d	10-May-2017	11-May-2017
H3B3440	Erect New PCBT Girders	6d	10-May-2017	17-May-2017
H3B3450	FRP Diaphrams	8d	18-May-2017	30-May-2017
H3B3460	FRP Integral Backwall Abutments	10d	31-May-2017	13-Jun-2017
H3B3470	Install Overhangs	5d	14-Jun-2017	20-Jun-2017
H3B3480	Install SIP Deck Forms	5d	21-Jun-2017	27-Jun-2017
H3B3490	FRP Deck	15d	28-Jun-2017	19-Jul-2017
H3B3500	Cure Deck	5d	20-Jul-2017	26-Jul-2017
H3B3510	FRP Bridge Deck Parapets	5d	27-Jul-2017	02-Aug-2017
H3B3520	Cure Bridge Deck Parapets	5d	03-Aug-2017	09-Aug-2017
H3B3530	Backfill Integral Backwall Abutments	3d	10-Aug-2017	14-Aug-2017
H3B3540	FRP Approach Slab Abutment A	4d	15-Aug-2017	18-Aug-2017
H3B3550	FRP Approach Slab Abutment B	4d	21-Aug-2017	24-Aug-2017
H3B3560	Complete Stage 2 Bridges B-616 & B617	0d		24-Aug-2017
NOISEWALL CONSTRUCTION		206d	10-Jan-2017	27-Oct-2017
NOISEWALL #46 - I-64 WB 2611+00 to 2652+00 (4,100 LF)		112d	10-Jan-2017	15-Jun-2017
H451000	Clear, Grub , and Grade for Noisewall #1	13d	10-Jan-2017	26-Jan-2017
H451010	Foundations and Set Posts Noisewall #1	36d	17-Jan-2017	07-Mar-2017
H451020	Pour Steps and Grade for Panels	10d	08-Mar-2017	21-Mar-2017
H451030	Set Panels Noisewall #1	35d	22-Mar-2017	09-May-2017
H451040	Backfill Behind Wall and Ditch Grading	15d	10-May-2017	31-May-2017
H451050	Grade in Front of Walls	8d	01-Jun-2017	12-Jun-2017

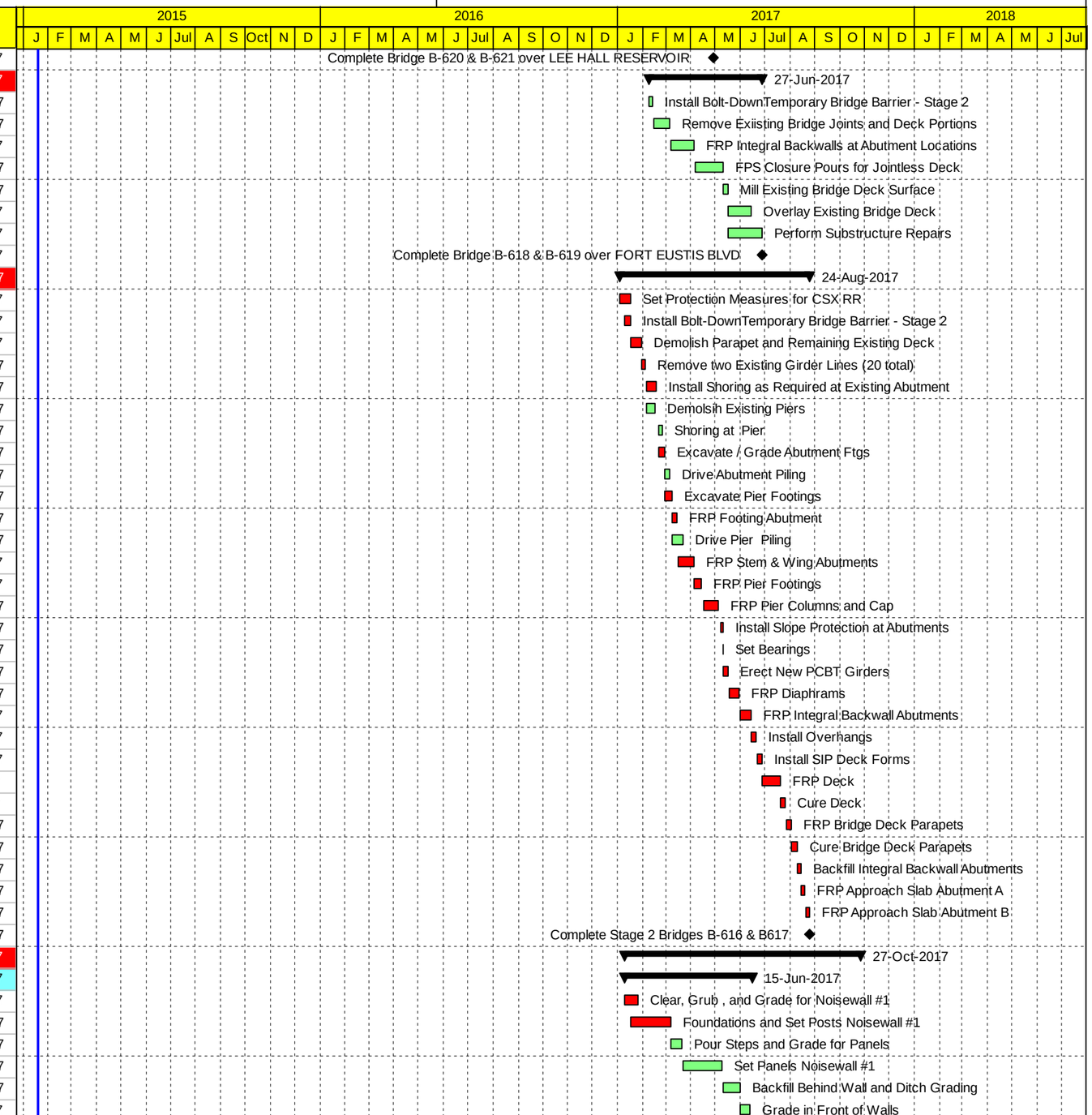

Remaining Level of Effort | Finish Milesone | Remaining Work | Summary
Start Milestone | Actual Work | Critical Remaining Work

SHIRLEY CONTRACTING COMPANY, LLC

I-64 CAPACITY IMPROVEMENTS SEGMENT 1

4.7 PROPOSAL SCHEDULE

SUBMISSION: December 2, 2014

Activity ID	Activity Name	Original Duration	Start	Finish
H451060	Seed and Stabilize	3d	13-Jun-2017	15-Jun-2017
NOISEWALL #47/48 - I-64 WB 2684+00 to 2755+15 (7,115 LF)		193d	27-Jan-2017	27-Oct-2017
H452000	Clear, Grub , and Grade for Noisewall #2	20d	27-Jan-2017	23-Feb-2017
H452010	Foundations and Set Posts Noisewall #2	50d	08-Mar-2017	16-May-2017
H452020	Pour Steps and Grade for Panels	20d	26-Apr-2017	23-May-2017
H452030	Set Panels Noisewall #2	60d	24-May-2017	17-Aug-2017
H452040	Backfill Behind Wall and Ditch Grading	30d	18-Aug-2017	29-Sep-2017
H452050	Grade in Front of Walls	15d	02-Oct-2017	20-Oct-2017
H452060	Seed and Stabilize	5d	23-Oct-2017	27-Oct-2017
PHASE 3 - I-64 EASTBOUND & WESTBOUND CONCRETE PAVEMENT		160d	10-Jan-2017	23-Aug-2017
H411000	Set MOT for Phase 3 Work and I-64 Pavement Repairs	5d	10-Jan-2017	16-Jan-2017
H411005	Area 1 Pavement Repairs	45d	15-Mar-2017	17-May-2017
H411030	Area 2 Pavement Repairs	45d	08-May-2017	10-Jul-2017
H411040	Area 3 Pavement Repairs	40d	28-Jun-2017	23-Aug-2017
PHASE 3 - OUTSIDE SHOULDER STRENGTHENING		58d	27-Jul-2017	17-Oct-2017
EASTBOUND SHOULDERS FT EUSTIS to EASTERN TERMINUS of F		43d	27-Jul-2017	26-Sep-2017
H461000	Mill Eastbound Shoulders	15d	27-Jul-2017	16-Aug-2017
H461010	Base Pave Eastbound Shoulders	15d	27-Jul-2017	16-Aug-2017
H461020	Intermediate Pave Eastbound Shoulders	10d	08-Aug-2017	21-Aug-2017
H461030	Repair Guardrail as Necessary Eastbound Shoulders	25d	22-Aug-2017	26-Sep-2017
H461035	OPEN NEW EASTBOUND TRAVEL LANES	0d	25-Aug-2017	
WESTBOUND SHOULDERS FT EUSTIS to EASTERN TERMINUS of		43d	17-Aug-2017	17-Oct-2017
H461040	Mill Westbound Shoulders	15d	17-Aug-2017	07-Sep-2017
H461050	Base Pave Westbound Shoulders	15d	17-Aug-2017	07-Sep-2017
H461060	Intermediate Pave Westbound Shoulders	10d	29-Aug-2017	12-Sep-2017
H461065	OPEN NEW WESTBOUND TRAVEL LANES	1d	13-Sep-2017	13-Sep-2017
H461070	Repair Guardrail as Necessary Westbound Shoulders	25d	13-Sep-2017	17-Oct-2017
PHASE 4 - FINAL THMACO OVERLAY and OPEN LANES		65d	28-Jul-2017	27-Oct-2017
H51030	Complete Roadway Signage	40d	28-Jul-2017	22-Sep-2017
H51000	THMACO Overlay I-64 Eastbound Lanes	20d	25-Aug-2017	22-Sep-2017
H51005	Permanent Pavement Markings and Snow Plowable Markers	20d	01-Sep-2017	29-Sep-2017
H51010	THMACO Overlay I-64 Westbound Lanes	20d	25-Sep-2017	20-Oct-2017
H51020	Permanent Pavement Markings and Snow Plowable Markers	20d	02-Oct-2017	27-Oct-2017
OPTION 1 - ADDITIONAL PAVEMENT OVERLAY		40d	30-Aug-2017	25-Oct-2017
H61000	Additional 2" SMA-12.5" Surface Asphalt I-64 Eastbound Lar	20d	30-Aug-2017	27-Sep-2017
H61010	Additional 2" SMA-12.5" Surface Asphalt I-64 Westbound La	20d	28-Sep-2017	25-Oct-2017
OPTION 2 - ADDITIONAL ROADWAY EXPANSION to FORT EUSTIS RAMPS		89d	10-Jan-2017	12-May-2017
H7100	Set Traffic Barrier Service at Ramp Extensions	10d	10-Jan-2017	23-Jan-2017
H7110	Sawcut Exisitng Travel Lane for Tie-ins	5d	24-Jan-2017	30-Jan-2017
H7105	Clear and Grub as Required	10d	24-Jan-2017	06-Feb-2017
H7120	Demolish and Remove Old Shoulder Pavements	15d	31-Jan-2017	20-Feb-2017
H7130	Excavate and Soil Remediation as Required	25d	21-Feb-2017	27-Mar-2017
H7180	Drainage Improvements	20d	21-Feb-2017	20-Mar-2017
H7140	Aggregate Base	15d	28-Mar-2017	17-Apr-2017
H7150	Underdrain	8d	18-Apr-2017	27-Apr-2017
H7160	Base Asphalt	6d	28-Apr-2017	05-May-2017
H7170	Intermediate Asphalt	5d	08-May-2017	12-May-2017

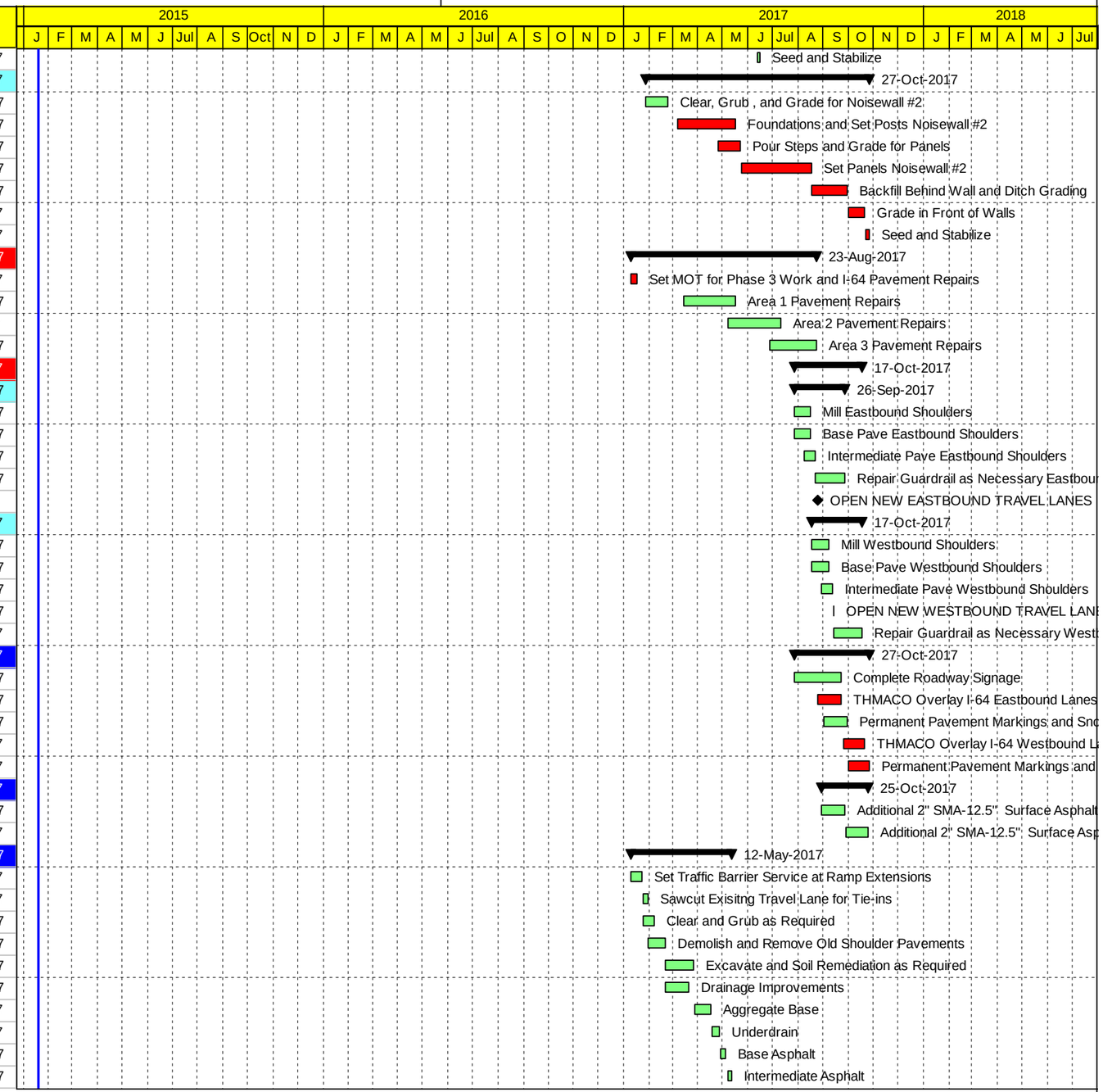

Remaining Level of Effort | Finish Milesone | Remaining Work | Summary
Start Milestone | Actual Work | Critical Remaining Work

SHIRLEY CONTRACTING COMPANY, LLC

I-64 CAPACITY IMPROVEMENTS SEGMENT 1

4.7 PROPOSAL SCHEDULE
CRITICAL PATH

SUBMISSION: December 2, 2014

Activity ID	Activity Name	Original Duration	Start	Finish
I-64 CAPACITY IMPROVEMENTS SEGMENT 1		687d	18-Mar-2015	01-Dec-2017
Contract: C00104905DB75 I-64 CAPACITY IMPROVEMENTS SEGMENT		687d	18-Mar-2015	01-Dec-2017
SCHEDULE MILESTONES		687d	18-Mar-2015	01-Dec-2017
A1030	NOTICE TO PROCEED (03/18/2015)	0d	18-Mar-2015*	
A1120	PROJECT READY FOR FINAL WALKTHROUGH	0d		28-Oct-2017
A1130	COMPLETE VDOT PUNCHLIST	35d	28-Oct-2017	01-Dec-2017
A1140	FINAL COMPLETION	0d		01-Dec-2017
DESIGN PHASE		160d	18-Mar-2015	01-Nov-2015
PRELIMINARY DESIGN WORK		33d	18-Mar-2015	01-May-2015
BA1020	BASE MAPPING/FIELD SURVEY	45d	18-Mar-2015	01-May-2015
ROADWAY DESIGN		113d	17-Apr-2015	25-Sep-2015
BB2000	PREPARE ROADWAY PLANS (1ST SUBMISSION)	72d	17-Apr-2015	27-Jun-2015
BB2020	DESIGN QA/QC (1ST SUBMISSION)	5d	28-Jun-2015	02-Jul-2015
BB2040	SUBMIT ROADWAY PLANS (1ST SUBMISSION)	0d	03-Jul-2015	
BB2060	VDOT/FHWA REVIEW/COMMENT ROADWAY PLANS (1ST	21d	03-Jul-2015	23-Jul-2015
BB2080	PREPARE ROADWAY PLANS (2ND SUBMISSION)	43d	19-Jul-2015	30-Aug-2015
BB2100	DESIGN QA/QC (2ND SUBMISSION)	5d	31-Aug-2015	04-Sep-2015
BB2120	SUBMIT ROADWAY PLANS (2ND SUBMISSION)	0d	05-Sep-2015	
BB2140	VDOT/FHWA REVIEW/COMMENT ROADWAY PLANS (2ND	21d	05-Sep-2015	25-Sep-2015
BRIDGE DESIGN		130d	29-Apr-2015	01-Nov-2015
BC3008	SUBMIT PRELIMINARY BRIDGE DESIGNS (STAGE I)	60d	29-Apr-2015	27-Jun-2015
BC3020	VDOT/FHWA REVIEW/COMMENT BRIDGE PRELIMINARY	21d	28-Jun-2015	18-Jul-2015
BC3040	PREPARE BRIDGE PLANS (1ST SUBMISSION)	45d	14-Jul-2015	27-Aug-2015
BC3060	DESIGN QA/QC (1ST SUBMISSION)	5d	28-Aug-2015	01-Sep-2015
BC3080	SUBMIT BRIDGE PLANS (1ST SUBMISSION)	0d	02-Sep-2015	
BC3100	VDOT/FHWA REVIEW/COMMENT BRIDGE PLANS (1ST S	21d	02-Sep-2015	22-Sep-2015
BC3120	PREPARE FINAL BRIDGE PLANS	40d	23-Sep-2015	01-Nov-2015
PUBLIC INVOLVEMENT		526d	01-Oct-2015	27-Oct-2017
C2010	PRECONSTRUCTION PUBLIC INFORMATION MEETING	30d	01-Oct-2015	30-Oct-2015
C2020	PUBLIC INFO MTGS/WEBSITE UPDATES/ SOCIAL MEDIA	728d	31-Oct-2015	27-Oct-2017
ENVIRONMENTAL PERMITTING		90d	02-Nov-2015	14-Mar-2016
D2060	*CORPS OF ENGINEERS INDIVIDUAL PERMIT	90d	02-Nov-2015	11-Mar-2016
D2070	*VIRGINIA WATER PROTECTION INDIVIDUAL PERMIT	90d	02-Nov-2015	11-Mar-2016
D2090	ENVIRONMENTAL PERMITTING COMPLETE	0d	14-Mar-2016	
CONSTRUCTION		529d	25-Sep-2015	27-Oct-2017
PRE-CONSTRUCTION, SUBMITTALS and MATERIAL PROCUREMENT		529d	25-Sep-2015	27-Oct-2017
QUALITY ASSURANCE / QUALITY CONTROL PROCESS		529d	25-Sep-2015	27-Oct-2017
H1A1005	QA/QC PREPARATORY MEETING - GRADING & DRAINAG	5d	25-Sep-2015	02-Oct-2015
H1A1000	QA/QC INSPECTIONS / REPORTING / AS-BUILTS	529d	25-Sep-2015	27-Oct-2017
PHASE 2 - I-64 NEW INSIDE LANES & 1ST PHASE OF BRIDGES		208d	14-Mar-2016	09-Jan-2017
AREA 2 - 1585+00 to 1688+00(10,300 LF)		208d	14-Mar-2016	09-Jan-2017
AREA 2 - I-64 EASTBOUND and WESTBOUND INSIDE WIDENING		208d	14-Mar-2016	09-Jan-2017
H3B1000	Sawcut 1' Into Existing Eastbound and Westbound Lanes	5d	14-Mar-2016	18-Mar-2016
H3B1010	Clear and Grub Median Area	15d	21-Mar-2016	08-Apr-2016
H3B1030	Install Sediment and Erosion Perimeter Controls	10d	07-Apr-2016	20-Apr-2016
H3B1020	Clear and Grub Fort Eustis Interchange Ramp Areas as Req	8d	11-Apr-2016	20-Apr-2016
H3B1040	Install Median Drainage Manholes and Pipe	50d	21-Apr-2016	30-Jun-2016

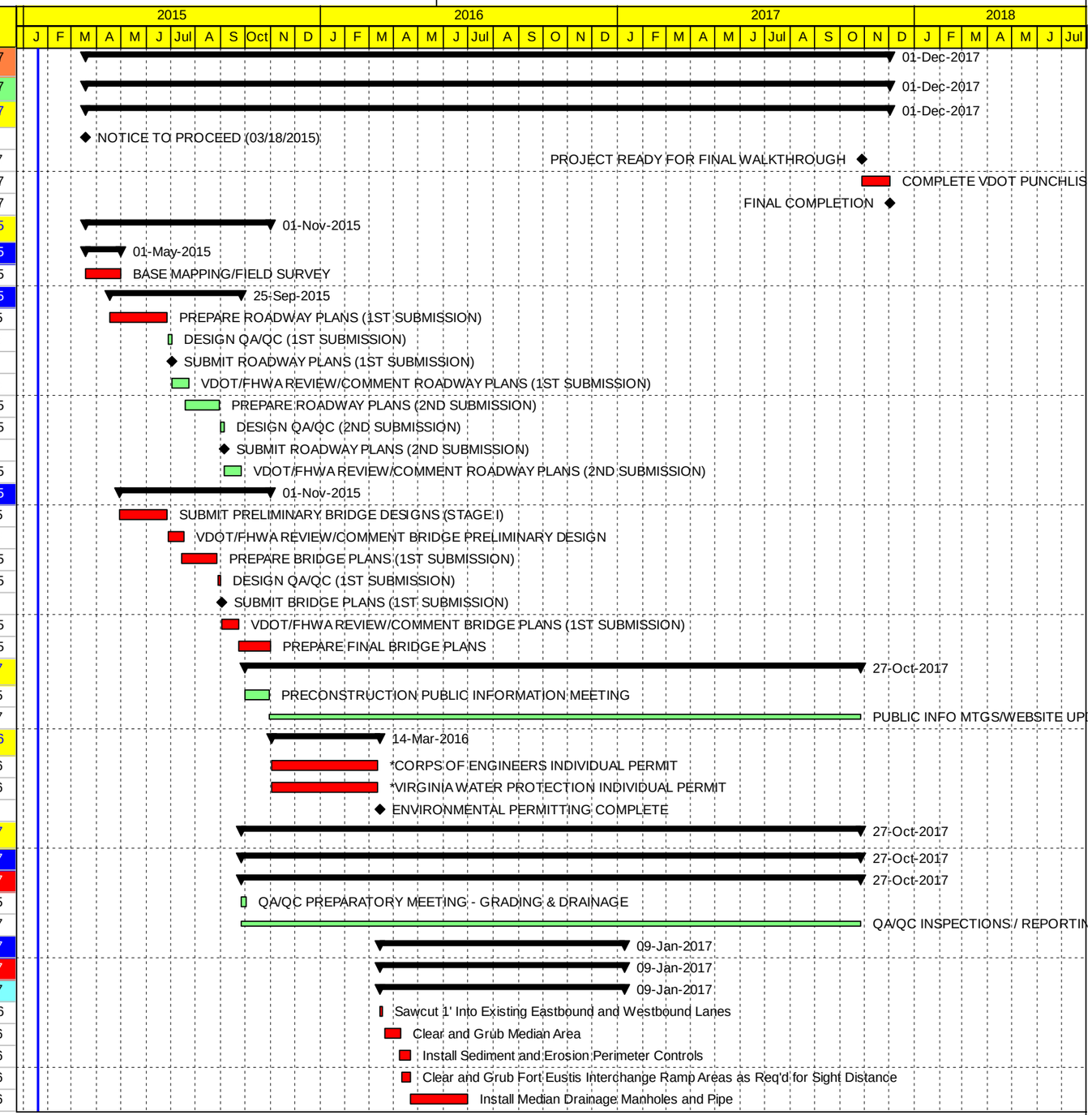

Remaining Level of Effort | Finish Milesone | Remaining Work | Summary
Start Milestone | Actual Work | Critical Remaining Work

SHIRLEY CONTRACTING COMPANY, LLC

I-64 CAPACITY IMPROVEMENTS SEGMENT 1

4.7 PROPOSAL SCHEDULE
CRITICAL PATH

SUBMISSION: December 2, 2014

Activity ID	Activity Name	Original Duration	Start	Finish
H3B1070	Demo Existing Shoulders Following Bulk of Drainage Work	15d	12-May-2016	02-Jun-2016
H3B1080	Bulk Excavation Area 2	35d	03-Jun-2016	22-Jul-2016
H3B1100	Fine Grade Roadway and Shoulder Areas	20d	25-Jul-2016	19-Aug-2016
H3B1110	Install Cement Treated Aggregate Base in Roadway/Shoulder	20d	15-Aug-2016	12-Sep-2016
H3B1120	Install Underdrain UD-4	15d	24-Aug-2016	14-Sep-2016
H3B1130	Install Open Graded Drainage Layer	10d	15-Sep-2016	28-Sep-2016
H3B1140	Install Base Asphalt Roadway (New Lane and Shoulder)	20d	29-Sep-2016	26-Oct-2016
H3B1150	Install Intermediate Asphalt (New Lane and Shoulder)	10d	27-Oct-2016	09-Nov-2016
H3B1170	Install MB-3 Guardrail as Required	20d	10-Nov-2016	09-Dec-2016
H3B1180	Final Dress-up of Slopes and Seed	5d	12-Dec-2016	16-Dec-2016
H3B1190	Temp Pavement Markings for Phase 3 Construction	8d	19-Dec-2016	30-Dec-2016
H3B1200	End Phase 2 Area 2 and Remove Barriers	5d	03-Jan-2017	09-Jan-2017
STAGE 1 BRIDGES B-616 & B-617 over INDUSTRIAL PARK DR/CSX		180d	21-Apr-2016	09-Jan-2017
H3B3005	Lane Shift Complete/Bridge Plans Approved	5d	21-Apr-2016	27-Apr-2016
H3B3010	Sawcut Existing Deck	10d	28-Apr-2016	11-May-2016
H3B3015	Set Protection Measures for CSX RR	5d	12-May-2016	18-May-2016
H3B3020	Remove Parapet and Existing Deck Portion	12d	19-May-2016	03-Jun-2016
H3B3030	Remove two Existing Girder Lines (12 total)	5d	06-Jun-2016	10-Jun-2016
H3B3040	Install Shoring as Required at Existing Abutment	5d	13-Jun-2016	17-Jun-2016
H3B3060	Excavate / Grade Abutment Ftgs	6d	20-Jun-2016	27-Jun-2016
H3B3080	Excavate Pier Footings	7d	28-Jun-2016	07-Jul-2016
H3B3090	FRP Footing Abutment	5d	08-Jul-2016	14-Jul-2016
H3B3110	FRP Stem & Wing Abutments	14d	15-Jul-2016	03-Aug-2016
H3B3120	FRP Pier Footings	8d	04-Aug-2016	15-Aug-2016
H3B3130	FRP Pier Columns and Cap	20d	16-Aug-2016	13-Sep-2016
H3B3140	Install Slope Protection at Abutments	4d	14-Sep-2016	19-Sep-2016
H3B3150	Set Bearings	3d	15-Sep-2016	19-Sep-2016
H3B3160	Erect New PCBT Girders	6d	15-Sep-2016	22-Sep-2016
H3B3170	FRP Diaphrams	8d	23-Sep-2016	04-Oct-2016
H3B3180	FRP Integral Backwall Abutments	10d	05-Oct-2016	18-Oct-2016
H3B3190	Install Overhangs	5d	19-Oct-2016	25-Oct-2016
H3B3200	Install SIP Deck Forms	5d	26-Oct-2016	01-Nov-2016
H3B3210	FRP Deck	15d	02-Nov-2016	22-Nov-2016
H3B3220	Cure Deck	8d	23-Nov-2016	06-Dec-2016
H3B3230	FRP Bridge Deck Parapets	5d	07-Dec-2016	13-Dec-2016
H3B3240	Cure Bridge Deck Parapets	5d	14-Dec-2016	20-Dec-2016
H3B3250	Backfill Integral Backwall Abutments	3d	21-Dec-2016	27-Dec-2016
H3B3260	FRP Approach Slab Abutment A	4d	28-Dec-2016	03-Jan-2017
H3B3270	FRP Approach Slab Abutment B	4d	04-Jan-2017	09-Jan-2017
H3B3280	Complete Stage I Bridges B-616 & B617	0d		09-Jan-2017
PHASE 3 - STAGE 2 BRIDGES, NOISEWALLS & PAVEMENT REPAIRS		211d	03-Jan-2017	27-Oct-2017
STAGE 2 BRIDGES B-616 & B-617 over INDUSTRIAL PARK DR/CSX		166d	03-Jan-2017	24-Aug-2017
H3B3025	Set Protection Measures for CSX RR	10d	03-Jan-2017	16-Jan-2017
H441000	Install Bolt-DownTemporary Bridge Barrier - Stage 2	5d	10-Jan-2017	16-Jan-2017
H3B3300	Demolish Parapet and Remaining Existing Deck	10d	17-Jan-2017	30-Jan-2017
H3B3310	Remove two Existing Girder Lines (20 total)	4d	31-Jan-2017	03-Feb-2017
H3B3320	Install Shoring as Required at Existing Abutment	10d	06-Feb-2017	17-Feb-2017
H3B3340	Excavate / Grade Abutment Ftgs	6d	20-Feb-2017	27-Feb-2017
H3B3360	Excavate Pier Footings	7d	28-Feb-2017	08-Mar-2017

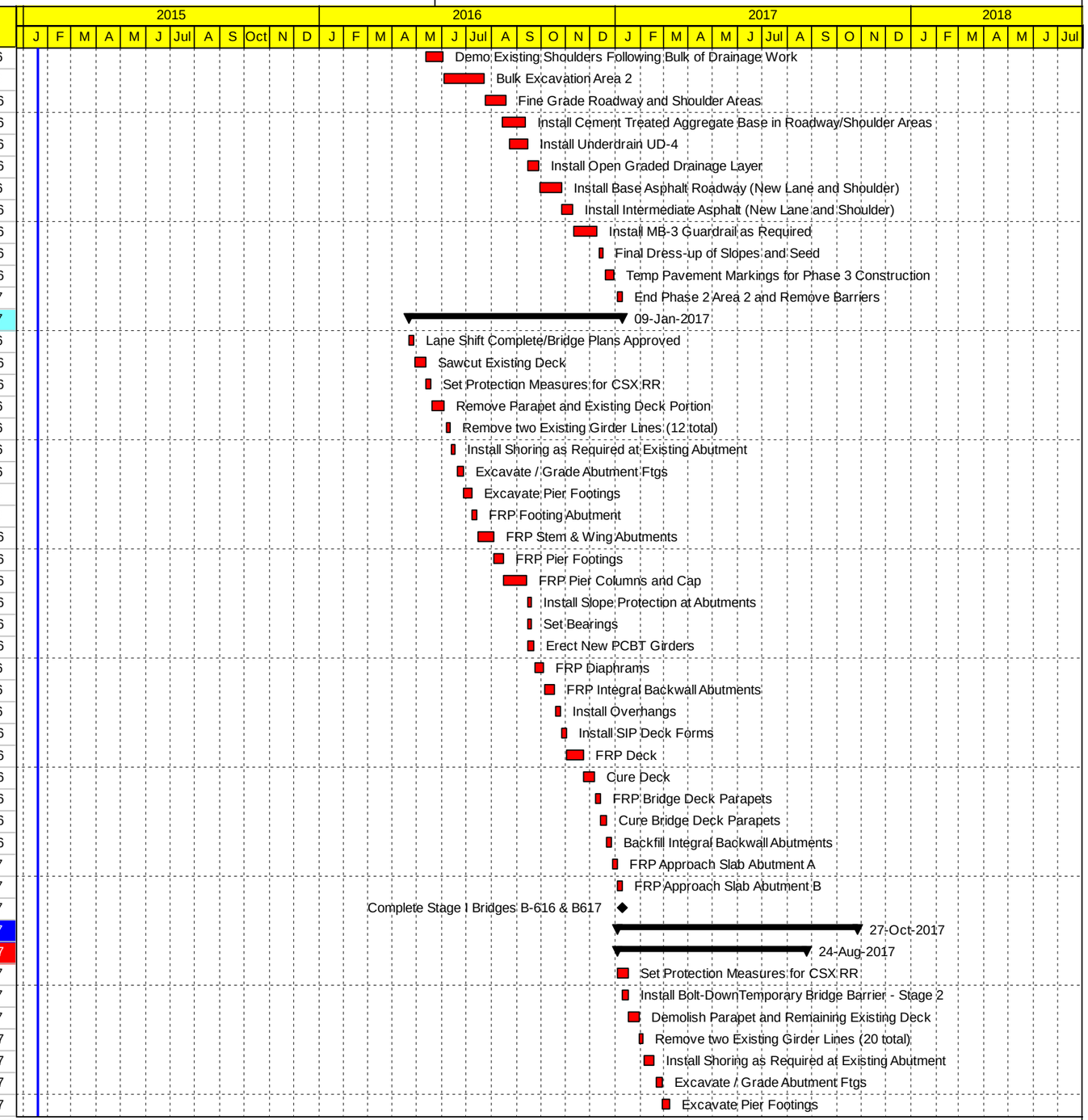

Remaining Level of Effort | Finish Milesone | Remaining Work | Summary
Start Milestone | Actual Work | Critical Remaining Work

SHIRLEY CONTRACTING COMPANY, LLC

I-64 CAPACITY IMPROVEMENTS SEGMENT 1

4.7 PROPOSAL SCHEDULE
CRITICAL PATH

SUBMISSION: December 2, 2014

Activity ID	Activity Name	Original Duration	Start	Finish
H3B3370	FRP Footing Abutment	5d	09-Mar-2017	15-Mar-2017
H3B3390	FRP Stem & Wing Abutments	14d	16-Mar-2017	04-Apr-2017
H3B3400	FRP Pier Footings	8d	05-Apr-2017	14-Apr-2017
H3B3410	FRP Pier Columns and Cap	15d	17-Apr-2017	05-May-2017
H3B3420	Install Slope Protection at Abutments	4d	08-May-2017	11-May-2017
H3B3430	Set Bearings	2d	10-May-2017	11-May-2017
H3B3440	Erect New PCBT Girders	6d	10-May-2017	17-May-2017
H3B3450	FRP Diaphrams	8d	18-May-2017	30-May-2017
H3B3460	FRP Integral Backwall Abutments	10d	31-May-2017	13-Jun-2017
H3B3470	Install Overhangs	5d	14-Jun-2017	20-Jun-2017
H3B3480	Install SIP Deck Forms	5d	21-Jun-2017	27-Jun-2017
H3B3490	FRP Deck	15d	28-Jun-2017	19-Jul-2017
H3B3500	Cure Deck	5d	20-Jul-2017	26-Jul-2017
H3B3510	FRP Bridge Deck Parapets	5d	27-Jul-2017	02-Aug-2017
H3B3520	Cure Bridge Deck Parapets	5d	03-Aug-2017	09-Aug-2017
H3B3530	Backfill Integral Backwall Abutments	3d	10-Aug-2017	14-Aug-2017
H3B3540	FRP Approach Slab Abutment A	4d	15-Aug-2017	18-Aug-2017
H3B3550	FRP Approach Slab Abutment B	4d	21-Aug-2017	24-Aug-2017
H3B3560	Complete Stage 2 Bridges B-616 & B617	0d		24-Aug-2017
NOISEWALL CONSTRUCTION		206d	10-Jan-2017	27-Oct-2017
NOISEWALL #46 - I-64 WB 2611+00 to 2652+00 (4,100 LF)		41d	10-Jan-2017	07-Mar-2017
H451000	Clear, Grub , and Grade for Noisewall #1	13d	10-Jan-2017	26-Jan-2017
H451010	Foundations and Set Posts Noisewall #1	36d	17-Jan-2017	07-Mar-2017
NOISEWALL #47/48 - I-64 WB 2684+00 to 2755+15 (7,115 LF)		165d	08-Mar-2017	27-Oct-2017
H452010	Foundations and Set Posts Noisewall #2	50d	08-Mar-2017	16-May-2017
H452020	Pour Steps and Grade for Panels	20d	26-Apr-2017	23-May-2017
H452030	Set Panels Noisewall #2	60d	24-May-2017	17-Aug-2017
H452040	Backfill Behind Wall and Ditch Grading	30d	18-Aug-2017	29-Sep-2017
H452050	Grade in Front of Walls	15d	02-Oct-2017	20-Oct-2017
H452060	Seed and Stabilize	5d	23-Oct-2017	27-Oct-2017
PHASE 3 - I-64 EASTBOUND & WESTBOUND CONCRETE PAVEMENT		5d	10-Jan-2017	16-Jan-2017
H411000	Set MOT for Phase 3 Work and I-64 Pavement Repairs	5d	10-Jan-2017	16-Jan-2017
PHASE 3 - OUTSIDE SHOULDER STRENGTHENING		0d	25-Aug-2017	25-Aug-2017
EASTBOUND SHOULDERS FT EUSTIS to EASTERN TERMINUS of F		0d	25-Aug-2017	25-Aug-2017
H461035	OPEN NEW EASTBOUND TRAVEL LANES	0d	25-Aug-2017	
PHASE 4 - FINAL THMACO OVERLAY and OPEN LANES		45d	25-Aug-2017	27-Oct-2017
H51000	THMACO Overlay I-64 Eastbound Lanes	20d	25-Aug-2017	22-Sep-2017
H51010	THMACO Overlay I-64 Westbound Lanes	20d	25-Sep-2017	20-Oct-2017
H51020	Permanent Pavement Markings and Snow Plowable Markers	20d	02-Oct-2017	27-Oct-2017

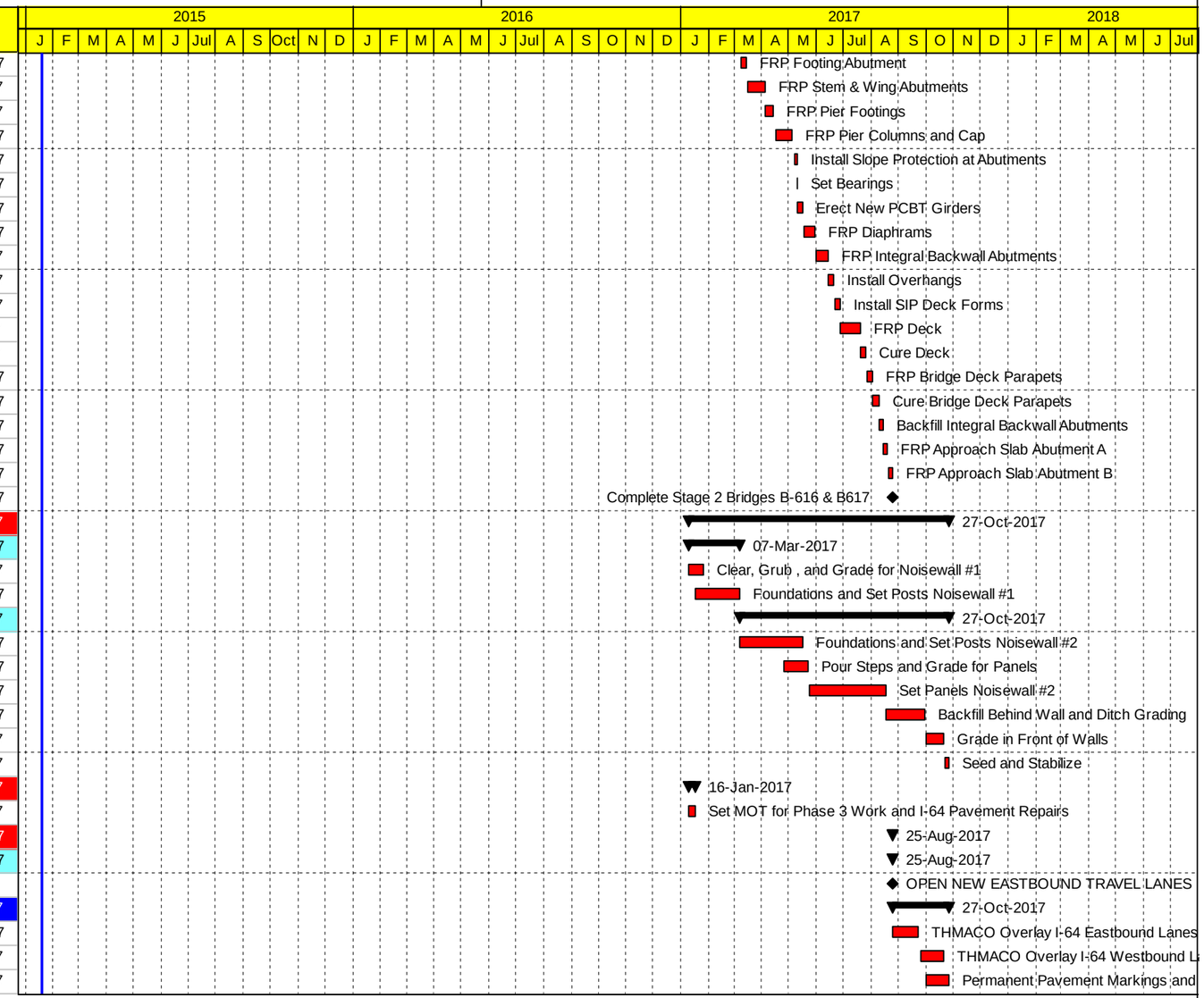

Remaining Level of Effort
Start Milestone
Finish Milesone
Actual Work
Remaining Work
Critical Remaining Work
Summary

SHIRLEY CONTRACTING COMPANY, LLC

Appendix

Attachment No. 4.0.1.1 - Technical Proposal Checklist

Attachment No. 4.0.1.1 - Technical Proposal Checklist

ATTACHMENT 4.0.1.1

I-64 CAPACITY IMPROVEMENTS – SEGMENT 1

VDOT PROJECT NO.: 0064-965-264

TECHNICAL PROPOSAL CHECKLIST AND CONTENTS

Offerors shall furnish a copy of this Technical Proposal Checklist, with the page references added, with the Technical Proposal.

Technical Proposal Component	Form (if any)	RFP Part 1 Cross Reference	Included within page limit?	Technical Proposal Page Reference
Technical Proposal Checklist and Contents	Attachment 4.0.1.1	Section 4.0.1.1	no	N/A
Acknowledgement of RFP, Revisions, and/or Addenda	Attachment 3.6 (Form C-78-RFP)	Sections 3.6, 4.0.1.1	no	N/A
Letter of Submittal	NA	Sections 4.1		
Letter of Submittal on Offeror's letterhead	NA	Section 4.1.1	yes	1
Offeror's official representative information	NA	Section 4.1.1	yes	1
Authorized representative's original signature	NA	Section 4.1.1	yes	1
Declaration of intent	NA	Section 4.1.2	yes	1
120 day declaration	NA	Section 4.1.3	yes	1
Principal Officer information	NA	Section 4.1.5	yes	1
Final Completion Date	NA	Section 4.1.6	yes	1
Proposal Payment Agreement or Waiver of Proposal Payment	Attachment 9.3.1 or 9.3.2	Section 4.1.7	no	N/A
Certification Regarding Debarment Forms	Attachment 11.8.6(a) Attachment 11.8.6(b)	Section 4.1.8	no	N/A
Offeror's Qualifications	NA	Section 4.2		

ATTACHMENT 4.0.1.1

I-64 CAPACITY IMPROVEMENTS – SEGMENT 1

VDOT PROJECT NO.: 0064-965-264

TECHNICAL PROPOSAL CHECKLIST AND CONTENTS

Technical Proposal Component	Form (if any)	RFP Part 1 Cross Reference	Included within page limit?	Technical Proposal Page Reference
Confirmation that the information provided in the SOQ submittal remains true and accurate or indicates that any requested changes were previously approved by VDOT	NA	Section 4.2.1	yes	2-3
Organizational chart with any updates since the SOQ submittal clearly identified to include contractor(s) responsible to perform concrete patching and overlay of existing I-64 pavement.	NA	Section 4.2.2	yes	2
Revised narrative when organizational chart includes updates since the SOQ submittal and a description of contractors' qualifications and previous experience with concrete patching and overlay on interstate projects.	NA	Section 4.2.2	yes	3
Identify on the Work History Form one relevant construction project completed by the contractor responsible for concrete patching of the existing interstate pavement.	4.2.2	Section 4.2.2	no	N/A
Design Concept	NA	Section 4.3		
Conceptual Roadway Plans and description	NA	Section 4.3.1.1	yes	5-11 and 49-79
Conceptual Structural Plans and description	NA	Section 4.3.1.2	yes	12--15 and 80-85

ATTACHMENT 4.0.1.1

I-64 CAPACITY IMPROVEMENTS – SEGMENT 1

VDOT PROJECT NO.: 0064-965-264

TECHNICAL PROPOSAL CHECKLIST AND CONTENTS

Technical Proposal Component	Form (if any)	RFP Part 1 Cross Reference	Included within page limit?	Technical Proposal Page Reference
Project Approach	NA	Section 4.4		
Environmental Management	NA	Section 4.4.1	yes	16-19
Utilities	NA	Section 4.4.2	yes	19-23
Geotechnical	NA	Section 4.4.3	yes	23-25
Quality Assurance/ Quality Control (QA/QC)	NA	Section 4.4.4	yes	25-37
Construction of Project	NA	Section 4.5		
Sequence of Construction	NA	Section 4.5.1	yes	38-43
Transportation Management Plan	NA	Section 4.5.2	yes	43-48
Disadvantaged Business Enterprises (DBE)	NA	Section 4.6		
Written statement of 12 percent DBE participation	NA	Section 4.6	yes	49
Proposal Schedule	NA	Section 4.7		
Proposal Schedule	NA	Section 4.7	no	N/A
Proposal Schedule Narrative	NA	Section 4.7	no	N/A
Proposal Schedule in electronic format (CD-ROM)	NA	Section 4.7	no	N/A

Attachment No. 3.6 - Form C-78

Attachment No. 3.6 - Form C-78

Form C-78-RFP

ATTACHMENT 3.6

COMMONWEALTH OF VIRGINIA
DEPARTMENT OF TRANSPORTATION

RFP NO. C00104905DB75

PROJECT NO.: 0064-965-264

ACKNOWLEDGEMENT OF RFP, REVISION AND/OR ADDENDA

Acknowledgement shall be made of receipt of the Request for Proposals (RFP) and/or any and all revisions and/or addenda pertaining to the above designated project which are issued by the Department prior to the Letter of Submittal submission date shown herein. Failure to include this acknowledgement in the Letter of Submittal may result in the rejection of your proposal.

By signing this Attachment 3.6, the Offeror acknowledges receipt of the RFP and/or following revisions and/or addenda to the RFP for the above designated project which were issued under cover letter(s) of the date(s) shown hereon:

1. Cover letter of June 24, 2014 – RFP
   (Date)
2. Cover letter of August 22, 2014 – RFP Addendum No. 1
   (Date)
3. Cover letter of September 10, 2014 – RFP Addendum No. 2
   (Date)
4. Cover letter of October 31, 2014 – RFP Addendum No. 3
   (Date)
5. Cover letter of November 14, 2014 – RFP Addendum No. 4
   (Date)

SIGNATURE

11/26/2014
DATE

Michael E Post
PRINTED NAME

President/CEO/Manager
TITLE

Attachment No. 9.3.1 - Proposal Payment Agreement

Attachment No. 9.3.1 - Proposal Payment Agreement

ATTACHMENT 9.3.1
PROPOSAL PAYMENT AGREEMENT

THIS PROPOSAL PAYMENT AGREEMENT (this "Agreement") is made and entered into as of this 1st day of December, 2014, by and between the Virginia Department of Transportation ("VDOT"), and Shirley Contracting Company, LLC ("Offeror").

WITNESSETH:

WHEREAS, Offeror is one of the entities who submitted Statements of Qualifications ("SOQs") pursuant to VDOT's **March 14, 2014** Request for Qualifications ("RFQ") and was invited to submit proposals in response to a Request for Proposals ("RFP") for the **I-64 Capacity Improvements – Segment I, Project No. 0064-965-264** ("Project"), under a design-build contract with VDOT ("Design-Build Contract"); and

WHEREAS, as part of the procurement process for the Project, Offeror has already provided and/or furnished to VDOT, and may continue to provide and/or furnish to VDOT, certain intellectual property, materials, information and ideas, including, but not limited to, such matters that are: (a) conveyed verbally and in writing during proprietary meetings or interviews; and (b) contained in, related to or associated with Offeror's proposal, including, but not limited to, written correspondence, designs, drawings, plans, exhibits, photographs, reports, printed material, tapes, electronic disks, or other graphic and visual aids (collectively "Offeror's Intellectual Property"); and

WHEREAS, VDOT is willing to provide a payment to Offeror, subject to the express conditions stated in this Agreement, to obtain certain rights in Offeror's Intellectual Property, provided that Offeror submits a proposal that VDOT determines to be responsive to the RFP ("Offeror's Proposal"), and either (a) Offeror is not awarded the Design-Build Contract; or (b) VDOT cancels the procurement or decides not to award the Design-Build Contract to any Offeror; and

WHEREAS, Offeror wishes to receive the payment offered by VDOT, in exchange for granting VDOT the rights set forth in this Agreement.

NOW, THEREFORE, in consideration of the mutual covenants and agreements set forth in this Agreement and other good and valuable consideration, the receipt and adequacy of which are acknowledged by the parties, the parties agree as follows:

1. **VDOT's Rights in Offeror's Intellectual Property**. Offeror hereby conveys to VDOT all rights, title and interest, free and clear of all liens, claims and encumbrances, in Offeror's Intellectual Property, which includes, without restriction or limitation, the right of VDOT, and anyone contracting with VDOT, to incorporate any ideas or information from Offeror's Intellectual Property into: (a) the Design-Build Contract and the Project; (b) any other contract awarded in reference to the Project; or (c) any subsequent procurement by VDOT. In receiving all rights, title and interest in Offeror's Intellectual Property, VDOT is deemed to own all intellectual property rights, copyrights, patents, trade secrets, trademarks, and service marks in Offeror's Intellectual Property, and Offeror agrees that it shall, at the request of VDOT, execute all papers and perform all other acts that may be necessary to ensure that VDOT's rights, title and interest in Offeror's Intellectual Property are protected. The rights conferred herein to VDOT include, without limitation, VDOT's ability to use Offeror's Intellectual Property without the obligation to notify or seek permission from Offeror.

2. **Exclusions from Offeror's Intellectual Property**. Notwithstanding Section 1 above, it is understood and agreed that Offeror's Intellectual Property is not intended to include, and Offeror does not convey any rights to, the Escrow Proposal Documents submitted by Offeror in accordance with the RFP.

3. **Proposal Payment**. VDOT agrees to pay Offeror the lump sum amount of **Seventy Thousand and 00/100 Dollars ($70,000.00)** ("Proposal Payment"), which payment constitutes payment in full to Offeror for the conveyance of Offeror's Intellectual Property to VDOT in accordance with this Agreement. Payment of the Proposal Payment is conditioned upon: (a) Offeror's Proposal being, in the sole discretion of VDOT, responsive to the RFP; (b) Offeror complying with all other terms and conditions of this Agreement; and (c) either (i) Offeror is not awarded the Design-Build Contract, or (ii) VDOT cancels the procurement or decides not to award the Design-Build Contract to any Offeror.

4. **Payment Due Date**. Subject to the conditions set forth in this Agreement, VDOT will make payment of the Proposal Payment to the Offeror within forty-five (45) days after the later of: (a) notice from VDOT that it has awarded the Design-Build Contract to another Offeror; or (b) notice from VDOT that the procurement for the Project has been cancelled and that there will be no Contract Award.

5. **Effective Date of this Agreement**. The rights and obligations of VDOT and Offeror under this Agreement, including VDOT's ownership rights in Offeror's Intellectual Property, vests upon the date that Offeror's Proposal is submitted to VDOT. Notwithstanding the above, if Offeror's Proposal is determined by VDOT, in its sole discretion, to be nonresponsive to the RFP, then Offeror is deemed to have waived its right to obtain the Proposal Payment, and VDOT shall have no obligations under this Agreement.

6. Indemnity. Subject to the limitation contained below, Offeror shall, at its own expense, indemnify, protect and hold harmless VDOT and its agents, directors, officers, employees, representatives and contractors from all claims, costs, expenses, liabilities, demands, or suits at law or equity ("Claims") of, by or in favor of or awarded to any third party arising in whole or in part from: (a) the negligence or wilful misconduct of Offeror or any of its agents, officers, employees, representatives or subcontractors; or (b) breach of any of Offeror's obligations under this Agreement, including its representation and warranty under Section 8 hereof. This indemnity shall not apply with respect to any Claims caused by or resulting from the sole negligence or wilful misconduct of VDOT, or its agents, directors, officers, employees, representatives or contractors.

7. Assignment. Offeror shall not assign this Agreement, without VDOT's prior written consent, which consent may be given or withheld in VDOT's sole discretion. Any assignment of this Agreement without such consent shall be null and void.

8. Authority to Enter into this Agreement. By executing this Agreement, Offeror specifically represents and warrants that it has the authority to convey to VDOT all rights, title, and interest in Offeror's Intellectual Property, including, but not limited to, those any rights that might have been vested in team members, subcontractors, consultants or anyone else who may have contributed to the development of Offeror's Intellectual Property, free and clear of all liens, claims and encumbrances.

9. Miscellaneous.

a. Offeror and VDOT agree that Offeror, its team members, and their respective employees are not agents of VDOT as a result of this Agreement.

b. Any capitalized term used herein but not otherwise defined shall have the meanings set forth in the RFP.

c. This Agreement, together with the RFP, embodies the entire agreement of the parties with respect to the subject matter hereof. There are no promises, terms, conditions, or obligations other than those contained herein or in the RFP, and this Agreement shall supersede all previous communications, representations, or agreements, either verbal or written, between the parties hereto.

d. It is understood and agreed by the parties hereto that if any part, term, or provision of this Agreement is by the courts held to be illegal or in conflict with any law of the Commonwealth of Virginia, validity of the remaining portions or provisions shall not be affected, and the rights and obligations of the parties shall be construed and enforced as if the Agreement did not contain the particular part, term, or provisions to be invalid.

e. This Agreement shall be governed by and construed in accordance with the laws of the Commonwealth of Virginia.

IN WITNESS WHEREOF, this Agreement has been executed and delivered as of the day and year first above written.

VIRGINIA DEPARTMENT OF TRANSPORTATION

By: _____

Name: _____

Title: _____

[Insert Offeror's Name]

By: _____

Name: Michael E. Post

Title: President/CEO/Manager

Attachment 11.8.6(a)(b) - Debarment Forms

Attachment 11.8.6(a)(b) - Debarment Forms

ATTACHMENT 11.8.6(a)
CERTIFICATION REGARDING DEBARMENT
PRIMARY COVERED TRANSACTIONS

Project No.: 0064-965-264

1) The prospective primary participant certifies to the best of its knowledge and belief, that it and its principals:

a) Are not presently debarred, suspended, proposed for debarment, declared ineligible, or voluntarily excluded from covered transactions by any Federal department or agency.

b) Have not within a three-year period preceding this proposal been convicted of or had a civil judgment rendered against them for commission of fraud or a criminal offense in connection with obtaining, attempting to obtain, or performing a public (Federal, State or local) transaction or contract under a public transaction; and have not been convicted of any violations of Federal or State antitrust statutes or commission of embezzlement, theft, forgery, bribery, falsification, or destruction of records, making false statements, or receiving stolen property;

c) Are not presently indicted for or otherwise criminally or civilly charged by a governmental entity (Federal, State or local) with commission of any of the offenses enumerated in paragraph 1) b) of this certification; and

d) Have not within a three-year period preceding this application/proposal had one or more public transactions (Federal, State or local) terminated for cause or default.

2) Where the prospective primary participant is unable to certify to any of the statements in this certification, such prospective participant shall attach an explanation to this proposal.

The undersigned makes the foregoing statements to be filed with the proposal submitted on behalf of the Offeror for contracts to be let by the Commonwealth Transportation Board.

	12/2/14	President/CEO/Manager
Signature	Date	Title
Michael E Post		

Shirley Contracting Company, LLC
Name of Firm

ATTACHMENT 11.8.6(b)
CERTIFICATION REGARDING DEBARMENT
LOWER TIER COVERED TRANSACTIONS

Project No.: 0064-965-264

1) The prospective lower tier participant certifies, by submission of this proposal, that neither it nor its principals is presently debarred, suspended, proposed for debarment, declared ineligible, or voluntarily excluded from participation in this transaction by any Federal department or agency.

2) Where the prospective lower tier participant is unable to certify to any of the statements in this certification, such prospective participant shall attach an explanation to this proposal.

The undersigned makes the foregoing statements to be filed with the proposal submitted on behalf of the Offeror for contracts to be let by the Commonwealth Transportation Board.

James M Tam	11/25/14	President
Signature	Date	Title

Denton Concrete Services Company
Name of Firm

ATTACHMENT 11.8.6(b)
CERTIFICATION REGARDING DEBARMENT
LOWER TIER COVERED TRANSACTIONS

Project No.: 0064-965-264

1) The prospective lower tier participant certifies, by submission of this proposal, that neither it nor its principals is presently debarred, suspended, proposed for debarment, declared ineligible, or voluntarily excluded from participation in this transaction by any Federal department or agency.

2) Where the prospective lower tier participant is unable to certify to any of the statements in this certification, such prospective participant shall attach an explanation to this proposal.

The undersigned makes the foregoing statements to be filed with the proposal submitted on behalf of the Offeror for contracts to be let by the Commonwealth Transportation Board.

BY: DEMARTINO CO., LLC, GENERAL PARTNER

Signature JOHN M. DEMARTINO Date 11/25/14

PRESIDENT
Title

E.J. BRENEMAN, L.P.
Name of Firm

ATTACHMENT NO. 3.2.7(b)

CERTIFICATION REGARDING DEBARMENT
LOWER TIER COVERED TRANSACTIONS

Project No.: 0064-965-264

1) The prospective lower tier participant certifies, by submission of this proposal, that neither it nor its principals is presently debarred, suspended, proposed for debarment, declared ineligible, or voluntarily excluded from participation in this transaction by any Federal department or agency.

2) Where the prospective lower tier participant is unable to certify to any of the statements in this certification, such prospective participant shall attach an explanation to this form.

The undersigned makes the foregoing statements to be filed with the proposal submitted on behalf of the Offeror for contracts to be let by the Commonwealth Transportation Board.

Kurt D. Thompson 11/18/2014 Executive Vice President

Signature Date Title

Dewberry Consultants LLC

Name of Firm

ATTACHMENT NO. 3.2.7(b)

CERTIFICATION REGARDING DEBARMENT
LOWER TIER COVERED TRANSACTIONS

Project No.: 0064-965-264

1) The prospective lower tier participant certifies, by submission of this proposal, that neither it nor its principals is presently debarred, suspended, proposed for debarment, declared ineligible, or voluntarily excluded from participation in this transaction by any Federal department or agency.

2) Where the prospective lower tier participant is unable to certify to any of the statements in this certification, such prospective participant shall attach an explanation to this form.

The undersigned makes the foregoing statements to be filed with the proposal submitted on behalf of the Offeror for contracts to be let by the Commonwealth Transportation Board.

Signature	11/18/14 Date	President Title

GeoConcepts Engineering, Inc.
Name of Firm

ATTACHMENT NO. 3.2.7(b)

CERTIFICATION REGARDING DEBARMENT
LOWER TIER COVERED TRANSACTIONS

Project No.: 0064-965-264

1) The prospective lower tier participant certifies, by submission of this proposal, that neither it nor its principals is presently debarred, suspended, proposed for debarment, declared ineligible, or voluntarily excluded from participation in this transaction by any Federal department or agency.

2) Where the prospective lower tier participant is unable to certify to any of the statements in this certification, such prospective participant shall attach an explanation to this form.

The undersigned makes the foregoing statements to be filed with the proposal submitted on behalf of the Offeror for contracts to be let by the Commonwealth Transportation Board.

William J. McKeague	11/19/14	Vice President
Signature	Date	Title

Quantum Spatial, Inc.
Name of Firm

ATTACHMENT NO. 3.2.7(b)

CERTIFICATION REGARDING DEBARMENT
LOWER TIER COVERED TRANSACTIONS

Project No.: 0064-965-264

1) The prospective lower tier participant certifies, by submission of this proposal, that neither it nor its principals is presently debarred, suspended, proposed for debarment, declared ineligible, or voluntarily excluded from participation in this transaction by any Federal department or agency.

2) Where the prospective lower tier participant is unable to certify to any of the statements in this certification, such prospective participant shall attach an explanation to this form.

The undersigned makes the foregoing statements to be filed with the proposal submitted on behalf of the Offeror for contracts to be let by the Commonwealth Transportation Board.

	11/19/2014	President & COO
Signature	Date	Title

Skelly and Loy, Inc.

Name of Firm

ATTACHMENT NO. 3.2.7(b)

CERTIFICATION REGARDING DEBARMENT
LOWER TIER COVERED TRANSACTIONS

Project No.: 0064-965-264

1) The prospective lower tier participant certifies, by submission of this proposal, that neither it nor its principals is presently debarred, suspended, proposed for debarment, declared ineligible, or voluntarily excluded from participation in this transaction by any Federal department or agency.

2) Where the prospective lower tier participant is unable to certify to any of the statements in this certification, such prospective participant shall attach an explanation to this form.

The undersigned makes the foregoing statements to be filed with the proposal submitted on behalf of the Offeror for contracts to be let by the Commonwealth Transportation Board.

	11/18/14	President
Signature	Date	Title

Accumark, Inc.

Name of Firm

ATTACHMENT 11.8.6(b)
CERTIFICATION REGARDING DEBARMENT
LOWER TIER COVERED TRANSACTIONS

Project No.: 0064-965-264

1) The prospective lower tier participant certifies, by submission of this proposal, that neither it nor its principals is presently debarred, suspended, proposed for debarment, declared ineligible, or voluntarily excluded from participation in this transaction by any Federal department or agency.

2) Where the prospective lower tier participant is unable to certify to any of the statements in this certification, such prospective participant shall attach an explanation to this proposal.

The undersigned makes the foregoing statements to be filed with the proposal submitted on behalf of the Offeror for contracts to be let by the Commonwealth Transportation Board.

Patricia E Dobbs 11/19/14 President

Signature Date Title

Diversified Property Services, Inc.

Name of Firm

ATTACHMENT 11.8.6(b)
CERTIFICATION REGARDING DEBARMENT
LOWER TIER COVERED TRANSACTIONS

Project No.: 0064-965-264

1) The prospective lower tier participant certifies, by submission of this proposal, that neither it nor its principals is presently debarred, suspended, proposed for debarment, declared ineligible, or voluntarily excluded from participation in this transaction by any Federal department or agency.

2) Where the prospective lower tier participant is unable to certify to any of the statements in this certification, such prospective participant shall attach an explanation to this proposal.

The undersigned makes the foregoing statements to be filed with the proposal submitted on behalf of the Offeror for contracts to be let by the Commonwealth Transportation Board.

R Rahib Punche 11-18-14 Settlement officer

Signature Date Title

Old Dominion Settlements Inc, T/A Key Title

Name of Firm

ATTACHMENT 11.8.6(b)
CERTIFICATION REGARDING DEBARMENT
LOWER TIER COVERED TRANSACTIONS

Project No.: 0064-965-264

1) The prospective lower tier participant certifies, by submission of this proposal, that neither it nor its principals is presently debarred, suspended, proposed for debarment, declared ineligible, or voluntarily excluded from participation in this transaction by any Federal department or agency.

2) Where the prospective lower tier participant is unable to certify to any of the statements in this certification, such prospective participant shall attach an explanation to this proposal.

The undersigned makes the foregoing statements to be filed with the proposal submitted on behalf of the Offeror for contracts to be let by the Commonwealth Transportation Board.

Elizabeth Quinn November 19, 2014 President
Signature Date Title

Quinn Consulting Services, Inc.
Name of Firm

ATTACHMENT 11.8.6(b)
CERTIFICATION REGARDING DEBARMENT
LOWER TIER COVERED TRANSACTIONS

Project No.: 0064-965-264

1) The prospective lower tier participant certifies, by submission of this proposal, that neither it nor its principals is presently debarred, suspended, proposed for debarment, declared ineligible, or voluntarily excluded from participation in this transaction by any Federal department or agency.

2) Where the prospective lower tier participant is unable to certify to any of the statements in this certification, such prospective participant shall attach an explanation to this proposal.

The undersigned makes the foregoing statements to be filed with the proposal submitted on behalf of the Offeror for contracts to be let by the Commonwealth Transportation Board.

Signature	Date	Title
	11/18/14	President

Geotechnical Environmental and Testing Solutions, Inc. d/b/a GET Solutions, Inc.
Name of Firm

NOV 19 2014

ATTACHMENT NO. 3.2.7(b)

CERTIFICATION REGARDING DEBARMENT
LOWER TIER COVERED TRANSACTIONS

Project No.: 0064-965-264

1) The prospective lower tier participant certifies, by submission of this proposal, that neither it nor its principals is presently debarred, suspended, proposed for debarment, declared ineligible, or voluntarily excluded from participation in this transaction by any Federal department or agency.

2) Where the prospective lower tier participant is unable to certify to any of the statements in this certification, such prospective participant shall attach an explanation to this form.

The undersigned makes the foregoing statements to be filed with the proposal submitted on behalf of the Offeror for contracts to be let by the Commonwealth Transportation Board.

J. Christopher [illegible] VP - Chief Engineer

Signature Date 11-25-14 Title

ECS Mid-Atlantic, LLC

Name of Firm

ATTACHMENT NO. 3.2.7(b)

CERTIFICATION REGARDING DEBARMENT
LOWER TIER COVERED TRANSACTIONS

Project No.: 0064-965-264

1) The prospective lower tier participant certifies, by submission of this proposal, that neither it nor its principals is presently debarred, suspended, proposed for debarment, declared ineligible, or voluntarily excluded from participation in this transaction by any Federal department or agency.

2) Where the prospective lower tier participant is unable to certify to any of the statements in this certification, such prospective participant shall attach an explanation to this form.

The undersigned makes the foregoing statements to be filed with the proposal submitted on behalf of the Offeror for contracts to be let by the Commonwealth Transportation Board.

Signature 11/13/14 Date PARTNER Title

PULSAR ADVERTISING, INC
Name of Firm

ORIGINAL

Response to Request for Proposals

I-64 CAPACITY IMPROVEMENTS - SEGMENT I

Newport News, Virginia

State Project Nos.: 0064-965-264, P101, R201, C501, B616, B617, B618, B619, B620, B621, D601, D602
Federal Project Nos.: NHS-064-3 (479)
Contract ID No.: C00104905DB75

VOLUME II: DESIGN CONCEPT

Submitted By:

SHIRLEY CONTRACTING COMPANY, LLC

In Association With:

Dewberry

INDEX OF SHEETS

1 TITLE SHEET
1A SEQUENCE OF CONSTRUCTION
2A TYPICAL SECTIONS
2B TYPICAL SECTIONS
2C TYPICAL SECTIONS
3 I-64 PLAN STA. 1501+00.00 TO STA. 1515+00.00
4 I-64 PLAN STA. 1515+00.00 TO STA. 1529+00.00
5 I-64 PLAN STA. 1529+00.00 TO STA. 1543+00.00
6 I-64 PLAN STA. 1543+00.00 TO STA. 1557+00.00
7 I-64 PLAN STA. 1557+00.00 TO STA. 1571+00.00
8 I-64 PLAN STA. 1571+00.00 TO STA. 1585+00.00
9 I-64 PLAN STA. 1585+00.00 TO STA. 1599+00.00
10 I-64 PLAN STA. 1599+00.00 TO STA. 1613+00.00
10(1) OPTION 2 PLAN STA. 1570+86.26 TO STA. 1604+75.00
10(2) OPTION 2 PLAN STA. 1604+75.00 TO STA. 1639+95.07
11 I-64 RAMPS AND FORT EUSTIS BLVD. PLAN
12 I-64 RAMPS AND FORT EUSTIS BLVD. PLAN
13 I-64 PLAN STA. 1613+00.00 TO STA. 1627+00.00
14 I-64 PLAN STA. 1627+00.00 TO STA. 1641+00.00
15 I-64 PLAN STA. 1641+00.00 TO STA. 1655+00.00
16 I-64 PLAN STA. 1655+00.00 TO STA. 1669+00.00
17 I-64 PLAN STA. 1669+00.00 TO STA. 1683+00.00
18 I-64 PLAN STA. 1683+00.00 TO STA. 1697+00.00
19 I-64 PLAN STA. 1697+00.00 TO STA. 1711+00.00
20 I-64 PLAN STA. 1711+00.00 TO STA. 1725+00.00
21 I-64 PLAN STA. 1725+00.00 TO STA. 1739+00.00
22 I-64 PLAN STA. 1739+00.00 TO STA. 1753+00.00
23 I-64 PLAN STA. 1753+00.00 TO STA. 1767+00.00
24 I-64 PLAN STA. 1767+00.00 TO STA. 1781+00.00
25 I-64 PLAN STA. 1781+00.00 TO STA. 1795+00.00
26 I-64 OVER INDUSTRIAL PARK DRIVE AND CSX - GENERAL PLAN AND ELEVATION
27 I-64 OVER INDUSTRIAL PARK DRIVE AND CSX - TRANSVERSE SECTIONS
28 I-64 OVER ROUTE 105 (FORT EUSTIS BLVD) - GENERAL PLAN AND ELEVATION
29 I-64 OVER ROUTE 105 (FORT EUSTIS BLVD) - TRANSVERSE SECTIONS
30 I-64 OVER LEE HALL RESERVOIR - GENERAL PLAN AND ELEVATION
31 I-64 OVER LEE HALL RESERVOIR - TRANSVERSE SECTIONS

FHWA - 534 DATA 3A103

STATE	FEDERAL AID PROJECT	STATE ROUTE	STATE PROJECT	SHEET NO.
VA.	NHS-064-3( ) (SEE TABULATION BELOW FOR SECTION NUMBERS)	64	(FO) 0064-965-264 (SEE TABULATION BELOW FOR SECTION NUMBERS)	1

COMMONWEALTH OF VIRGINIA

DEPARTMENT OF TRANSPORTATION

PLAN OF PROPOSED STATE HIGHWAY

FUNCTIONAL CLASSIFICATION AND TRAFFIC DATA	
Interstate - Urban Principal Arterial - 70 MPH Min. Design Speed	
	FROM: 0.50 MILES EAST OF ROUTE 238 (YORKTOWN ROAD) TO: 1.55 MILES WEST OF ROUTE 143 (JEFFERSON AVENUE)
ADT (2014)	100,000
ADT (2036)	136,000
DHV	11,000
D (%) (design hour)	50%
T (%) (design hour)	3%
V (MPH)	*

* See PLAN sheets for horizontal and vertical curve design speeds

CITY OF NEWPORT NEWS
I-64 CAPACITY IMPROVEMENTS - SEGMENT 1
FROM: 0.50 MILES EAST OF ROUTE 238 (YORKTOWN ROAD) TO: 1.55 MILES WEST OF ROUTE 143 (JEFFERSON AVENUE)

PROJ. 0064-965-264, P-101, R-201, C-501, B-616, B-617, B-618, B-619, B-620, B-621, D-601, D-602

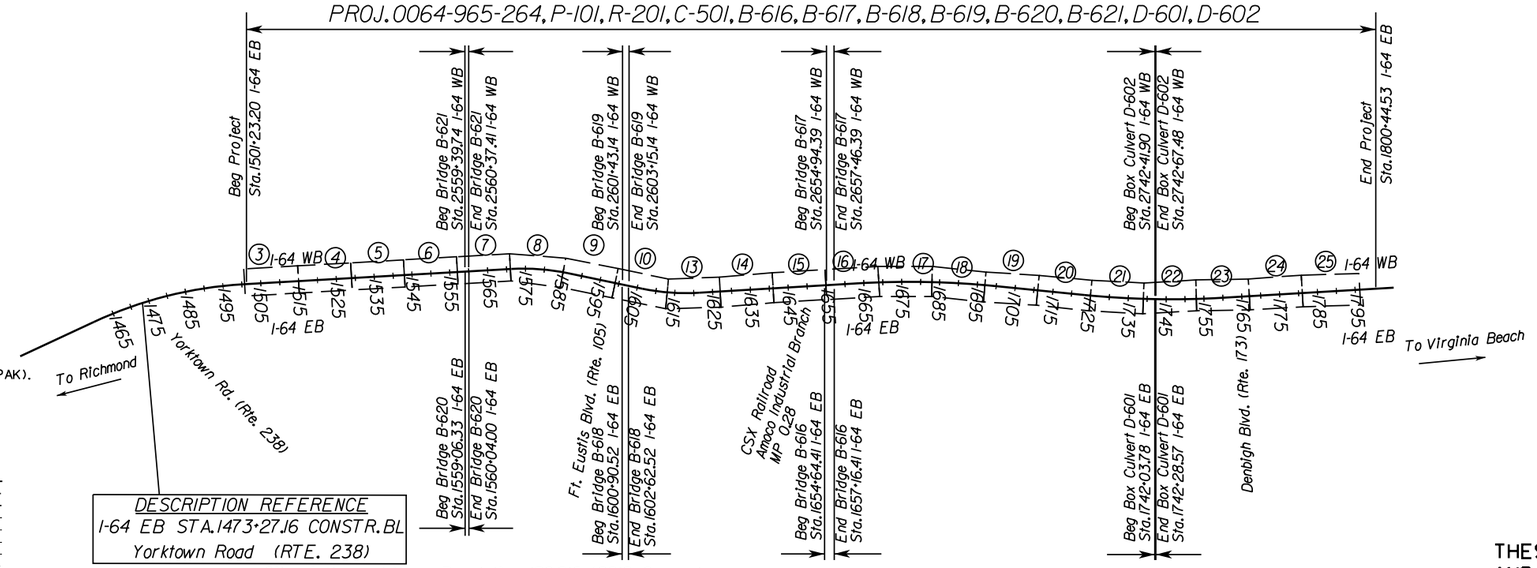

THIS PROJECT WAS DEVELOPED UTILIZING THE DEPARTMENT'S ENGINEERING DESIGN PACKAGE (GEOPAK). GEOPAK Computer Identification No. 104905

DESCRIPTION REFERENCE
I-64 EB STA.1473+27.16 CONSTR.BL
Yorktown Road (RTE. 238)

City of Newport News Population 180,916 (2010 Census)

STATE PROJECT NO.	SECTION	FEDERAL AID PROJECT NO.	TYPE CODE	UPC NO.	EQUALITIES	LENGTH INCLUDING BRIDGE(S)		LENGTH EXCLUDING BRIDGE(S)		BRIDGE PROJECT NO.	TYPE PROJECT	DESCRIPTION
					FEET	FEET	MILES	FEET	MILES			
0064-965-264	P-101	NHS-064-3(479)	PENG	104905	NONE	29921.33	5.667	29399.66	5.568		Prelim. Engr.	FROM: 0.50 MILES EAST OF ROUTE 238 (YORKTOWN ROAD) TO: 1.55 MILES WEST OF ROUTE 143 (JEFFERSON AVENUE)
	R-201	NHS-064-3(479)	ROWA	104905	NONE	29921.33	5.667	29399.66	5.568		Right of Way	
	C-501	NHS-064-3(479)		104905	NONE	29921.33	5.667	29399.66	5.568		Construction	
	B-616	NHS-064-3(479)	X531	104905	NONE	252.00	0.048				Constr. - Rehab.	64 EB Bridge @ Industrial Park Dr. & CSX
	B-617	NHS-064-3(479)	X531	104905	NONE	252.00	0.048				Constr. - Rehab.	64 WB Bridge @ Industrial Park Dr. & CSX
	B-618	NHS-064-3(479)	X231	104905	NONE	172.00	0.033				Constr. - Rehab.	64 EB Bridge @ Fort Eustis Blvd.
	B-619	NHS-064-3(479)	X231	104905	NONE	172.00	0.033				Constr. - Rehab.	64 WB Bridge @ Fort Eustis Blvd.
	B-620	NHS-064-3(479)	X081	104905	NONE	97.67	0.018				Constr. - Rehab.	64 EB Bridge Lee Hall Reservoir
	B-621	NHS-064-3(479)	X081	104905	NONE	97.67	0.018				Constr. - Rehab.	64 WB Bridge Lee Hall Reservoir
	D-601	NHS-064-3(479)	X028	104905	NONE	24.79	0.004				Constr. - Rehab.	64 EB Box Culvert @ Stony Run
	D-602	NHS-064-3(479)	X028	104905	NONE	25.58	0.004				Constr. - Rehab.	64 WB Box Culvert @ Stony Run

Project Lengths are based on I-64 EB Construction Baseline.

CONVENTIONAL SIGNS

STATE LINE
COUNTY LINE
CITY, TOWN OR VILLAGE
RIGHT OF WAY LINE
FENCE LINE
UNFENCED PROPERTY LINE
FENCED PROPERTY LINE
WATER LINE
SANITARY SEWER LINE
GAS LINE
ELECTRIC UNDERGROUND CABLE
TRAVELED WAY
GUARD RAIL
RETAINING WALL
RAILROADS
BASE OR SURVEY LINE

LEVEE OR EMBANKMENT
BRIDGES
CULVERTS
DROP INLET
POWER POLES
TELEPHONE OR TELEGRAPH POLES
TELEPHONE OR TELEGRAPH LINES
HEDGE
TREES
HEAVY WOODS
GROUND ELEVATION
GRADE ELEVATION

PROJECT MANAGER Shirley Contracting Company, LLC
SURVEYED BY, DATE Dewberry (703) 849-0607
DESIGN SUPERVISED BY Shirley Contracting Company, LLC
DESIGNED BY Dewberry (703) 849-0607

THESE PLANS ARE UNFINISHED AND UNAPPROVED AND ARE NOT TO BE USED FOR ANY TYPE OF CONSTRUCTION OR THE ACQUISITION OF RIGHT OF WAY.

SCALE
0 2000' 4000'

TIER 2 PROJECT

Copyright 2014, Commonwealth of Virginia

PROJECT	SHEET NO.
0064-965-264	1

LIMITED ACCESS HIGHWAY By Resolution of Highway Commission dated October 4, 1956

PROJECT MANAGER Shirley Contracting Company, LLC.
SURVEYED BY, DATE
DESIGN BY Dewberry
SUBSURFACE UTILITY BY, DATE

THESE PLANS ARE UNFINISHED AND UNAPPROVED AND ARE NOT TO BE USED FOR ANY TYPE OF CONSTRUCTION OR THE ACQUISITION OF RIGHT OF WAY.

SHIRLEY CONTRACTING COMPANY, LLC
Dewberry

REVISED	STATE	STATE ROUTE	STATE PROJECT	SHEET NO.
	VA.	64	0064-965-264, R-201, C-501	1A

DESIGN FEATURES RELATING TO CONSTRUCTION OR TO REGULATION AND CONTROL OF TRAFFIC MAY BE SUBJECT TO CHANGE AS DEEMED NECESSARY BY THE DEPARTMENT

PROPOSED SEQUENCE OF CONSTRUCTION

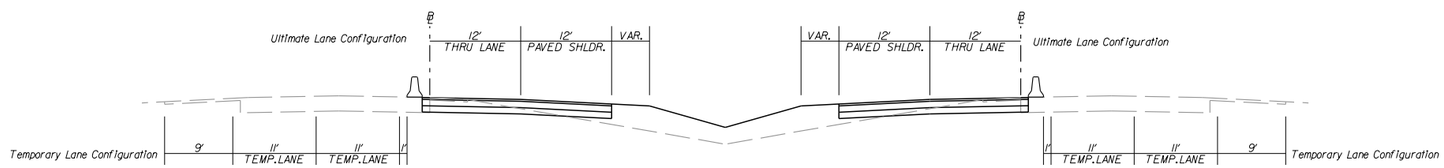

NOT TO SCALE

PHASE 1 & 2 CONSTRUCTION - SHIFT LANES & ULTIMATE MEDIAN WIDENING

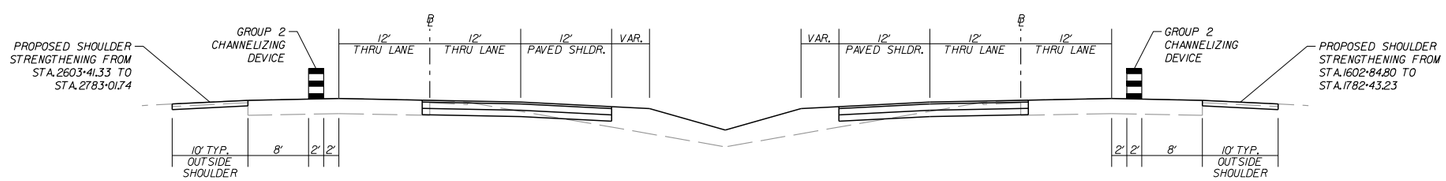

NOT TO SCALE

PHASE 3 & 4 CONSTRUCTION - PLACE FINAL SURFACE COURSE AND ALL "FINISHING" ITEMS

PROJECT	SHEET NO.
0064-965-264	1A

LIMITED ACCESS HIGHWAY By Resolution of Highway Commission dated October 4, 1956

PROJECT MANAGER Shirley Contracting Company, LLC
SURVEYED BY, DATE
DESIGN BY Dewberry
SUBSURFACE UTILITY BY, DATE

TYPICAL SECTIONS
I-64 MAINLINE

THESE PLANS ARE UNFINISHED AND UNAPPROVED AND ARE NOT TO BE USED FOR ANY TYPE OF CONSTRUCTION OR THE ACQUISITION OF RIGHT OF WAY.

SHIRLEY CONTRACTING COMPANY, LLC
Dewberry

DESIGN FEATURES RELATING TO CONSTRUCTION OR TO REGULATION AND CONTROL OF TRAFFIC MAY BE SUBJECT TO CHANGE AS DEEMED NECESSARY BY THE DEPARTMENT

REVISED	STATE	ROUTE	PROJECT	SHEET NO.
	VA.	64	0064-965-264, R-201, C-501	2A

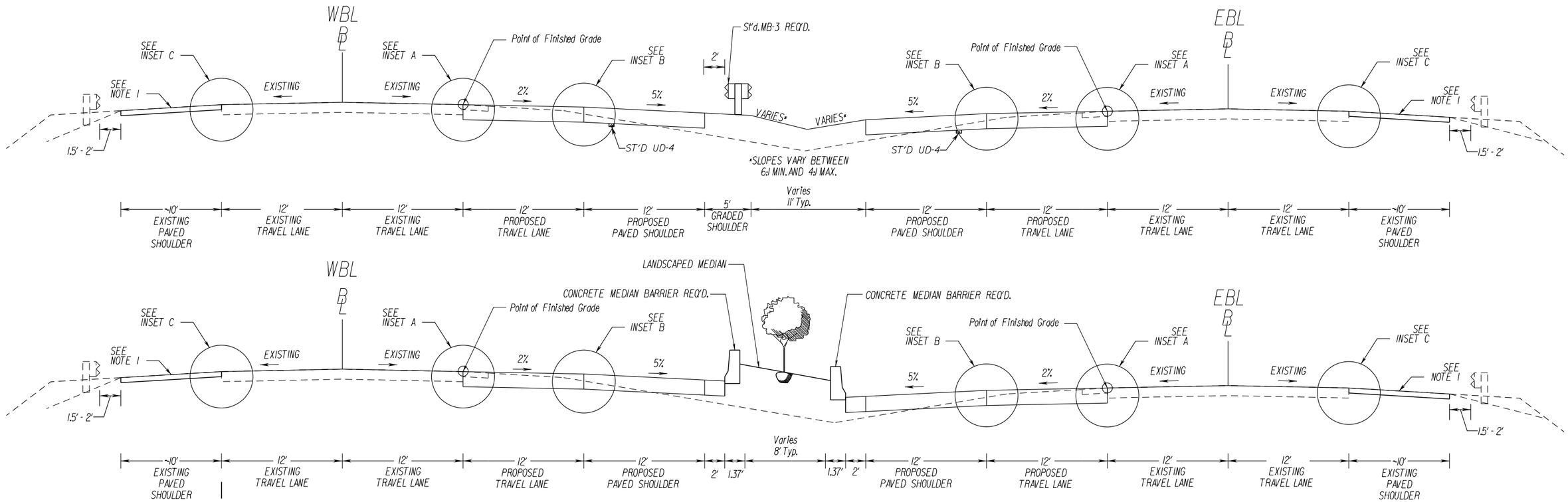

SOUND BARRIER SECTIONS

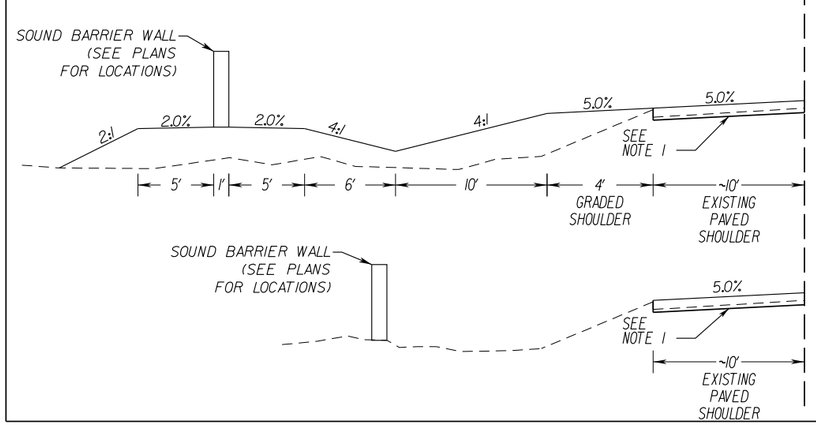

NOTES

1. EXISTING OUTSIDE SHOULDER TO BE REPLACED ONLY FROM STA.1602+84.80 TO STA.1782+43.23

(1) ¾" THIN HOT MIX ASPHALT CONCRETE OVERLAY (THMACO)
(2) SURFACE COURSE, ASPHALT CONCRETE, 2.0", TYPE SMA-12.5 (76-22)
(3) INTERMEDIATE COURSE, ASPHALT CONCRETE, 2.0", TYPE SMA-19.0 (76-22)
(4) BASE COURSE, ASPHALT CONCRETE, 7.0", TYPE BM-25.0D
(5) DRAINAGE, OPEN GRADED DRAINAGE LAYER - ASPHALT OR CEMENT STABILIZED, 3.0"
(6) SUBBASE COURSE, CEMENT STABILIZED AGGREGATE, 6.0", TYPE 1, NO. 21A, 4% CEMENT, PUGMILL
(7) SURFACE COURSE, ASPHALT CONCRETE, 2.0", TYPE SM-12.5D
(8) INTERMEDIATE COURSE, ASPHALT CONCRETE, 2.0", TYPE IM-19.0A
(9) JOINTED PLAIN CONCRETE PAVEMENT (JPCP), 11.0"
(10) BASE COURSE, ASPHALT CONCRETE, 4.0", TYPE BM-25.0D
(11) REMOVE 6" OF EXISTING SHOULDER MAT'L.

FLEXIBLE PAVEMENT OPTION

INSET A

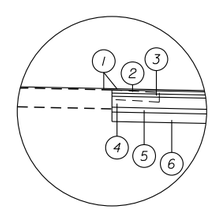

INSET B

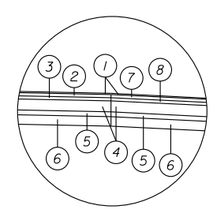

RIGID PAVEMENT OPTION

INSET A

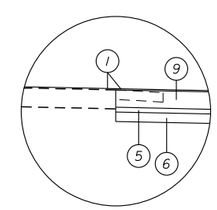

INSET B

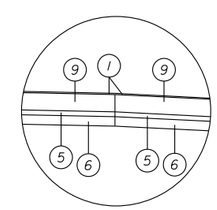

INSET C

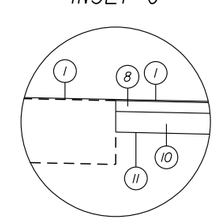

Not To Scale	PROJECT 0064-965-264	SHEET NO. 2A

LIMITED ACCESS HIGHWAY By Resolution of Highway Commission dated October 4, 1956

PROJECT MANAGER Shirley Contracting Company, LLC
SURVEYED BY, DATE
DESIGN BY Dewberry
SUBSURFACE UTILITY BY, DATE

TYPICAL SECTIONS
I-64 MAINLINE

THESE PLANS ARE UNFINISHED AND UNAPPROVED AND ARE NOT TO BE USED FOR ANY TYPE OF CONSTRUCTION OR THE ACQUISITION OF RIGHT OF WAY.

SHIRLEY CONTRACTING COMPANY, LLC
Dewberry

REVISED	STATE	STATE ROUTE	STATE PROJECT	SHEET NO.
	VA.	64	0064-965-264, R-201, C-501	2B

DESIGN FEATURES RELATING TO CONSTRUCTION OR TO REGULATION AND CONTROL OF TRAFFIC MAY BE SUBJECT TO CHANGE AS DEEMED NECESSARY BY THE DEPARTMENT

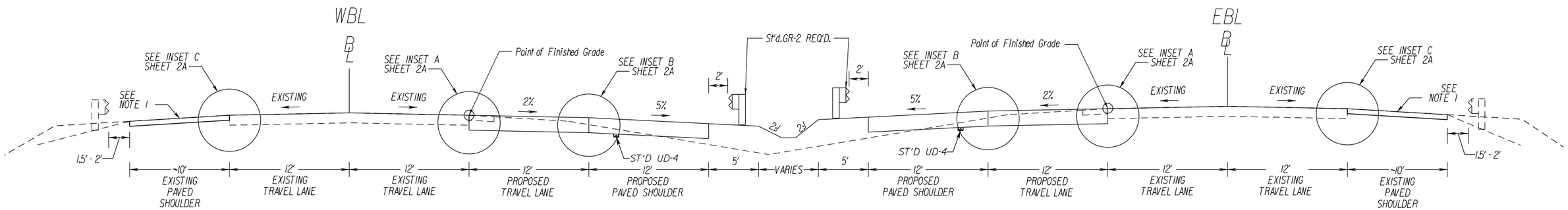

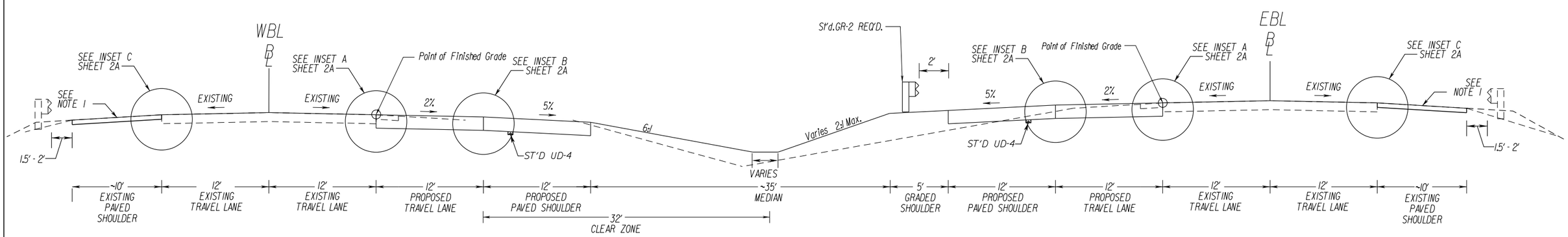

NOTES

1. EXISTING OUTSIDE SHOULDER TO BE REPLACED ONLY FROM STA.1602+84.80 TO STA.1782+43.23

Not To Scale	PROJECT 0064-965-264	SHEET NO. 2B

PROJECT MANAGER Shirley Contracting Company, LLC
SURVEYED BY, DATE
DESIGN BY Dewberry
SUBSURFACE UTILITY BY, DATE

TYPICAL SECTIONS
I-64 MAINLINE

THESE PLANS ARE UNFINISHED AND UNAPPROVED AND ARE NOT TO BE USED FOR ANY TYPE OF CONSTRUCTION OR THE ACQUISITION OF RIGHT OF WAY.

SHIRLEY CONTRACTING COMPANY, LLC
Dewberry

LIMITED ACCESS HIGHWAY By Resolution of Highway Commission dated October 4, 1956

REVISED	STATE	STATE ROUTE	STATE PROJECT	SHEET NO.
	VA.	64	0064-965-264, R-201, C-501	2C

DESIGN FEATURES RELATING TO CONSTRUCTION OR TO REGULATION AND CONTROL OF TRAFFIC MAY BE SUBJECT TO CHANGE AS DEEMED NECESSARY BY THE DEPARTMENT

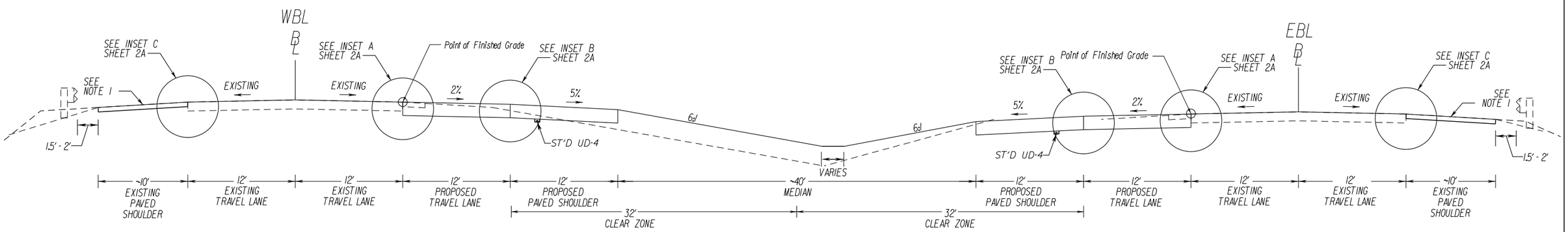

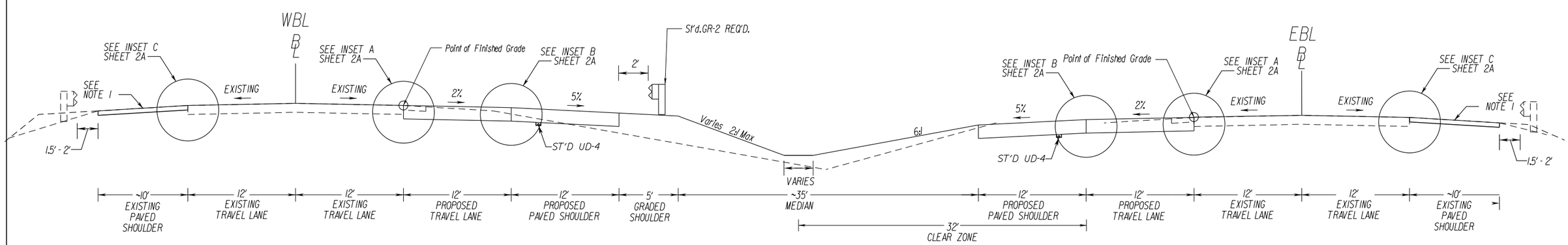

NOTES
1. EXISTING OUTSIDE SHOULDER TO BE REPLACED ONLY FROM STA.1602+84.80 TO STA.1782+43.23

Not To Scale	PROJECT 0064-965-264	SHEET NO. 2C

LIMITED ACCESS HIGHWAY By Resolution of Highway Commission dated October 4, 1956

PROJECT MANAGER Shirley Contracting Company, LLC
SURVEYED BY, DATE
DESIGN BY Dewberry
SUBSURFACE UTILITY BY, DATE

REVISED	STATE	STATE ROUTE	STATE PROJECT	SHEET NO.
	VA.	64	0064-965-264, R-201, C-501	3

THESE PLANS ARE UNFINISHED AND UNAPPROVED AND ARE NOT TO BE USED FOR ANY TYPE OF CONSTRUCTION OR THE ACQUISITION OF RIGHT OF WAY.

SHIRLEY CONTRACTING COMPANY, LLC

Dewberry

DESIGN FEATURES RELATING TO CONSTRUCTION OR TO REGULATION AND CONTROL OF TRAFFIC MAY BE SUBJECT TO CHANGE AS DEEMED NECESSARY BY THE DEPARTMENT

LEGEND

- Denotes Prop.12' Lane
- Denotes Existing Pavement (Typ.2-12' Lanes + Shoulder)
- Denotes Prop.12-14' Paved Shoulder
- Denotes Prop.Outside Shoulder Strengthening
- Difference Between Required ROW/Easement From RFP Plans And Proposed Design Concept
- Dot - Dot - Dashed Lines Denote Temporary Easements
- Dot - Dashed Lines Denote Permanent Easements
- Solid Lines Denote Right of Way
- C Denotes Construction Limits In Cuts
- F Denotes Construction Limits In Fills

Note: Additional Utility Easements may be required.

SCALE 0 50' 100'

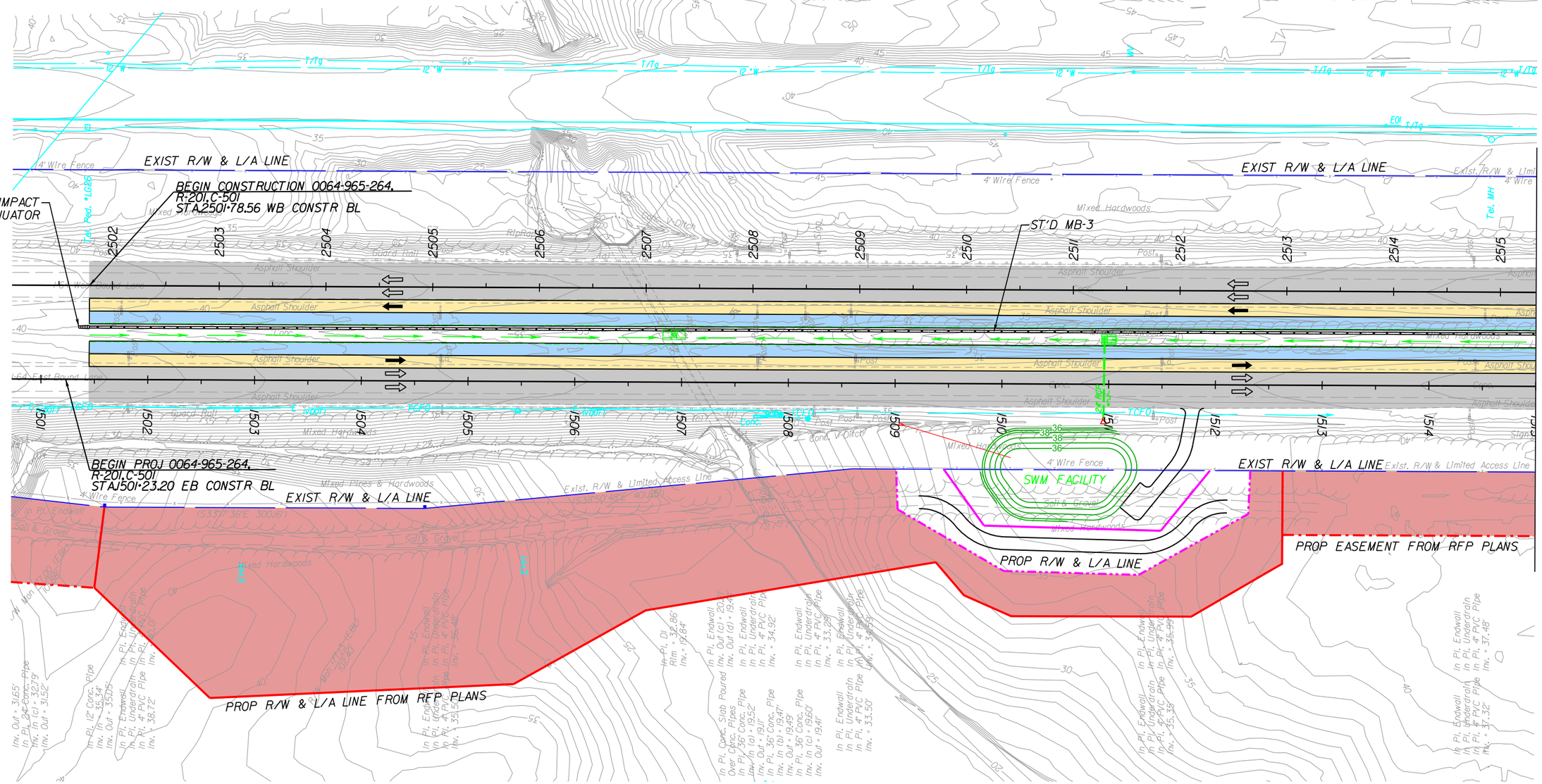

PROJECT	SHEET NO.
0064-965-264	3

LIMITED ACCESS HIGHWAY — By Resolution of Highway Commission dated October 4, 1956

PROJECT MANAGER Shirley Contracting Company, LLC
SURVEYED BY, DATE
DESIGN BY Dewberry
SUBSURFACE UTILITY BY, DATE

LEGEND

- Denotes Prop. 12' Lane
- Denotes Existing Pavement (Typ. 2-12' Lanes + Shoulder)
- Denotes Prop. 12-14' Paved Shoulder
- Denotes Prop. Outside Shoulder Strengthening
- Difference Between Required ROW/Easement From RFP Plans And Proposed Design Concept
- Dot - Dot - Dashed Lines Denote Temporary Easements
- Dot - Dashed Lines Denote Permanent Easements
- Solid Lines Denote Right of Way
- C — Denotes Construction Limits In Cuts
- F — Denotes Construction Limits In Fills

Note: Additional Utility Easements may be required.

SCALE 0 50' 100'

THESE PLANS ARE UNFINISHED AND UNAPPROVED AND ARE NOT TO BE USED FOR ANY TYPE OF CONSTRUCTION OR THE ACQUISITION OF RIGHT OF WAY.

SHIRLEY CONTRACTING COMPANY, LLC
Dewberry

DESIGN FEATURES RELATING TO CONSTRUCTION OR TO REGULATION AND CONTROL OF TRAFFIC MAY BE SUBJECT TO CHANGE AS DEEMED NECESSARY BY THE DEPARTMENT

REVISED	STATE	ROUTE	PROJECT	SHEET NO.
	VA.	64	0064-965-264, R-201, C-501	4

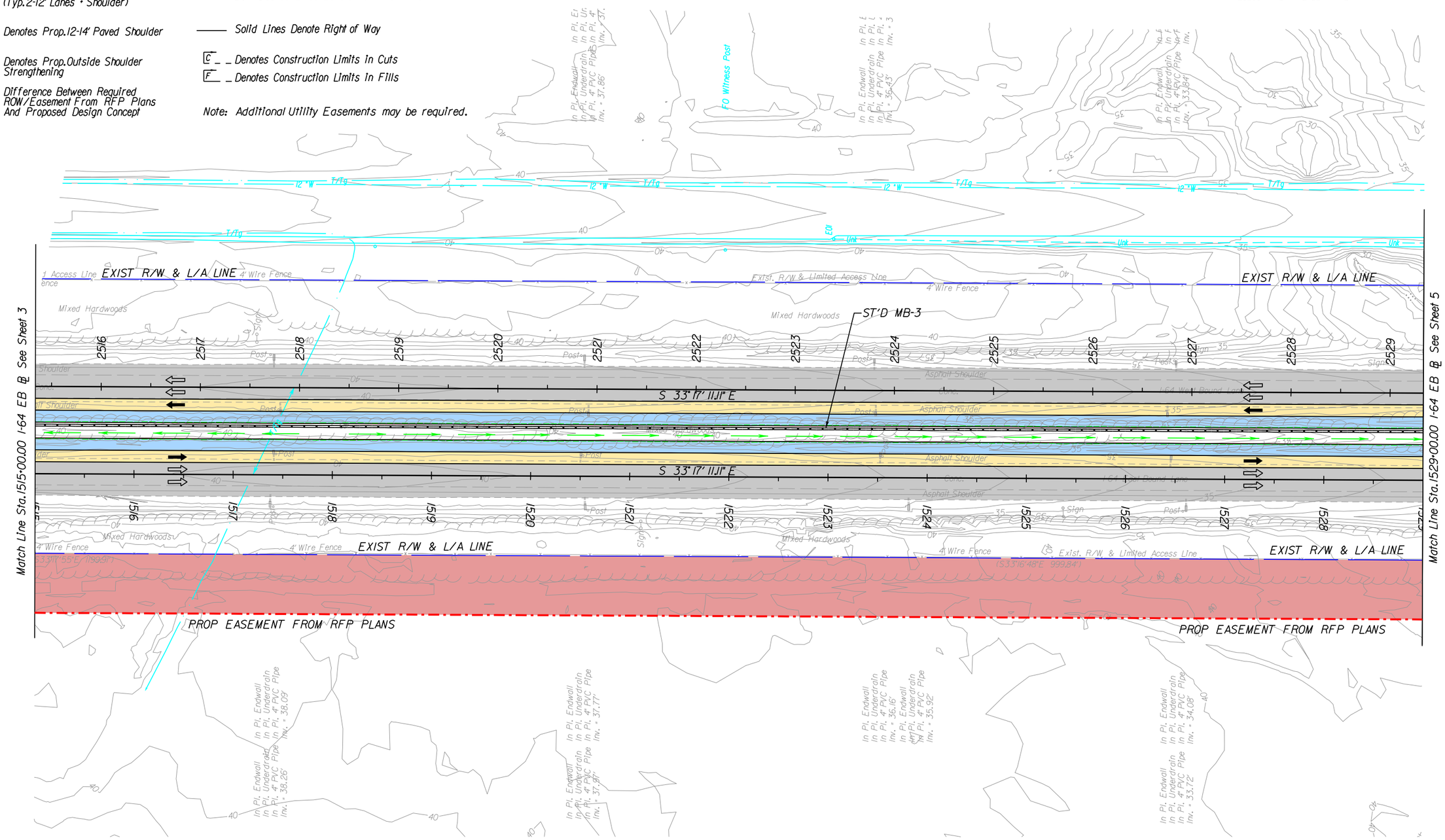

PROJECT	SHEET NO.
0064-965-264	4

LIMITED ACCESS HIGHWAY By Resolution of Highway Commission dated October 4, 1956

PROJECT MANAGER Shirley Contracting Company, LLC
SURVEYED BY, DATE
DESIGN BY Dewberry
SUBSURFACE UTILITY BY, DATE

LEGEND

- Denotes Prop. 12' Lane
- Denotes Existing Pavement (Typ. 2-12' Lanes + Shoulder)
- Denotes Prop. 12-14' Paved Shoulder
- Denotes Prop. Outside Shoulder Strengthening
- Difference Between Required ROW/Easement From RFP Plans And Proposed Design Concept
- Dot - Dot - Dashed Lines Denote Temporary Easements
- Dot - Dashed Lines Denote Permanent Easements
- Solid Lines Denote Right of Way
- C Denotes Construction Limits In Cuts
- F Denotes Construction Limits In Fills

Note: Additional Utility Easements may be required.

SCALE 0 50' 100'

THESE PLANS ARE UNFINISHED AND UNAPPROVED AND ARE NOT TO BE USED FOR ANY TYPE OF CONSTRUCTION OR THE ACQUISITION OF RIGHT OF WAY.

SHIRLEY CONTRACTING COMPANY, LLC
Dewberry

DESIGN FEATURES RELATING TO CONSTRUCTION OR TO REGULATION AND CONTROL OF TRAFFIC MAY BE SUBJECT TO CHANGE AS DEEMED NECESSARY BY THE DEPARTMENT

REVISED	STATE	STATE ROUTE	STATE PROJECT	SHEET NO.
	VA.	64	0064-965-264, R-201, C-501	5

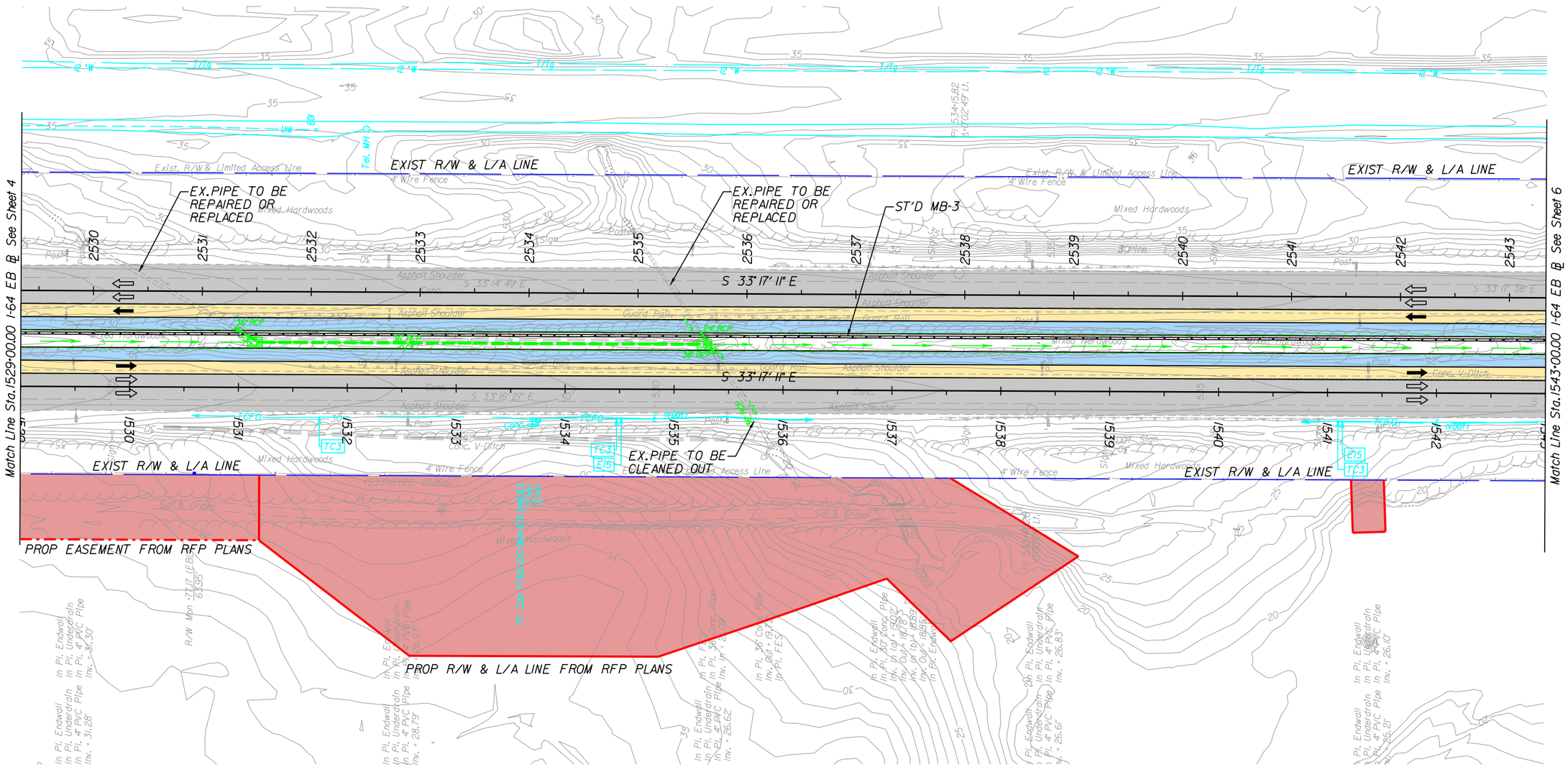

PROJECT	SHEET NO.
0064-965-264	5

LIMITED ACCESS HIGHWAY By Resolution of Highway Commission dated October 4, 1956

PROJECT MANAGER Shirley Contracting Company, LLC
SURVEYED BY, DATE
DESIGN BY Dewberry
SUBSURFACE UTILITY BY, DATE

LEGEND

- Denotes Prop.12' Lane
- Denotes Existing Pavement (Typ.2-12' Lanes + Shoulder)
- Denotes Prop.12-14' Paved Shoulder
- Denotes Prop.Outside Shoulder Strengthening
- Difference Between Required ROW/Easement From RFP Plans And Proposed Design Concept
- Dot - Dot - Dashed Lines Denote Temporary Easements
- Dot - Dashed Lines Denote Permanent Easements
- Solid Lines Denote Right of Way
- C Denotes Construction Limits In Cuts
- F Denotes Construction Limits In Fills

Note: Additional Utility Easements may be required.

SCALE 0 50' 100'

THESE PLANS ARE UNFINISHED AND UNAPPROVED AND ARE NOT TO BE USED FOR ANY TYPE OF CONSTRUCTION OR THE ACQUISITION OF RIGHT OF WAY.

SHIRLEY CONTRACTING COMPANY, LLC
Dewberry

DESIGN FEATURES RELATING TO CONSTRUCTION OR TO REGULATION AND CONTROL OF TRAFFIC MAY BE SUBJECT TO CHANGE AS DEEMED NECESSARY BY THE DEPARTMENT

REVISED	STATE	STATE ROUTE	STATE PROJECT	SHEET NO.
	VA.	64	0064-965-264, R-201, C-501	6

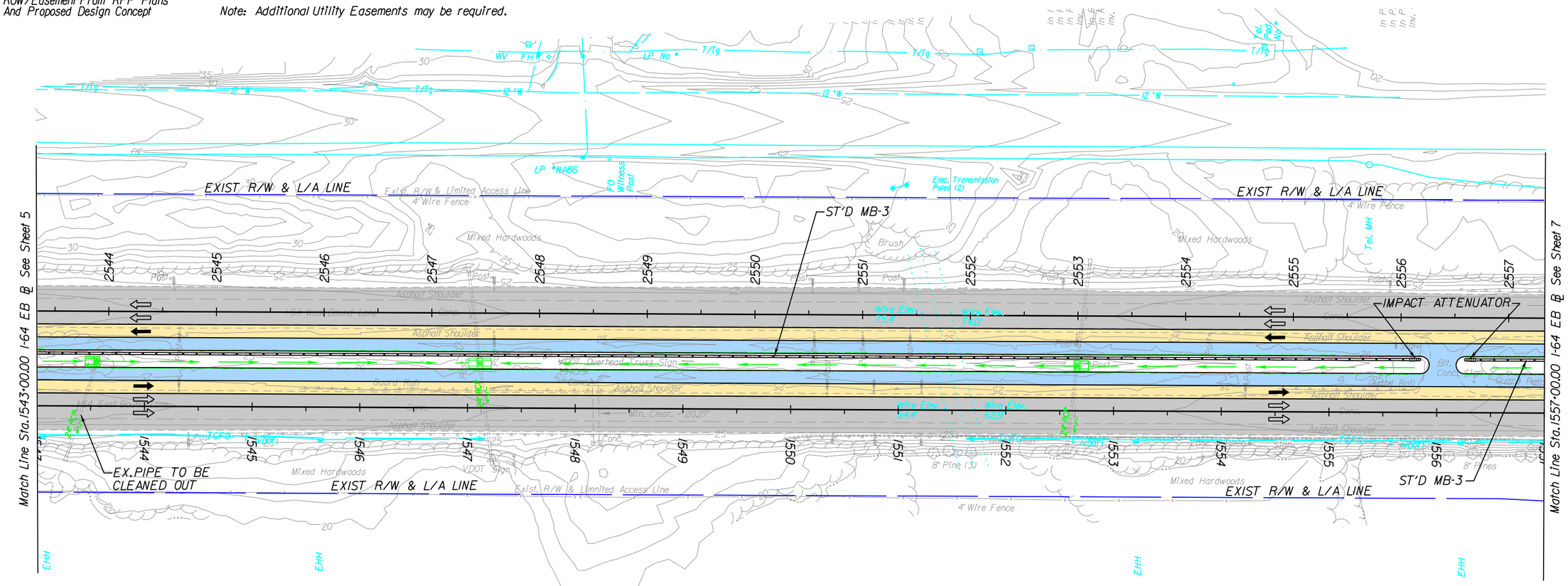

PROJECT	SHEET NO.
0064-965-264	6

LIMITED ACCESS HIGHWAY By Resolution of Highway Commission dated October 4, 1956

PROJECT MANAGER Shirley Contracting Company, LLC
SURVEYED BY, DATE
DESIGN BY Dewberry
SUBSURFACE UTILITY BY, DATE

LEGEND

- Denotes Prop. 12' Lane
- Denotes Existing Pavement (Typ. 2-12' Lanes + Shoulder)
- Denotes Prop. 12-14' Paved Shoulder
- Denotes Prop. Outside Shoulder Strengthening
- Difference Between Required ROW/Easement From RFP Plans And Proposed Design Concept
- Dot - Dot - Dashed Lines Denote Temporary Easements
- Dot - Dashed Lines Denote Permanent Easements
- Solid Lines Denote Right of Way
- C _ _ Denotes Construction Limits In Cuts
- F _ _ Denotes Construction Limits In Fills

Note: Additional Utility Easements may be required.

SCALE 0 50' 100'

THESE PLANS ARE UNFINISHED AND UNAPPROVED AND ARE NOT TO BE USED FOR ANY TYPE OF CONSTRUCTION OR THE ACQUISITION OF RIGHT OF WAY.

SHIRLEY CONTRACTING COMPANY, LLC
Dewberry

DESIGN FEATURES RELATING TO CONSTRUCTION OR TO REGULATION AND CONTROL OF TRAFFIC MAY BE SUBJECT TO CHANGE AS DEEMED NECESSARY BY THE DEPARTMENT

REVISED	STATE	ROUTE	PROJECT	SHEET NO.
	VA.	64	0064-965-264, R-201, C-501, B-620, B-621	7

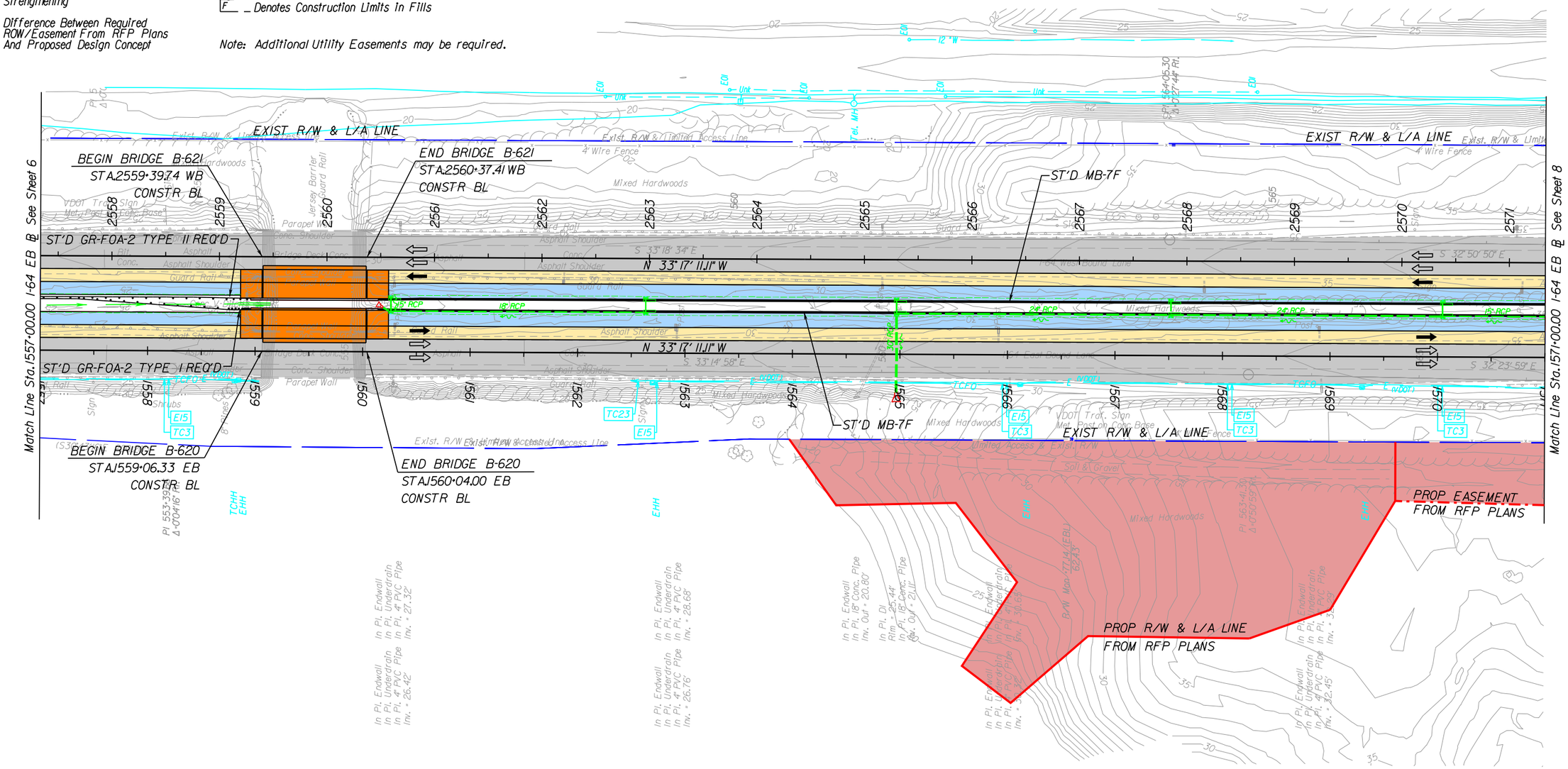

PROJECT	SHEET NO.
0064-965-264	7

PROJECT MANAGER Shirley Contracting Company, LLC
SURVEYED BY, DATE
DESIGN BY Dewberry
SUBSURFACE UTILITY BY, DATE

LIMITED ACCESS HIGHWAY By Resolution of Highway Commission dated October 4, 1956

REVISED	STATE	STATE ROUTE	STATE PROJECT	SHEET NO.
	VA.	64	0064-965-264, R-201, C-501	8

THESE PLANS ARE UNFINISHED AND UNAPPROVED AND ARE NOT TO BE USED FOR ANY TYPE OF CONSTRUCTION OR THE ACQUISITION OF RIGHT OF WAY.

SHIRLEY CONTRACTING COMPANY, LLC
Dewberry

DESIGN FEATURES RELATING TO CONSTRUCTION OR TO REGULATION AND CONTROL OF TRAFFIC MAY BE SUBJECT TO CHANGE AS DEEMED NECESSARY BY THE DEPARTMENT

LEGEND

- Denotes Prop.12' Lane
- Denotes Existing Pavement (Typ.2-12' Lanes + Shoulder)
- Denotes Prop.12-14' Paved Shoulder
- Denotes Prop.Outside Shoulder Strengthening
- Difference Between Required ROW/Easement From RFP Plans And Proposed Design Concept
- Dot - Dot - Dashed Lines Denote Temporary Easements
- Dot - Dashed Lines Denote Permanent Easements
- Solid Lines Denote Right of Way
- C _ _ Denotes Construction Limits In Cuts
- F _ _ Denotes Construction Limits In Fills

Note: Additional Utility Easements may be required.

SCALE 0 50' 100'

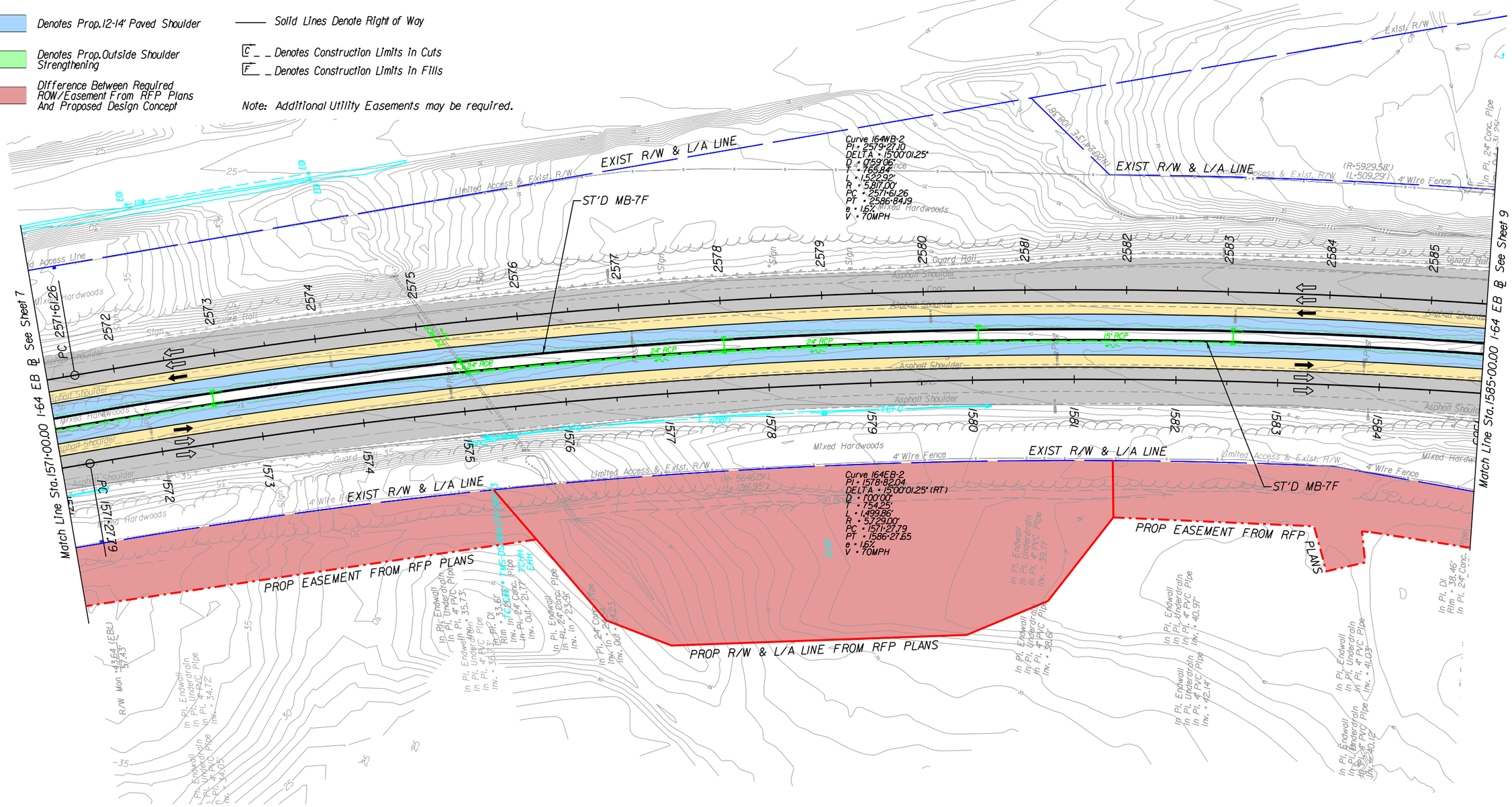

PROJECT	SHEET NO.
0064-965-264	8

LIMITED ACCESS HIGHWAY By Resolution of Highway Commission dated October 4, 1956

PROJECT MANAGER Shirley Contracting Company, LLC
SURVEYED BY, DATE
DESIGN BY Dewberry
SUBSURFACE UTILITY BY, DATE

REVISED	STATE	STATE ROUTE	STATE PROJECT	SHEET NO.
	VA.	64	0064-965-264, R-201, C-501	9

THESE PLANS ARE UNFINISHED AND UNAPPROVED AND ARE NOT TO BE USED FOR ANY TYPE OF CONSTRUCTION OR THE ACQUISITION OF RIGHT OF WAY.

SHIRLEY CONTRACTING COMPANY, LLC
Dewberry

DESIGN FEATURES RELATING TO CONSTRUCTION OR TO REGULATION AND CONTROL OF TRAFFIC MAY BE SUBJECT TO CHANGE AS DEEMED NECESSARY BY THE DEPARTMENT

LEGEND

- Denotes Prop.12' Lane
- Denotes Existing Pavement (Typ.2-12' Lanes + Shoulder)
- Denotes Prop.12-14' Paved Shoulder
- Denotes Prop.Outside Shoulder Strengthening
- Difference Between Required ROW/Easement From RFP Plans And Proposed Design Concept
- Dot - Dot - Dashed Lines Denote Temporary Easements
- Dot - Dashed Lines Denote Permanent Easements
- Solid Lines Denote Right of Way
- C Denotes Construction Limits In Cuts
- F Denotes Construction Limits In Fills

Note: Additional Utility Easements may be required.

SCALE 0 50' 100'

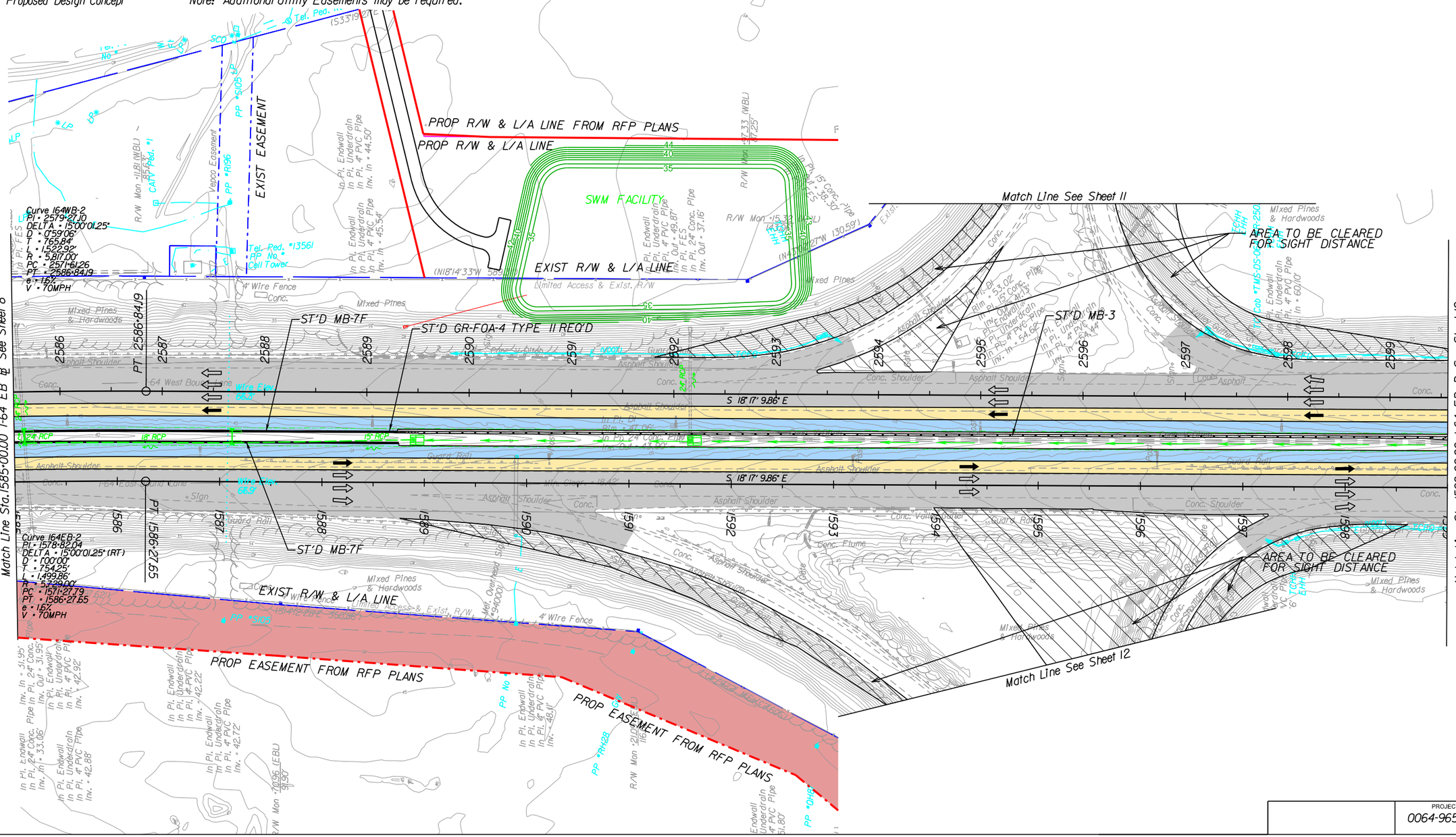

PROJECT	SHEET NO.
0064-965-264	9

PROJECT MANAGER Shirley Contracting Company, LLC
SURVEYED BY, DATE
DESIGN BY Dewberry
SUBSURFACE UTILITY BY, DATE

LIMITED ACCESS HIGHWAY — By Resolution of Highway Commission dated October 4, 1956

REVISED	STATE	STATE ROUTE	STATE PROJECT	SHEET NO.
	VA.	64	0064-965-264, R-201, C-501, B-618, B-619	10

THESE PLANS ARE UNFINISHED AND UNAPPROVED AND ARE NOT TO BE USED FOR ANY TYPE OF CONSTRUCTION OR THE ACQUISITION OF RIGHT OF WAY.

SHIRLEY CONTRACTING COMPANY, LLC
Dewberry

DESIGN FEATURES RELATING TO CONSTRUCTION OR TO REGULATION AND CONTROL OF TRAFFIC MAY BE SUBJECT TO CHANGE AS DEEMED NECESSARY BY THE DEPARTMENT

LEGEND

- Denotes Prop. 12' Lane
- Denotes Existing Pavement (Typ. 2-12' Lanes + Shoulder)
- Denotes Prop. 12-14' Paved Shoulder
- Denotes Prop. Outside Shoulder Strengthening
- Difference Between Required ROW/Easement From RFP Plans And Proposed Design Concept
- Dot - Dot - Dashed Lines Denote Temporary Easements
- Dot - Dashed Lines Denote Permanent Easements
- Solid Lines Denote Right of Way
- C — Denotes Construction Limits In Cuts
- F — Denotes Construction Limits In Fills

Note: Additional Utility Easements may be required.

SCALE 0 50' 100'

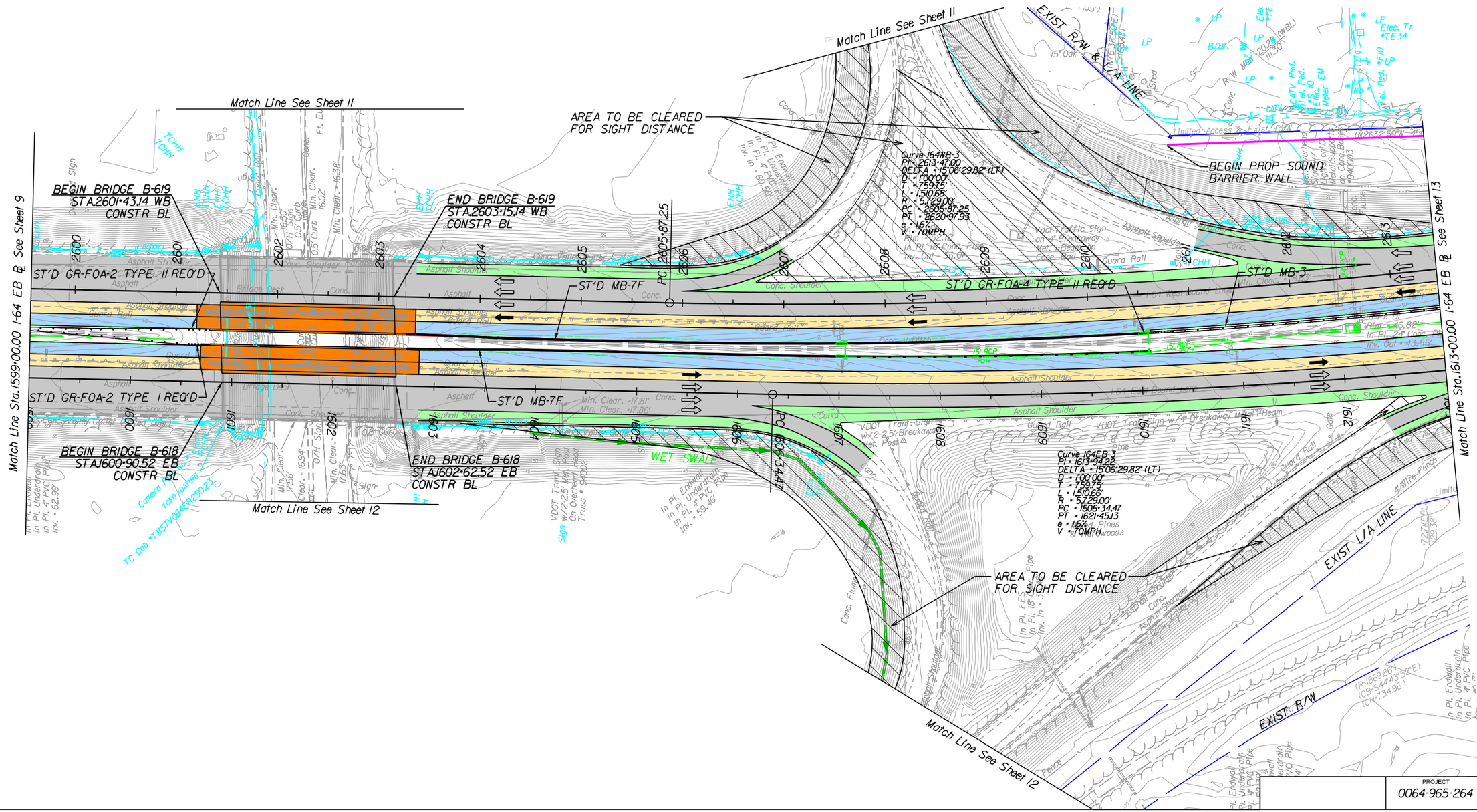

PROJECT	SHEET NO.
0064-965-264	10

LIMITED ACCESS HIGHWAY By Resolution of Highway Commission dated October 4, 1956

PROJECT MANAGER Shirley Contracting Company, LLC
SURVEYED BY, DATE
DESIGN BY Dewberry
SUBSURFACE UTILITY BY, DATE

REVISED	STATE	STATE ROUTE	STATE PROJECT	SHEET NO.
	VA.	64	0064-965-264, R-201, C-501	10(1)

THESE PLANS ARE UNFINISHED AND UNAPPROVED AND ARE NOT TO BE USED FOR ANY TYPE OF CONSTRUCTION OR THE ACQUISITION OF RIGHT OF WAY.

SHIRLEY CONTRACTING COMPANY, LLC
Dewberry

DESIGN FEATURES RELATING TO CONSTRUCTION OR TO REGULATION AND CONTROL OF TRAFFIC MAY BE SUBJECT TO CHANGE AS DEEMED NECESSARY BY THE DEPARTMENT

LEGEND

- Denotes Prop.12' Lane
- Denotes Existing Pavement (Typ.2-12' Lanes + Shoulder)
- Denotes Prop.12-14' Paved Shoulder
- Denotes Prop.Outside Shoulder Strengthening
- Difference Between Required ROW/Easement From RFP Plans And Proposed Design Concept
- Dot - Dot - Dashed Lines Denote Temporary Easements
- Dot - Dashed Lines Denote Permanent Easements
- Solid Lines Denote Right of Way
- C _ _ Denotes Construction Limits In Cuts
- F _ _ Denotes Construction Limits In Fills

Note: Additional Utility Easements may be required.

SCALE 0 100' 200'

OPTION 2

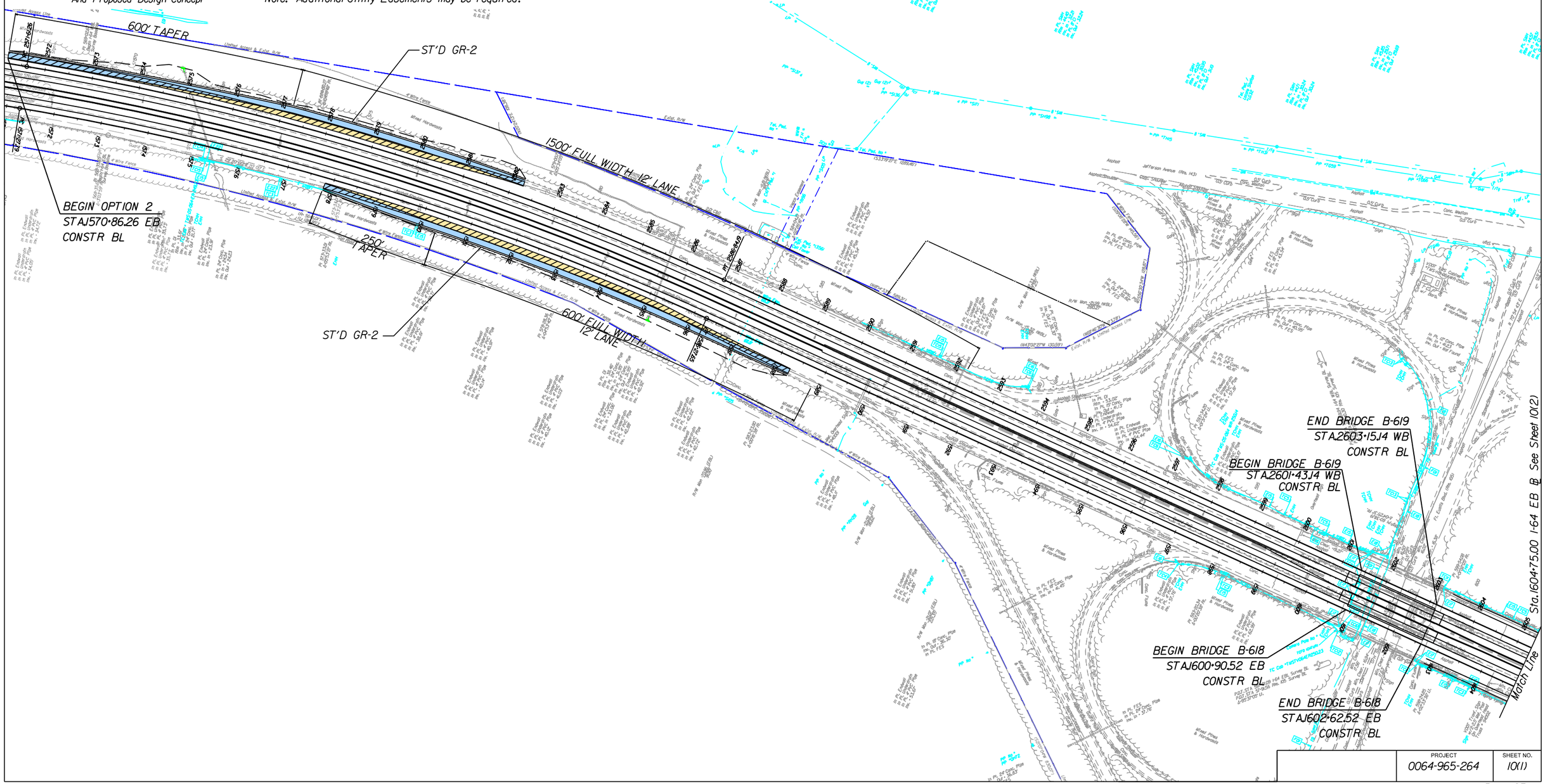

PROJECT	SHEET NO.
0064-965-264	10(1)

LIMITED ACCESS HIGHWAY By Resolution of Highway Commission dated October 4, 1956

PROJECT MANAGER Shirley Contracting Company, LLC
SURVEYED BY, DATE
DESIGN BY Dewberry
SUBSURFACE UTILITY BY, DATE

REVISED	STATE	STATE ROUTE	STATE PROJECT	SHEET NO.
	VA.	64	0064-965-264, R-201, C-501	10(2)

THESE PLANS ARE UNFINISHED AND UNAPPROVED AND ARE NOT TO BE USED FOR ANY TYPE OF CONSTRUCTION OR THE ACQUISITION OF RIGHT OF WAY.

SHIRLEY CONTRACTING COMPANY, LLC
Dewberry

DESIGN FEATURES RELATING TO CONSTRUCTION OR TO REGULATION AND CONTROL OF TRAFFIC MAY BE SUBJECT TO CHANGE AS DEEMED NECESSARY BY THE DEPARTMENT

LEGEND

- Denotes Prop.12' Lane
- Denotes Existing Pavement (Typ.2-12' Lanes + Shoulder)
- Denotes Prop.12-14' Paved Shoulder
- Denotes Prop.Outside Shoulder Strengthening
- Difference Between Required ROW/Easement From RFP Plans And Proposed Design Concept
- Dot - Dot - Dashed Lines Denote Temporary Easements
- Dot - Dashed Lines Denote Permanent Easements
- Solid Lines Denote Right of Way
- C _ _ Denotes Construction Limits In Cuts
- F _ _ Denotes Construction Limits In Fills

Note: Additional Utility Easements may be required.

SCALE 0 100' 200'

OPTION 2

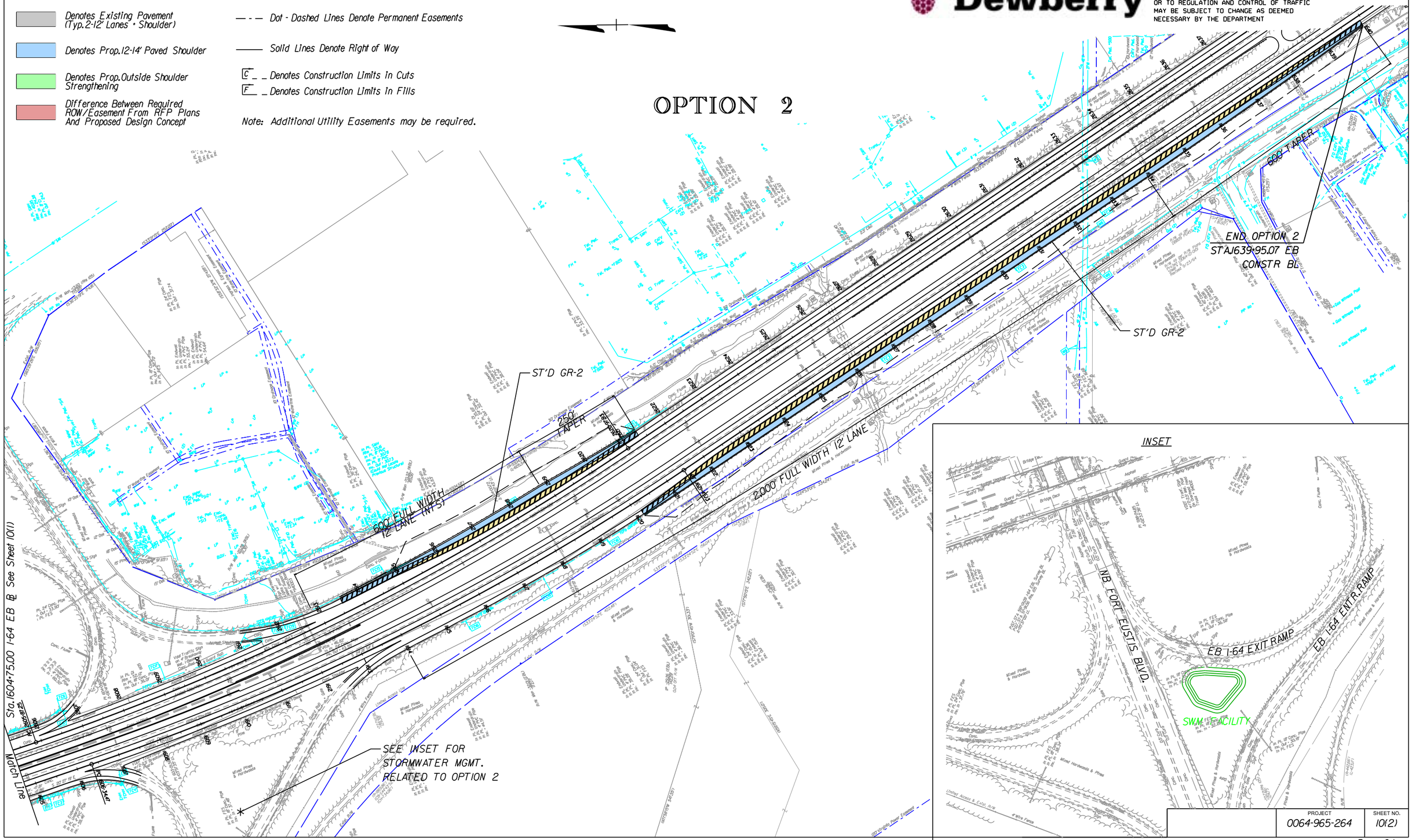

PROJECT	SHEET NO.
0064-965-264	10(2)

LIMITED ACCESS HIGHWAY

By Resolution of Highway Commission dated October 4, 1956

PROJECT MANAGER Shirley Contracting Company, LLC
SURVEYED BY, DATE
DESIGN BY Dewberry
SUBSURFACE UTILITY BY, DATE

REVISED	STATE	STATE ROUTE	STATE PROJECT	SHEET NO.
	VA.	64	0064-965-264, R-201, C-501	11

THESE PLANS ARE UNFINISHED AND UNAPPROVED AND ARE NOT TO BE USED FOR ANY TYPE OF CONSTRUCTION OR THE ACQUISITION OF RIGHT OF WAY.

SHIRLEY CONTRACTING COMPANY, LLC

Dewberry

DESIGN FEATURES RELATING TO CONSTRUCTION OR TO REGULATION AND CONTROL OF TRAFFIC MAY BE SUBJECT TO CHANGE AS DEEMED NECESSARY BY THE DEPARTMENT

LEGEND

- Denotes Prop. 12' Lane
- Denotes Existing Pavement (Typ. 2-12' Lanes + Shoulder)
- Denotes Prop. 12-14' Paved Shoulder
- Denotes Prop. Outside Shoulder Strengthening
- Difference Between Required ROW/Easement From RFP Plans And Proposed Design Concept
- Dot - Dot - Dashed Lines Denote Temporary Easements
- Dot - Dashed Lines Denote Permanent Easements
- Solid Lines Denote Right of Way
- C _ _ Denotes Construction Limits In Cuts
- F _ _ Denotes Construction Limits In Fills

Note: Additional Utility Easements may be required.

SCALE 0 50' 100'

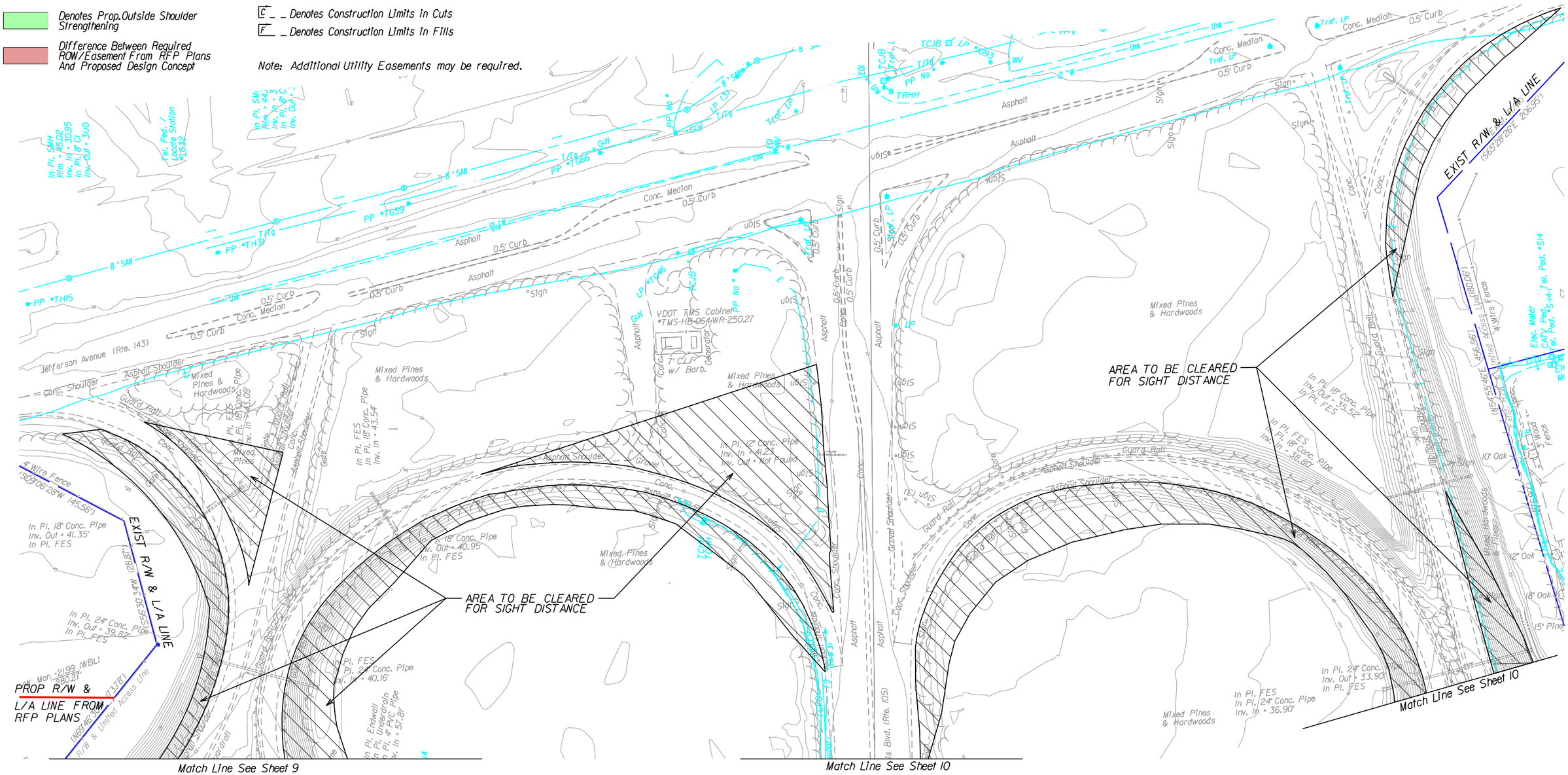

PROJECT	SHEET NO.
0064-965-264	11

LIMITED ACCESS HIGHWAY By Resolution of Highway Commission dated October 4, 1956

PROJECT MANAGER Shirley Contracting Company, LLC
SURVEYED BY, DATE
DESIGN BY Dewberry
SUBSURFACE UTILITY BY, DATE

LEGEND

- Denotes Prop.12' Lane
- Denotes Existing Pavement (Typ.2-12' Lanes + Shoulder)
- Denotes Prop.12-14' Paved Shoulder
- Denotes Prop.Outside Shoulder Strengthening
- Difference Between Required ROW/Easement From RFP Plans And Proposed Design Concept
- Dot - Dot - Dashed Lines Denote Temporary Easements
- Dot - Dashed Lines Denote Permanent Easements
- Solid Lines Denote Right of Way
- C Denotes Construction Limits In Cuts
- F Denotes Construction Limits In Fills

Note: Additional Utility Easements may be required.

SCALE 0 50' 100'

THESE PLANS ARE UNFINISHED AND UNAPPROVED AND ARE NOT TO BE USED FOR ANY TYPE OF CONSTRUCTION OR THE ACQUISITION OF RIGHT OF WAY.

SHIRLEY CONTRACTING COMPANY, LLC
Dewberry

DESIGN FEATURES RELATING TO CONSTRUCTION OR TO REGULATION AND CONTROL OF TRAFFIC MAY BE SUBJECT TO CHANGE AS DEEMED NECESSARY BY THE DEPARTMENT

REVISED	STATE	STATE ROUTE	STATE PROJECT	SHEET NO.
	VA.	64	0064-965-264, R-201, C-501	12

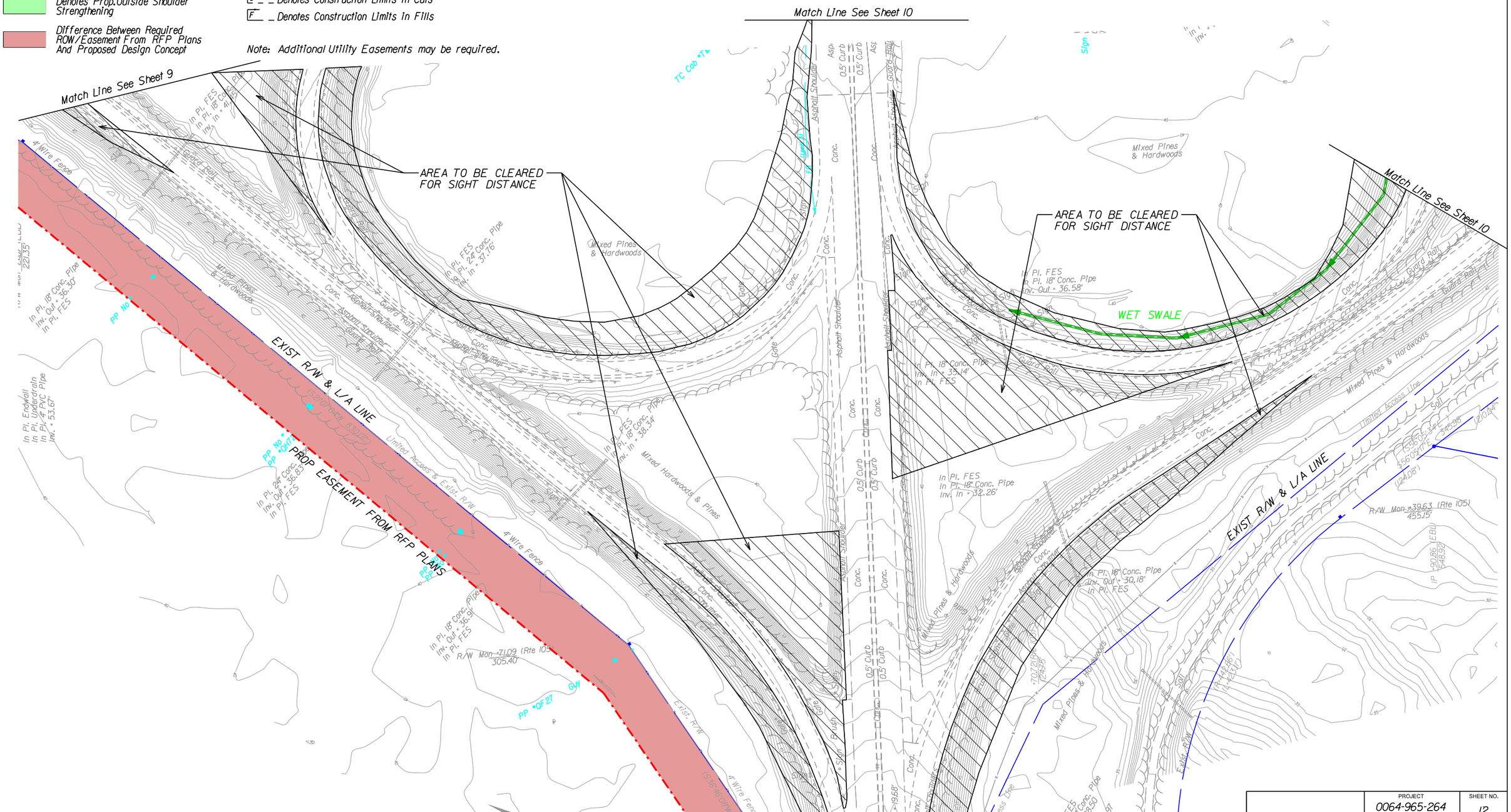

PROJECT	SHEET NO.
0064-965-264	12

LIMITED ACCESS HIGHWAY By Resolution of Highway Commission dated October 4, 1956

PROJECT MANAGER Shirley Contracting Company, LLC
SURVEYED BY, DATE
DESIGN BY Dewberry
SUBSURFACE UTILITY BY, DATE

REVISED	STATE	STATE ROUTE	STATE PROJECT	SHEET NO.
	VA.	64	0064-965-264, R-201, C-501	13

THESE PLANS ARE UNFINISHED AND UNAPPROVED AND ARE NOT TO BE USED FOR ANY TYPE OF CONSTRUCTION OR THE ACQUISITION OF RIGHT OF WAY.

SHIRLEY CONTRACTING COMPANY, LLC
Dewberry

DESIGN FEATURES RELATING TO CONSTRUCTION OR TO REGULATION AND CONTROL OF TRAFFIC MAY BE SUBJECT TO CHANGE AS DEEMED NECESSARY BY THE DEPARTMENT

LEGEND

- Denotes Prop.12' Lane
- Denotes Existing Pavement (Typ.2-12' Lanes + Shoulder)
- Denotes Prop.12-14' Paved Shoulder
- Denotes Prop.Outside Shoulder Strengthening
- Difference Between Required ROW/Easement From RFP Plans And Proposed Design Concept
- Dot - Dot - Dashed Lines Denote Temporary Easements
- Dot - Dashed Lines Denote Permanent Easements
- Solid Lines Denote Right of Way
- C _ _ Denotes Construction Limits In Cuts
- F _ _ Denotes Construction Limits In Fills

Note: Additional Utility Easements may be required.

SCALE 0 50' 100'

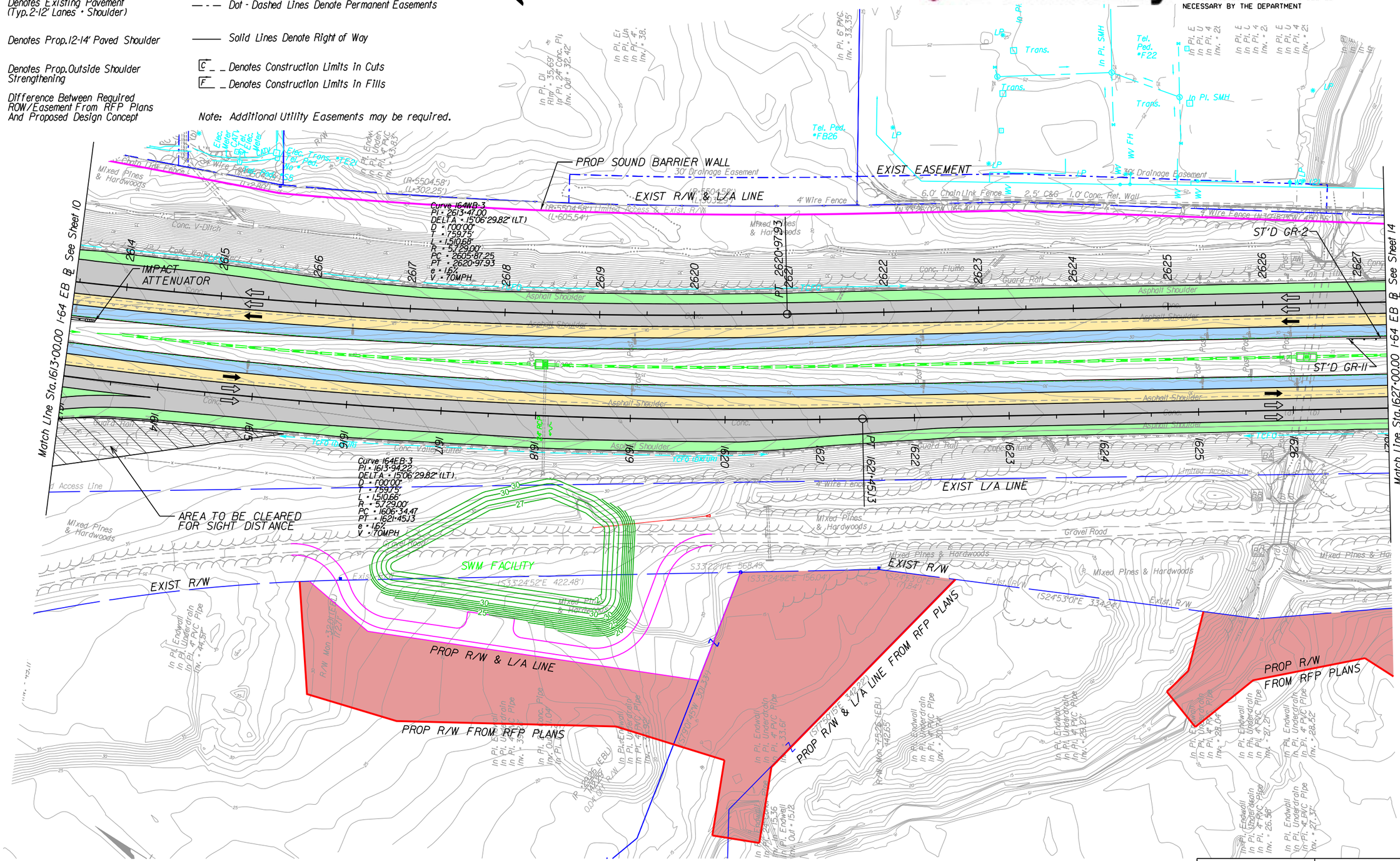

PROJECT	SHEET NO.
0064-965-264	13

PROJECT MANAGER Shirley Contracting Company, LLC
SURVEYED BY, DATE
DESIGN BY Dewberry
SUBSURFACE UTILITY BY, DATE

LEGEND

- Denotes Prop. 12' Lane
- Denotes Existing Pavement (Typ. 2-12' Lanes + Shoulder)
- Denotes Prop. 12-14' Paved Shoulder
- Denotes Prop. Outside Shoulder Strengthening
- Difference Between Required ROW/Easement From RFP Plans And Proposed Design Concept
- Dot - Dot - Dashed Lines Denote Temporary Easements
- Dot - Dashed Lines Denote Permanent Easements
- Solid Lines Denote Right of Way
- C _ _ Denotes Construction Limits In Cuts
- F _ _ Denotes Construction Limits In Fills

Note: Additional Utility Easements may be required.

SCALE 0 50' 100'

THESE PLANS ARE UNFINISHED AND UNAPPROVED AND ARE NOT TO BE USED FOR ANY TYPE OF CONSTRUCTION OR THE ACQUISITION OF RIGHT OF WAY.

SHIRLEY CONTRACTING COMPANY, LLC
Dewberry

LIMITED ACCESS HIGHWAY By Resolution of Highway Commission dated October 4, 1956

REVISED	STATE	ROUTE	PROJECT	SHEET NO.
	VA.	64	0064-965-264, R-201, C-501	14

DESIGN FEATURES RELATING TO CONSTRUCTION OR TO REGULATION AND CONTROL OF TRAFFIC MAY BE SUBJECT TO CHANGE AS DEEMED NECESSARY BY THE DEPARTMENT

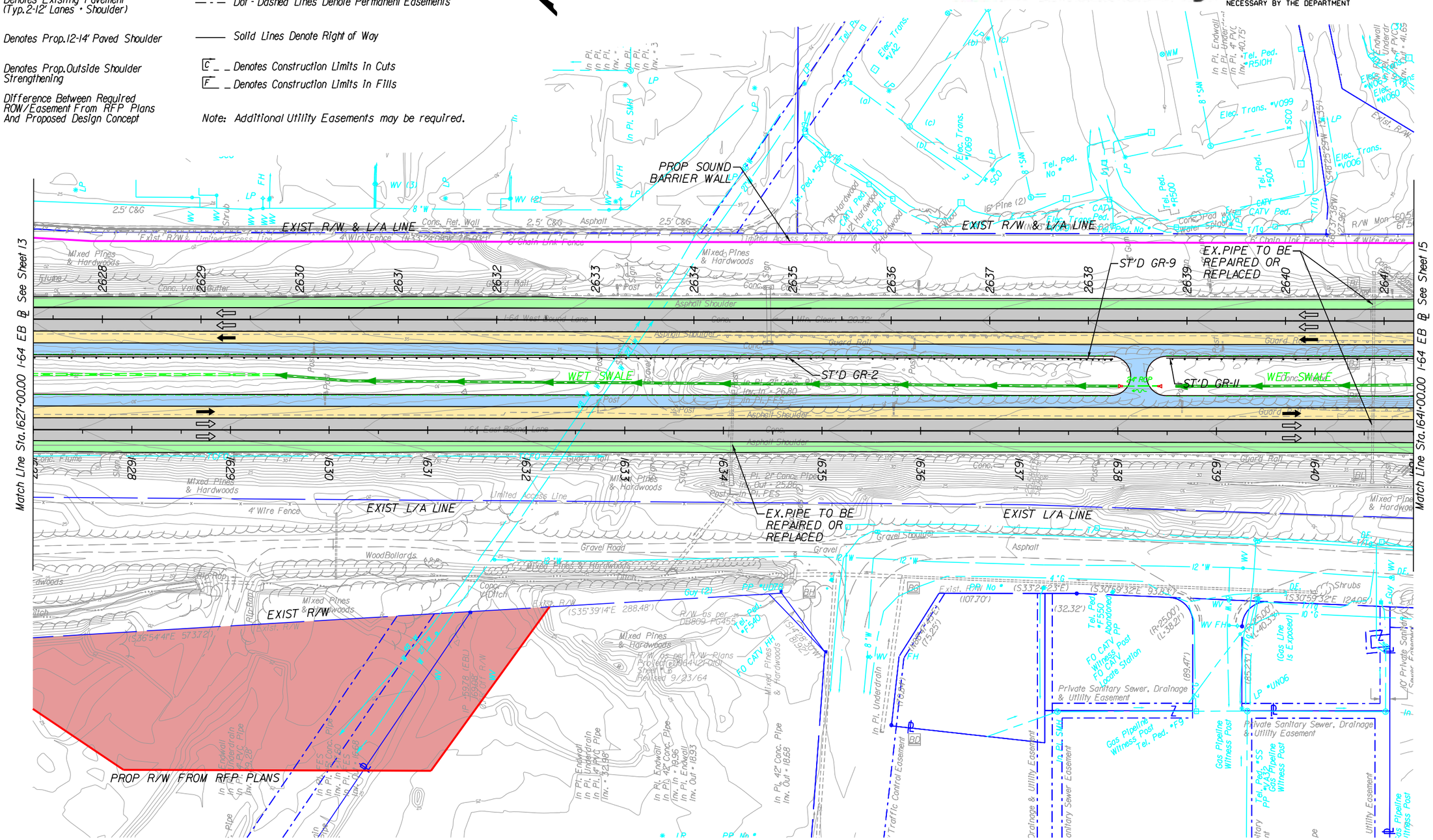

PROJECT	SHEET NO.
0064-965-264	14

PROJECT MANAGER Shirley Contracting Company, LLC
SURVEYED BY, DATE
DESIGN BY Dewberry
SUBSURFACE UTILITY BY, DATE

LEGEND

- Denotes Prop. 12' Lane
- Denotes Existing Pavement (Typ. 2-12' Lanes + Shoulder)
- Denotes Prop. 12-14' Paved Shoulder
- Denotes Prop. Outside Shoulder Strengthening
- Difference Between Required ROW/Easement From RFP Plans And Proposed Design Concept
- Dot - Dot - Dashed Lines Denote Temporary Easements
- Dot - Dashed Lines Denote Permanent Easements
- Solid Lines Denote Right of Way
- C _ _ Denotes Construction Limits In Cuts
- F _ _ Denotes Construction Limits In Fills

Note: Additional Utility Easements may be required.

SCALE 0 50' 100'

THESE PLANS ARE UNFINISHED AND UNAPPROVED AND ARE NOT TO BE USED FOR ANY TYPE OF CONSTRUCTION OR THE ACQUISITION OF RIGHT OF WAY.

SHIRLEY CONTRACTING COMPANY, LLC
Dewberry

LIMITED ACCESS HIGHWAY By Resolution of Highway Commission dated October 4, 1956

REVISED	STATE	ROUTE	PROJECT	SHEET NO.
	VA.	64	0064-965-264, R-201, C-501, B-616, B-617	15

DESIGN FEATURES RELATING TO CONSTRUCTION OR TO REGULATION AND CONTROL OF TRAFFIC MAY BE SUBJECT TO CHANGE AS DEEMED NECESSARY BY THE DEPARTMENT

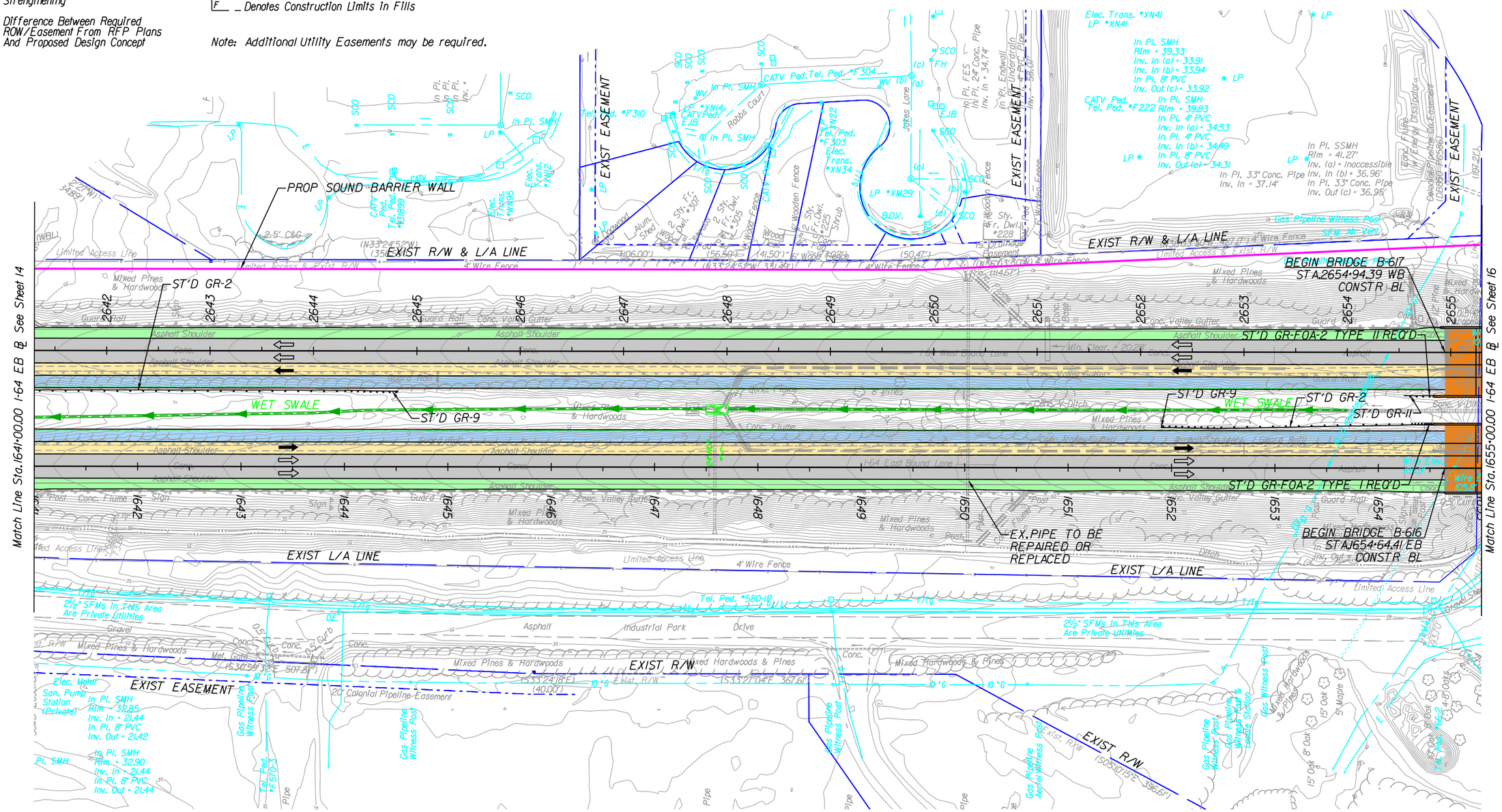

PROJECT	SHEET NO.
0064-965-264	15

PROJECT MANAGER Shirley Contracting Company, LLC
SURVEYED BY, DATE
DESIGN BY Dewberry
SUBSURFACE UTILITY BY, DATE

LIMITED ACCESS HIGHWAY By Resolution of Highway Commission dated October 4, 1956

REVISED	STATE	STATE ROUTE	STATE PROJECT	SHEET NO.
	VA.	64	0064-965-264, R-201, C-501, B-616, B-617	16

THESE PLANS ARE UNFINISHED AND UNAPPROVED AND ARE NOT TO BE USED FOR ANY TYPE OF CONSTRUCTION OR THE ACQUISITION OF RIGHT OF WAY.

SHIRLEY CONTRACTING COMPANY, LLC
Dewberry

DESIGN FEATURES RELATING TO CONSTRUCTION OR TO REGULATION AND CONTROL OF TRAFFIC MAY BE SUBJECT TO CHANGE AS DEEMED NECESSARY BY THE DEPARTMENT

LEGEND

- Denotes Prop. 12' Lane
- Denotes Existing Pavement (Typ. 2-12' Lanes + Shoulder)
- Denotes Prop. 12-14' Paved Shoulder
- Denotes Prop. Outside Shoulder Strengthening
- Difference Between Required ROW/Easement From RFP Plans And Proposed Design Concept
- Dot - Dot - Dashed Lines Denote Temporary Easements
- Dot - Dashed Lines Denote Permanent Easements
- Solid Lines Denote Right of Way
- C _ _ Denotes Construction Limits In Cuts
- F _ _ Denotes Construction Limits In Fills

Note: Additional Utility Easements may be required.

SCALE 0 50' 100'

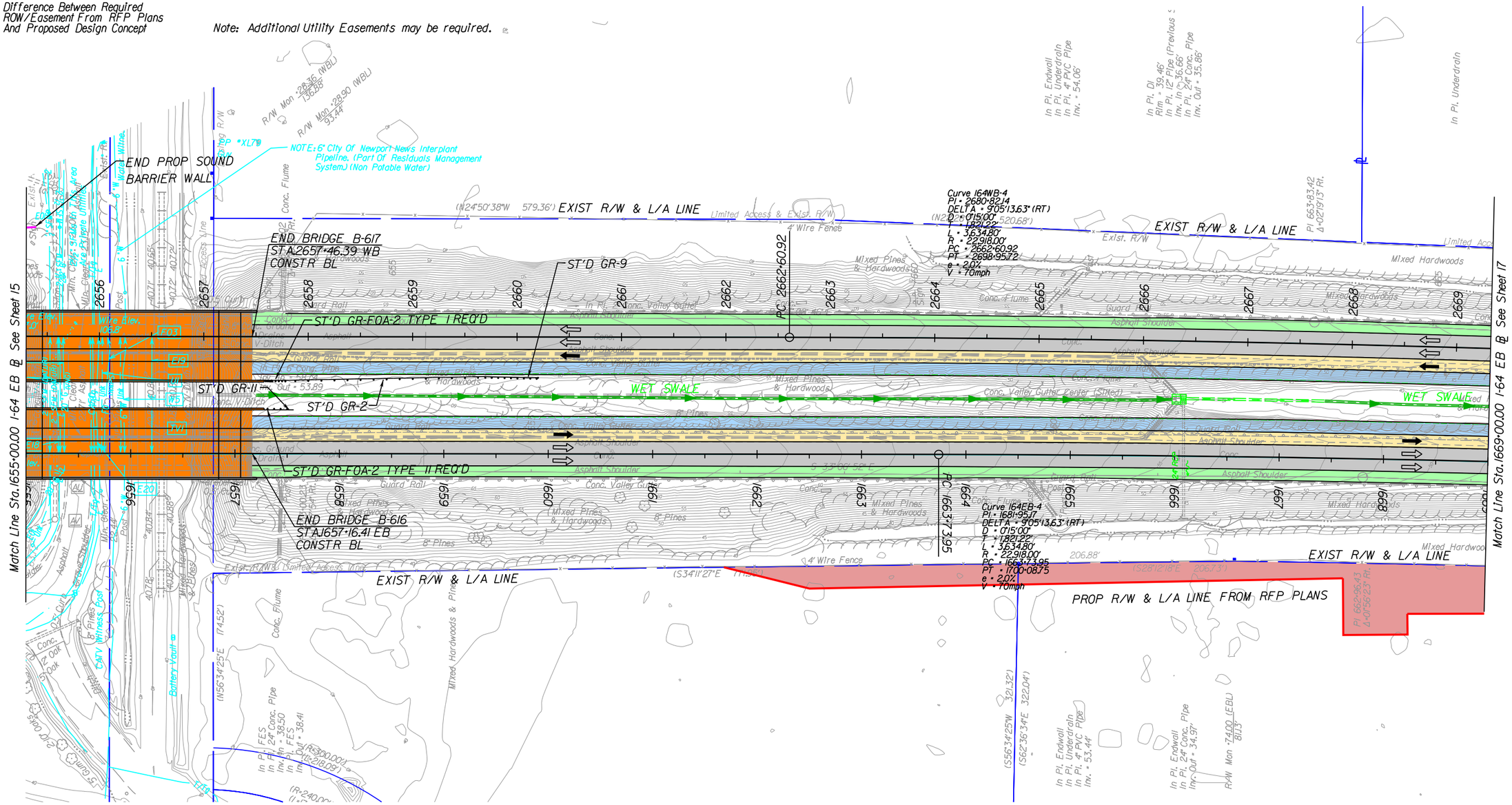

LIMITED ACCESS HIGHWAY By Resolution of Highway Commission dated October 4, 1956

REVISED	STATE	ROUTE	PROJECT	SHEET NO.
	VA.	64	0064-965-264, R-201, C-501	17

PROJECT MANAGER Shirley Contracting Company, LLC
SURVEYED BY, DATE
DESIGN BY Dewberry
SUBSURFACE UTILITY BY, DATE

LEGEND

Denotes Prop. 12' Lane

Denotes Existing Pavement (Typ. 2-12' Lanes + Shoulder)

Denotes Prop. 12-14' Paved Shoulder

Denotes Prop. Outside Shoulder Strengthening

Difference Between Required ROW/Easement From RFP Plans And Proposed Design Concept

Dot - Dot - Dashed Lines Denote Temporary Easements

Dot - Dashed Lines Denote Permanent Easements

Solid Lines Denote Right of Way

C Denotes Construction Limits in Cuts

F Denotes Construction Limits in Fills

Note: Additional Utility Easements may be required.

SCALE 0 50' 100'

THESE PLANS ARE UNFINISHED AND UNAPPROVED AND ARE NOT TO BE USED FOR ANY TYPE OF CONSTRUCTION OR THE ACQUISITION OF RIGHT OF WAY.

SHIRLEY CONTRACTING COMPANY, LLC
Dewberry

DESIGN FEATURES RELATING TO CONSTRUCTION OR TO REGULATION AND CONTROL OF TRAFFIC MAY BE SUBJECT TO CHANGE AS DEEMED NECESSARY BY THE DEPARTMENT

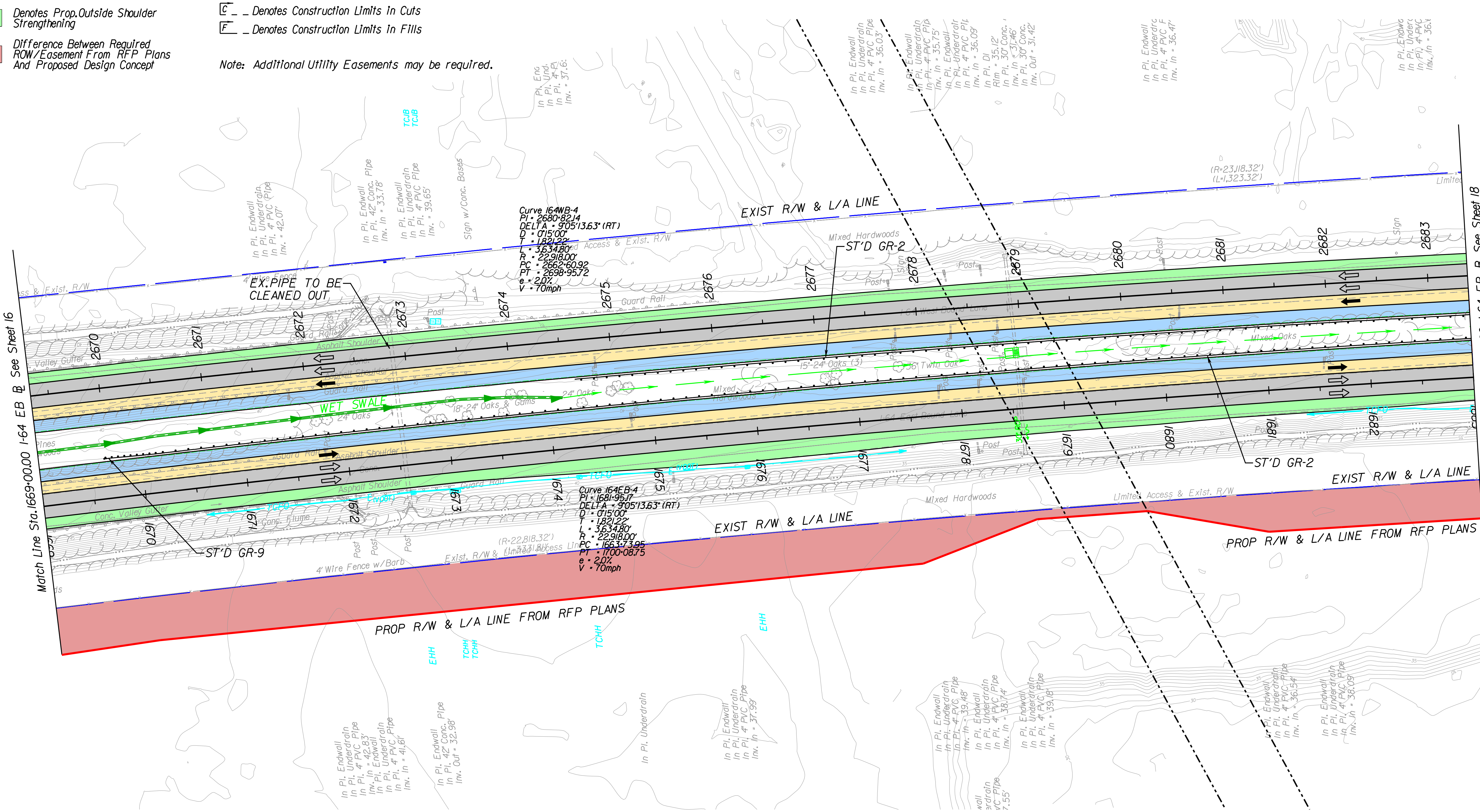

PROJECT	SHEET NO.
0064-965-264	17

LIMITED ACCESS HIGHWAY By Resolution of Highway Commission dated October 4, 1956

PROJECT MANAGER Shirley Contracting Company, LLC
SURVEYED BY, DATE
DESIGN BY Dewberry
SUBSURFACE UTILITY BY, DATE

LEGEND

- Denotes Prop. 12' Lane
- Denotes Existing Pavement (Typ. 2-12' Lanes + Shoulder)
- Denotes Prop. 12-14' Paved Shoulder
- Denotes Prop. Outside Shoulder Strengthening
- Difference Between Required ROW/Easement From RFP Plans And Proposed Design Concept
- Dot - Dot - Dashed Lines Denote Temporary Easements
- Dot - Dashed Lines Denote Permanent Easements
- Solid Lines Denote Right of Way
- C _ Denotes Construction Limits In Cuts
- F _ Denotes Construction Limits In Fills

Note: Additional Utility Easements may be required.

SCALE 0 50' 100'

THESE PLANS ARE UNFINISHED AND UNAPPROVED AND ARE NOT TO BE USED FOR ANY TYPE OF CONSTRUCTION OR THE ACQUISITION OF RIGHT OF WAY.

SHIRLEY CONTRACTING COMPANY, LLC
Dewberry

DESIGN FEATURES RELATING TO CONSTRUCTION OR TO REGULATION AND CONTROL OF TRAFFIC MAY BE SUBJECT TO CHANGE AS DEEMED NECESSARY BY THE DEPARTMENT

REVISED	STATE	ROUTE	PROJECT	SHEET NO.
	VA.	64	0064-965-264, R-201, C-501	18

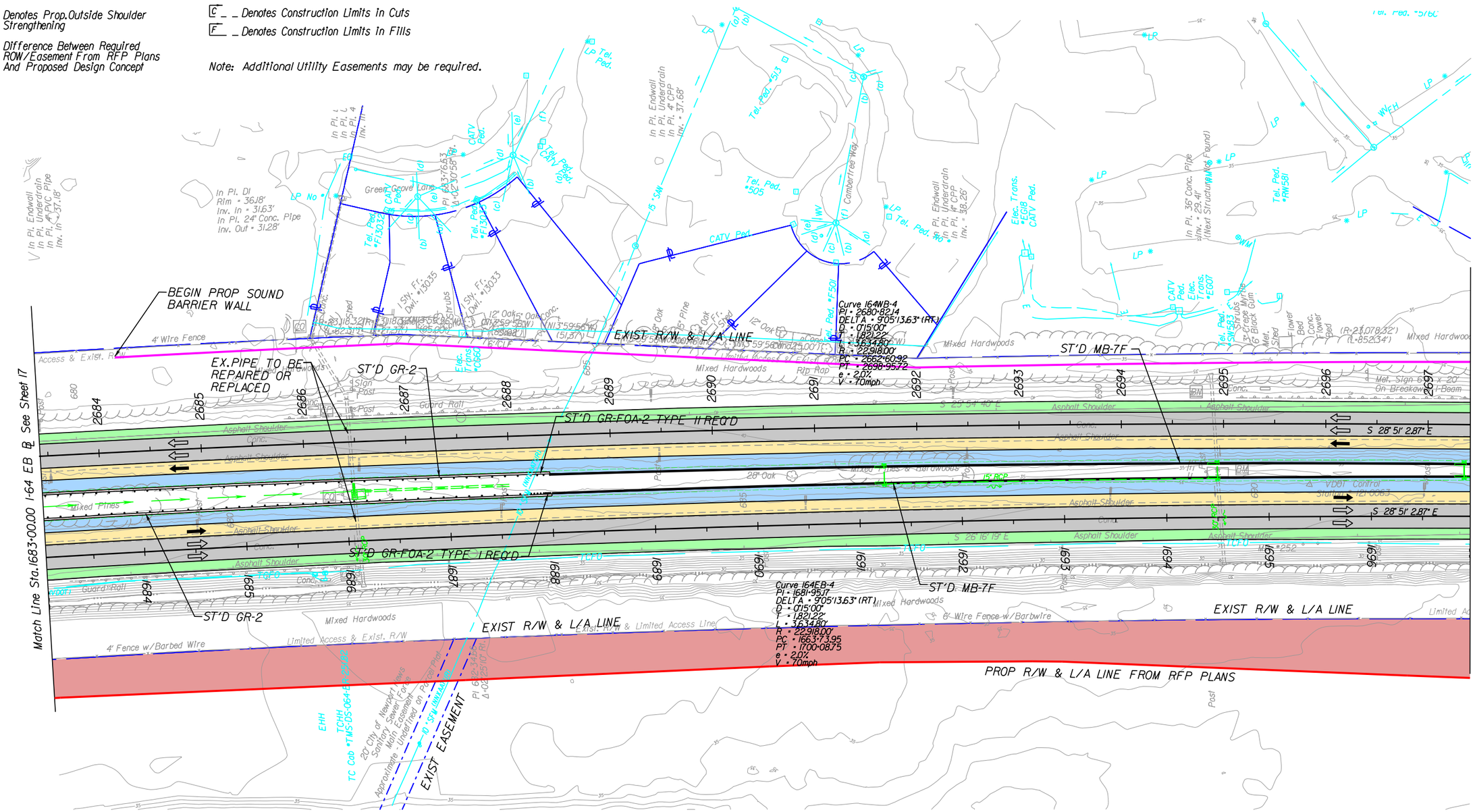

PROJECT	SHEET NO.
0064-965-264	18

LIMITED ACCESS HIGHWAY By Resolution of Highway Commission dated October 4, 1956

PROJECT MANAGER Shirley Contracting Company, LLC
SURVEYED BY, DATE
DESIGN BY Dewberry
SUBSURFACE UTILITY BY, DATE

LEGEND

- Denotes Prop. 12' Lane
- Denotes Existing Pavement (Typ. 2-12' Lanes + Shoulder)
- Denotes Prop. 12-14' Paved Shoulder
- Denotes Prop. Outside Shoulder Strengthening
- Difference Between Required ROW/Easement From RFP Plans And Proposed Design Concept
- Dot - Dot - Dashed Lines Denote Temporary Easements
- Dot - Dashed Lines Denote Permanent Easements
- Solid Lines Denote Right of Way
- C Denotes Construction Limits In Cuts
- F Denotes Construction Limits In Fills

Note: Additional Utility Easements may be required.

THESE PLANS ARE UNFINISHED AND UNAPPROVED AND ARE NOT TO BE USED FOR ANY TYPE OF CONSTRUCTION OR THE ACQUISITION OF RIGHT OF WAY.

SHIRLEY CONTRACTING COMPANY, LLC
Dewberry

DESIGN FEATURES RELATING TO CONSTRUCTION OR TO REGULATION AND CONTROL OF TRAFFIC MAY BE SUBJECT TO CHANGE AS DEEMED NECESSARY BY THE DEPARTMENT

REVISED	STATE	ROUTE	PROJECT	SHEET NO.
	VA.	64	0064-965-264, R-201, C-501	19

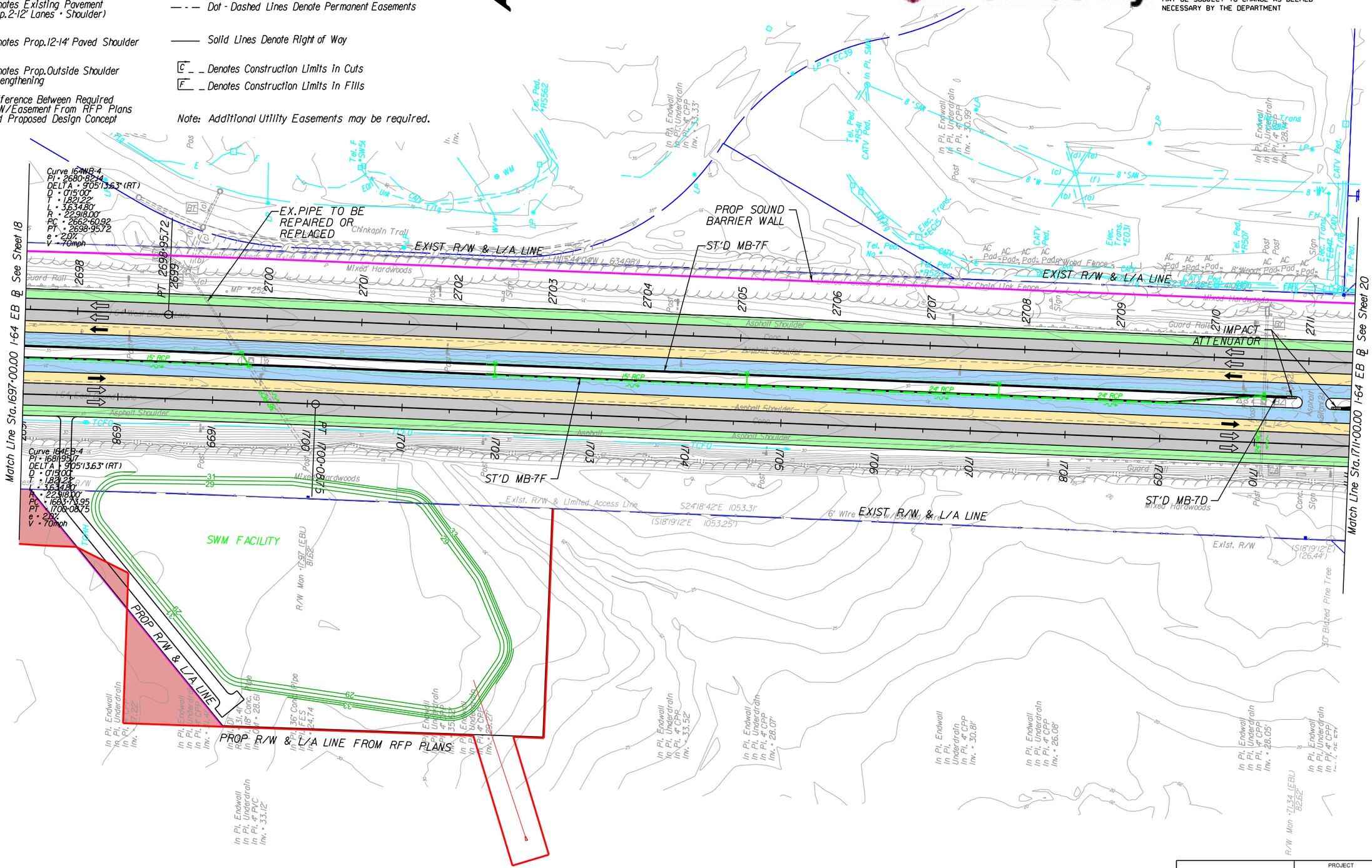

PROJECT	SHEET NO.
0064-965-264	19

PROJECT MANAGER Shirley Contracting Company, LLC
SURVEYED BY, DATE
DESIGN BY Dewberry
SUBSURFACE UTILITY BY, DATE

LIMITED ACCESS HIGHWAY By Resolution of Highway Commission dated October 4, 1956

REVISED	STATE	STATE ROUTE	STATE PROJECT	SHEET NO.
	VA.	64	0064-965-264, R-201, C-501	20

THESE PLANS ARE UNFINISHED AND UNAPPROVED AND ARE NOT TO BE USED FOR ANY TYPE OF CONSTRUCTION OR THE ACQUISITION OF RIGHT OF WAY.

SHIRLEY CONTRACTING COMPANY, LLC
Dewberry

DESIGN FEATURES RELATING TO CONSTRUCTION OR TO REGULATION AND CONTROL OF TRAFFIC MAY BE SUBJECT TO CHANGE AS DEEMED NECESSARY BY THE DEPARTMENT

LEGEND

- Denotes Prop.12' Lane
- Denotes Existing Pavement (Typ.2-12' Lanes + Shoulder)
- Denotes Prop.12-14' Paved Shoulder
- Denotes Prop.Outside Shoulder Strengthening
- Difference Between Required ROW/Easement From RFP Plans And Proposed Design Concept
- Dot - Dot - Dashed Lines Denote Temporary Easements
- Dot - Dashed Lines Denote Permanent Easements
- Solid Lines Denote Right of Way
- C _ _ Denotes Construction Limits In Cuts
- F _ _ Denotes Construction Limits In Fills

Note: Additional Utility Easements may be required.

SCALE 0 50' 100'

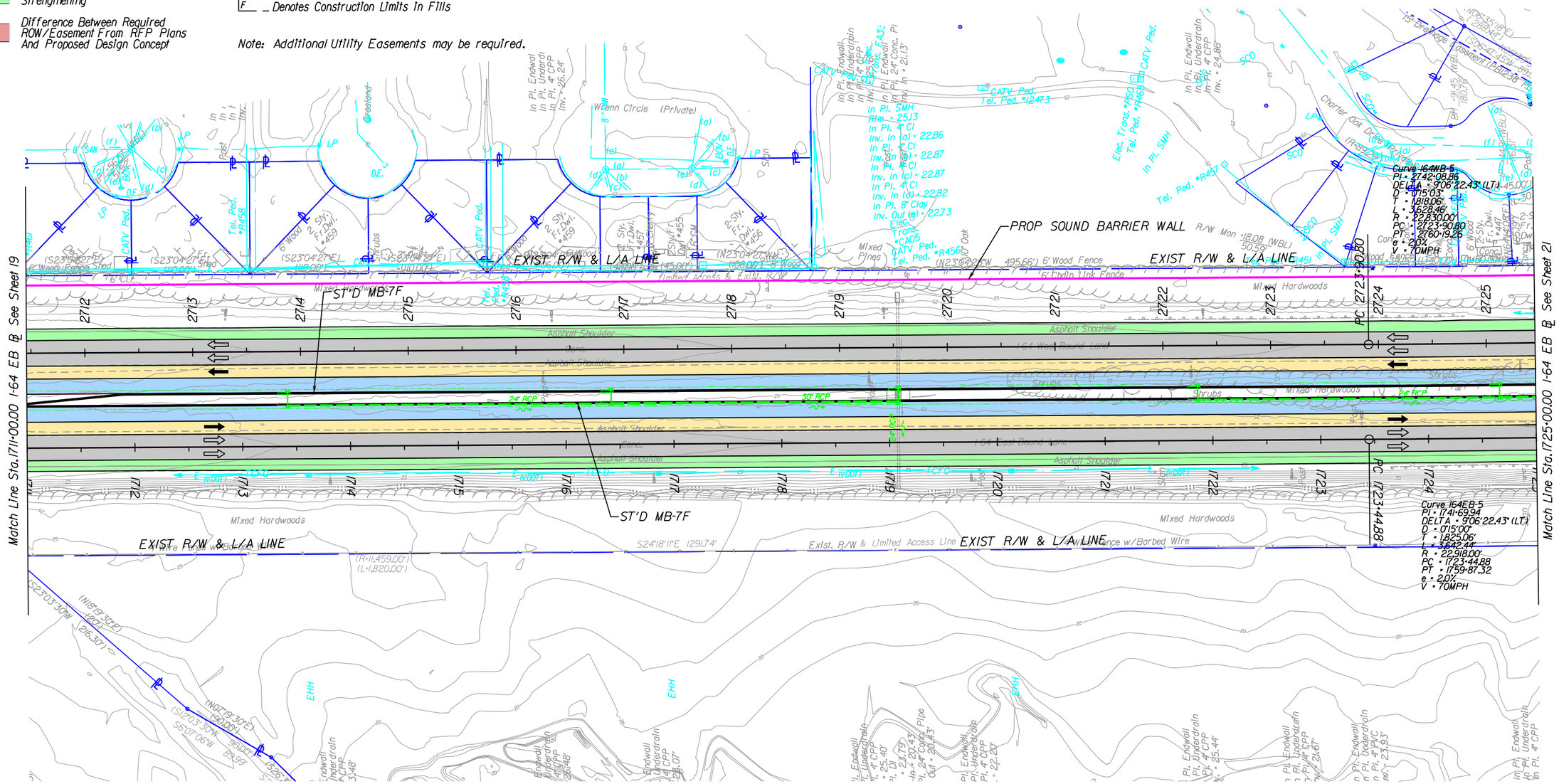

PROJECT	SHEET NO.
0064-965-264	20

LIMITED ACCESS HIGHWAY By Resolution of Highway Commission dated October 4, 1956

PROJECT MANAGER Shirley Contracting Company, LLC
SURVEYED BY, DATE
DESIGN BY Dewberry
SUBSURFACE UTILITY BY, DATE

LEGEND

- Denotes Prop. 12' Lane
- Denotes Existing Pavement (Typ. 2-12' Lanes + Shoulder)
- Denotes Prop. 12-14' Paved Shoulder
- Denotes Prop. Outside Shoulder Strengthening
- Difference Between Required ROW/Easement From RFP Plans And Proposed Design Concept
- Dot - Dot - Dashed Lines Denote Temporary Easements
- Dot - Dashed Lines Denote Permanent Easements
- Solid Lines Denote Right of Way
- C _ _ Denotes Construction Limits In Cuts
- F _ _ Denotes Construction Limits In Fills

Note: Additional Utility Easements may be required.

SCALE 0 50' 100'

THESE PLANS ARE UNFINISHED AND UNAPPROVED AND ARE NOT TO BE USED FOR ANY TYPE OF CONSTRUCTION OR THE ACQUISITION OF RIGHT OF WAY.

SHIRLEY CONTRACTING COMPANY, LLC
Dewberry

DESIGN FEATURES RELATING TO CONSTRUCTION OR TO REGULATION AND CONTROL OF TRAFFIC MAY BE SUBJECT TO CHANGE AS DEEMED NECESSARY BY THE DEPARTMENT

REVISED	STATE	STATE ROUTE	STATE PROJECT	SHEET NO.
	VA.	64	0064-965-264, R-201, C-501	21

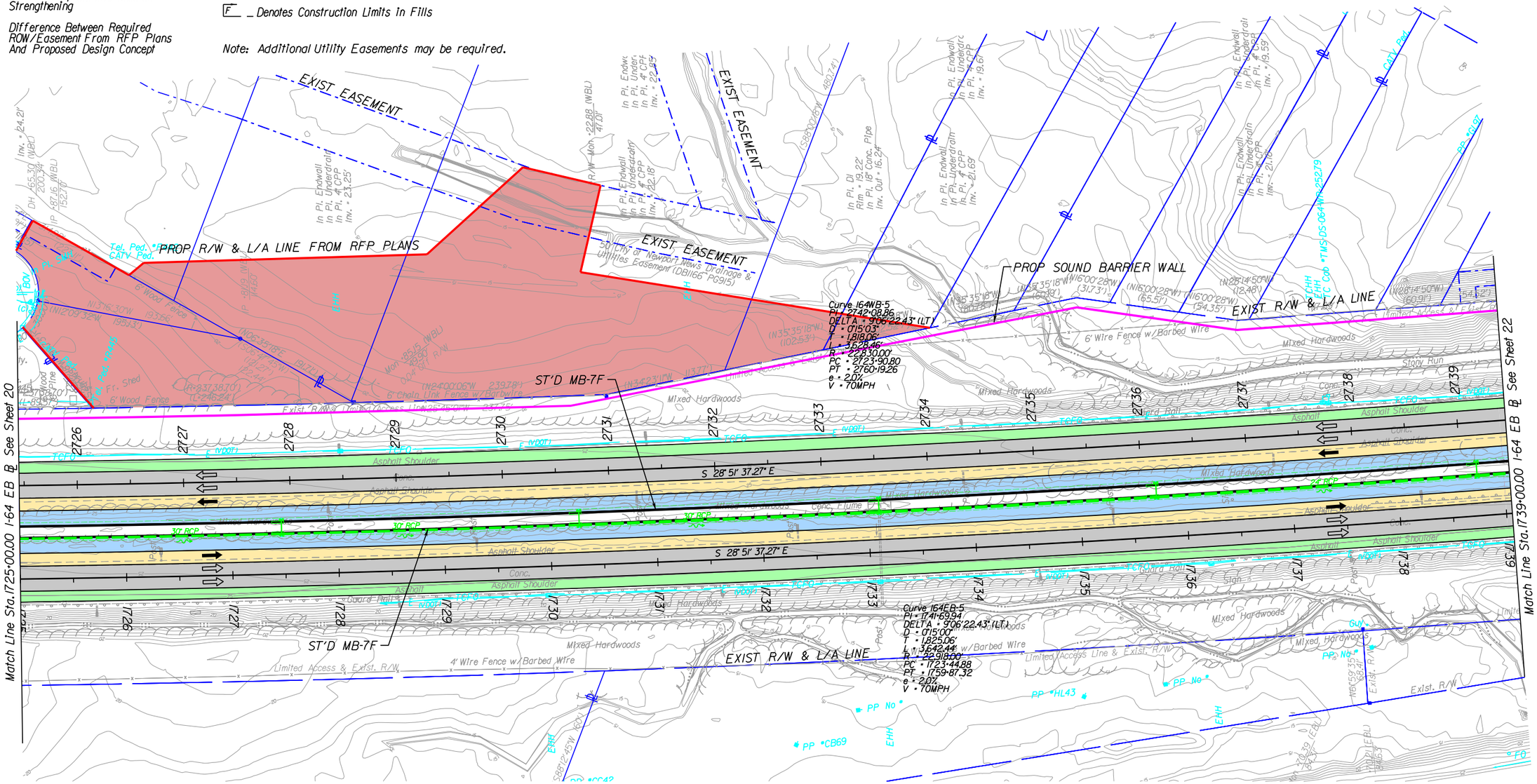

LIMITED ACCESS HIGHWAY By Resolution of Highway Commission dated October 4, 1956

PROJECT MANAGER Shirley Contracting Company, LLC
SURVEYED BY, DATE
DESIGN BY Dewberry
SUBSURFACE UTILITY BY, DATE

LEGEND

- Denotes Prop.12' Lane
- Denotes Existing Pavement (Typ.2-12' Lanes + Shoulder)
- Denotes Prop.12-14' Paved Shoulder
- Denotes Prop.Outside Shoulder Strengthening
- Difference Between Required ROW/Easement From RFP Plans And Proposed Design Concept
- Dot - Dot - Dashed Lines Denote Temporary Easements
- Dot - Dashed Lines Denote Permanent Easements
- Solid Lines Denote Right of Way
- C _ _ Denotes Construction Limits In Cuts
- F _ _ Denotes Construction Limits In Fills

Note: Additional Utility Easements may be required.

SCALE 0 50' 100'

THESE PLANS ARE UNFINISHED AND UNAPPROVED AND ARE NOT TO BE USED FOR ANY TYPE OF CONSTRUCTION OR THE ACQUISITION OF RIGHT OF WAY.

SHIRLEY CONTRACTING COMPANY, LLC
Dewberry

DESIGN FEATURES RELATING TO CONSTRUCTION OR TO REGULATION AND CONTROL OF TRAFFIC MAY BE SUBJECT TO CHANGE AS DEEMED NECESSARY BY THE DEPARTMENT

REVISED	STATE	STATE ROUTE	STATE PROJECT	SHEET NO.
	VA.	64	0064-965-264, R-201, C-501	22

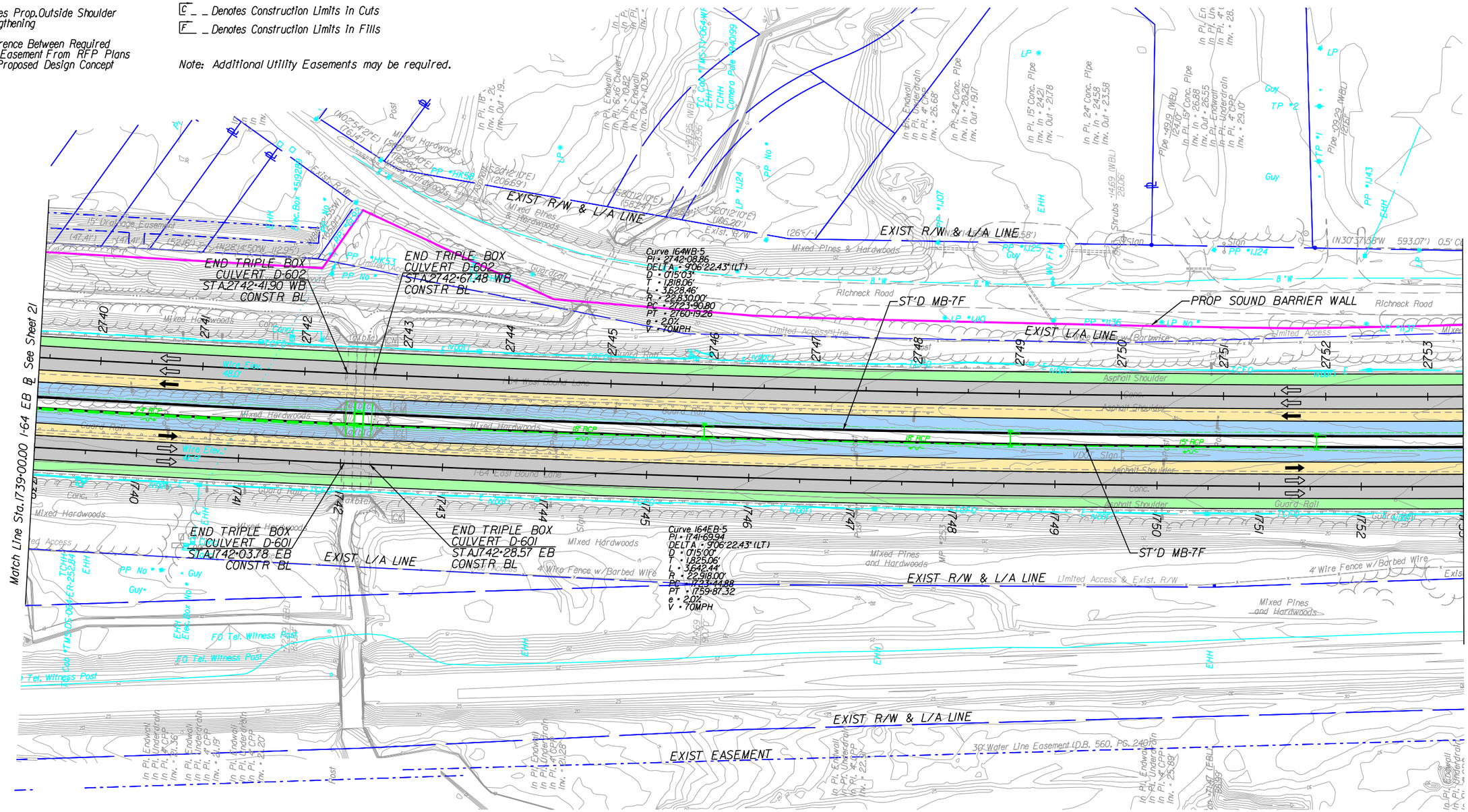

PROJECT	SHEET NO.
0064-965-264	22

PROJECT MANAGER Shirley Contracting Company, LLC
SURVEYED BY, DATE
DESIGN BY Dewberry
SUBSURFACE UTILITY BY, DATE

LIMITED ACCESS HIGHWAY By Resolution of Highway Commission dated October 4, 1956

REVISED	STATE	ROUTE	PROJECT	SHEET NO.
	VA.	64	0064-965-264, R-201, C-501	23

THESE PLANS ARE UNFINISHED AND UNAPPROVED AND ARE NOT TO BE USED FOR ANY TYPE OF CONSTRUCTION OR THE ACQUISITION OF RIGHT OF WAY.

SHIRLEY CONTRACTING COMPANY, LLC
Dewberry

DESIGN FEATURES RELATING TO CONSTRUCTION OR TO REGULATION AND CONTROL OF TRAFFIC MAY BE SUBJECT TO CHANGE AS DEEMED NECESSARY BY THE DEPARTMENT

LEGEND

- Denotes Prop.12' Lane
- Denotes Existing Pavement (Typ.2-12' Lanes + Shoulder)
- Denotes Prop.12-14' Paved Shoulder
- Denotes Prop.Outside Shoulder Strengthening
- Difference Between Required ROW/Easement From RFP Plans And Proposed Design Concept
- Dot - Dot - Dashed Lines Denote Temporary Easements
- Dot - Dashed Lines Denote Permanent Easements
- Solid Lines Denote Right of Way
- C _ _ Denotes Construction Limits In Cuts
- F _ _ Denotes Construction Limits In Fills

Note: Additional Utility Easements may be required.

SCALE 0 50' 100'

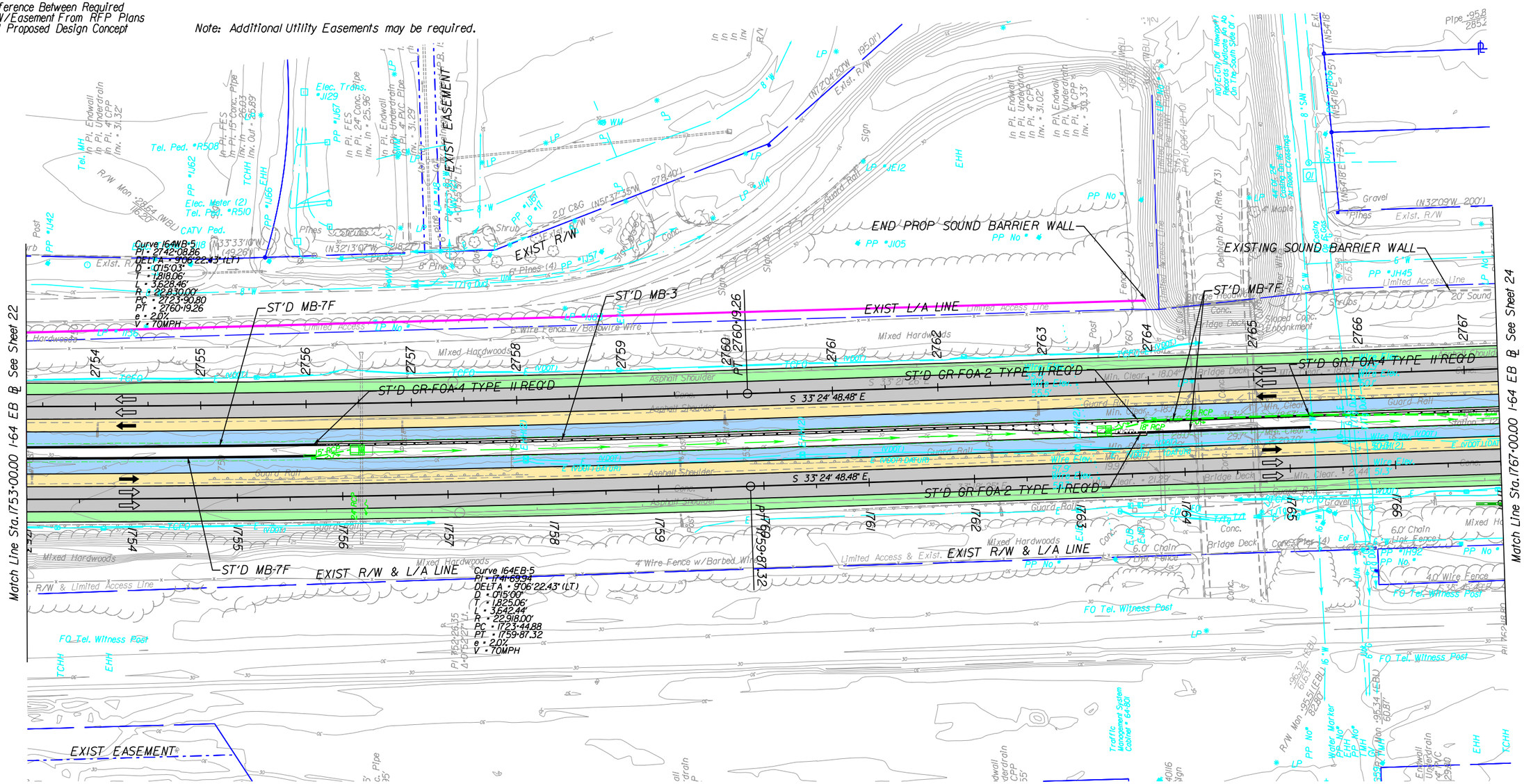

PROJECT	SHEET NO.
0064-965-264	23

LIMITED ACCESS HIGHWAY By Resolution of Highway Commission dated October 4, 1956

PROJECT MANAGER Shirley Contracting Company, LLC
SURVEYED BY, DATE
DESIGN BY Dewberry
SUBSURFACE UTILITY BY, DATE

LEGEND

- Denotes Prop.12' Lane
- Denotes Existing Pavement (Typ.2-12' Lanes + Shoulder)
- Denotes Prop.12-14' Paved Shoulder
- Denotes Prop.Outside Shoulder Strengthening
- Difference Between Required ROW/Easement From RFP Plans And Proposed Design Concept
- Dot - Dot - Dashed Lines Denote Temporary Easements
- Dot - Dashed Lines Denote Permanent Easements
- Solid Lines Denote Right of Way
- C Denotes Construction Limits In Cuts
- F Denotes Construction Limits In Fills

Note: Additional Utility Easements may be required.

THESE PLANS ARE UNFINISHED AND UNAPPROVED AND ARE NOT TO BE USED FOR ANY TYPE OF CONSTRUCTION OR THE ACQUISITION OF RIGHT OF WAY.

SCALE 0 50' 100'

SHIRLEY CONTRACTING COMPANY, LLC

Dewberry

DESIGN FEATURES RELATING TO CONSTRUCTION OR TO REGULATION AND CONTROL OF TRAFFIC MAY BE SUBJECT TO CHANGE AS DEEMED NECESSARY BY THE DEPARTMENT

REVISED	STATE	ROUTE	PROJECT	SHEET NO.
	VA.	64	0064-965-264, R-201, C-501	24

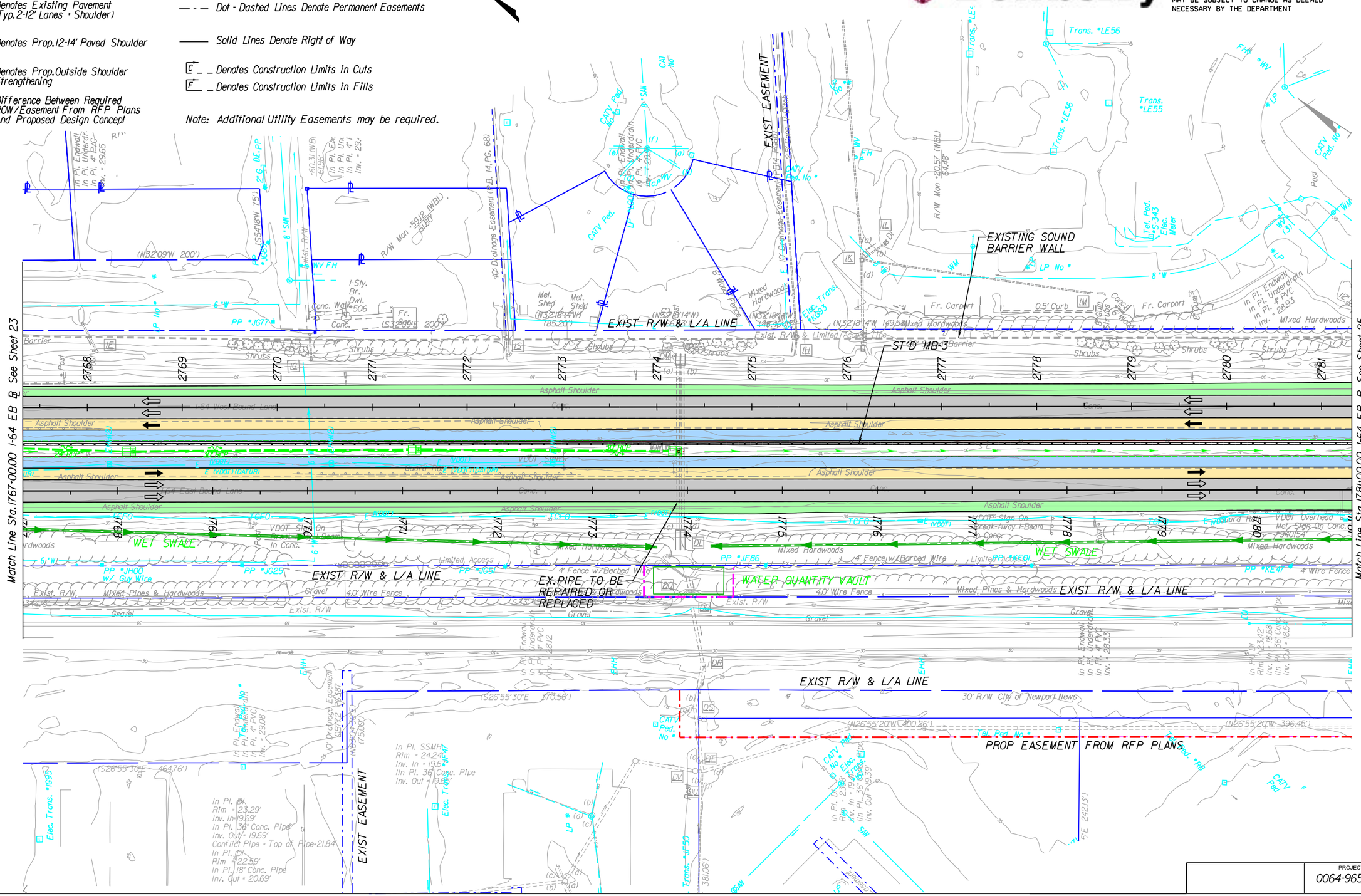

PROJECT	SHEET NO.
0064-965-264	24

LIMITED ACCESS HIGHWAY By Resolution of Highway Commission dated October 4, 1956

PROJECT MANAGER Shirley Contracting Company, LLC
SURVEYED BY, DATE
DESIGN BY Dewberry
SUBSURFACE UTILITY BY, DATE

LEGEND

- Denotes Prop. 12' Lane
- Denotes Existing Pavement (Typ. 2-12' Lanes + Shoulder)
- Denotes Prop. 12-14' Paved Shoulder
- Denotes Prop. Outside Shoulder Strengthening
- Difference Between Required ROW/Easement From RFP Plans And Proposed Design Concept
- Dot - Dot - Dashed Lines Denote Temporary Easements
- Dot - Dashed Lines Denote Permanent Easements
- Solid Lines Denote Right of Way
- C Denotes Construction Limits In Cuts
- F Denotes Construction Limits In Fills

Note: Additional Utility Easements may be required.

SCALE 0 50' 100'

THESE PLANS ARE UNFINISHED AND UNAPPROVED AND ARE NOT TO BE USED FOR ANY TYPE OF CONSTRUCTION OR THE ACQUISITION OF RIGHT OF WAY.

SHIRLEY CONTRACTING COMPANY, LLC

Dewberry

DESIGN FEATURES RELATING TO CONSTRUCTION OR TO REGULATION AND CONTROL OF TRAFFIC MAY BE SUBJECT TO CHANGE AS DEEMED NECESSARY BY THE DEPARTMENT

REVISED	STATE	ROUTE	PROJECT	SHEET NO.
	VA.	64	0064-965-264, R-201, C-501	25

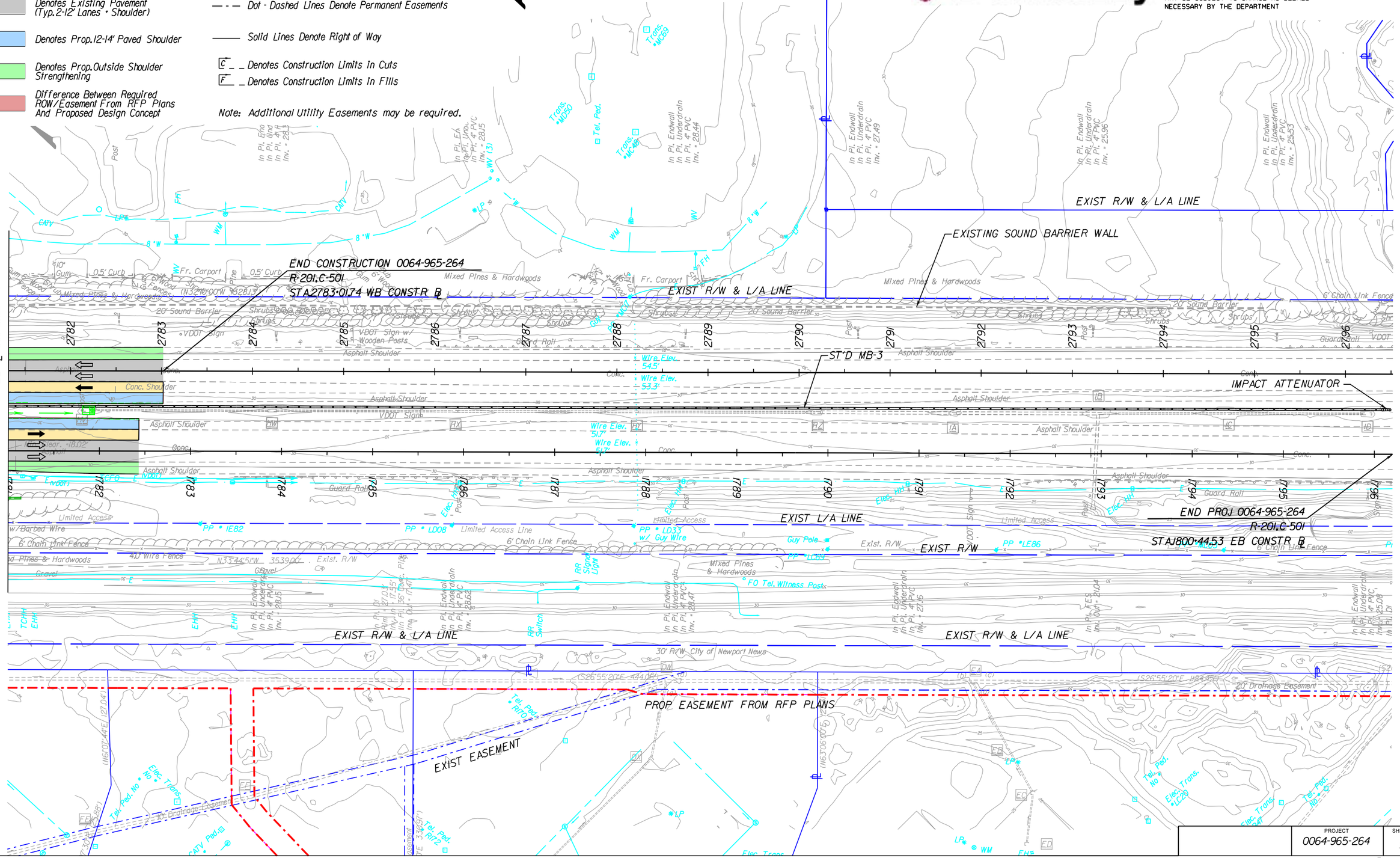

PROJECT	SHEET NO.
0064-965-264	25

STATE	FEDERAL AID ROUTE	FEDERAL AID PROJECT	STATE ROUTE	STATE PROJECT	SHEET NO.
VA.	—	NHA-064-3(479)	64	0064-965-264, B616, B617	26
NBIS Number: 000000000020706 000000000020708			UPC No. 104905		
Federal Oversight Code: FO			FHWA Construction and Scour Code: X531-SN		

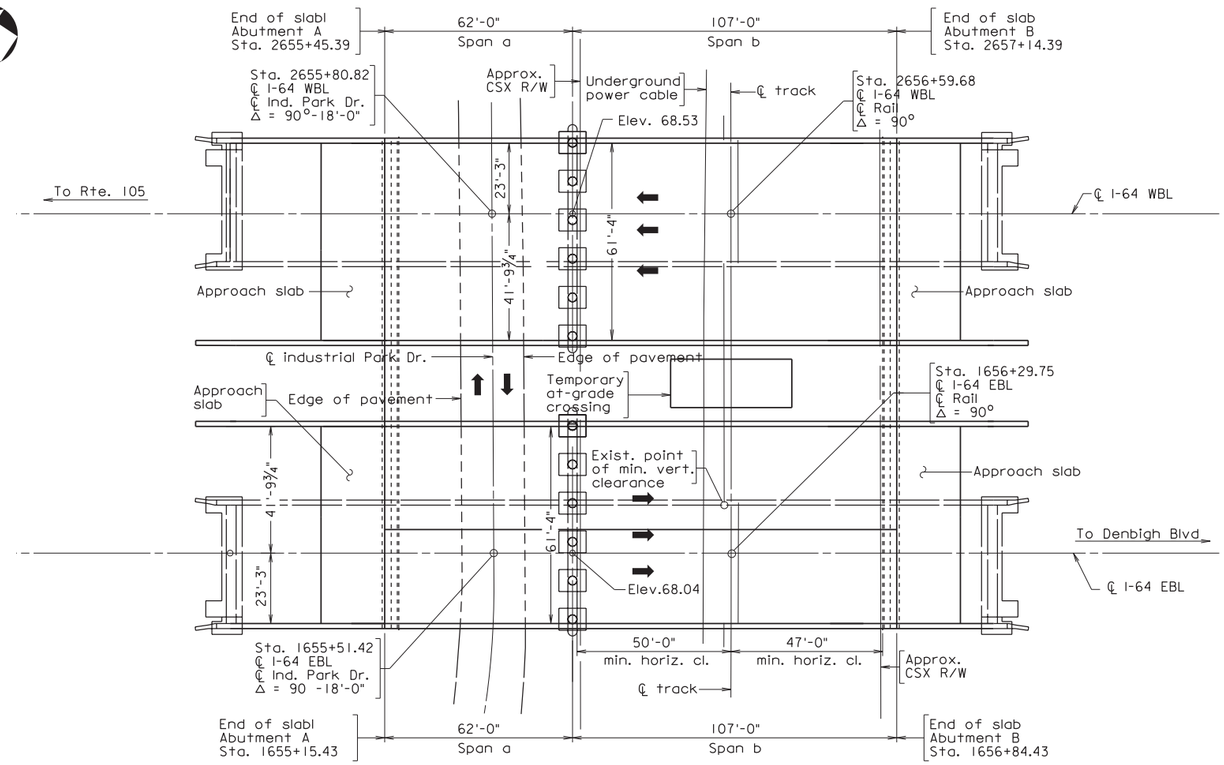

PLAN

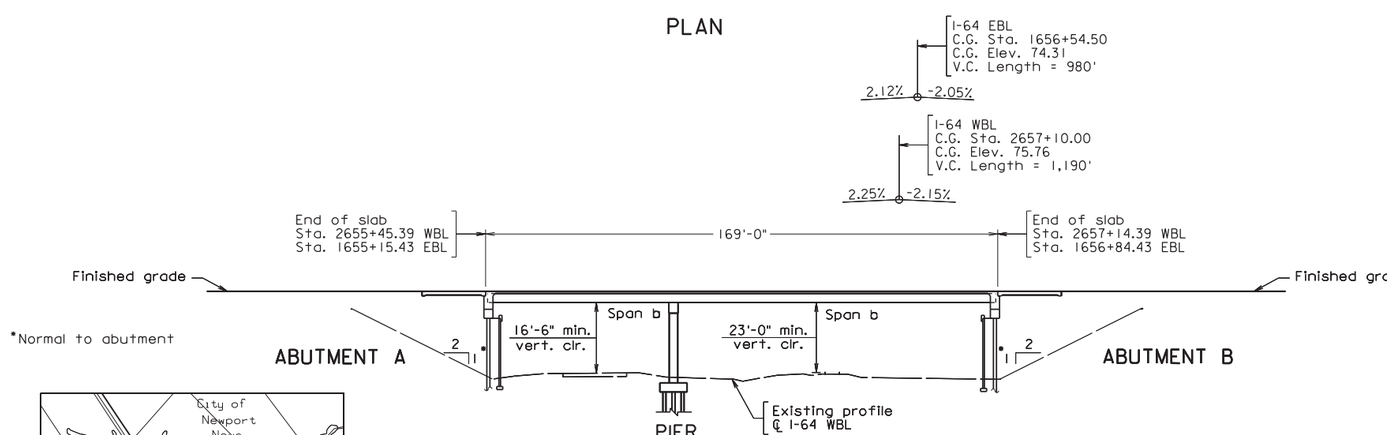

DEVELOPED SECTION ALONG WIDENING

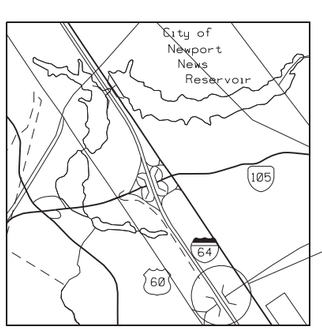

Project Location

LOCATION MAP
Not to scale

PRELIMINARY PLANS

THESE PLANS NOT TO BE USED FOR CONSTRUCTION

Scale: 1" = 25'

DESIGN EXCEPTION(S):

None

GENERAL NOTES:

Width: 61'-4" face-to-face of rails.

Span layout: 55'-0" - 58'-0" - 81'-0" - 58'-0"

Capacity: HL-93 loading.

Specifications:

Construction: Virginia Department of Transportation Road and Bridge Specifications, 2007.

Design: AASHTO LRFD Bridge Design Specifications, 6th Edition, 2012; and VDOT Modifications.

Standards: Virginia Department of Transportation Road and Bridge Standards, 2008.

These plans are incomplete unless accompanied by the Supplemental Specifications and Special Provisions included in the contract documents.

Low permeability concrete shall be used in this project.

Corrosion resistant reinforcing steel will be utilized in accordance with IIM-S&B-81

Bridge Nos. of existing bridges are 2210 (EBL) and 2211 (WBL). Plan Nos. are 166-23 and 166-23A.

The existing structure is designated a Type B structure in accordance with Sec. 411.

SHIRLEY CONTRACTING COMPANY, LLC

Dewberry

VDOT

COMMONWEALTH OF VIRGINIA

DEPARTMENT OF TRANSPORTATION

PROPOSED BRIDGE WIDENING ON
RTE. 64 OVER INDUSTRIAL PARK DRIVE AND CSX
CITY OF NEWPORT NEWS
PROJ. 0064-965-264

PLANS BY:	Consultant
COORDINATED:	
SUPERVISED:	
DESIGNED:	Soroush Yazdi
DRAWN:	Soroush Yazdi
CHECKED:	James Davidson

No.	Description	Date

REVISIONS

For Table of Revisions, see Sheet 2.

Recommended for Approval: _____ (Developer's Designee) Date

Approved: _____ Chief Engineer Date

Date: _____

© 2014, Commonwealth of Virginia

166-23B

Sheet 26 of

$DATE$ $TIME$
GPE_64 over Ind Pk Dr and CSX.dgn

STATE	FEDERAL AID ROUTE	FEDERAL AID PROJECT	STATE ROUTE	STATE PROJECT	SHEET NO.
VA.	—	NHA-064-3(479)		, B616, B617	27

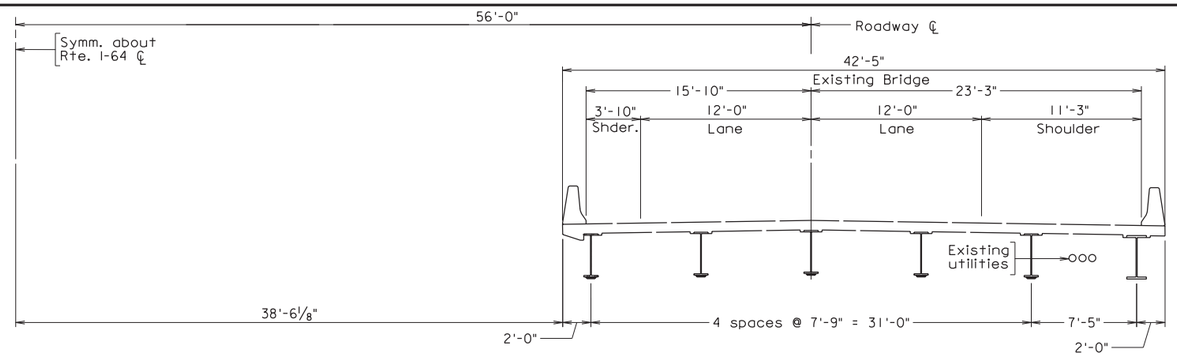

EXISTING BRIDGE - TRANSVERSE SECTION

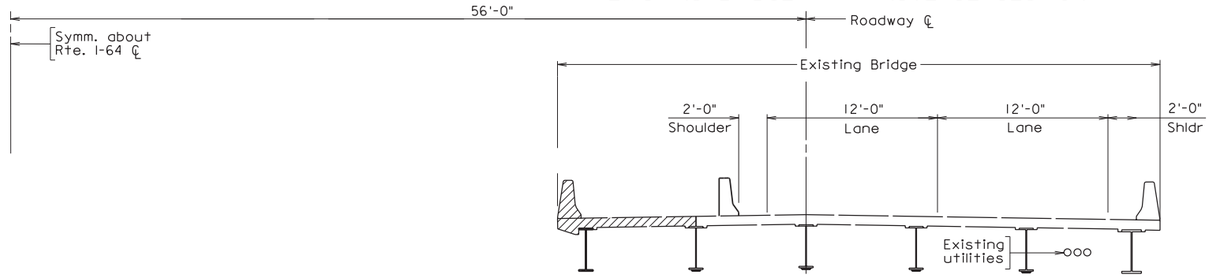

DEMOLITION - TRANSVERSE SECTION

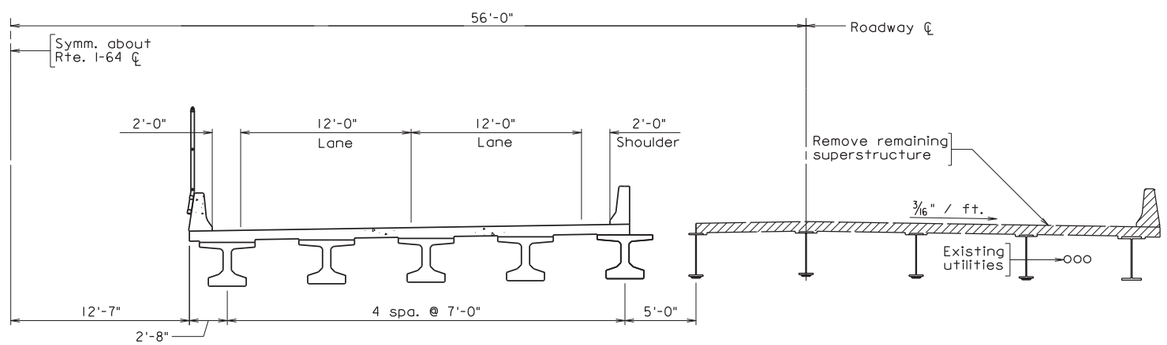

DEMOLITION AND CONSTRUCTION - TRANSVERSE SECTION

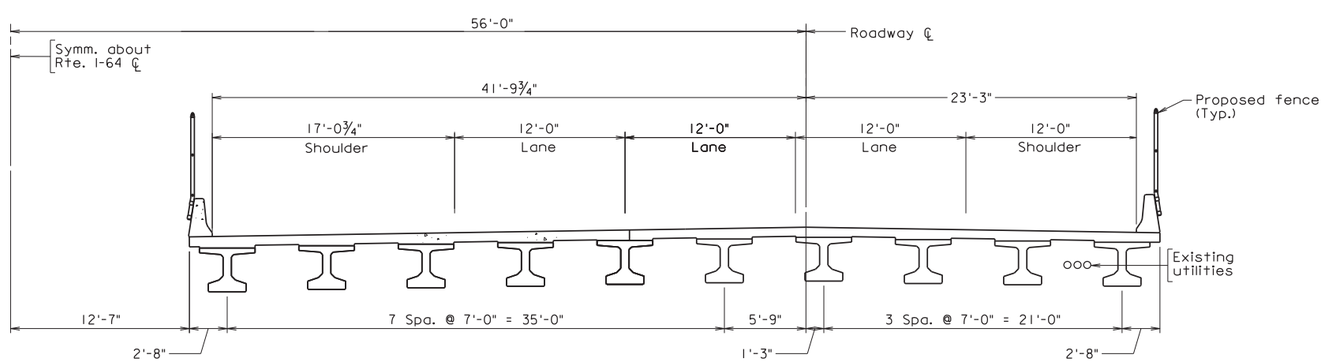

FINAL - TRANSVERSE SECTION

Scale: ¼" = 1'-0", unless otherwise shown

© 2014, Commonwealth of Virginia

Notes:

All sections shown looking station-ahead (to the east).

A potential Sequence of Construction for each bridge is provided below.

Stage 1: Install temporary traffic controls and shift traffic towards the outside of the existing bridge, maintaining two 12'-0" lanes. Remove portion of existing bridge.

Stage 2: Construct proposed bridge widening. Longitudinal deck joint shall be located over beam/girder line.

Stage 3: Shift traffic to the previously constructed widening, providing two 12'-0" lanes. Construct remaining portion of bridge replacement.

Stage 4: Remove temporary barrier and shift traffic to final alignment.

Legend:

Existing structure to be removed.

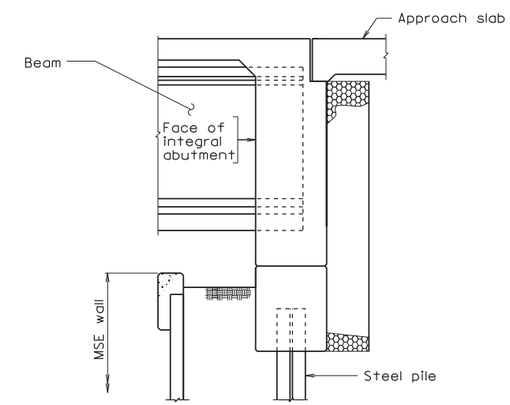

ABUTMENT SECTION

SHIRLEY CONTRACTING COMPANY, LLC

Dewberry

PRELIMINARY PLANS

THESE PLANS NOT TO BE USED FOR CONSTRUCTION

No.	Description	Date
	Revisions	

COMMONWEALTH OF VIRGINIA
DEPARTMENT OF TRANSPORTATION

STRUCTURE AND BRIDGE DIVISION

TRANSVERSE SECTION
(I-64 OVER INDUSTRIAL PARK DR.)

Designed: SFY
Drawn: SFY
Checked: JDD

Date

Plan No. 166-23B

Sheet No. 27 of

Typ Section_64 over Ind Pk Dr and CSX.dgn

STATE	FEDERAL AID ROUTE	FEDERAL AID PROJECT	STATE ROUTE	STATE PROJECT	SHEET NO.
VA.	—	NHA-064-3(479)	64	0064-965-264, B618, B619	28
NBIS Number: 00000000002071 0 00000000002071 2			UPC No. 104905		
Federal Oversight Code: FO			FHWA Construction and Scour Code: X231-SN		

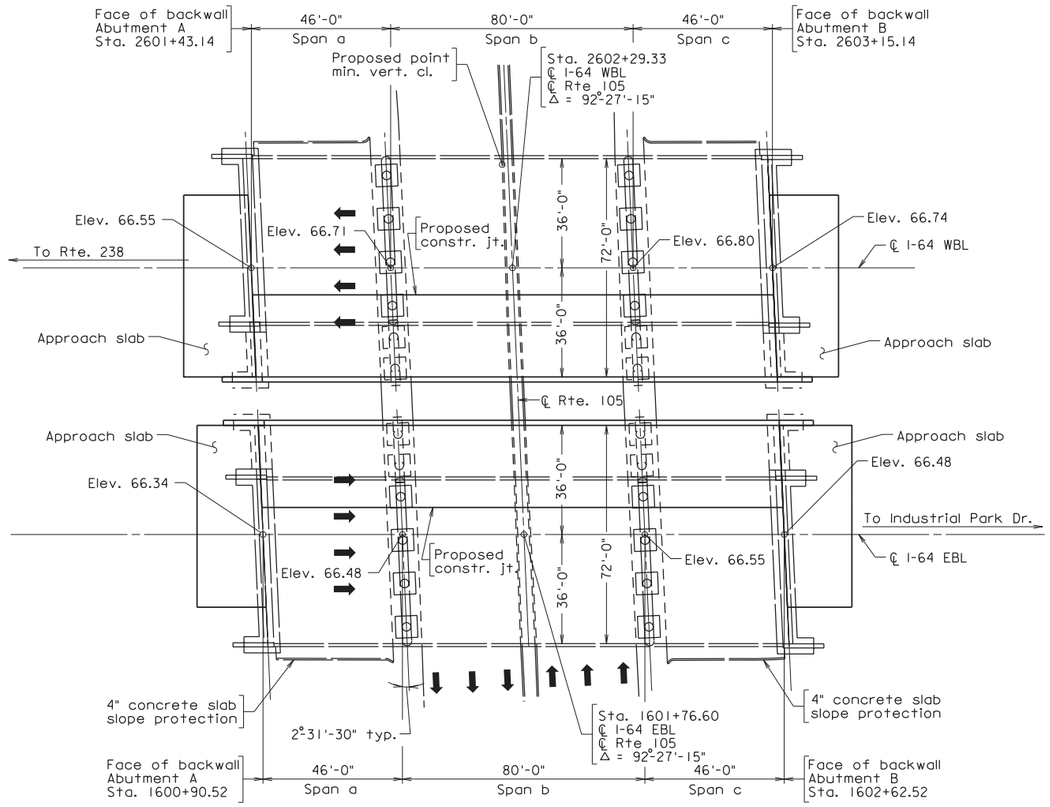

PLAN

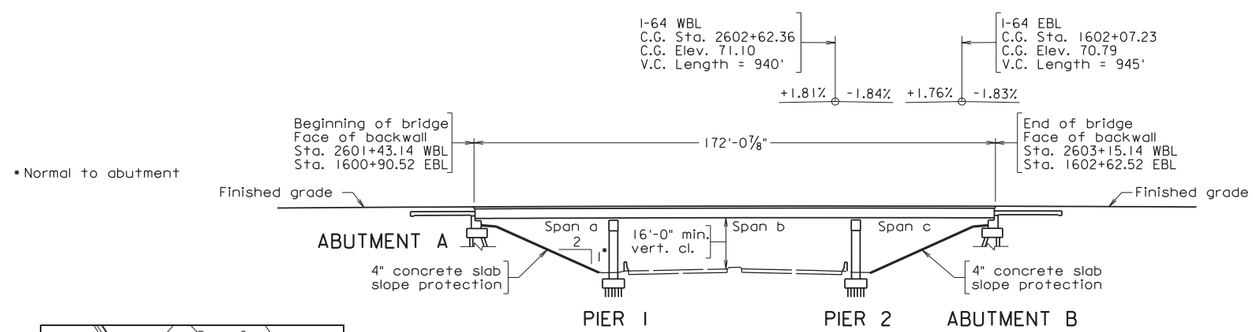

DEVELOPED SECTION ALONG WIDENING

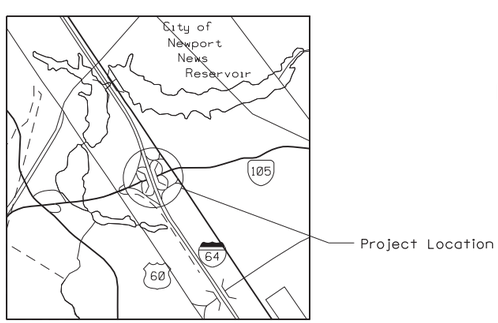

LOCATION MAP
Not to scale

Bridge repair notes:

1. All superstructure and substructure repairs will be performed on the existing bridges in accordance with RFP requirements.
2. Joints at piers will be retrofitted in accordance with Structure and Bridge Manual Volume V, Part 2, File No. 10.02-2.
3. Bearings of existing girders will be replaced

Scale: 1" = 25'

DESIGN EXCEPTION(S):

16'-0" vertical clearance over Route 105. Design Exception approved by State Structure and Bridge Engineer on June 2, 2014.

GENERAL NOTES:

Width: 72'-0" face-to-face of rails.

Span layout: 46'-0" - 80'-0" - 46'-0"

Capacity: HL-93 loading.

Specifications:

Construction: Virginia Department of Transportation Road and Bridge Specifications, 2007.

Design: AASHTO LRFD Bridge Design Specifications, 6th Edition, 2012; and VDOT Modifications.

Standards: Virginia Department of Transportation Road and Bridge Standards, 2008.

These plans are incomplete unless accompanied by the Supplemental Specifications and Special Provisions included in the contract documents.

Low permeability concrete shall be used in this project.

Corrosion resistant reinforcing steel will be utilized in accordance with IIM-S&B-81

Bridge Nos. of existing bridges are 2212 (EBL) and 2213 (WBL). Plan Nos. are 166-24.

The existing structure is designated a Type B structure in accordance with Sec. 411.

SHIRLEY CONTRACTING COMPANY, LLC

Dewberry

VDOT

COMMONWEALTH OF VIRGINIA

DEPARTMENT OF TRANSPORTATION

PROPOSED BRIDGE WIDENING ON
RTE. 64 OVER RTE. 105 (FORT EUSTIS BLVD)
CITY OF NEWPORT NEWS
PROJ. 0064-965-264

PRELIMINARY PLANS

THESE PLANS NOT TO BE USED FOR CONSTRUCTION

No.	Description	Date

REVISIONS

For Table of Revisions, see Sheet 2.

Recommended for Approval: _____ (Developer's Designee) Date

Approved: _____ Chief Engineer Date

Date: _____

166-24A

Sheet 28 of

© 2014, Commonwealth of Virginia

PLANS BY:	Consultant
COORDINATED:	
SUPERVISED:	
DESIGNED:	Soroush Yazdi
DRAWN:	Soroush Yazdi
CHECKED:	James Davidson

$DATE$ $TIME$
GPE_64 over Rt 105.dgn

STATE	FEDERAL AID ROUTE	FEDERAL AID PROJECT	STATE ROUTE	STATE PROJECT	SHEET NO.
VA.	—	NHA-064-3(479)		, B618, B619	29

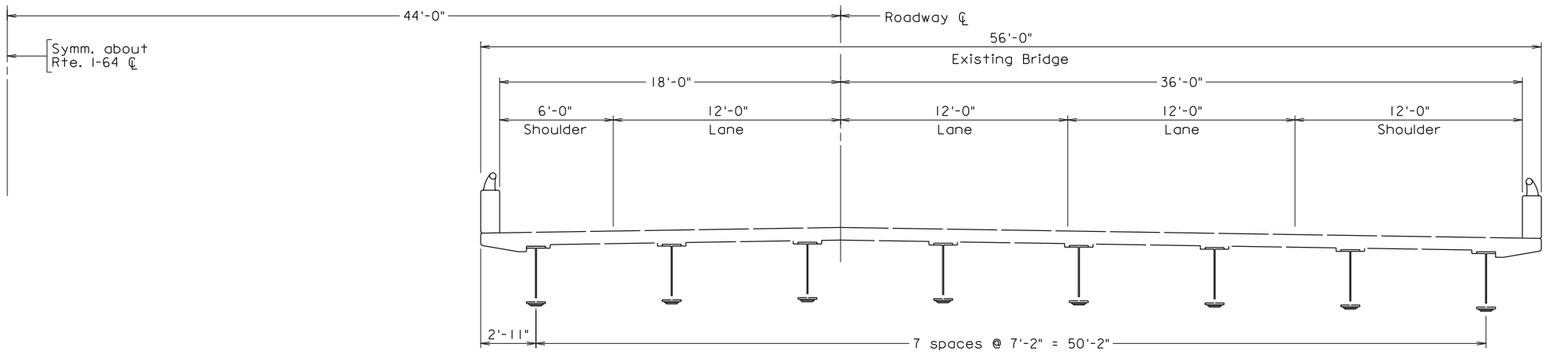

EXISTING BRIDGE - TRANSVERSE SECTION
(EBL shown, WBL opposite hand)

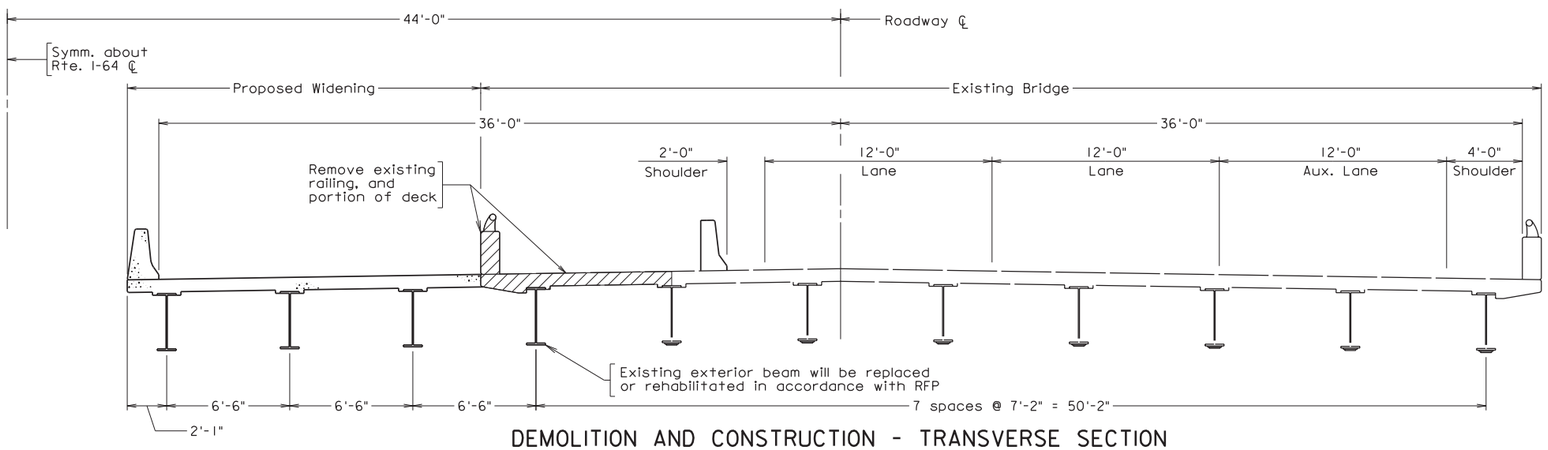

DEMOLITION AND CONSTRUCTION - TRANSVERSE SECTION
(EBL shown, WBL opposite hand)

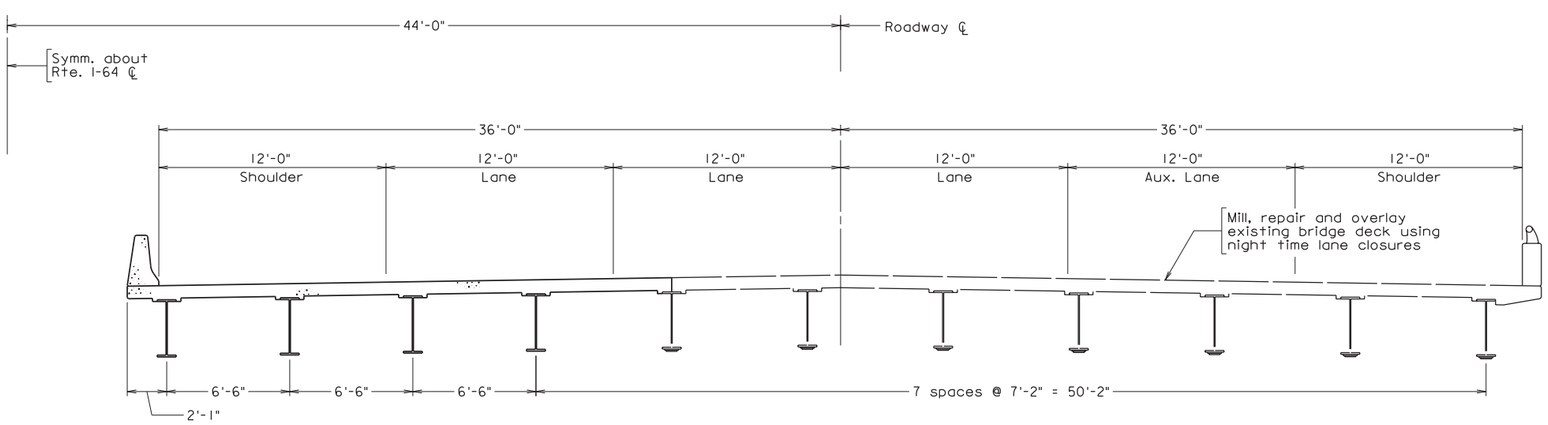

FINAL - TRANSVERSE SECTION
(EBL shown, WBL opposite hand)

Scale: 1/4" = 1'-0", unless otherwise shown

© 2014, Commonwealth of Virginia

Notes:

All sections shown looking station-ahead (to the east).

A Potential Sequence of Construction for each bridge is provided below.

Stage 1: Install temporary traffic controls and shift traffic towards the outside of the existing bridge, maintaining two 12'-0" lanes. Remove railing, portion of deck, and existing fascia girder (if replaced) from median side of existing bridge.

Stage 2: Construct proposed bridge widening. Longitudinal deck joint shall be located over an existing beam/girder line.

Stage 3: Remove temporary traffic controls and shift traffic to final alignment. Using night time lane closures, remove existing overlay and the top inch of the existing bridge deck, patch existing deck as required, close existing joints over the piers, and extend deck slabs over the backwalls, and place overlay on existing bridge deck.

Legend:

Existing structure to be removed.

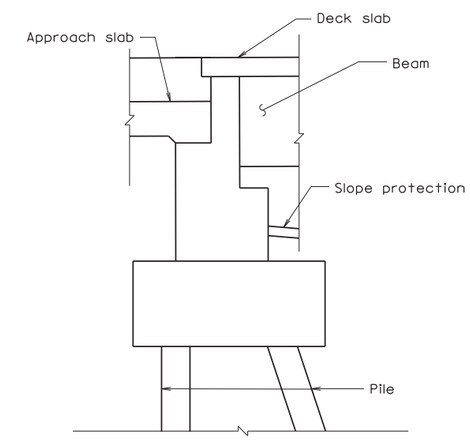

ABUTMENT SECTION

SHIRLEY CONTRACTING COMPANY, LLC

Dewberry

PRELIMINARY PLANS
THESE PLANS NOT TO BE USED FOR CONSTRUCTION

No.	Description	Date

Revisions

COMMONWEALTH OF VIRGINIA
DEPARTMENT OF TRANSPORTATION

STRUCTURE AND BRIDGE DIVISION

TRANSVERSE SECTION
(I-64 OVER RTE 105)

Designed: SFY
Drawn: SFY
Checked: JDD

Date

Plan No. 166-24A

Sheet No. 29 of

Typ Section_64 over Rt 105.dgn

STATE	FEDERAL AID ROUTE	FEDERAL AID PROJECT	STATE ROUTE	STATE PROJECT	SHEET NO.
VA.	—	NHA-064-3(479)	64	0064-965-264, B620, B621	30
NBIS Number: 000000000020696 000000000020697			UPC No. 104905		
Federal Oversight Code: FO			FHWA Construction and Scour Code: X081-S8		

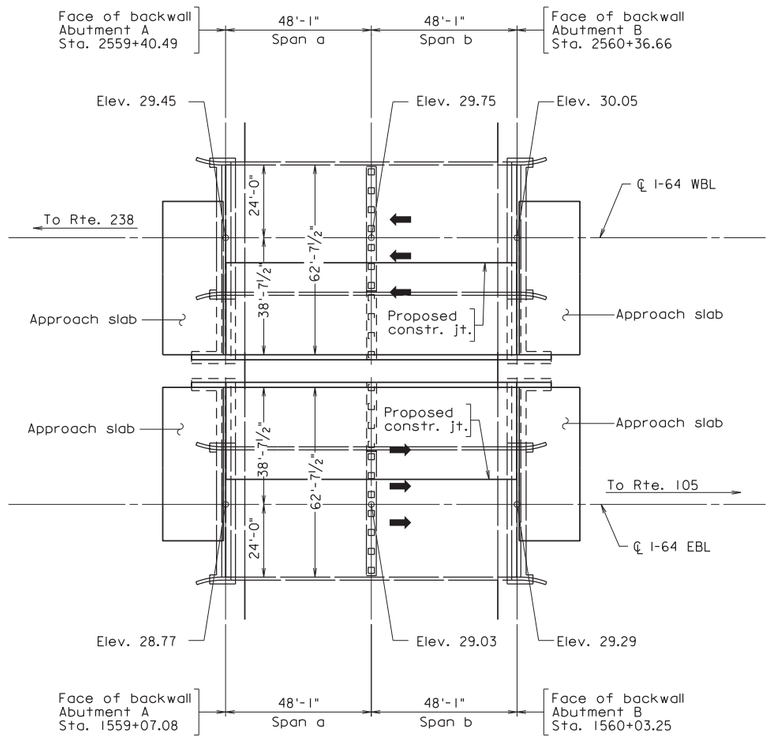

PLAN

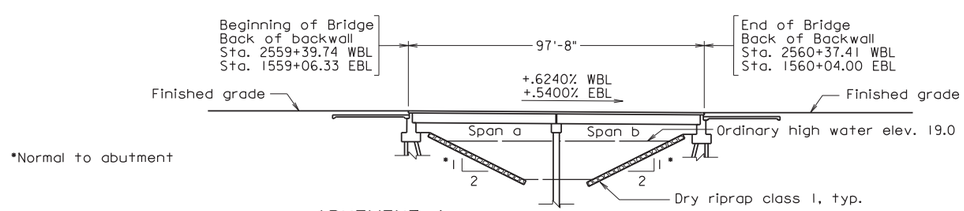

BENT I

DEVELOPED SECTION ALONG WIDENING

Project Location

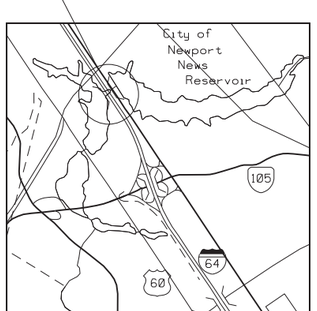

LOCATION MAP
Not to scale

Bridge repair notes:

1. All superstructure and substructure repairs will be performed on the existing bridges in accordance with RFP requirements.
2. Joints at piers will be retrofitted in accordance with Structure and Bridge Manual Volume V, Part 2, File No. 10.02-2.
3. Bearings of existing girders will be replaced.

Scale: 1" = 25'

DESIGN EXCEPTION(S):

None

GENERAL NOTES:

Width: 62'-7½" face-to-face of rails.

Span layout: 48'-1" - 48'-1"

Capacity: HL-93 loading.

Drainage Area: 14.2 square miles.

Specifications:

Construction: Virginia Department of Transportation Road and Bridge Specifications, 2007.

Design: AASHTO LRFD Bridge Design Specifications, 6th Edition, 2012; and VDOT Modifications.

Standards: Virginia Department of Transportation Road and Bridge Standards, 2008.

These plans are incomplete unless accompanied by the Supplemental Specifications and Special Provisions included in the contract documents.

Low permeability concrete shall be used in this project.

Corrosion resistant reinforcing steel will be utilized in accordance with MM-S&B-81

Bridge Nos. of existing bridges are 2204 (EBL) and 2205 (WBL). Plan Nos. are 163-25.

SHIRLEY CONTRACTING COMPANY, LLC

Dewberry

VDOT

COMMONWEALTH OF VIRGINIA

DEPARTMENT OF TRANSPORTATION

PROPOSED BRIDGE WIDENING ON
RTE. 64 OVER LEE HALL RESERVOIR
CITY OF NEWPORT NEWS
PROJ. 0064-965-264

PRELIMINARY PLANS

THESE PLANS NOT TO BE USED FOR CONSTRUCTION

No.	Description	Date

REVISIONS

For Table of Revisions, see Sheet 2.

Recommended for Approval: _____ (Developer's Designee) Date

Approved: _____ Chief Engineer Date

Date: _____

© 2014, Commonwealth of Virginia

163-25A

Sheet 30 of

PLANS BY:	Consultant
COORDINATED:	
SUPERVISED:	
DESIGNED:	Soroush Yazdi
DRAWN:	Soroush Yazdi
CHECKED:	James Davidson

$DATE$ $TIME$
GPE_64 over Reservoir.dgn

STATE	FEDERAL AID ROUTE	FEDERAL AID PROJECT	STATE ROUTE	STATE PROJECT	SHEET NO.
VA.	—	NHA-064-3(479)		, B620, B621	31

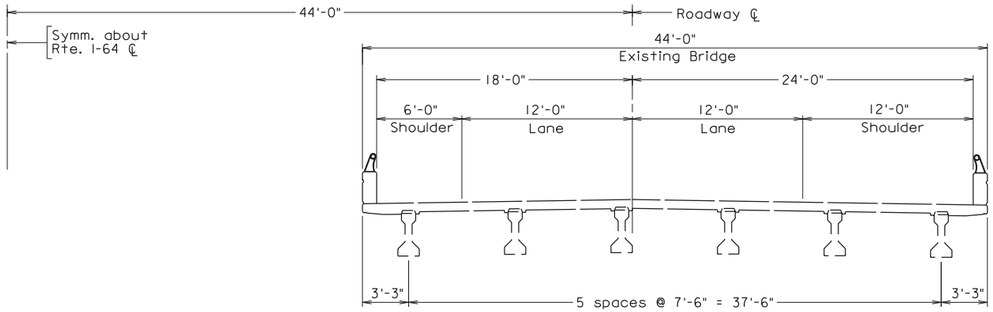

EXISTING BRIDGE - TRANSVERSE SECTION
(EBL shown, WBL opposite hand)

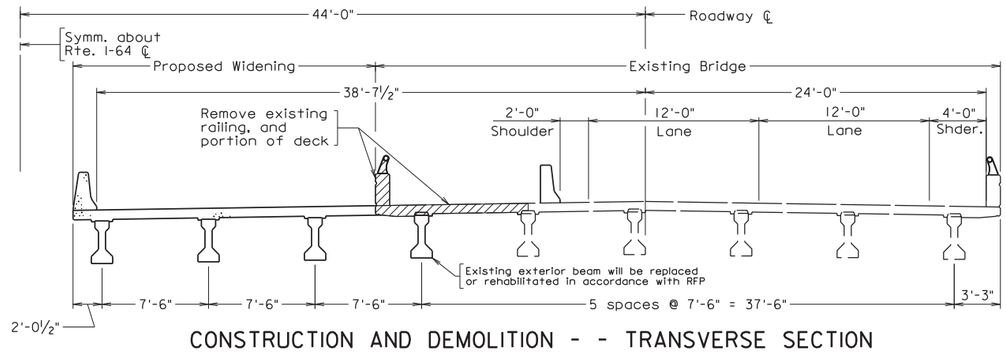

CONSTRUCTION AND DEMOLITION - - TRANSVERSE SECTION
(EBL shown, WBL opposite hand)

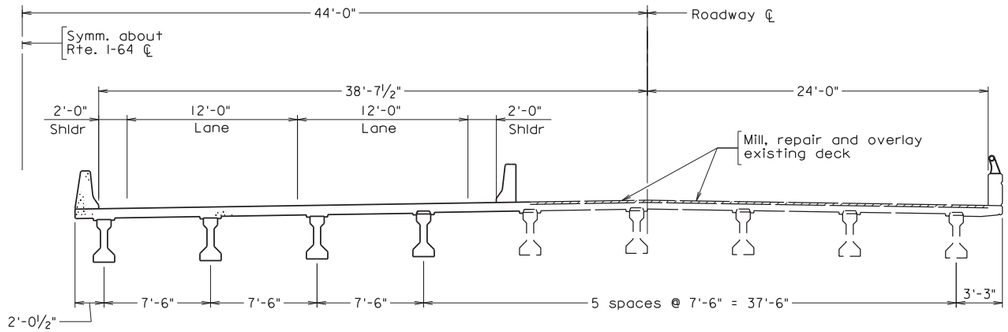

OVERLAY - TRANSVERSE SECTION
(EBL shown, WBL opposite hand)

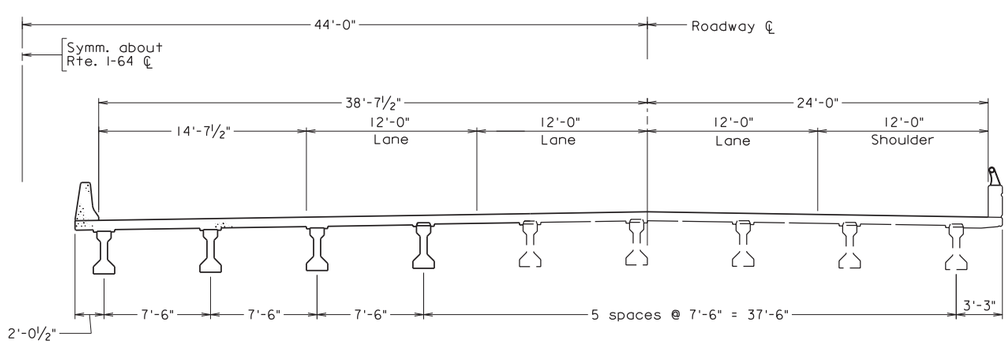

FINAL - TRANSVERSE SECTION
(EBL shown, WBL opposite hand)

Scale: ¼" = 1'-0", unless otherwise shown

© 2014, Commonwealth of Virginia

Notes:

All sections shown looking station-ahead (to the east).

A potential Sequence of Construction for both bridges is provided below.

Stage 1: Install temporary traffic controls and shift traffic towards the outside of the existing bridge, maintaining two 12'-0" lanes. Remove railing, portion of deck and existing fascia beam (if replaced) from median side of existing bridge.

Stage 2: Construct proposed bridge widening. Longitudinal deck joint shall be located over an existing beam/girder line.

Stage 3: Shift traffic to the previously constructed widening, maintaining two 12'-0" lanes. Remove the existing wearing surface and the top inch of the original bridge deck. Patch the existing bridge deck as required and close existing joint over the pier, and extend deck slabs over the backwalls. Place overlay on existing bridge deck.

Stage 4: Remove traffic controls and shift traffic to final alignment.

Legend:

Existing structure to be removed.

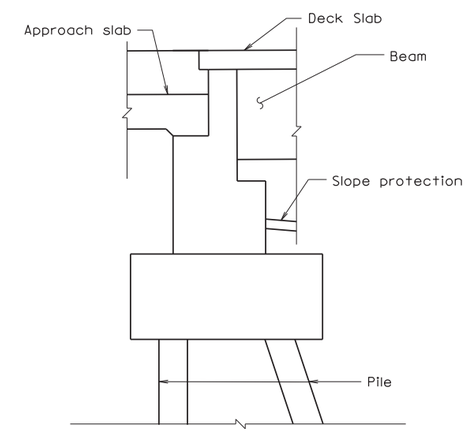

ABUTMENT SECTION

SHIRLEY CONTRACTING COMPANY, LLC

Dewberry

PRELIMINARY PLANS

THESE PLANS NOT TO BE USED FOR CONSTRUCTION

No.	Description	Date

Revisions

COMMONWEALTH OF VIRGINIA
DEPARTMENT OF TRANSPORTATION

STRUCTURE AND BRIDGE DIVISION

TRANSVERSE SECTION
(I-64 OVER LEE HALL RESERVOIR)

Designed: SFY
Drawn: SFY
Checked: JDD

Date

Plan No. 163-25A

Sheet No. 31 of

Typ Section_64 over Reservoir.dgn