ELECTRONIC COPY

A DESIGN-BUILD PROJECT

ROUTE 7 WIDENING

AND BRIDGE REHABILITATION

OVER DULLES TOLL ROAD AND AIRPORT ACCESS HIGHWAY

VOLUME I

LETTER OF SUBMITTAL
ATTACHMENTS TO LETTER OF SUBMITTAL

Prepared for

VDOT

State Project No.: 0007-029-139, P101, R201, C501, B617, B618
Federal Project No.: BR-5401 (738) Contract ID Number: C00082135DB77

WAGMAN

rda

March 9, 2015

4.1 Letter of Submittal

Volume I

4.1 Letter of Submittal

March 9, 2015

Mr. Stephen D. Kindy, P.E.
Alternate Project Delivery Office
Virginia Department of Transportation
1401 East Broad Street
Richmond, VA 23219

RE: A Design-Build Project, Route 7 Widening and Bridge Rehabilitation over Dulles Toll Road and Airport Access Highway
Fairfax County, Virginia
State Project No.: 0007-029-139, P101, R201, C501, B617, B618
Federal Project No.: BR-5401(738) Contract ID Number: C00082135DB77

Dear Mr. Kindy:

G.A. & F.C. Wagman, Inc. (Wagman) is pleased to submit one (1) original paper version of our Letter of Submittal, with full supporting documentation, which bear original signatures; and one (1) CD-ROM containing the entire Letter of Submittal along with attachments in a single cohesive Adobe PDF file to the Virginia Department of Transportation (VDOT) to provide Design-Build (DB) services for the Route 7 Widening Project in Fairfax County, VA. We have carefully reviewed the Request for Proposals (RFP), RFP Addendum Numbers 1, 2 & 3, and RFP Questions and Answers; attended the pre-proposal meetings; and visited the site.

Project Team

G.A. & F.C. Wagman, Inc. has assembled a strong and efficient team of highly qualified professionals with the necessary expertise to successfully meet the goals and objectives of this project. Wagman has selected Rinker Design Associates, P.C. (RDA) as our lead design firm to provide all engineering services for this project. Wagman and RDA have excellent reputations in the design and construction of similar projects, with proven prior experience in delivering quality D-B projects. Other members of our team include Whitman, Requardt & Associates, LLP; Quinn Consulting Services, Inc.; DMY Engineering Consultants, Inc.; McCormick Taylor, Inc.; and Branch Highways, Inc.

4.1.1 Offeror's Official Representative Information. The full legal name and address of Wagman is as follows:

G.A. & F.C. Wagman, Inc.	Phone: (717) 767-8277
3290 N. Susquehanna Trail, York, PA 17406-9754	Fax: (717) 767-5546

4.1.2 Declaration of Intent. As the Offeror, it is Wagman's intent, if selected, to enter into a contract with VDOT for the Project in accordance with the terms of this respective RFP.

4.1.3 120-Day Declaration. Pursuant to RFP Part 1, Section 8.2, we declare that the offer represented by this Letter of Submittal and Attachments will remain in full force and effect for one hundred twenty (120) days after the date the Letter of Submittal and Attachments are actually submitted to VDOT (March 9, 2015).

4.1.4 Point of Contact Information. Mr. David W. Lyle, Vice President & Division Manager of Wagman's Virginia Operations, is the official point of contact for the Wagman Team for all matters associated with this Letter of Submittal and Attachments. His contact information is as follows:

David W. Lyle, Vice President & Division Manager 26000 Simpson Road, North Dinwiddie, VA 23803	Phone: (804) 778-4444, Fax: (804) 778-4929 Email: dwlyle@wagman.com

4.1.5 Principal Officer Information. Mr. Gregory Andricos, P.E., Executive Vice President of Wagman, is the official principal officer of G.A. & F.C. Wagman, Inc. with whom this DB contract with VDOT will be written. His contact information is as follows:

Gregory Andricos, P.E., Executive Vice President 3290 N. Susquehanna Trail, York, PA 17406-9754	Phone: (717) 764-8521, Fax: (717) 767-5457 Email: gmandricos@wagman.com

4.1.6 Final Completion Date. In accordance with RFP Section 2.3.1, Wagman proposes a final completion date of September 1, 2017.

4.1.7 Proposal Payment Agreement. An executed Proposal Payment Agreement (Attachment 9.3.1) can be found in the Appendix.

4.1.8 Certification Regarding Debarment Forms. Certifications for Debarment for both Primary and Lower Tier Transactions have been completed and executed for the Offeror and all subconsultants, subcontractors, and other entities as identified as members of the Wagman Team. These forms can be found in the Appendix.

4.1.9 Written Statement of Compliance. Wagman's Letter of Submittal and Attachments are fully compliant with the Design Criteria Table included in the RFP Technical Requirements (Part 2) as Attachment 2.2 and all other requirements of this RFP. Wagman certifies that the proposed limits of construction to include all stormwater management facilities are located within the right-of-way limits shown on the RFP plans with the exception of permanent and temporary easements. Wagman also certifies that our design concept does not require Design Exception and/or Design Waivers unless they are identified or included in the RFP or Addenda.

4.1.10 DBE Commitment (8%). Wagman supports the Disadvantaged Business Enterprise (DBE) program and is committed to achieving the eight percent (8%) DBE participation goal for the entire value of the contract.

Wagman and RDA each have long and successful histories of serving VDOT on numerous projects. As a single, integrated DB Team, we will design and construct the Route 7 Widening and Bridge Rehabilitation over Dulles Toll Road and Airport Access Highway DB Project in a manner to ensure the greatest opportunity for success. We will create a transparent working relationship with VDOT and third party stakeholders to promote trust, confidence, and collaboration.

Respectfully,

G.A. & F.C. WAGMAN, INC.

David W. Lyle
Vice President & Division Manager

4.2 Attachments to the Letter of Submittal

Volume I

4.2 Attachments to the Letter of Submittal

4.2.1 Organizational Chart and Key Personnel Confirmation. With the exception of replacing our Construction Manager (CM), Mike Mansfield, P.E. (Wagman) with David Leber (Wagman), Wagman confirms that the information contained in our SOQ remains true and accurate in accordance with RFP Part 1, Section 11.4. The request to replace the CM was submitted and has been approved by VDOT in writing, which is included in the Appendix. The organizational chart (shown on page 4) has been updated (as designated by strike through and yellow highlight) to include the substitution of the CM. Our organizational chart shows the "chain of command" and identifies major functions to be performed and reporting relationships. The solid lines represent reporting relationships, and the dashed lines represent the coordination and communication relationships. The chart also shows that a clear separation exists between QA and QC functions.

3.3.2 Organizational Chart and Narrative

Team Members. The following firms will support Wagman and RDA on this Project:

- **Quinn Consulting Services, Inc. (QCS)** will provide the Quality Assurance Manager, QA inspection services, and oversight of the QA DBE laboratory (Specialized Engineering).
- **Whitman, Requardt & Associates, LLP (WR&A)** will provide bridge and geotechnical design as well as overlapping support in other areas of design.
- **Branch Highways, Inc. (BHI)**, as an exclusive subcontractor to G.A. & F.C. Wagman, Inc., will provide grading, storm drainage, and utility construction services.
- **DMY Engineering Consultants, Inc. (DMY)** will provide geotechnical drilling and laboratory services for design and Construction QC services.

The Project Team Organizational Chart is located below.

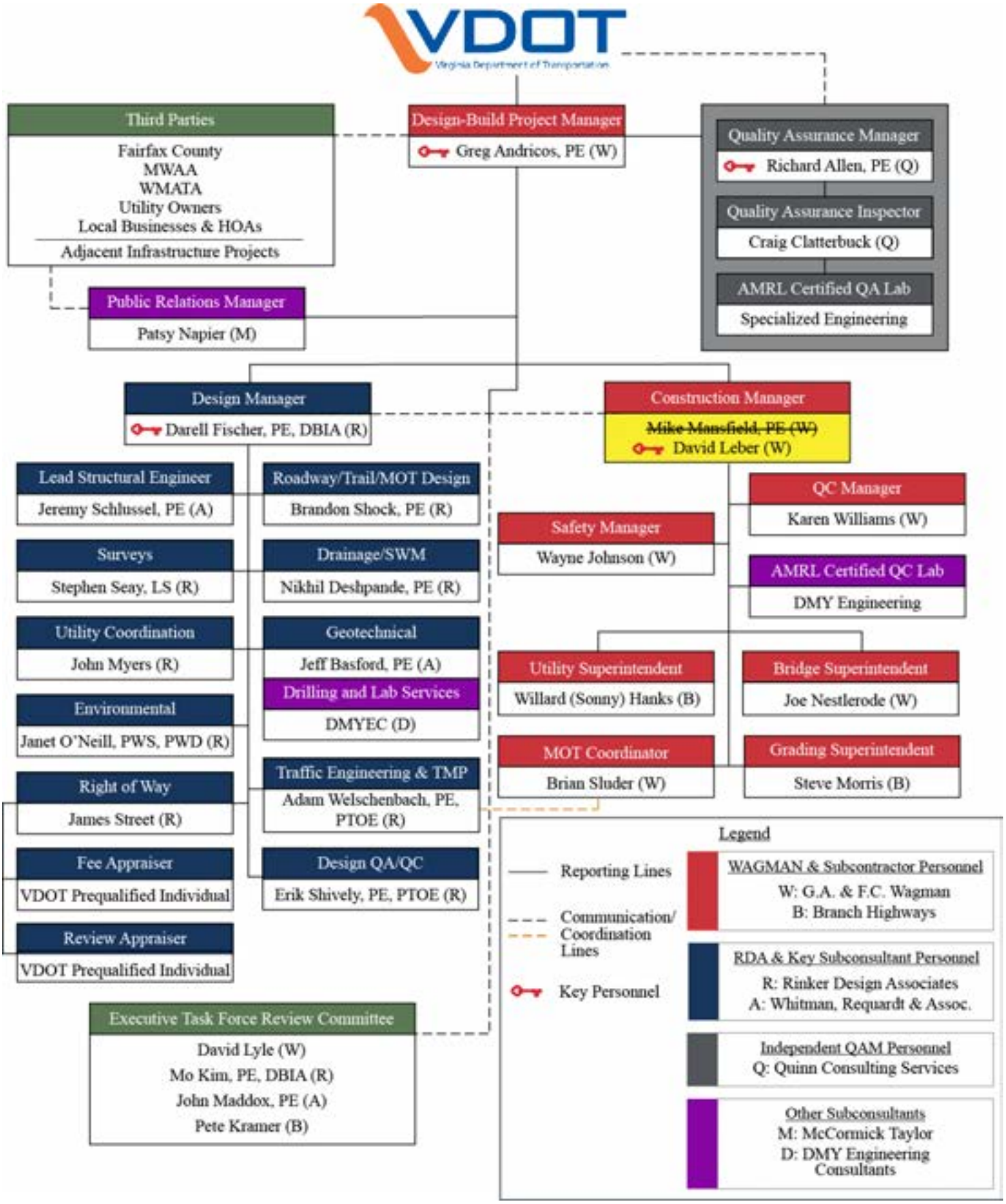
VDOT
Virginia Department of Transportation
Third Parties
Fairfax County
MWAA
WMATA
Utility Owners
Local Businesses & HOAs
Adjacent Infrastructure Projects
Design-Build Project Manager
Greg Andricos, PE (W)
Quality Assurance Manager
Richard Allen, PE (Q)
Quality Assurance Inspector
Craig Clatterbuck (Q)
AMRL Certified QA Lab
Specialized Engineering
Public Relations Manager
Patsy Napier (M)
Design Manager
Darell Fischer, PE, DBIA (R)
Construction Manager
~~Mike Mansfield, PE (W)~~
David Leber (W)
Lead Structural Engineer
Jeremy Schlussel, PE (A)
Roadway/Trail/MOT Design
Brandon Shock, PE (R)
QC Manager
Karen Williams (W)
Safety Manager
Wayne Johnson (W)
Surveys
Stephen Seay, LS (R)
Drainage/SWM
Nikhil Deshpande, PE (R)
AMRL Certified QC Lab
DMY Engineering
Utility Coordination
John Myers (R)
Geotechnical
Jeff Basford, PE (A)
Drilling and Lab Services
DMYEC (D)
Utility Superintendent
Willard (Sonny) Hanks (B)
Bridge Superintendent
Joe Nestlerode (W)
Environmental
Janet O'Neill, PWS, PWD (R)
MOT Coordinator
Brian Sluder (W)
Grading Superintendent
Steve Morris (B)
Right of Way
James Street (R)
Traffic Engineering & TMP
Adam Welschenbach, PE, PTOE (R)
Fee Appraiser
VDOT Prequalified Individual
Design QA/QC
Erik Shively, PE, PTOE (R)
Review Appraiser
VDOT Prequalified Individual
Executive Task Force Review Committee
David Lyle (W)
Mo Kim, PE, DBIA (R)
John Maddox, PE (A)
Pete Kramer (B)
Legend
Reporting Lines
Communication/ Coordination Lines
Key Personnel
WAGMAN & Subcontractor Personnel
W: G.A. & F.C. Wagman
B: Branch Highways
RDA & Key Subconsultant Personnel
R: Rinker Design Associates
A: Whitman, Requardt & Assoc.
Independent QAM Personnel
Q: Quinn Consulting Services
Other Subconsultants
M: McCormick Taylor
D: DMY Engineering Consultants

Functional Relationships and Communication. The integration of our design and construction staff with VDOT and the project stakeholders throughout the duration of the Project will promote routine and open communication. VDOT's participation in formal partnering will be requested to foster an atmosphere of trust and transparency between VDOT, the DB team, and project stakeholders. This will encourage open dialogue when issues arise that may jeopardize the success of the Project.

VDOT: The Department will coordinate directly with our DBPM as the primary contact for all aspects of design and construction oversight of the Project. Bi-weekly design and weekly construction progress meetings will include discussions on contract administration; safety; schedule updates; conflict resolution; stakeholder concerns; and progress updates for design, construction, and ROW acquisition. Open lines of communication between the QAM and VDOT will assist with monitoring quality assurance oversight.

Our Public Relations Manager (PRM) will conduct Open houses and other informal outreach efforts to allow the public to view plans and discuss concerns through the design and construction process. The DBPM, DM, and CM will be present to answer questions and address possible concerns. We anticipate VDOT's oversight and support in our coordination efforts with project stakeholders. Our PRM will facilitate informal meetings and outreach to stakeholders to minimize VDOT's direct efforts associated with public outreach.

Although our DBPM is not the point of contact through procurement, he will serve as VDOT's single point of contact for all design and construction related issues upon contract execution. Reporting to the DBPM are four primary positions; the QAM, DM, CM, and PRM. This structure, combined with our DBPM's maintenance of an action item log for potential issues and three-month look-ahead schedule will ensure the Project remains on-schedule and in conformance with VDOT commitments.

The QAM will report to our DBPM, with independent oversight by VDOT. QA Inspectors and Labs will report through the QAM. Our QAM will also monitor the construction QC program to ensure all work and materials, testing, and sampling is performed in accordance with the contract requirements and the "approved for construction" plans and specifications.

Design: Our DM will report to the DBPM and coordinate with the CM to develop an efficient and constructible design. He will work with the CM during construction to confirm field conditions meet design assumptions and reevaluate these assumptions if necessary. The Design QA/QC Manager will report to the DM and independently monitor the design QA/QC process. WR&A will all be subcontracted with RDA for their respective services and their individual discipline leads will report to the DM. This structure will ensure effective and efficient design management.

Coordination between the design and construction staff will start during preparation of the technical proposal and continue throughout the Project to incorporate means and methods into the design. Meetings will also include design disciplinary reviews, over the shoulder reviews, and comment resolution meetings with stakeholders.

Table 3.3.1 Experience of Select **DESIGN** Staff

Name	Yrs Exp	Expertise
Brandon Shock, PE	15	Roadway design, pedestrian access, and TMP
Jeremy Schlussel, PE	18	Bridge, foundation, and retaining wall designs
Nikhil Deshpande, PE	12	Water resource design, hydrology, and hydraulics
Stephen Seay, LS	28	Topographic and boundary surveys and platting
John Myers	14	Coordination with utility companies and cost estimates
Jeff Basford, PE	14	Geotechnical analysis, reports, and recommendations
Janet O'Neill, PWS, PWD	40	NEPA, Wetlands, and VSMP permitting
James Street	38	ROW negotiations and management
Adam Welschenbach, PE, PTOE	11	Traffic analysis, signal design, and TMP
Erik Shively, PE, PTOE	20	Roadway, traffic, and TMP designs

Construction: The CM will report to the DBPM and communicate directly with the QAM/DM/PRM and VDOT's field personnel to provide construction progress updates and verify conformance with the contract documents. He will also communicate with the DM during both to ensure construction is consistent with the project design. Our CM will be on-site for the duration of construction operations and will personally oversee the entire construction team. Construction leads have been identified for Bridges, Grading, Utilities, MOT Coordination, Construction QC, and Safety—all reporting to the CM.

Table 3.3.2 Experience of Select **CONSTRUCTION** Staff

Name	Yrs Exp	Expertise
Joe Nestlerode	38	Bridges
Steve Morris	20	Grading
Sonny Hanks	32	Utilities
Brian Sluder	15	MOT Coordination
Karen Williams	12	Construction QC
Wayne Johnson	21	Safety

Daily coordination meetings between the CM, senior inspectors, and VDOT's representative will facilitate communication regarding construction progress. Weekly planning and schedule meetings will include the QA and QC team, VDOT representatives, and design team members as necessary. Before each shift, field supervisors will review safety and performance with their crews to establish protocols in upcoming work.

Executive Task Force Review Committee: The Executive Task Force Review Committee will coordinate with the DM and the CM to provide a unified and global evaluation of project challenges to ensure that the project's goals are maintained. They will establish a resolution hierarchy to ensure that solutions are developed and coordinated at the lowest level feasible. Issues will be tracked through the use of a resolution matrix and will be reported to the DBPM for his acceptance and implementation.

Our Executive Task Force Review Committee is composed of vice presidents from our key design and construction team members in order to facilitate quick responses and resolutions. Additionally, they bring extensive experience on DB and complex projects within their areas of expertise.

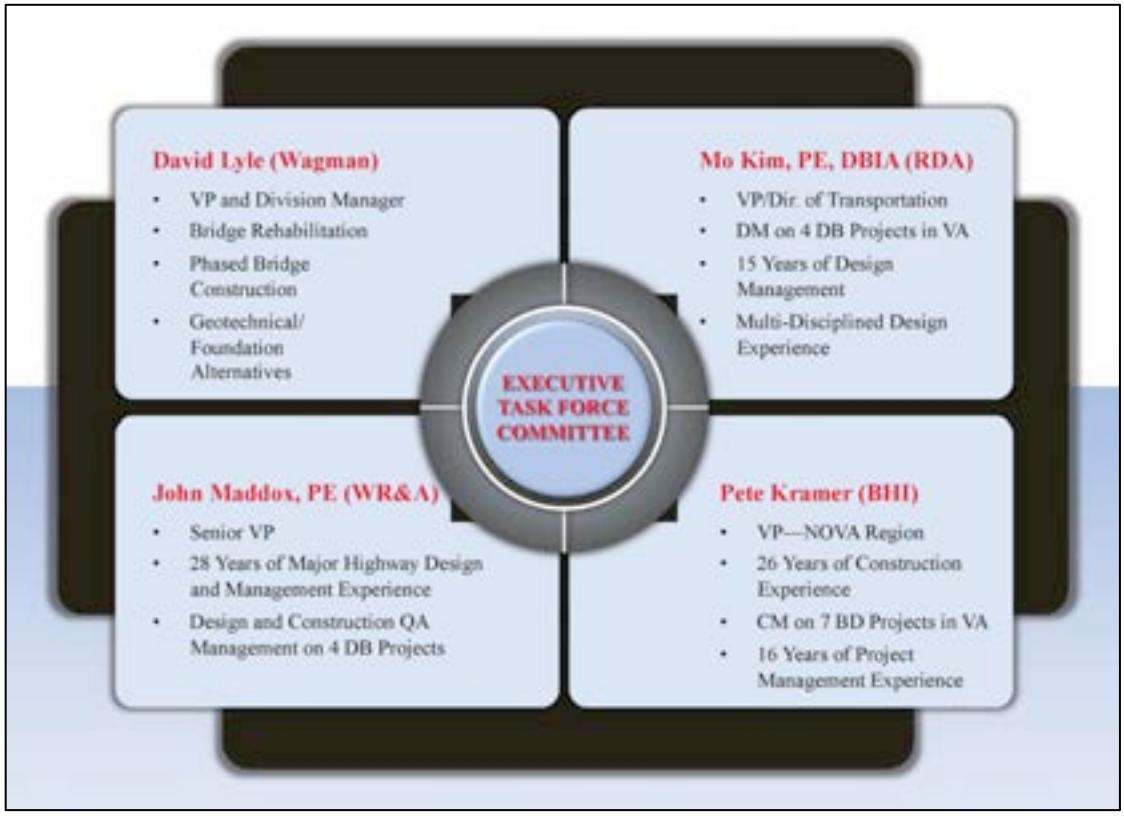

4.2.4 Proposal Schedule and Narrative. The Wagman Team has provided a Proposal Schedule and Proposal Narrative demonstrating our understanding of the complexities and interrelationships of the technical elements of the Project. PDF copies of the Proposal Schedule and narrative as well as a back-up copy of the Proposal Schedule's source document have been provided on a CD-ROM.

4.2.4.1 Proposal Schedule. The Wagman Team has developed a Proposal Schedule (located in Volume II), which takes into account the internal plan reviews, VDOT plan reviews and approvals, environmental permitting and constraints, right-of-way acquisition, utility relocation, construction activities, and QA/QC inspection and testing. Our Final Completion Date of September 1, 2017 is within the required time frame as listed in RFP Section 2.3.1.

The Proposal Schedule depicts the Wagman Team's proposed overall sequence of work and duration for each work task and deliverable required to complete the Project. The schedule is organized using a hierarchical Work Breakdown Structure (WBS), divided into major phases of the Project.

4.2.4.2 Proposal Schedule Narrative. In addition to the technical elements, the narrative also describes the Wagman Team's plan to accomplish the Work including, but not limited to, the overall sequencing, a description and explanation of the Critical Path, proposed means and methods, and other key assumptions upon which the Proposal Schedule is based.

Schedule Development

The Wagman Team has reviewed in detail the scope and schedule requirements outlined in the RFP documents. Numerous site visits and team meetings were planned, pre-proposal meetings were attended, proprietary meeting discussions occurred, and the schedule task force was developed to build a comprehensive schedule for the Route 7 Widening and Bridge Rehabilitation over Dulles Toll Road & Airport Access Highway.

The Wagman Team is committed to providing VDOT with a completed Project by September 1, 2017.

Project Milestones

Project Milestones		572.0d	25-Jun-15	01-Sep-17
A1000	Notice to Proceed	0.0d	25-Jun-15	
A1010	Construction Start	0.0d	10-Nov-15	
A1020	Substantial Completion of Design	0.0d		29-Mar-16
A1030	Final Completion (Contract = 01-SEP-2017)	0.0d		01-Sep-17
Bridge Milestones		454.0d	07-Dec-15	01-Sep-17
A1070	Start Construction Phase 1 Bridge	0.0d	07-Dec-15	
A1160	Completion of Phase 1	0.0d		24-Aug-16
A1130	Completion of Phase 2	0.0d		28-Feb-17
A1140	Completion of Phase 3	0.0d		07-Aug-17
A9640	Completion of Phase 4	0.0d		01-Sep-17

Work Breakdown Structure

The following Work Breakdown Structure (WBS) provided by the Wagman Team integrates all preconstruction activities as well as construction activities for the Route 7 Widening and Bridge Rehabilitation over Dulles Toll Road & Airport Access Highway project into the schedule. The following is a summary overview of the Phases of Construction succeeded by the complete WBS layout.

Milestones/General Conditions and Preconstruction Activities. These sections contain all non-construction related activities that are pertinent to the project. The following categories represent these sections:

- **Milestones:** Major project dates to achieve project completion goals.
- **General Conditions:** Project management and punch list items required for the project.
- **Design:** Duration set aside for the preliminary, right-of-way/roadway design, and final design of the project. The design will consist of three phases to facilitate VDOT reviews and approvals to advance the start of construction. Whenever possible, permits required for construction will be obtained in advance of final design. The Wagman Team will work with VDOT during the design using over-the-shoulder reviews and provide comment resolution with all submissions to reduce subsequent review cycles. The design category also includes the following:
  - Structures & Bridges: Preliminary and final design of the Route 7 bridge and the Shared-Use Path structures.
  - Scope Validation: Duration for discussion between VDOT and the Wagman Team for validation and approval of project scope.
  - Survey: Timeframe allowing all necessary surveying for the design and right-of-way acquisition process.
  - Geotechnical: All borings and lab work required to prepare the Geotechnical Reports.
  - VPDES/SWPPP Permitting: Timeframe set aside for permitting.
  - Individual Wetlands Permits: Timeframe set aside for permitting.
  - Right-of-Way Acquisition Services: Necessary activities for the procurement of public and private property for right-of-way.
  - Utility Coordination and Relocation: Necessary activities to relocate utilities including the design, procurement, and construction of utilities that may be affected by construction.

Construction Activities. This project has been designed and set up in four phases built around the bridge construction sequencing. Each phases is further subdivided into work areas.

- **Phase I:** Phase I involves the construction of the new bridge structure between the existing bridges as well as the exterior portion of the new bridge structure located on the north side of the existing bridge. This phase is further broken down into two steps:
  - Phase IA is a preparatory step to allow traffic on the Route 7 East Bound Lane (EBL) bridge to be shifted to the right to allow room for Phase I construction. A temporary walkway will be constructed on the outside of the EBL bridge to maintain pedestrian traffic while the existing sidewalk is removed. Traffic will then be shifted to the right utilizing the space where the sidewalk was originally located.
  - Phase IB includes construction of the new bridge substructure and superstructure located between the existing bridges. New utility relocation will be advanced with phased bridge widening for the under-bridge utility relocation. Bridge construction will require multiple crews to maintain the schedule. Abutment and pier construction will occur simultaneously. Pier construction is sequenced to allow traffic shifts on Dulles Toll Road and Dulles Airport Access Road. Pier 2 construction will be sequenced after Pier 1, and Pier 4 construction will be sequenced after Pier 5. Pier construction will require lane closures in accordance with the RFP.

  Preliminary construction activities in Phase I will occur prior to Final Design. These preliminary activities include maintenance of traffic (MOT) as well as support of excavation in preparation for the foundation activities. This will allow new construction to begin immediately upon receiving Approved

For Construction (AFC) plans. Roadway work on Route 7 will occur concurrently with bridge construction and will include drainage and pavement required to tie into the Phase I bridge.

- **Phase II:** Phase II involves new construction within the existing Route 7 West Bound Lane (WBL) footprint. WBL traffic will be shifted onto the new structure completed in Phase I to allow Phase II construction to occur. Phase II bridge construction will include excavation, foundations, substructure, superstructure, and pavement approaches. Roadway work and widening in the existing WBL location will occur simultaneously with the bridge construction. Construction of the NW Quadrant and NE Quadrant Shared-Use Paths are scheduled in Phase II; however, work may commence in Phase I.
- **Phase III:** Phase III involves new construction within the existing Route 7 EBL footprint. Vehicular and pedestrian traffic will be shifted onto the completed structure to allow Phase III activities to occur. Phase III bridge construction will include excavation, foundations, substructure, superstructure, and pavement approaches. Roadway work and widening in the existing EBL location will occur simultaneously with the bridge construction. Construction of the SW Quadrant and SE Quadrant Shared-Use Paths are scheduled in Phase III; however, some work activities may commence in previous phases.
- **Phase IV:** Phase IV involves construction of the median between Route 7 WBL and EBL. Traffic will be shifted while this Phase is underway and then re-shifted to its final location at the end of this Phase.

Project Work Breakdown Structure

04-Mar-15 15:15

WBS Code	WBS Name	Total Activities
Rt. 7 DB	Rt. 7 Widening and Bridge Rehab over DTR - WBS	579
Rt. 7 DB.1	Milestones and General Conditions	13
Rt. 7 DB.1.1	Milestones	9
Rt. 7 DB.1.1.1	Project Milestones	4
Rt. 7 DB.1.1.3	Bridge Milestones	5
Rt. 7 DB.1.4	General Conditions	4
Rt. 7 DB.1.4.1	Entire Porject	4
Rt. 7 DB.2	Preconstruction	244
Rt. 7 DB.2.1	Design	225
Rt. 7 DB.2.1.1	Structures and Bridges	39
Rt. 7 DB.2.1.1.1	Route 7 Bridge	12
Rt. 7 DB.2.1.1.2	NW Quadrant SUP Underpasses and Headwalls	9
Rt. 7 DB.2.1.1.3	NE Quadrant SUP Underpasses, Headwalls and Retaining Walls	9
Rt. 7 DB.2.1.1.4	SE Quadrant SUP Pedestrian Bridges, Headwalls and Retaining Walls	9
Rt. 7 DB.2.1.2	Scope Validation	3
Rt. 7 DB.2.1.3	Survey	10
Rt. 7 DB.2.1.4	Geotechnical	65
Rt. 7 DB.2.1.4.1	GER 1	12
Rt. 7 DB.2.1.4.2	GER 2	12
Rt. 7 DB.2.1.4.3	GER 3	12
Rt. 7 DB.2.1.4.4	GER 4	12
Rt. 7 DB.2.1.4.5	GER 5	12
Rt. 7 DB.2.1.5	Preliminary Design	15
Rt. 7 DB.2.1.5.1	Roadway, Drainage, Landscaping and Noise	7
Rt. 7 DB.2.1.5.2	Traffic	8
Rt. 7 DB.2.1.6	F/ROW Plans	23
Rt. 7 DB.2.1.6.1	Roadway, Drainage, Lanscaping and Noise	8
Rt. 7 DB.2.1.6.2	Traffic	8
Rt. 7 DB.2.1.6.3	Lighting	7
Rt. 7 DB.2.1.7	Final Design	23
Rt. 7 DB.2.1.7.1	Roadway, Drainage, Landscaping and Noise	8
Rt. 7 DB.2.1.7.2	Traffic	8
Rt. 7 DB.2.1.7.3	Lighting	7
Rt. 7 DB.2.1.8	VPDES/SWPPP Permitting	5
Rt. 7 DB.2.1.9	Individual Wetlands Permits	11
Rt. 7 DB.2.1.10	Right of Way Acquisition Services	20
Rt. 7 DB.2.1.11	Utility Coordination and Relocations	9
Rt. 7 DB.2.1.12	Construction Engineering Services	2
Rt. 7 DB.2.3	Construction Submittals	14
Rt. 7 DB.2.4	Acquisition	5
Rt. 7 DB.5	Construction	322
Rt. 7 DB.5.1	Phase I	111
Rt. 7 DB.5.1.1	Phase 1A	3
Rt. 7 DB.5.1.2	Phase 1B	107
Rt. 7 DB.5.1.2.1	Bridge	76
Rt. 7 DB.5.1.2.1.1	Abuments	24
Rt. 7 DB.5.1.2.1.2	Piers	35
Rt. 7 DB.5.1.2.1.3	Superstructure	14
Rt. 7 DB.5.1.2.3	Roadway Rt. 7	26
Rt. 7 DB.5.1.2.3.1	Sta. 522+00 to 530+99 (West of Bridge)	12
Rt. 7 DB.5.1.2.3.2	Sta. 535+36 to 547+21 (East of Bridge)	12
Rt. 7 DB.5.7	Phase 2	105
Rt. 7 DB.5.7.2	Bridges	35
Rt. 7 DB.5.7.2.3	Abutments	14
Rt. 7 DB.5.7.2.6	Piers	5
Rt. 7 DB.5.7.2.8	Superstructure	15
Rt. 7 DB.5.7.3	SUP	28
Rt. 7 DB.5.7.3.1	NW Quadrant	14
Rt. 7 DB.5.7.3.2	NE Quadrant	14
Rt. 7 DB.5.7.1	Roadway Rt. 7 WBL	32
Rt. 7 DB.5.7.1.8	Sta. 522+00 to 530+99 (West of Bridge)	15
Rt. 7 DB.5.7.1.1	Sta. 535+36 to 547+21 (East of Bridge)	15
Rt. 7 DB.5.7.4	BMP #1	5
Rt. 7 DB.5.8	Phase 3	99
Rt. 7 DB.5.8.3	Bridge	35
Rt. 7 DB.5.8.3.3	Abutments	14
Rt. 7 DB.5.8.3.4	Piers	5
Rt. 7 DB.5.8.3.5	Superstructure	15
Rt. 7 DB.5.8.5	Roadway Rt. 7 EBL	32
Rt. 7 DB.5.8.5.Sta.	Sta. 522+00 to 530+99 (West of Bridge)	15
Rt. 7 DB.5.8.5.1	Sta. 535+36 to 547+21 (East of Bridge)	15
Rt. 7 DB.5.8.2	SUP	27
Rt. 7 DB.5.8.2.1	SW Quadrant	12
Rt. 7 DB.5.8.2.2	SE Quadrant	15
Rt. 7 DB.5.10	Phase 4	7
Rt. 7 DB.5.10.1	Bridge	1
Rt. 7 DB.5.10.2	Roadway	6
Rt. 7 DB.5.10.2.1	Sta. 522+00 to 530+99 (West of Bridge)	1
Rt. 7 DB.5.10.2.2	Sta. 535+36 to 547+21 (East of Bridge)	1

Page 1 of 1

(c) Primavera Systems, Inc.

Calendars

The Wagman Team has incorporated five calendars into the Project Schedule:

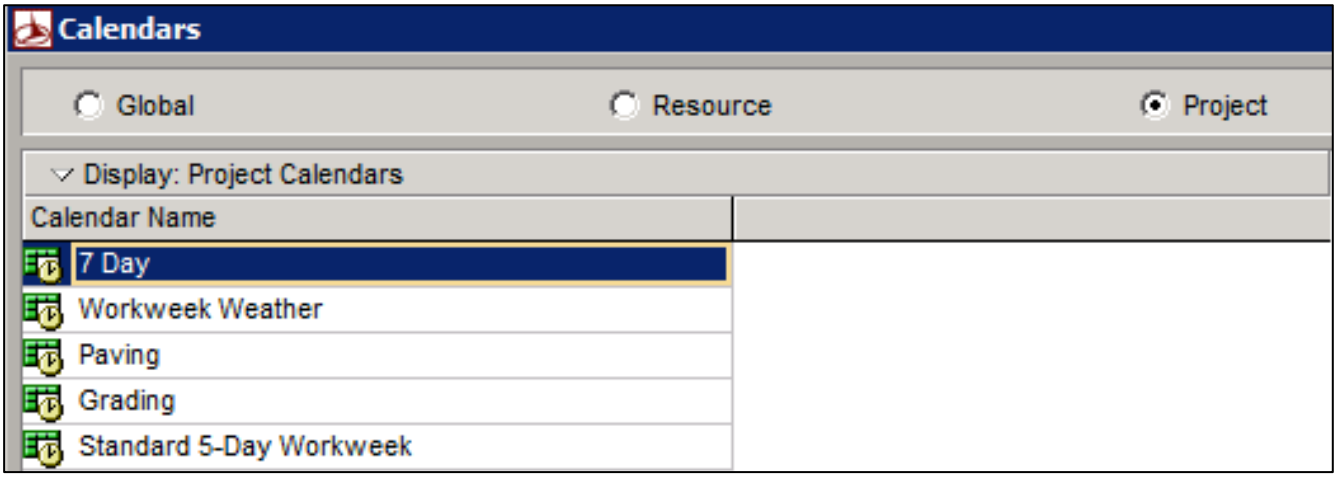

- **7 Day:** This calendar holds every day as a working day. This calendar is only attached to non-production activities.
- **Workweek Weather:** This calendar is the base calendar for construction activities. It incorporates a standard workweek, including weather days.
- **Paving:** This calendar is present for applications that are constrained by temperature restrictions by The Department. Additionally, paving operations are further affected by asphalt lay down temperature restrictions and material availability interruptions due to subcontractor plant shut downs. This calendar runs from the end of December to the beginning of March.
- **Grading:** This calendar is present for construction activities related to earthwork. The end of December through the beginning of March are normally difficult months to perform any earthwork related activities. If weather allows, work activities will continue during this calendar period. The schedule will be adjusted as necessary during these months to reflect actual progress.
- **Standard 5-Day Workweek:** This calendar is the base calendar for design activities and incorporates a standard workweek that does not include weather days.

Critical Path

The critical path for the project runs through the bridge design and construction. It begins with the preparation of the Route 7 bridge plans, which determines when new construction can begin. The critical path runs though the bridge substructure and then into the bridge superstructure. The critical path also includes the tie-ins and traffic switches between the different phases of construction. The critical path ends with final road finishes.

Critical Path Breakdown

Rt. 7 Widening and Bridge Rehab over DTR - | Classic WBS Layout | 06-Mar-15 14:16

Activity ID	Activity Name	Planned Duration	Start	Finish
Rt. 7 Widening and Bridge Rehab over DTR - WBS		572.0d	25-Jun-15	01-Sep-17
Milestones and General Conditions		572.0d	25-Jun-15	01-Sep-17
Milestones		572.0d	25-Jun-15	01-Sep-17
Project Milestones		572.0d	25-Jun-15	01-Sep-17
A1000	Notice to Proceed	0.0d	25-Jun-15	
A1010	Construction Start	0.0d	10-Nov-15	
A1030	Final Completion (Contract = 01-SEP-2017)	0.0d		01-Sep-17
Bridge Milestones		267.0d	24-Aug-16	01-Sep-17
A1160	Completion of Phase 1	0.0d		24-Aug-16
A1130	Completion of Phase 2	0.0d		28-Feb-17
A1140	Completion of Phase 3	0.0d		07-Aug-17
A9640	Completion of Phase 4	0.0d		01-Sep-17
Preconstruction		179.0d	25-Jun-15	01-Mar-16
Design		179.0d	25-Jun-15	01-Mar-16
Structures and Bridges		179.0d	25-Jun-15	01-Mar-16
Route 7 Bridge		179.0d	25-Jun-15	01-Mar-16
D1000	Stage I Design (TS&L)	7.0d	25-Jun-15	06-Jul-15
D1010	SFC Stage I Design (VDOT, FHWA, MWAA, Fairfax)	5.0d	07-Jul-15	13-Jul-15
D1020	R/C Stage I Design (VDOT, FHWA, MWAA, Fairfax)	16.0d	14-Jul-15	04-Aug-15
D1030	Stage II Design - Superstructure	65.0d	05-Aug-15	04-Nov-15
D1040	SFC Stage II Design - Superstructure (VDOT, FHWA, MWAA	5.0d	05-Nov-15	11-Nov-15
D1050	R/C Stage II Design - Superstructure (VDOT, FHWA, MWAA,	16.0d	05-Nov-15	27-Nov-15
D1090	Final Stage II Design	43.0d	30-Nov-15	29-Jan-16
D1100	SFC Stage II Design (VDOT, FHWA, MWAA, Fairfax)	5.0d	01-Feb-16	05-Feb-16
D1111	Final Stage II Design (WMATA)	30.0d	01-Feb-16	01-Mar-16
FI/ROW Plans		99.0d	25-Jun-15	10-Nov-15
Traffic		99.0d	25-Jun-15	10-Nov-15
D2400	Prepare Intermediate Traffic Signals, Signing, Pavement Mark	43.0d	25-Jun-15	25-Aug-15
D2410	SFC Intermediate Plans (Wagman)	7.0d	26-Aug-15	03-Sep-15
D2420	A/C Intermediate Plans (Wagman)	5.0d	04-Sep-15	11-Sep-15
D2430	SFC Intermediate Plans (VDOT, FHWA, MWAA, Fairfax)	3.0d	14-Sep-15	16-Sep-15
D2440	R/C Intermediate Plans (VDOT, FHWA, MWAA, Fairfax)	15.0d	17-Sep-15	07-Oct-15
A9180	A/C Intermediate Plans	7.0d	08-Oct-15	16-Oct-15
D2460	R/A Intermediate Plans (VDOT, FHWA, MWAA, Fairfax)	16.0d	19-Oct-15	09-Nov-15
D2470	AFC MOT Plans and Details	1.0d	10-Nov-15	10-Nov-15
Construction		393.0d	02-Mar-16	01-Sep-17
Phase I		126.0d	02-Mar-16	24-Aug-16
Phase 1B		126.0d	02-Mar-16	24-Aug-16
A9400	Pier 2 MOT	2.0d	15-Apr-16	18-Apr-16
Bridge		115.0d	02-Mar-16	09-Aug-16
Piers		67.0d	02-Mar-16	02-Jun-16
A6330	Pier 1 Foundation A	7.0d	02-Mar-16	10-Mar-16
A9240	Pier 1 Foundation B	10.0d	11-Mar-16	24-Mar-16
A9290	Pier 1 Footing B	5.0d	25-Mar-16	31-Mar-16
A9340	FRPS Pier 1B	10.0d	01-Apr-16	14-Apr-16
A6350	SOE Pier 2	7.0d	19-Apr-16	27-Apr-16
A9250	Pier 2 Foundation B	10.0d	28-Apr-16	11-May-16
A9300	Pier 2 Footing B	5.0d	12-May-16	18-May-16
A9370	FRPS Pier 2B	10.0d	19-May-16	02-Jun-16
Superstructure		48.0d	03-Jun-16	09-Aug-16
A6470	Erect Girders	10.0d	03-Jun-16	16-Jun-16
A6480	Install Overhangs	12.0d	10-Jun-16	27-Jun-16

WAGMAN | Page 1 of 3

ABBREVIATIONS
A/C Address Comments — SFA Submit for Approval
R/A Review and Approve — SFC Submit for Comment
R/C Review and Comment — FRPS Form, Rebar, Pour, Strip

Rt. 7 Widening and Bridge Rehab over DTR - | Classic WBS Layout | 06-Mar-15 14:16

Activity ID	Activity Name	Planned Duration	Start	Finish
A6490	SIP Deck Forms	5.0d	28-Jun-16	05-Jul-16
A6500	Deck Rebar	6.0d	06-Jul-16	13-Jul-16
A6510	Pour Deck	5.0d	14-Jul-16	20-Jul-16
A6520	Deck Curing	5.0d	21-Jul-16	27-Jul-16
A9150	Strip Overhangs	7.0d	28-Jul-16	05-Aug-16
A6530	Deck Grooving	2.0d	08-Aug-16	09-Aug-16
Roadway Rt. 7		11.0d	10-Aug-16	24-Aug-16
A9120	Bridge Tie-Ins	8.0d	10-Aug-16	19-Aug-16
A9000	Stripe/Switch Traffic to Phase 2	3.0d	22-Aug-16	24-Aug-16
Phase 2		134.0d	25-Aug-16	28-Feb-17
Bridges		122.0d	25-Aug-16	10-Feb-17
A1440	Remove Exist. Superstr.	15.0d	25-Aug-16	15-Sep-16
Abutments		39.0d	16-Sep-16	09-Nov-16
A6550	SOE Abut. A	5.0d	16-Sep-16	22-Sep-16
A6560	SOE Abut. B	5.0d	16-Sep-16	22-Sep-16
A6570	Rem. Portion of Abut. A	4.0d	23-Sep-16	28-Sep-16
A6580	Rem. Portion of Abut. B	4.0d	23-Sep-16	28-Sep-16
A6590	Drive Pile Abut. A	4.0d	29-Sep-16	04-Oct-16
A6600	Drive Pile Abut. B	4.0d	29-Sep-16	04-Oct-16
A6610	Retaining Wall Structure Abut. A	10.0d	05-Oct-16	19-Oct-16
A6620	Retaining Wall Structure Abut. B	10.0d	05-Oct-16	19-Oct-16
A6630	FRPS Abut. A Footing	5.0d	20-Oct-16	26-Oct-16
A6640	FRPS Abut. B Footing	5.0d	20-Oct-16	26-Oct-16
A6650	FRPS Abut. A Seat	6.0d	27-Oct-16	03-Nov-16
A6660	FRPS Abut. B Seat	6.0d	27-Oct-16	03-Nov-16
A6670	Coping Abut. A	4.0d	04-Nov-16	09-Nov-16
A6680	Coping Abut. B	4.0d	04-Nov-16	09-Nov-16
Superstructure		67.0d	10-Nov-16	10-Feb-17
A6840	Erect Girders	10.0d	10-Nov-16	23-Nov-16
A6850	Install Overhangs	10.0d	17-Nov-16	02-Dec-16
A9670	FRPS Integral Backwall A	8.0d	28-Nov-16	07-Dec-16
A6860	SIP Deck Forms	5.0d	05-Dec-16	09-Dec-16
A6870	Deck Rebar	6.0d	12-Dec-16	19-Dec-16
A9680	FRPS Integral Backwall B	8.0d	08-Dec-16	19-Dec-16
A6880	Pour Deck	5.0d	20-Dec-16	27-Dec-16
A6890	Deck Curing	5.0d	28-Dec-16	05-Jan-17
A6900	FRPS Parapet	7.0d	06-Jan-17	16-Jan-17
A6910	Install Railing	5.0d	17-Jan-17	23-Jan-17
A6920	Install Fence	5.0d	24-Jan-17	30-Jan-17
A9160	Strip Overhangs	7.0d	31-Jan-17	08-Feb-17
A6930	Groove Deck	2.0d	09-Feb-17	10-Feb-17
Roadway Rt. 7 WBL		12.0d	13-Feb-17	28-Feb-17
A9130	Bridge Tie-Ins	8.0d	13-Feb-17	23-Feb-17
A9010	Stripe/Switch Traffic to Phase 3	3.0d	24-Feb-17	28-Feb-17
Phase 3		114.0d	01-Mar-17	07-Aug-17
A9490	Pier 1 MOT	2.0d	15-Mar-17	16-Mar-17
A9510	Pier 3 MOT	2.0d	29-Mar-17	30-Mar-17
A9500	Pier 2 MOT	2.0d	12-Apr-17	13-Apr-17
Bridge		103.0d	01-Mar-17	21-Jul-17
A6940	Remove Exist. Superstr.	15.0d	01-Mar-17	21-Mar-17
Piers		28.0d	17-Mar-17	25-Apr-17

WAGMAN

Page 2 of 3

ABBREVIATIONS

A/C Address Comments
R/A Review and Approve
R/C Review and Comment
S/A Submit for Approval
S/C Submit for Comment
FRPS Form, Rebar, Pour, Strip

Rt. 7 Widening and Bridge Rehab over DTR - | Classic WBS Layout | 06-Mar-15 14:16

Activity ID	Activity Name	Planned Duration	Start	Finish
A7190	Rehab Pier 1	8.0d	17-Mar-17	28-Mar-17
A7210	Rehab Pier 3	8.0d	31-Mar-17	11-Apr-17
A7200	Rehab Pier 2	8.0d	14-Apr-17	25-Apr-17
Superstructure		63.0d	26-Apr-17	21-Jul-17
A7240	Erect Girders	10.0d	26-Apr-17	09-May-17
A7250	Install Overhangs	12.0d	01-May-17	16-May-17
A9690	FRPS Integral Backwall A	8.0d	10-May-17	19-May-17
A7260	SIP Deck Forms	5.0d	17-May-17	23-May-17
A7270	Deck Rebar	6.0d	24-May-17	01-Jun-17
A9700	FRPS Integral Backwall B	8.0d	22-May-17	01-Jun-17
A7280	Pour Deck	5.0d	02-Jun-17	08-Jun-17
A7290	Deck Curing	5.0d	09-Jun-17	15-Jun-17
A7300	FRPS Parapet	6.0d	16-Jun-17	23-Jun-17
A7310	Install Railing	5.0d	26-Jun-17	30-Jun-17
A7320	Install Fence	5.0d	03-Jul-17	10-Jul-17
A9170	Strip Overhangs	7.0d	11-Jul-17	19-Jul-17
A7330	Groove Deck	2.0d	20-Jul-17	21-Jul-17
Roadway Rt. 7 EBL		11.0d	24-Jul-17	07-Aug-17
A9140	Bridge Tie-Ins	8.0d	24-Jul-17	02-Aug-17
A9030	Stripe/Switch Traffic to Phase 4	3.0d	03-Aug-17	07-Aug-17
Phase 4		19.0d	08-Aug-17	01-Sep-17
Bridge		7.0d	08-Aug-17	16-Aug-17
A8710	FPSC Median	7.0d	08-Aug-17	16-Aug-17
Roadway		19.0d	08-Aug-17	01-Sep-17
A9040	Mill/Overlay	3.0d	17-Aug-17	21-Aug-17
A9050	Final Paving	5.0d	22-Aug-17	28-Aug-17
A9060	Final Striping	4.0d	28-Aug-17	01-Sep-17
Sta. 522+00 to 530+99 (West of Bridge)		7.0d	08-Aug-17	16-Aug-17
A8720	FPSC MS-1A	7.0d	08-Aug-17	16-Aug-17
Sta. 535+36 to 547+21 (East of Bridge)		7.0d	08-Aug-17	16-Aug-17
A8730	FPSC MS-2	7.0d	08-Aug-17	16-Aug-17

WAGMAN

Page 3 of 3

ABBREVIATIONS

A/C Address Comments
R/A Review and Approve
R/C Review and Comment
SF/A Submit for Approval
SF/C Submit for Comment
FRPS Form, Rebar, Pour, Strip

Design

The Wagman Team will advance the design from the current RFP documents and incorporate new design elements into final design and construction documents. Design activities will include surveying, roadway design, bridge design, traffic control devices, maintenance of traffic plans, signs, guardrail, pavement markings, drainage design, design of stormwater management facilities, geotechnical investigation including borings and analysis, materials analysis, hydraulic design and pavement design. The project will be delivered by completing three phases of design: preliminary design, right-of-way design, and final design (labeled as Stage 1 and Stage 2 for roadway design, and Final Stage II for structures design). Design-related activities to be performed during each phase are outlined below.

Preliminary design activities will focus on expanding the RFP documents and preparing a set of preliminary plans and reports for submission to VDOT for review and approval. The Wagman Team will perform numerous independent studies of the information contained in the RFP documents to confirm that the information provided to date is correct and suitable for use in designing the project. These additional studies will include performing supplemental field surveying to confirm horizontal and vertical control of key project features verifying type and location of existing subsurface utilities; performing legal research to confirm existing right-of-way and property limits; and performing a thorough geotechnical field investigation to confirm geotechnical conditions for the bridge foundation and roadway design. The findings of these studies will be summarized in a series of reports and, if discrepancies occur between the information in the RFP documents and the Wagman Team studies, these results will be presented to VDOT for review and evaluation as outlined in the Scope Validation process for the project. Preliminary roadway plans will be developed including performing geometric design; preparing cross sections and defining limits of construction; completing stormwater management and erosion and sediment control design; preparing plans for traffic control devices as well as a Transportation Management Plan; and completing the preliminary bridge plans working closely with the geotechnical engineers. Required right-of-way limits will be evaluated and depicted on the plans, and preliminary utility relocation plans will be prepared.

Right-of-way/roadway design submittal will occur after receiving preliminary plan approval from VDOT. The right-of-way, environmental coordination and approval, and utility relocation plan activities will be separated and developed for individual submissions to VDOT and other regulatory agencies for review and approval. The preliminary bridge and roadway plans will be fully detailed and ready for construction.

Final design submittal will occur after receiving right-of-way/roadway design plan approval from VDOT. The Wagman Team will submit the final design plans and reports to VDOT for review and approval.

Environmental Coordination and Approvals

Preliminary environmental activities will begin shortly after receiving Notice to Proceed and will include a thorough environmental evaluation and confirmation of the information provided in the RFP documents. The Wagman Team will prepare a comprehensive environmental management plan that includes a matrix of environmental commitments and compliance requirements; identifies milestone dates and integrates those into the project schedule; identifies the responsible party; and summarizes requirements.

Final environmental activities will begin immediately after receiving preliminary plan approval from VDOT. At this point in the design, the footprint for the project will be firmly established and the Wagman Team will identify the final environmental impacts required to construct the project in its entirety. The Wagman Team will strive to avoid and minimize environmental impacts during design development and construction. A Stormwater Pollution Prevention Plan (SWPPP) will be developed and the registration statement for the Virginia Stormwater Management Permit will be submitted immediately following the SWPPP development.

Right-of-Way

The Wagman Team will evaluate the proposed right-of-way, permanent easements, and temporary easements as shown on the plans. If changes are required, either due to a change in the required right-of-way or a change based on the results of legal research, the Team will prepare updated preliminary right-of-way plans and a right-of-way data sheet and will submit to VDOT for review and approval. Preliminary right-of-way activities will begin after receiving Notice to Proceed. The Wagman Team will begin performing the legal research for the identified parcels on the preliminary plans at the same time that our survey crew is validating the survey information provided in the RFP package.

Schedule & Project Management

The schedule is the most important tool in the construction management process and is an efficient method to communicate the intended sequence and progress of the project to the construction team as well as the project stakeholders. The schedule is an extremely useful and productive planning tool. The Wagman Team takes pride in our detailed advance planning for safe and efficient execution of the work. Our Construction Managers, Superintendents, Safety Professionals, and Craft Supervisors use this critical tool as the first step in developing Activity Hazard Analyses and Activity Work Plans. In addition to early planning, the schedule is used to monitor the project's progress and help identify potential deficiencies and problem areas before they develop into a critical impact.

The project management team will continually review and monitor the schedule and use the information gathered to develop mitigation strategies for any activities that are identified as potential impacts. This pro-active approach will ensure that the project continues to move forward and that any potential delays are addressed immediately. A variety of different tools will be utilized to assist with this process, including but not limited to the following:

- Weekly schedule and task force meetings between the engineering and construction team members during the design phase
- Weekly construction scheduling meetings throughout the duration of the construction process with the construction team (including management)
- Monthly progress meetings to include all project stakeholders, project team members, and subcontractors
- Three-week look ahead schedules
- RFI logs
- Submittal logs
- Work plans
- Subcontract/purchase order logs
- Shop drawing tracking logs
- Weekly manpower and equipment reviews.

All of the above referenced tools will be utilized simultaneously to provide a current and realistic picture of the progress and status at any given time. Information will be presented at meetings to all who are involved for the opportunity to discuss and address any concerns in front of all that are affected. This keeps the line of communication open and allows resolutions and recovery strategies to be developed at an early stage, therefore preventing any further conflict.

Schedule Recovery

Unexpected issues and unforeseen conditions are a possibility during the construction process. The Wagman Team includes many experienced and well-respected members in the DB field with the ability to recognize and react to any issues. The Wagman Team will aggressively manage the project and, if needed, mitigate any issues that affect the construction schedule. If necessary, a schedule recovery strategy will be developed, immediately implemented, and closely monitored until the schedule is recovered.

Subcontractor & Material Supplier Scheduling

Subcontractors & Material Suppliers are a critical part of the project schedule. The Wagman Team will closely evaluate each subcontractor and supplier based on quality, performance, and reputation. Beginning with the initial subcontract paperwork, each subcontractor will be intimately involved with every aspect of the project schedule, and their input will be vital. Suppliers will go through a similar process. This includes progress meetings, weekly look-ahead schedules, material submittals, and recovery strategies if needed. Accountability is the key to effective subcontractor and supplier management, and it will be perfectly clear that subcontractors and suppliers will be held accountable for all aspects of their work from quality to schedule.

4.2.4 Proposal Schedule in electronic format (CD-ROM). In addition to the hard copy located in Volume II, the Wagman Team has provided a copy of the Proposal Schedule and narrative in PDF format as well as a back-up copy of the Proposal Schedule's source document in XER format on a CD-ROM, which is located in the sleeve below.

Appendix

Volume I

4.0.1.1 (Attachment 4.0.1.1)
Letter of Submittal Attachments
Checklist

ATTACHMENT 4.0.1.1

Route 7 Widening and Bridge Rehabilitation over Dulles Toll Road and Airport Access Highway

LETTER OF SUBMITTAL AND ATTACHMENTS CHECKLIST

Offerors shall furnish a copy of this Letter of Submittal Checklist, with the page references added, with the Letter of Submittal.

Technical Proposal Component	Form (if any)	RFP Part 1 Cross Reference	Page Reference
Letter of Submittal and Attachments Checklist	Attachment 4.0.1.1	Section 4.0.1.1	**Volume I Appendix**
Acknowledgement of RFP, Revisions, and/or Addenda	Attachment 3.6 (Form C-78-RFP)	Sections 3.6, 4.0.1.1	**Volume I Appendix**
Letter of Submittal	NA	Sections 4.1	**I-1-2**
Letter of Submittal on Offeror's letterhead	NA	Section 4.1.1	**I-1, I-2**
Offeror's official representative information	NA	Section 4.1.1	**I-1**
Authorized representative's original signature	NA	Section 4.1.1	**I-2**
Declaration of intent	NA	Section 4.1.2	**I-1**
120 day declaration	yes	Section 4.1.3	**I-2**
Point of Contact information	yes	Section 4.1.4	**I-2**
Principal Officer information	NA	Section 4.1.5	**I-2**
Final Completion Date	NA	Section 4.1.6	**I-2**
Proposal Payment Agreement or Waiver of Proposal Payment	Attachment 9.3.1 or 9.3.2	Section 4.1.7	**Volume I Appendix**
Certification Regarding Debarment Forms	Attachment 11.8.6(a) Attachment 11.8.6(b)	Section 4.1.8	**Volume I Appendix**
Written statement that Offeror's proposed concept included in the Attachments to the LOS is fully compliant with the Design Criteria Table and all other requirements of the RFP	NA	Section 4.1.9	**I-2**
Certification that the proposed limits of construction are located within the right-of-way limits shown on RFP plans	NA	Section 4.1.9	**I-2**
Written statement of percent DBE participation	NA	Section 4.1.10	**I-2**

ATTACHMENT 4.0.1.1

Route 7 Widening and Bridge Rehabilitation over Dulles Toll Road and Airport Access Highway

LETTER OF SUBMITTAL AND ATTACHMENTS CHECKLIST

Technical Proposal Component	Form (if any)	RFP Part 1 Cross Reference	Page Reference
Attachments to the Letter of Submittal	NA	Section 4.2	**I-3**
Confirmation that the information provided in the SOQ submittal remains true and accurate or indicates that any requested changes were previously approved by VDOT	NA	Section 4.2.1	**I-3**
Organizational chart with any updates since the SOQ submittal clearly identified	NA	Section 4.2.1	**I-4**
Revised narrative when organizational chart includes updates since the SOQ submittal	NA	Section 4.2.1	**I-3**
Conceptual Roadway Plans – Plan View	NA	Section 4.2.2	**II-1 – II-24**
Conceptual Roadway Plans – Typical Sections	NA	Section 4.2.2	**II-25 – II-27**
Conceptual Structural Plans – Elevation View	NA	Section 4.2.3	**II-28**
Conceptual ~~Roadway~~ Structural Plans – Transverse Section	NA	Section 4.2.3	**II-29 – II-30**
Conceptual ~~Roadway~~ Structural Plans – Abutment Configuration	NA	Section 4.2.3	**II-31 – II-36**
Proposal Schedule	NA	Section 4.2.4	
Proposal Schedule	NA	Section 4.2.4.1	**II-37 – II-46**
Proposal Schedule Narrative	NA	Section 4.2.4.2	**I-7 – I-17**
Proposal Schedule in electronic format (CD-ROM)	NA	Section 4.2.4	**I-17 in CD sleeve**

3.6 (Attachment 3.6)
Acknowledgement of Receipt of RFP,
Revisions, and/or Addenda

Form C-78-RFP

ATTACHMENT 3.6

COMMONWEALTH OF VIRGINIA
DEPARTMENT OF TRANSPORTATION

RFP NO. C00082135DB77

PROJECT NO.: 0007-029-139, P101, R201, C501, B617, B618

ACKNOWLEDGEMENT OF RFP, REVISION AND/OR ADDENDA

Acknowledgement shall be made of receipt of the Request for Proposals (RFP) and/or any and all revisions and/or addenda pertaining to the above designated project which are issued by the Department prior to the Letter of Submittal submission date shown herein. Failure to include this acknowledgement in the Letter of Submittal may result in the rejection of your proposal.

By signing this Attachment 3.6, the Offeror acknowledges receipt of the RFP and/or following revisions and/or addenda to the RFP for the above designated project which were issued under cover letter(s) of the date(s) shown hereon:

1. Cover letter of September 19, 2014 – RFP
   (Date)
2. Cover letter of February 13, 2015 – Addendum #1
   (Date)
3. Cover letter of March 3, 2015 – Addendum #2
   (Date)
4. Cover letter of March 5, 2015 – Addendum #3
   (Date)

David W. Lyle
SIGNATURE

March 9, 2015
DATE

David W. Lyle
PRINTED NAME

Vice President & Division Manager
TITLE

4.1.7 (Attachment 9.3.1)
Proposal Payment Agreement

ATTACHMENT 9.3.1
PROPOSAL PAYMENT AGREEMENT

THIS PROPOSAL PAYMENT AGREEMENT (this "Agreement") is made and entered into as of this 9th day of March, 2015, by and between the Virginia Department of Transportation ("VDOT"), and G.A. & F.C. Wagman, Inc. ("Offeror").

WITNESSETH:

WHEREAS, Offeror is one of the entities who submitted Statements of Qualifications ("SOQs") pursuant to VDOT's **May 13, 2014** Request for Qualifications ("RFQ") and was invited to submit proposals in response to a Request for Proposals ("RFP") for the **Route 7 Widening and Bridge Rehabilitation over Dulles Toll Road and Airport Access Highway, Project No. 0007-029-139, P101, R201, C501, B617, B618** ("Project"), under a design-build contract with VDOT ("Design-Build Contract"); and

WHEREAS, as part of the procurement process for the Project, Offeror has already provided and/or furnished to VDOT, and may continue to provide and/or furnish to VDOT, certain intellectual property, materials, information and ideas, including, but not limited to, such matters that are: (a) conveyed verbally and in writing during proprietary meetings or interviews; and (b) contained in, related to or associated with Offeror's proposal, including, but not limited to, written correspondence, designs, drawings, plans, exhibits, photographs, reports, printed material, tapes, electronic disks, or other graphic and visual aids (collectively "Offeror's Intellectual Property"); and

WHEREAS, VDOT is willing to provide a payment to Offeror, subject to the express conditions stated in this Agreement, to obtain certain rights in Offeror's Intellectual Property, provided that Offeror submits a proposal that VDOT determines to be responsive to the RFP ("Offeror's Proposal"), and either (a) Offeror is not awarded the Design-Build Contract; or (b) VDOT cancels the procurement or decides not to award the Design-Build Contract to any Offeror; and

WHEREAS, Offeror wishes to receive the payment offered by VDOT, in exchange for granting VDOT the rights set forth in this Agreement.

NOW, THEREFORE, in consideration of the mutual covenants and agreements set forth in this Agreement and other good and valuable consideration, the receipt and adequacy of which are acknowledged by the parties, the parties agree as follows:

1. <u>VDOT's Rights in Offeror's Intellectual Property</u>. Offeror hereby conveys to VDOT all rights, title and interest, free and clear of all liens, claims and encumbrances, in Offeror's Intellectual Property, which includes, without restriction or limitation, the right of VDOT, and anyone contracting with VDOT, to incorporate any ideas or information from Offeror's Intellectual Property into: (a) the Design-Build Contract and the Project; (b) any other contract awarded in reference to the Project; or (c) any subsequent procurement by VDOT. In receiving all rights, title and interest in Offeror's Intellectual Property, VDOT is deemed to own all intellectual property rights, copyrights, patents, trade secrets, trademarks, and service marks in Offeror's Intellectual Property, and Offeror agrees that it shall, at the request of VDOT, execute all papers and perform all other acts that may be necessary to ensure that VDOT's rights, title and interest in Offeror's Intellectual Property are protected. The rights conferred herein to VDOT include, without limitation, VDOT's ability to use Offeror's Intellectual Property without the obligation to notify or seek permission from Offeror.

2. <u>Exclusions from Offeror's Intellectual Property</u>. Notwithstanding Section 1 above, it is understood and agreed that Offeror's Intellectual Property is not intended to include, and Offeror does not convey any rights to, the Escrow Proposal Documents submitted by Offeror in accordance with the RFP.

3. <u>Proposal Payment</u>. VDOT agrees to pay Offeror the lump sum amount of **[*written number*] and 00/100 Dollars ($[*numerical*].00)** ("Proposal Payment"), which payment constitutes payment in full to Offeror for the conveyance of Offeror's Intellectual Property to VDOT in accordance with this Agreement. Payment of the Proposal Payment is conditioned upon: (a) Offeror's Proposal being, in the sole discretion of VDOT, responsive to the RFP; (b) Offeror complying with all other terms and conditions of this Agreement; and (c) either (i) Offeror is not awarded the Design-Build Contract, or (ii) VDOT cancels the procurement or decides not to award the Design-Build Contract to any Offeror.

4. <u>Payment Due Date</u>. Subject to the conditions set forth in this Agreement, VDOT will make payment of the Proposal Payment to the Offeror within forty-five (45) days after the later of: (a) notice from VDOT that it has awarded the Design-Build Contract to another Offeror; or (b) notice from VDOT that the procurement for the Project has been cancelled and that there will be no Contract Award.

5. <u>Effective Date of this Agreement</u>. The rights and obligations of VDOT and Offeror under this Agreement, including VDOT's ownership rights in Offeror's Intellectual Property, vests upon the date that Offeror's Proposal is submitted to VDOT. Notwithstanding the above, if Offeror's Proposal is determined by VDOT, in its sole discretion, to be nonresponsive to the RFP, then Offeror is deemed to have waived its right to obtain the Proposal Payment, and VDOT shall have no obligations under this Agreement.

6. Indemnity. Subject to the limitation contained below, Offeror shall, at its own expense, indemnify, protect and hold harmless VDOT and its agents, directors, officers, employees, representatives and contractors from all claims, costs, expenses, liabilities, demands, or suits at law or equity ("Claims") of, by or in favor of or awarded to any third party arising in whole or in part from: (a) the negligence or wilful misconduct of Offeror or any of its agents, officers, employees, representatives or subcontractors; or (b) breach of any of Offeror's obligations under this Agreement, including its representation and warranty under Section 8 hereof. This indemnity shall not apply with respect to any Claims caused by or resulting from the sole negligence or wilful misconduct of VDOT, or its agents, directors, officers, employees, representatives or contractors.

7. Assignment. Offeror shall not assign this Agreement, without VDOT's prior written consent, which consent may be given or withheld in VDOT's sole discretion. Any assignment of this Agreement without such consent shall be null and void.

8. Authority to Enter into this Agreement. By executing this Agreement, Offeror specifically represents and warrants that it has the authority to convey to VDOT all rights, title, and interest in Offeror's Intellectual Property, including, but not limited to, those any rights that might have been vested in team members, subcontractors, consultants or anyone else who may have contributed to the development of Offeror's Intellectual Property, free and clear of all liens, claims and encumbrances.

9. Miscellaneous.

a. Offeror and VDOT agree that Offeror, its team members, and their respective employees are not agents of VDOT as a result of this Agreement.

b. Any capitalized term used herein but not otherwise defined shall have the meanings set forth in the RFP.

c. This Agreement, together with the RFP, embodies the entire agreement of the parties with respect to the subject matter hereof. There are no promises, terms, conditions, or obligations other than those contained herein or in the RFP, and this Agreement shall supersede all previous communications, representations, or agreements, either verbal or written, between the parties hereto.

d. It is understood and agreed by the parties hereto that if any part, term, or provision of this Agreement is by the courts held to be illegal or in conflict with any law of the Commonwealth of Virginia, validity of the remaining portions or provisions shall not be affected, and the rights and obligations of the parties shall be construed and enforced as if the Agreement did not contain the particular part, term, or provisions to be invalid.

e. This Agreement shall be governed by and construed in accordance with the laws of the Commonwealth of Virginia.

IN WITNESS WHEREOF, this Agreement has been executed and delivered as of the day and year first above written.

VIRGINIA DEPARTMENT OF TRANSPORTATION

By: _____

Name: _____

Title: _____

[Insert Offeror's Name]

By: **G.A. & F.C. Wagman, Inc.**

Name: David W. Lyle

Title: Vice President & Division Manager

4.1.8 (Attachments 11.8.6(a) & (b))
Certification Regarding Debarment
Forms

ATTACHMENT NO. 11.8.6(a)

CERTIFICATION REGARDING DEBARMENT
PRIMARY COVERED TRANSACTIONS

Project: 0007-029-139, P101, R201, C501, B617, B618
Contract ID: C00082135DB77

1) The prospective primary participant certifies to the best of its knowledge and belief, that it and its principals:

a) Are not presently debarred, suspended, proposed for debarment, declared ineligible, or voluntarily excluded from covered transactions by any Federal department or agency.

b) Have not within a three-year period preceding this proposal been convicted of or had a civil judgment rendered against them for commission of fraud or a criminal offense in connection with obtaining, attempting to obtain, or performing a public (Federal, State or local) transaction or contract under a public transaction; and have not been convicted of any violations of Federal or State antitrust statutes or commission of embezzlement, theft, forgery, bribery, falsification, or destruction of records, making false statements, or receiving stolen property;

c) Are not presently indicted for or otherwise criminally or civilly charged by a governmental entity (Federal, State or local) with commission of any of the offenses enumerated in paragraph 1) b) of this certification; and

d) Have not within a three-year period preceding this application/proposal had one or more public transactions (Federal, State or local) terminated for cause or default.

2) Where the prospective primary participant is unable to certify to any of the statements in this certification, such prospective participant shall attach an explanation to this form.

The undersigned makes the foregoing statements to be filed with the proposal submitted on behalf of the Offeror for contracts to be let by the Commonwealth Transportation Board.

D. W. Fyle	3/9/2015	Vice President & Division Manager
Signature	Date	Title

G.A. & F.C. Wagman, Inc.
Name of Firm

ATTACHMENT NO. 11.8.6(b)

CERTIFICATION REGARDING DEBARMENT
LOWER TIER COVERED TRANSACTIONS

Project: 0007-029-139, P101, R201, C501, B617, B618
Contract ID: C00082135DB77

1) The prospective lower tier participant certifies, by submission of this proposal, that neither it nor its principals is presently debarred, suspended, proposed for debarment, declared ineligible, or voluntarily excluded from participation in this transaction by any Federal department or agency.

2) Where the prospective lower tier participant is unable to certify to any of the statements in this certification, such prospective participant shall attach an explanation to this form.

The undersigned makes the foregoing statements to be filed with the proposal submitted on behalf of the Offeror for contracts to be let by the Commonwealth Transportation Board.

	3/6/2015	Director of Business Development/ Principal
Signature	Date	Title

Rinker Design Associates, P.C.
Name of Firm

ATTACHMENT NO. 11.8.6(b)

CERTIFICATION REGARDING DEBARMENT
LOWER TIER COVERED TRANSACTIONS

Project: 0007-029-139, P101, R201, C501, B617, B618
Contract ID: C00082135DB77

1) The prospective lower tier participant certifies, by submission of this proposal, that neither it nor its principals is presently debarred, suspended, proposed for debarment, declared ineligible, or voluntarily excluded from participation in this transaction by any Federal department or agency.

2) Where the prospective lower tier participant is unable to certify to any of the statements in this certification, such prospective participant shall attach an explanation to this form.

The undersigned makes the foregoing statements to be filed with the proposal submitted on behalf of the Offeror for contracts to be let by the Commonwealth Transportation Board.

Elizabeth Quinn — March 2, 2015 — President
Signature — Date — Title

Quinn Consulting Services, Inc.
Name of Firm

ATTACHMENT NO. 11.8.6(b)

CERTIFICATION REGARDING DEBARMENT
LOWER TIER COVERED TRANSACTIONS

Project: 0007-029-139, P101, R201, C501, B617, B618
Contract ID: C00082135DB77

1) The prospective lower tier participant certifies, by submission of this proposal, that neither it nor its principals is presently debarred, suspended, proposed for debarment, declared ineligible, or voluntarily excluded from participation in this transaction by any Federal department or agency.

2) Where the prospective lower tier participant is unable to certify to any of the statements in this certification, such prospective participant shall attach an explanation to this form.

The undersigned makes the foregoing statements to be filed with the proposal submitted on behalf of the Offeror for contracts to be let by the Commonwealth Transportation Board.

	March 4, 2015	President
Signature	Date	Title

Specialized Engineering

Name of Firm

ATTACHMENT NO. 11.8.6(b)

CERTIFICATION REGARDING DEBARMENT
LOWER TIER COVERED TRANSACTIONS

Project: 0007-029-139, P101, R201, C501, B617, B618
Contract ID: C00082135DB77

1) The prospective lower tier participant certifies, by submission of this proposal, that neither it nor its principals is presently debarred, suspended, proposed for debarment, declared ineligible, or voluntarily excluded from participation in this transaction by any Federal department or agency.

2) Where the prospective lower tier participant is unable to certify to any of the statements in this certification, such prospective participant shall attach an explanation to this form.

The undersigned makes the foregoing statements to be filed with the proposal submitted on behalf of the Offeror for contracts to be let by the Commonwealth Transportation Board.

Signature	3/3/2015 Date	Vice President, Design Build Services Title

Branch Highways, Inc.
Name of Firm

ATTACHMENT NO. 11.8.6(b)

CERTIFICATION REGARDING DEBARMENT
LOWER TIER COVERED TRANSACTIONS

Project: 0007-029-139, P101, R201, C501, B617, B618
Contract ID: C00082135DB77

1) The prospective lower tier participant certifies, by submission of this proposal, that neither it nor its principals is presently debarred, suspended, proposed for debarment, declared ineligible, or voluntarily excluded from participation in this transaction by any Federal department or agency.

2) Where the prospective lower tier participant is unable to certify to any of the statements in this certification, such prospective participant shall attach an explanation to this form.

The undersigned makes the foregoing statements to be filed with the proposal submitted on behalf of the Offeror for contracts to be let by the Commonwealth Transportation Board.

	3/2/15	PARTNER
Signature	Date	Title

WHITMAN, REQUARDT AND ASSOCIATES, LLP
Name of Firm

ATTACHMENT NO. 11.8.6(b)

CERTIFICATION REGARDING DEBARMENT
LOWER TIER COVERED TRANSACTIONS

Project: 0007-029-139, P101, R201, C501, B617, B618 ,
Contract ID: C00082135DB77

1) The prospective lower tier participant certifies, by submission of this proposal, that neither it nor its principals is presently debarred, suspended, proposed for debarment, declared ineligible, or voluntarily excluded from participation in this transaction by any Federal department or agency.

2) Where the prospective lower tier participant is unable to certify to any of the statements in this certification, such prospective participant shall attach an explanation to this form.

The undersigned makes the foregoing statements to be filed with the proposal submitted on behalf of the Offeror for contracts to be let by the Commonwealth Transportation Board.

	3/2/2015	Vice President
Signature	Date	Title

DMY Engineering Consultants Inc.
Name of Firm

ATTACHMENT NO. 11.8.6(b)

CERTIFICATION REGARDING DEBARMENT
LOWER TIER COVERED TRANSACTIONS

Project: 0007-029-139, P101, R201, C501, B617, B618
Contract ID: C00082135DB77

1) The prospective lower tier participant certifies, by submission of this proposal, that neither it nor its principals is presently debarred, suspended, proposed for debarment, declared ineligible, or voluntarily excluded from participation in this transaction by any Federal department or agency.

2) Where the prospective lower tier participant is unable to certify to any of the statements in this certification, such prospective participant shall attach an explanation to this form.

The undersigned makes the foregoing statements to be filed with the proposal submitted on behalf of the Offeror for contracts to be let by the Commonwealth Transportation Board.

James C. Wiggans 3/3/2015 Chief Executive Officer
Signature Date Title

McCormick Taylor, Inc.
Name of Firm

Wagman Personnel Change Approval by VDOT

COMMONWEALTH of VIRGINIA

DEPARTMENT OF TRANSPORTATION
1401 EAST BROAD STREET
RICHMOND, VIRGINIA 23219 2000

Charles A. Kilpatrick, P.E.
Commissioner

March 5, 2015

Mr. David Lyle
G.A. & F.C. Wagman, Inc.
Virginia Operations
26000 Simpson Road
North Dinwiddie, VA 23803

Subject: Route 7 Widening and Bridge Reconstruction over Dulles Road and Airport Access Highway Project
Request for Key Personnel Change – Construction Manager

Mr. Lyle:

Thank you for your team's letter, dated February 23, 2015, requesting a change in the Key Personnel for the project referenced above, and providing information regarding your request to change your team's Construction Manager. Your letter specifically mentions that Mr. Michael Mansfield, P.E. was listed as a Construction Manager on another project pursuit which was successfully procured by G.A. & F.C. Wagman, Inc. in the previous month. G.A. & F.C. Wagman, Inc. was in pursuit of that project since the summer of 2014 and received notice of award in January 2015.

After careful consideration of the information provided by G.A. & F.C. Wagman, Inc. and in accordance with Section 7.1.15 and Section 11.1 of the RFP which allows VDOT to approve a change in the Key Personnel under extraordinary circumstances, VDOT has determined it will grant the substitution of Mr. David Leber for Mr. Michael Mansfield, P.E. as the proposed Construction Manager for your team.

Sincerely,

Stephen D. Kindy

Stephen D. Kindy, P.E.
Senior Project Delivery Engineer

ELECTRONIC COPY

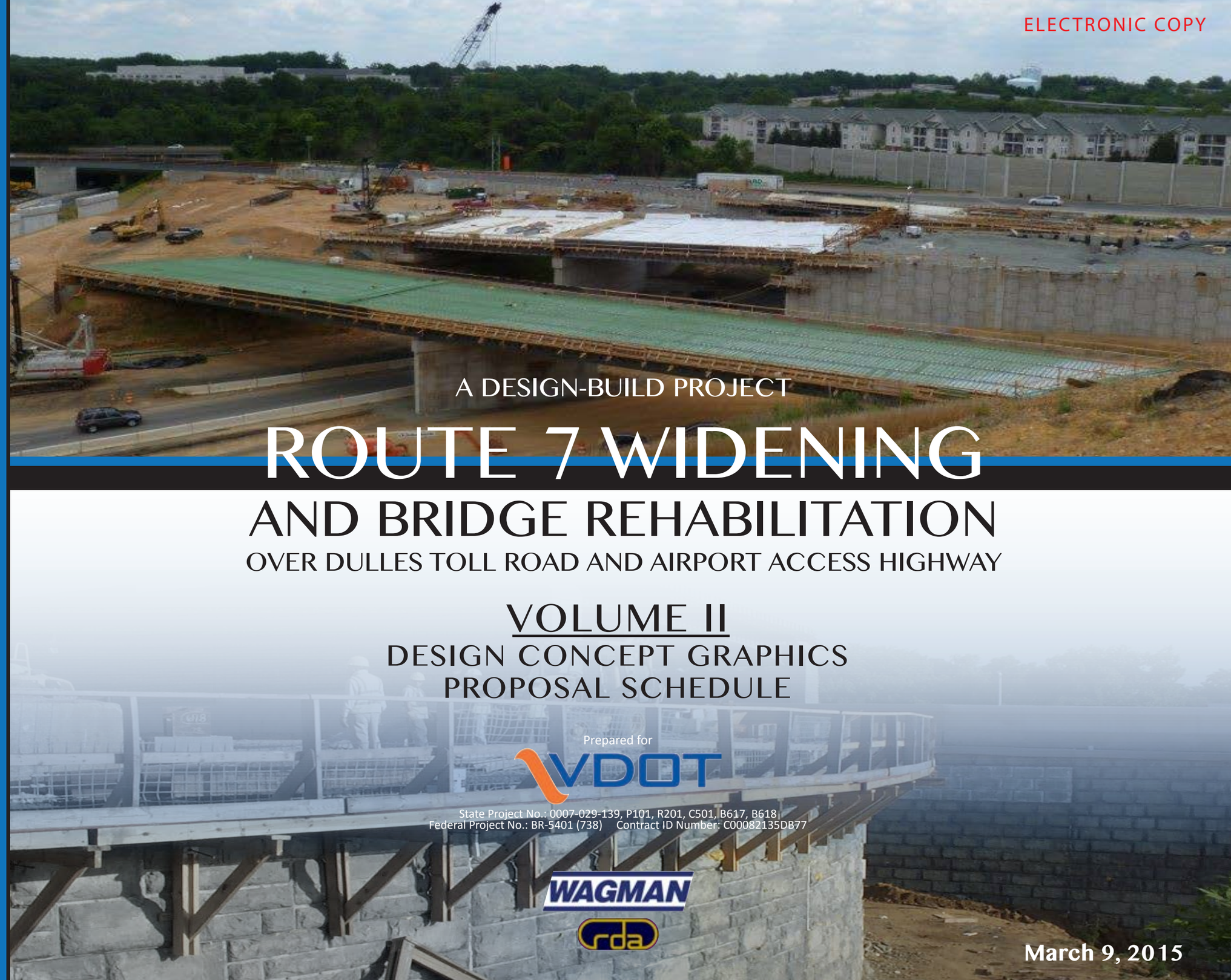

A DESIGN-BUILD PROJECT

ROUTE 7 WIDENING

AND BRIDGE REHABILITATION

OVER DULLES TOLL ROAD AND AIRPORT ACCESS HIGHWAY

VOLUME II

DESIGN CONCEPT GRAPHICS
PROPOSAL SCHEDULE

Prepared for

VDOT

State Project No.: 0007-029-139, P101, R201, C501, B617, B618
Federal Project No.: BR-5401 (738) Contract ID Number: C00082135DB77

WAGMAN

rda

March 9, 2015

4.2.2 Conceptual Roadway Plans

Volume II

N:\Richmond Marketing\2014\14076-Route 7 over Dulles Toll Road DB\RDA Design\Letter of Submittal Plans\B82135003.dgn
10:29:35 PM

CONCEPT PLAN

PROJECT MANAGER Arthur Bateman, PE (703) 259-1940 (Nova District)
SURVEYED BY, DATE Woolpert, Inc.; February 6, 2013
DESIGN BY Binker Design Associates
SUBSURFACE UTILITY BY, DATE Woolpert, Inc.; January 22, 2013

REVISED	STATE	ROUTE	PROJECT	SHEET NO.
	VA.	7	0007-029-139, C501, R201, P101	3

DESIGN FEATURES RELATING TO CONSTRUCTION OR TO REGULATION AND CONTROL OF TRAFFIC MAY BE SUBJECT TO CHANGE AS DEEMED NECESSARY BY THE DEPARTMENT

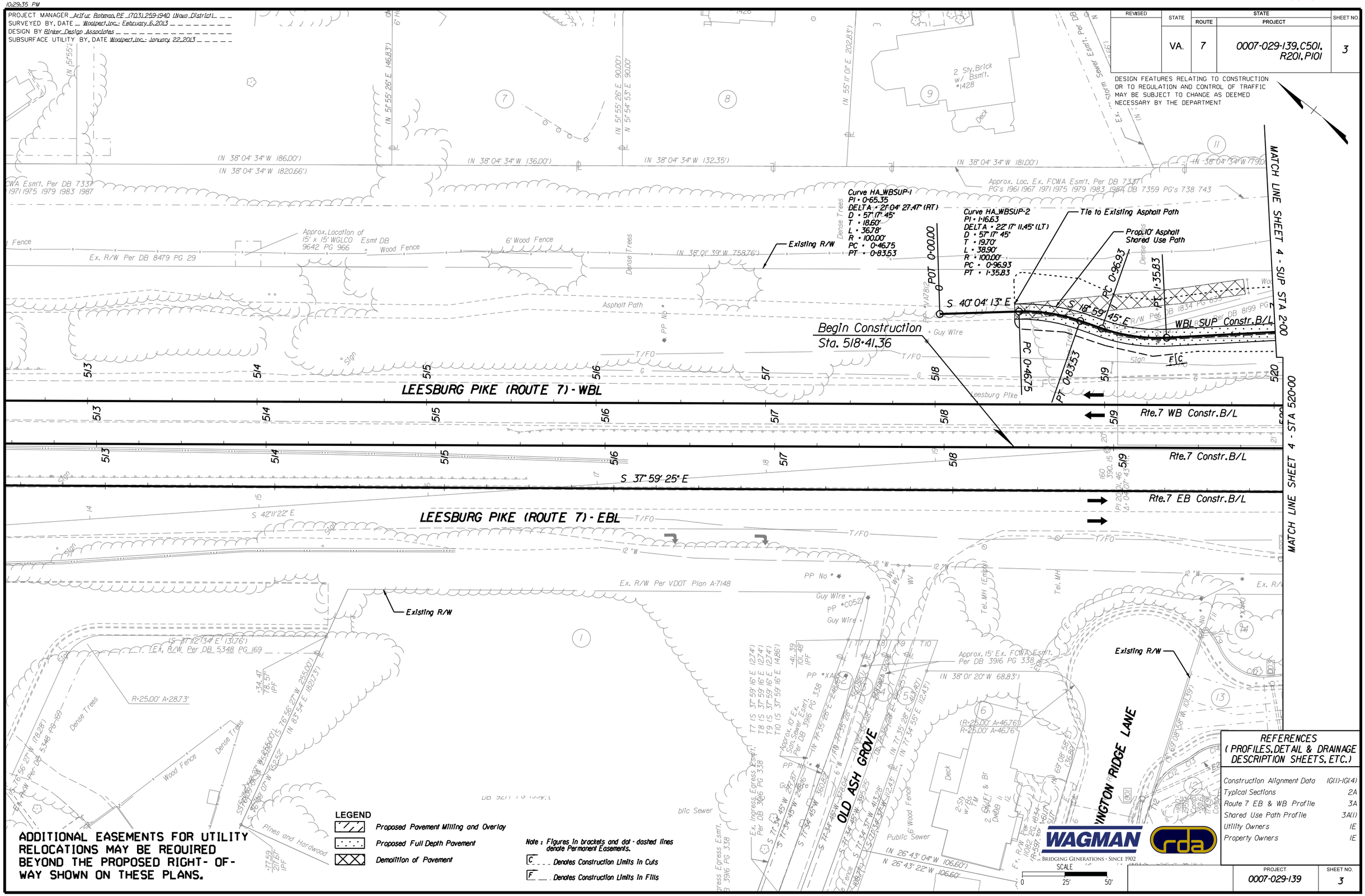

ADDITIONAL EASEMENTS FOR UTILITY RELOCATIONS MAY BE REQUIRED BEYOND THE PROPOSED RIGHT-OF-WAY SHOWN ON THESE PLANS.

3/4/2015

REFERENCES
(PROFILES, DETAIL & DRAINAGE DESCRIPTION SHEETS, ETC.)

Construction Alignment Data	IG(1)-IG(4)
Typical Sections	2A
Route 7 EB & WB Profile	3A
Shared Use Path Profile	3A(1)
Utility Owners	1E
Property Owners	1E

WAGMAN — BRIDGING GENERATIONS · SINCE 1902
rda

PROJECT	SHEET NO.
0007-029-139	3

N:\Richmond Marketing\2014\14076-Route 7 over Dulles Toll Road DB\RDA Design\Letter of Submittal Plans\d82135003A.dgn
10:29:37 PM

CONCEPT PLAN

PROJECT MANAGER Arthur Bateman, PE (703) 259-1940 (Nova District)
SURVEYED BY, DATE Woolpert Inc. February 6, 2013
DESIGN BY Rinker Design Associates
SUBSURFACE UTILITY BY, DATE Woolpert Inc. January 22, 2013

REVISED	STATE	STATE ROUTE	STATE PROJECT	SHEET NO.
	VA.	7	0007-029-139, C501, R201, P101	3A

DESIGN FEATURES RELATING TO CONSTRUCTION OR TO REGULATION AND CONTROL OF TRAFFIC MAY BE SUBJECT TO CHANGE AS DEEMED NECESSARY BY THE DEPARTMENT

Rinker Design Associates, P.C.
Glen Allen, Virginia
Civil Engineer

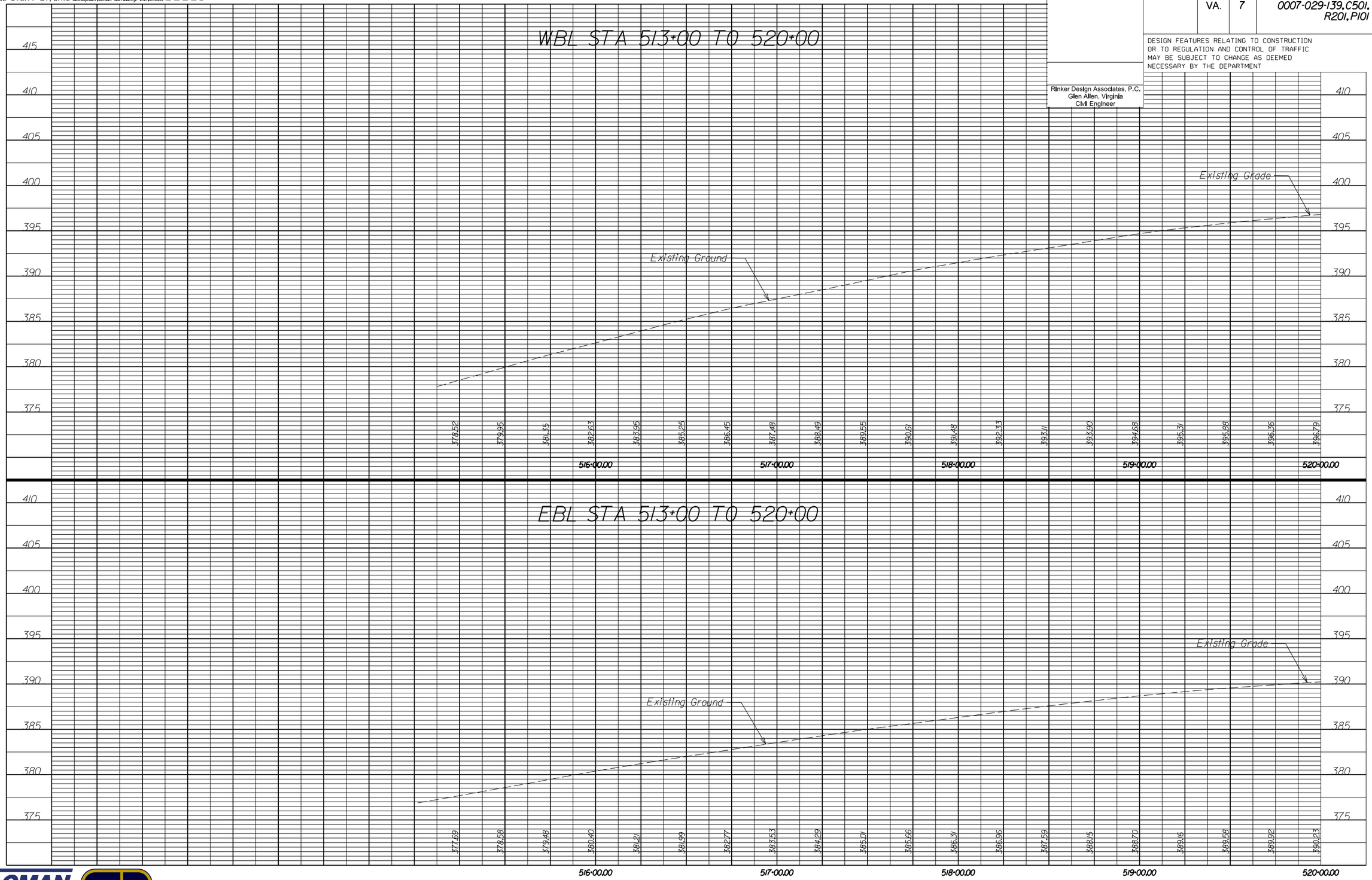

SCALE 0 25' 50'

PROJECT 0007-029-139 | SHEET NO. 3A

3/4/2015

WAGMAN
Bridging Generations · Since 1902

rda

N:\Richmond Marketing\2014\14076-Route 7 over Dulles Toll Road DB\RDA Design\Letter of Submittal Plans\d82135003A(1).dgn
10:29:38 PM

CONCEPT PLAN

PROJECT MANAGER Arthur Bateman, PE (703) 259-1940 (Nova District)
SURVEYED BY, DATE Woolpert, Inc., February 6, 2013
DESIGN BY Rinker Design Associates
SUBSURFACE UTILITY BY, DATE Woolpert, Inc., January 22, 2013

REVISED	STATE	STATE ROUTE	STATE PROJECT	SHEET NO.
	VA.	7	0007-029-139, C501, R201, P101	3A(1)

DESIGN FEATURES RELATING TO CONSTRUCTION OR TO REGULATION AND CONTROL OF TRAFFIC MAY BE SUBJECT TO CHANGE AS DEEMED NECESSARY BY THE DEPARTMENT

Rinker Design Associates, P.C.
Glen Allen, Virginia
Civil Engineer

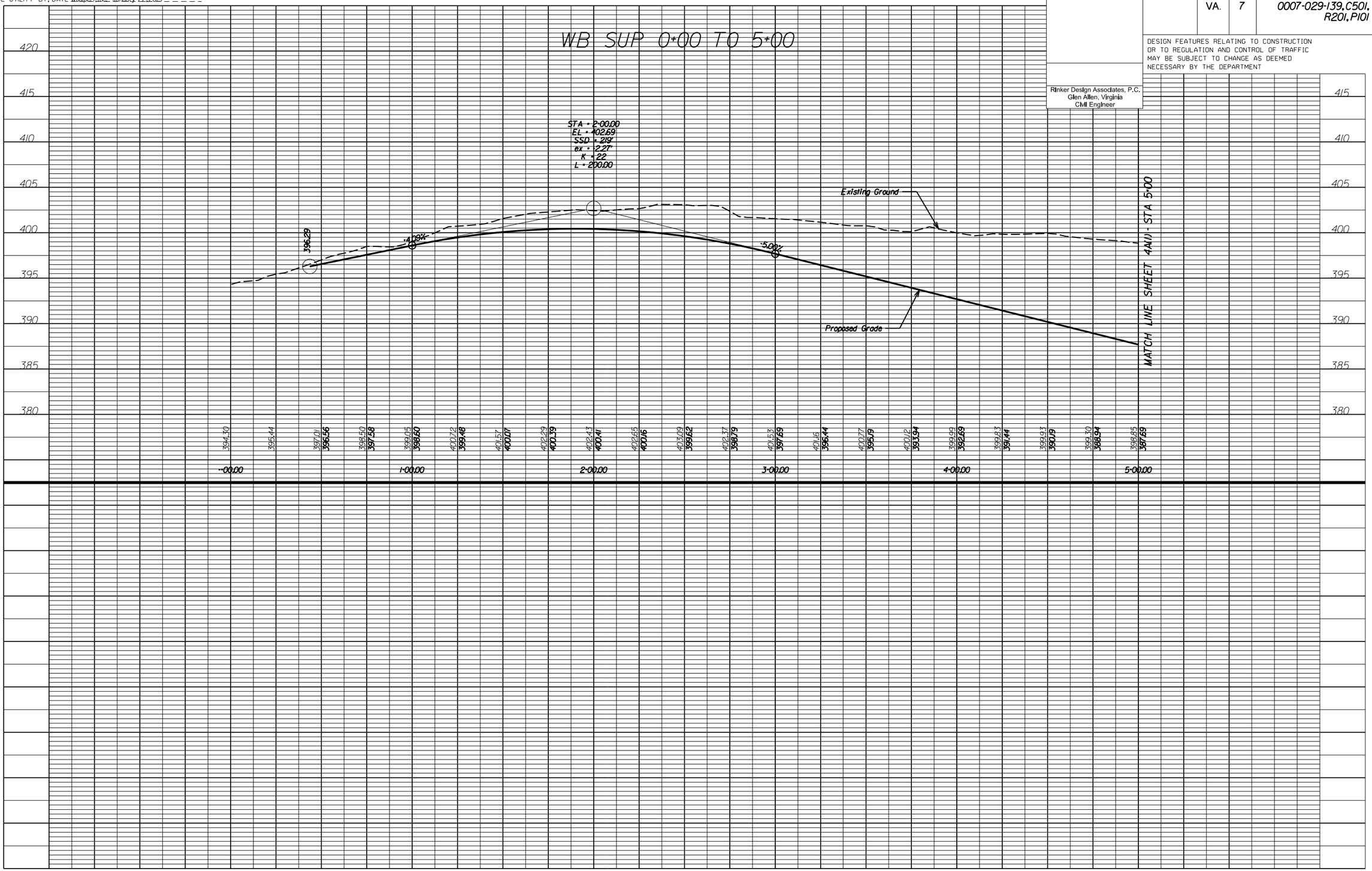

WAGMAN
BRIDGING GENERATIONS · SINCE 1902
rda

SCALE 0 25' 50'

PROJECT	SHEET NO.
0007-029-139	3A(1)

3/4/2015

CONCEPT PLAN

PROJECT MANAGER Arthur Bateman, PE (703) 259-1940 (Nova District)
SURVEYED BY, DATE Woolpert, Inc.: February 6, 2013
DESIGN BY Binker Design Associates
SUBSURFACE UTILITY BY, DATE Woolpert, Inc.: January 22, 2013

REVISED	STATE	STATE ROUTE	STATE PROJECT	SHEET NO.
	VA.	7	0007-029-139, C501, R201, P101	4

DESIGN FEATURES RELATING TO CONSTRUCTION OR TO REGULATION AND CONTROL OF TRAFFIC MAY BE SUBJECT TO CHANGE AS DEEMED NECESSARY BY THE DEPARTMENT

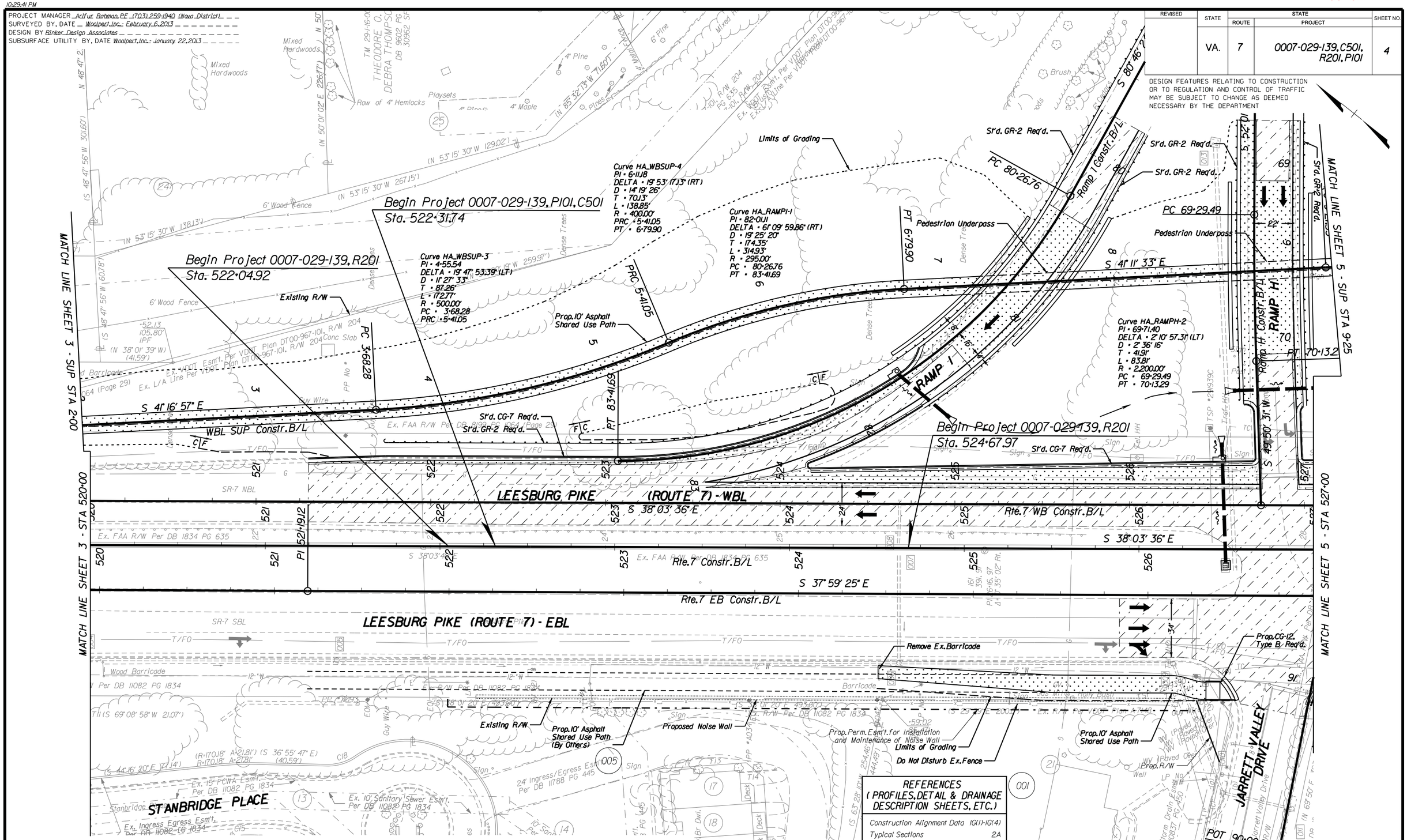

ADDITIONAL EASEMENTS FOR UTILITY RELOCATIONS MAY BE REQUIRED BEYOND THE PROPOSED RIGHT-OF-WAY SHOWN ON THESE PLANS.

LEGEND

- Proposed Pavement Milling and Overlay
- Proposed Full Depth Pavement
- Demolition of Pavement

Note: Figures in brackets and dot-dashed lines denote Permanent Easements.

C ___ Denotes Construction Limits in Cuts

F ___ Denotes Construction Limits in Fills

REFERENCES
(PROFILES, DETAIL & DRAINAGE DESCRIPTION SHEETS, ETC.)

Construction Alignment Data	IG(1)-IG(4)
Typical Sections	2A
Route 7 EB & WB Profile	4A
Shared Use Path Profiles	4A(1)
Ramp Profiles	4A(2)
Utility Owners	IE
Property Owners	IE

WAGMAN
BRIDGING GENERATIONS · SINCE 1902
rda

PROJECT	SHEET NO.
0007-029-139	4

3/4/2015

N:\Richmond Marketing\2014\14076-Route 7 over Dulles Toll Road DB\RDA Design\Letter of Submittal Plans\d82135004A.dgn
10:29:43 PM

CONCEPT PLAN

PROJECT MANAGER Arthur Bateman, PE (703) 259-1940 (Nova District)
SURVEYED BY, DATE Woolpert Inc. February 6, 2013
DESIGN BY Rinker Design Associates
SUBSURFACE UTILITY BY, DATE Woolpert Inc. January 22, 2013

REVISED	STATE	STATE ROUTE	STATE PROJECT	SHEET NO.
	VA.	7	0007-029-139, C501, R201, P101	4A

DESIGN FEATURES RELATING TO CONSTRUCTION OR TO REGULATION AND CONTROL OF TRAFFIC MAY BE SUBJECT TO CHANGE AS DEEMED NECESSARY BY THE DEPARTMENT

Rinker Design Associates, P.C.
Glen Allen, Virginia
Civil Engineer

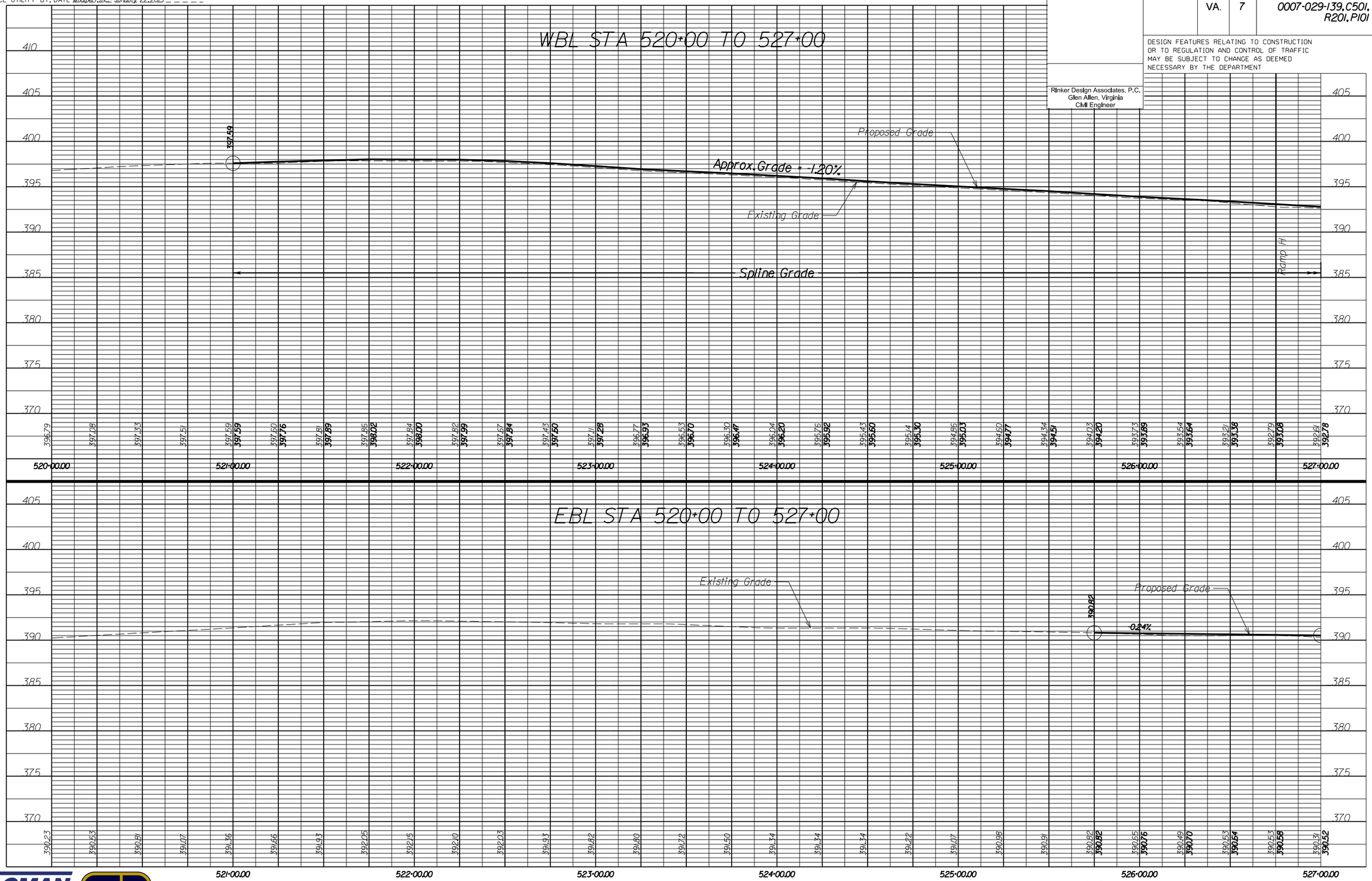

SCALE 0 25' 50'

PROJECT	SHEET NO.
0007-029-139	4A

3/4/2015

WAGMAN
BRIDGING GENERATIONS · SINCE 1902

rda

CONCEPT PLAN

PROJECT MANAGER Arthur Bateman, PE (703) 259-1940 (Nova District)
SURVEYED BY, DATE Woolpert, Inc., February 6, 2013
DESIGN BY Rinker Design Associates
SUBSURFACE UTILITY BY, DATE Woolpert, Inc., January 22, 2013

REVISED	STATE	STATE ROUTE	STATE PROJECT	SHEET NO.
	VA.	7	0007-029-139, C501, R201, P101	4A(1)

DESIGN FEATURES RELATING TO CONSTRUCTION OR TO REGULATION AND CONTROL OF TRAFFIC MAY BE SUBJECT TO CHANGE AS DEEMED NECESSARY BY THE DEPARTMENT

Rinker Design Associates, P.C.
Glen Allen, Virginia
Civil Engineer

3/4/2015

WAGMAN
BRIDGING GENERATIONS · SINCE 1902

rda

SCALE
0 25' 50'

PROJECT	SHEET NO.
0007-029-139	4A(1)

N:\Richmond Marketing\2014\14076-Route 7 over Dulles Toll Road DB\RDA Design\Letter of Submittal Plans\d82\350044(2).dgn
10:29:44 PM

CONCEPT PLAN

PROJECT MANAGER Arthur Batman, PE (703) 259-1940 (Nova District)
SURVEYED BY, DATE Woolpert Inc. February 6, 2013
DESIGN BY Rinker Design Associates
SUBSURFACE UTILITY BY, DATE Woolpert Inc. January 22, 2013

REVISED	STATE	STATE ROUTE	STATE PROJECT	SHEET NO.
	VA.	7	0007-029-139, C501, R201, P101	4A(2)

DESIGN FEATURES RELATING TO CONSTRUCTION OR TO REGULATION AND CONTROL OF TRAFFIC MAY BE SUBJECT TO CHANGE AS DEEMED NECESSARY BY THE DEPARTMENT

Rinker Design Associates, P.C.
Glen Allen, Virginia
Civil Engineer

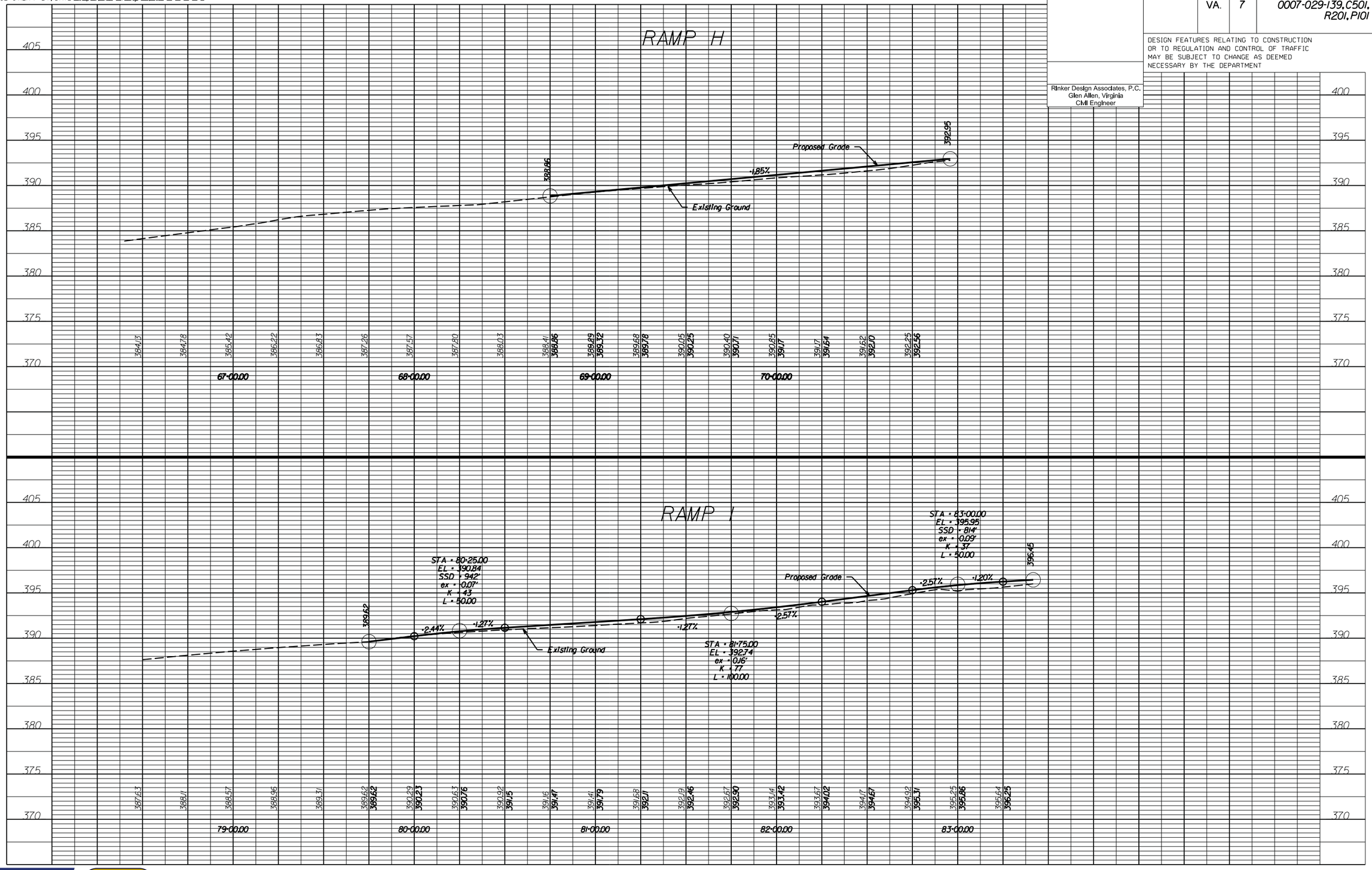

SCALE
0 25' 50'

PROJECT	SHEET NO.
0007-029-139	4A(2)

3/4/2015

WAGMAN
BRIDGING GENERATIONS · SINCE 1902

rda

CONCEPT PLAN

PROJECT MANAGER Arthur Rotman, PE (703) 259-1940 (Nova District)
SURVEYED BY, DATE Woolpert, Inc. February 6, 2013
DESIGN BY Parsons Brinckerhoff, Inc.
SUBSURFACE UTILITY BY, DATE Woolpert, Inc. January 22, 2013

THESE PLANS ARE UNFINISHED AND UNAPPROVED AND ARE NOT TO BE USED FOR ANY TYPE OF CONSTRUCTION OR THE ACQUISITION OF RIGHT OF WAY.

REVISED	STATE	ROUTE	PROJECT	SHEET NO.
	VA.	7	0007-029-139, C501, B617, B618, R201, P101	5

DESIGN FEATURES RELATING TO CONSTRUCTION OR TO REGULATION AND CONTROL OF TRAFFIC MAY BE SUBJECT TO CHANGE AS DEEMED NECESSARY BY THE DEPARTMENT

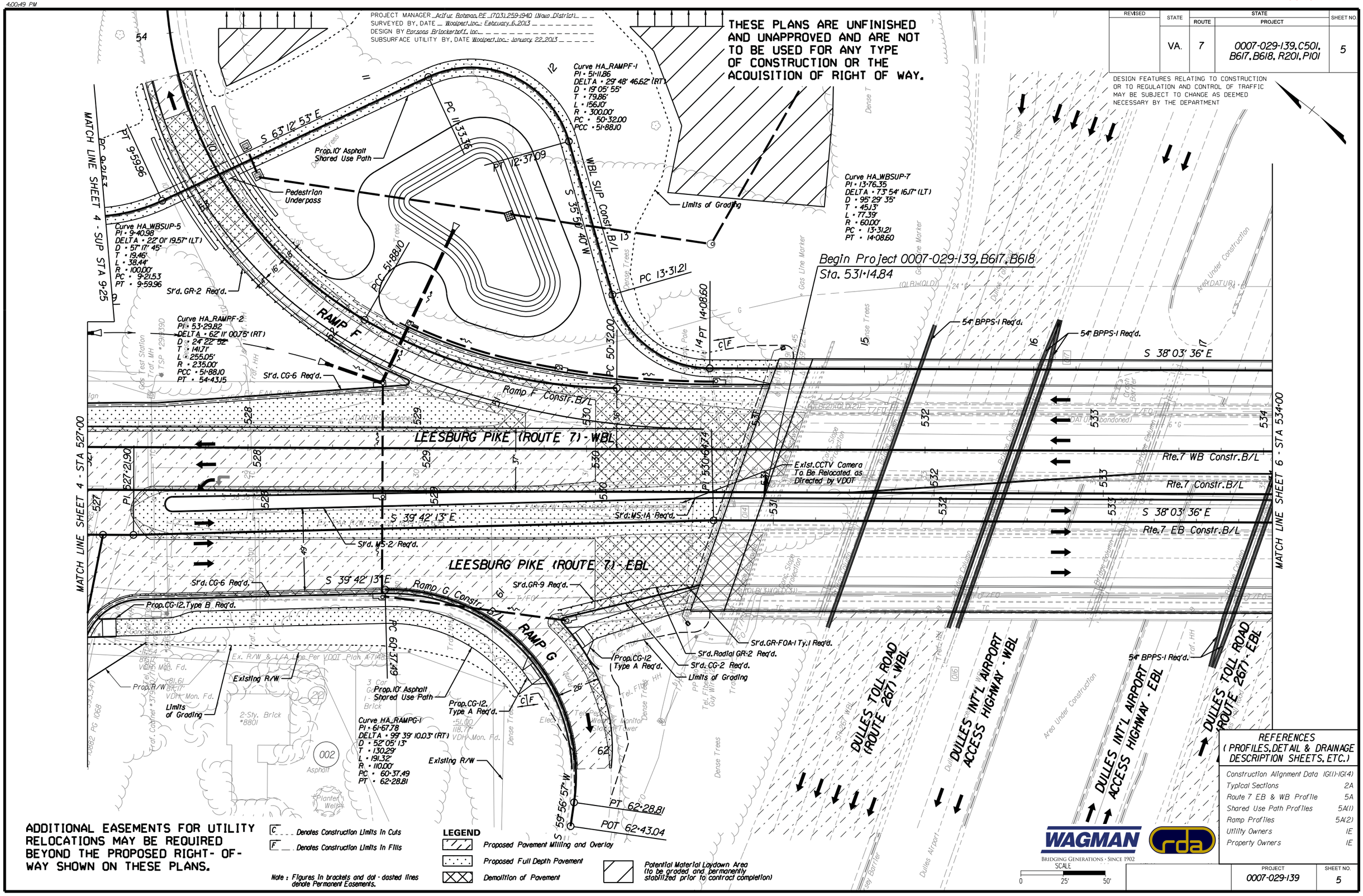

ADDITIONAL EASEMENTS FOR UTILITY RELOCATIONS MAY BE REQUIRED BEYOND THE PROPOSED RIGHT-OF-WAY SHOWN ON THESE PLANS.

C ___ Denotes Construction Limits in Cuts
F ___ Denotes Construction Limits in Fills

Note: Figures in brackets and dot-dashed lines denote Permanent Easements.

LEGEND

- Proposed Pavement Milling and Overlay
- Proposed Full Depth Pavement
- Demolition of Pavement
- Potential Material Laydown Area (to be graded and permanently stabilized prior to contract completion)

WAGMAN
BRIDGING GENERATIONS · SINCE 1902
rda

SCALE 0 25' 50'

REFERENCES (PROFILES, DETAIL & DRAINAGE DESCRIPTION SHEETS, ETC.)

Construction Alignment Data	IG(1)-IG(4)
Typical Sections	2A
Route 7 EB & WB Profile	5A
Shared Use Path Profiles	5A(1)
Ramp Profiles	5A(2)
Utility Owners	IE
Property Owners	IE

PROJECT	SHEET NO.
0007-029-139	5

3/6/2015

N:\Richmond Marketing\2014\14076-Route 7 over Dulles Toll Road DB\RDA Design\Letter of Submittal Plans\d82\35005Adgn
10:29:49 PM

CONCEPT PLAN

PROJECT MANAGER Arthur Bateman, PE (703) 259-1940 (Nova District)
SURVEYED BY, DATE Woolpert Inc. February 6, 2013
DESIGN BY Rinker Design Associates
SUBSURFACE UTILITY BY, DATE Woolpert Inc. January 22, 2013

REVISED	STATE	STATE ROUTE	STATE PROJECT	SHEET NO.
	VA.	7	0007-029-139, C501, R201, P101	5A

DESIGN FEATURES RELATING TO CONSTRUCTION OR TO REGULATION AND CONTROL OF TRAFFIC MAY BE SUBJECT TO CHANGE AS DEEMED NECESSARY BY THE DEPARTMENT

Rinker Design Associates, P.C.
Glen Allen, Virginia
Civil Engineer

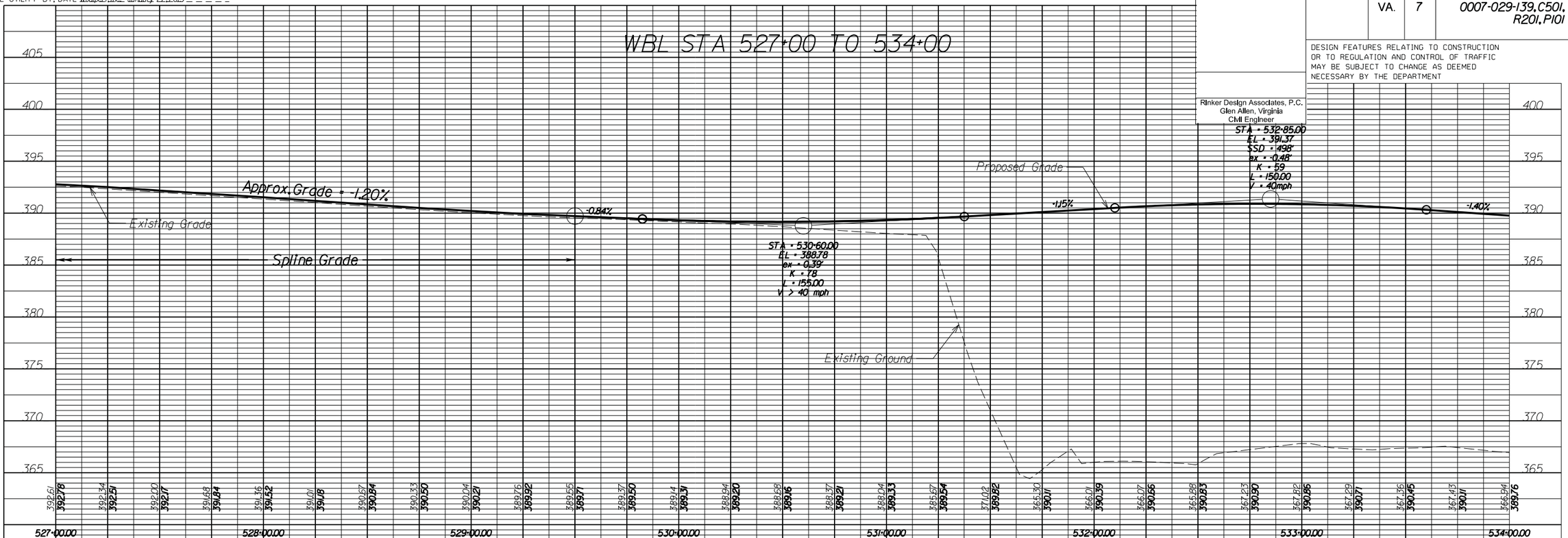

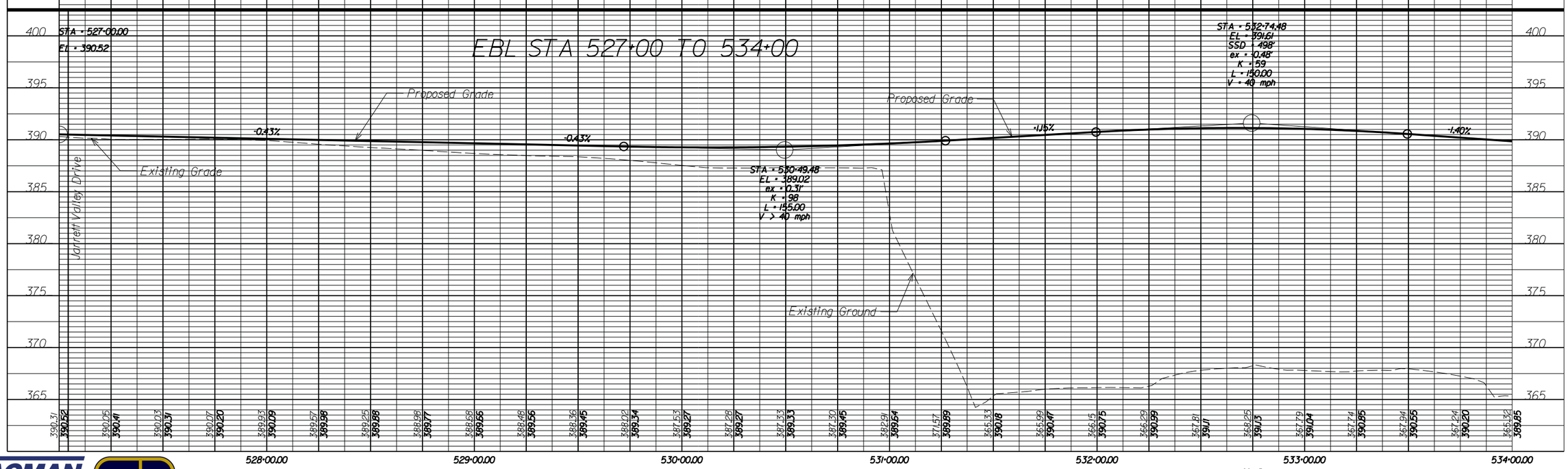

WAGMAN
BRIDGING GENERATIONS · SINCE 1902
rda

3/4/2015

SCALE 0 25' 50'

PROJECT	SHEET NO.
0007-029-139	5A

CONCEPT PLAN

PROJECT MANAGER Arthur Bateman, PE (703) 259-1940 (Nova District)
SURVEYED BY, DATE Woolpert, Inc., February 6, 2013
DESIGN BY Rinker Design Associates
SUBSURFACE UTILITY BY, DATE Woolpert, Inc., January 22, 2013

REVISED	STATE	STATE ROUTE	STATE PROJECT	SHEET NO.
	VA.	7	0007-029-139, C501, R201, P101	5A(1)

DESIGN FEATURES RELATING TO CONSTRUCTION OR TO REGULATION AND CONTROL OF TRAFFIC MAY BE SUBJECT TO CHANGE AS DEEMED NECESSARY BY THE DEPARTMENT

Rinker Design Associates, P.C.
Glen Allen, Virginia
Civil Engineer

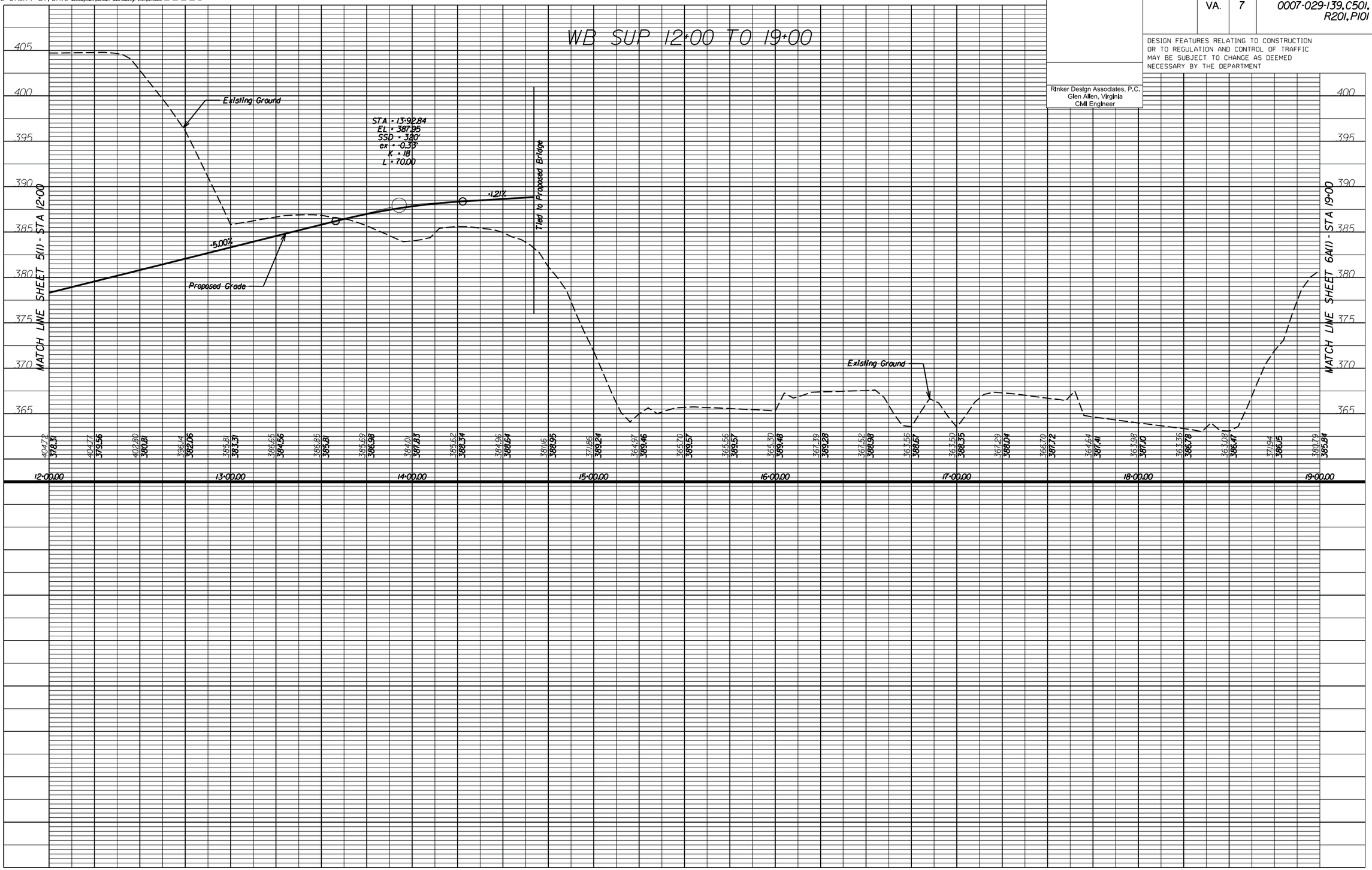

3/4/2015

WAGMAN
Bridging Generations · Since 1902

rda

SCALE
0 25' 50'

PROJECT	SHEET NO.
0007-029-139	5A(1)

N:\Richmond Marketing\2014\14076-Route 7 over Dulles Toll Road DB\RDA Design\Letter of Submittal Plans\d82\35005A(2).dgn
10:29:50 PM

CONCEPT PLAN

PROJECT MANAGER Arthur Bateman, PE (703) 259-1940 (Nova District)
SURVEYED BY, DATE Woolpert, Inc., February 6, 2013
DESIGN BY Rinker Design Associates
SUBSURFACE UTILITY BY, DATE Woolpert, Inc., January 22, 2013

REVISED	STATE	STATE ROUTE	STATE PROJECT	SHEET NO.
	VA.	7	0007-029-139, C501, R201, P101	5A(2)

DESIGN FEATURES RELATING TO CONSTRUCTION OR TO REGULATION AND CONTROL OF TRAFFIC MAY BE SUBJECT TO CHANGE AS DEEMED NECESSARY BY THE DEPARTMENT

Rinker Design Associates, P.C.
Glen Allen, Virginia
Civil Engineer

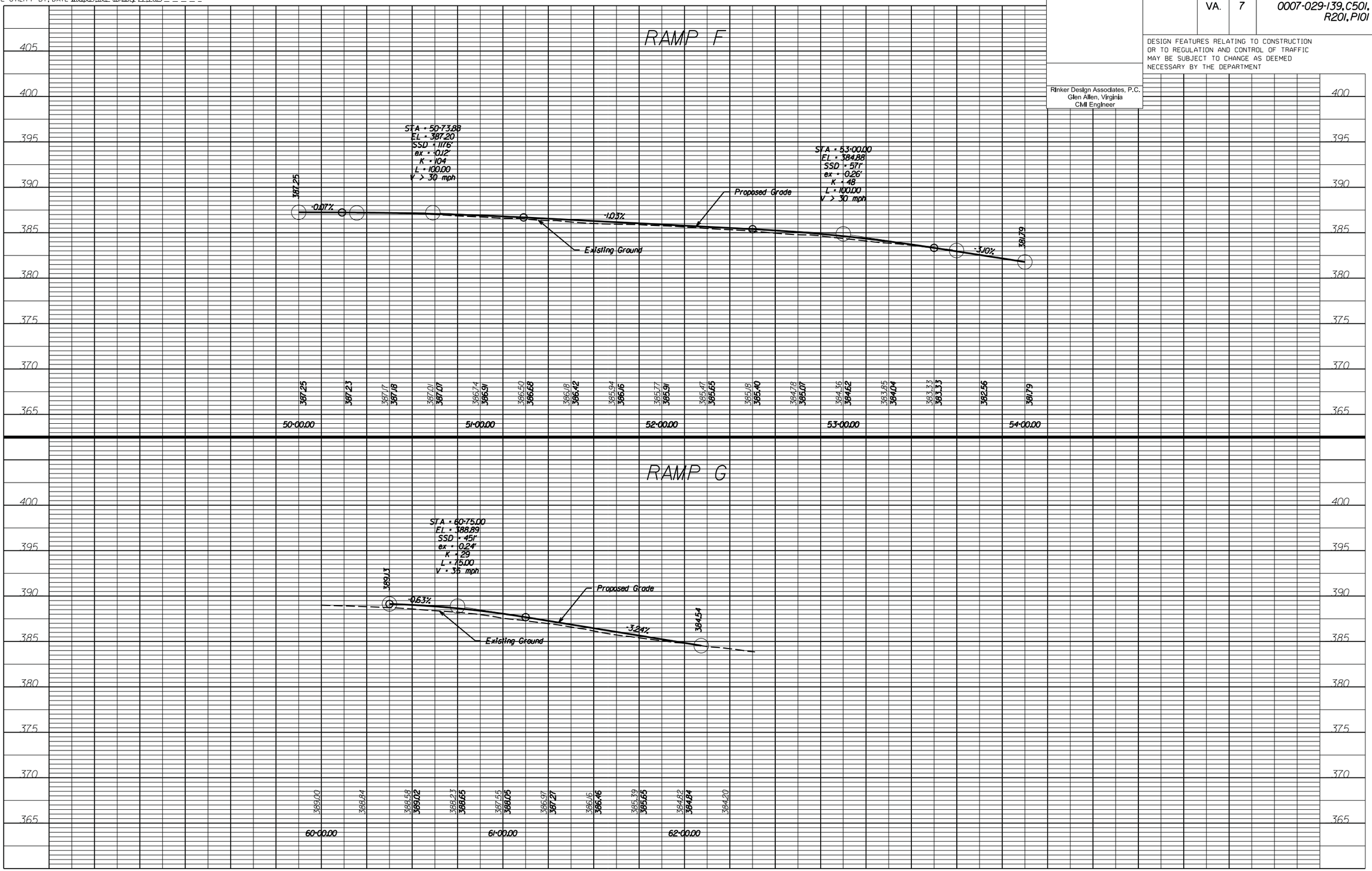

WAGMAN
BRIDGING GENERATIONS · SINCE 1902
rda

SCALE 0 25' 50'

PROJECT	SHEET NO.
0007-029-139	5A(2)

3/4/2015

CONCEPT PLAN

PROJECT MANAGER Arthur Bateman, PE (703) 259-1940 (Nova District)
SURVEYED BY, DATE Woolpert, Inc.- February 6, 2013
DESIGN BY Binker Design Associates
SUBSURFACE UTILITY BY, DATE Woolpert, Inc.- January 22, 2013

ADDITIONAL EASEMENTS FOR UTILITY RELOCATIONS MAY BE REQUIRED BEYOND THE PROPOSED RIGHT- OF- WAY SHOWN ON THESE PLANS.

REVISED	STATE	STATE ROUTE	STATE PROJECT	SHEET NO.
	VA.	7	0007-029-139, C501, B617, B618, R201, P101	6

DESIGN FEATURES RELATING TO CONSTRUCTION OR TO REGULATION AND CONTROL OF TRAFFIC MAY BE SUBJECT TO CHANGE AS DEEMED NECESSARY BY THE DEPARTMENT

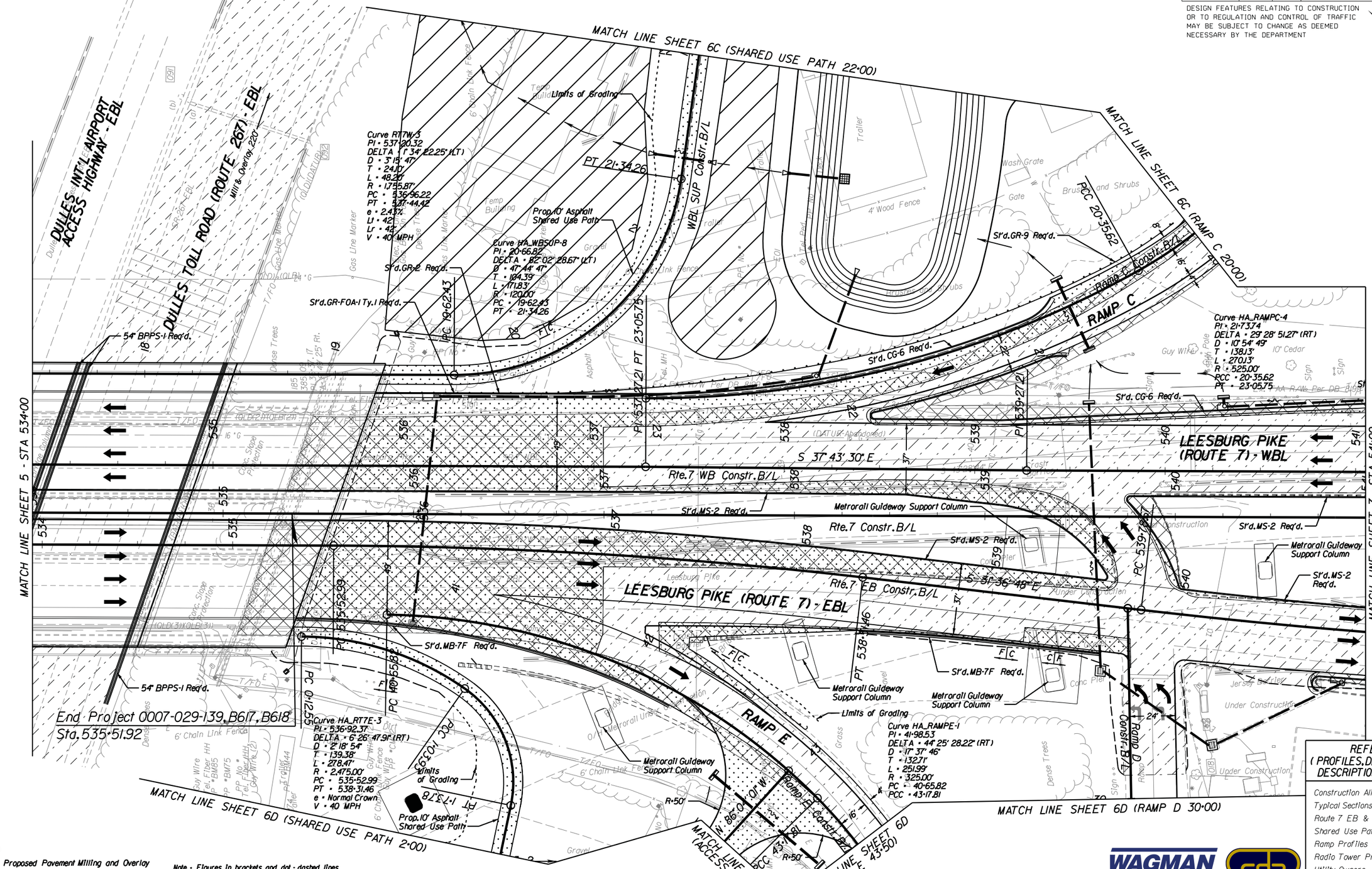

LEGEND

- Proposed Pavement Milling and Overlay
- Proposed Full Depth Pavement
- Demolition of Pavement

Note : Figures in brackets and dot - dashed lines denote Permanent Easements.

- C ... Denotes Construction Limits in Cuts
- F ... Denotes Construction Limits in Fills

Potential Material Laydown Area (to be graded and permanently stabilized prior to contract completion)

WAGMAN — BRIDGING GENERATIONS · SINCE 1902

rda

SCALE 0 25' 50'

REFERENCES (PROFILES, DETAIL & DRAINAGE DESCRIPTION SHEETS, ETC.)	
Construction Alignment Data	1G(1)-1G(4)
Typical Sections	2B
Route 7 EB & WB Profile	6A
Shared Use Path Profiles	6A(1)
Ramp Profiles	6A(2)
Radio Tower Profile	6A(3)
Utility Owners	1E
Property Owners	1E

PROJECT	SHEET NO.
0007-029-139	6

3/6/2015

CONCEPT PLAN

PROJECT MANAGER Arthur Bateman, PE (703) 259-1940 (Nova District)
SURVEYED BY, DATE Woolpert, Inc., February 6, 2013
DESIGN BY Rinker Design Associates
SUBSURFACE UTILITY BY, DATE Woolpert, Inc., January 22, 2013

REVISED	STATE	STATE ROUTE	STATE PROJECT	SHEET NO.
	VA.	7	0007-029-139, C501, R201, P101	6A

DESIGN FEATURES RELATING TO CONSTRUCTION OR TO REGULATION AND CONTROL OF TRAFFIC MAY BE SUBJECT TO CHANGE AS DEEMED NECESSARY BY THE DEPARTMENT

Rinker Design Associates, P.C.
Glen Allen, Virginia
Civil Engineer

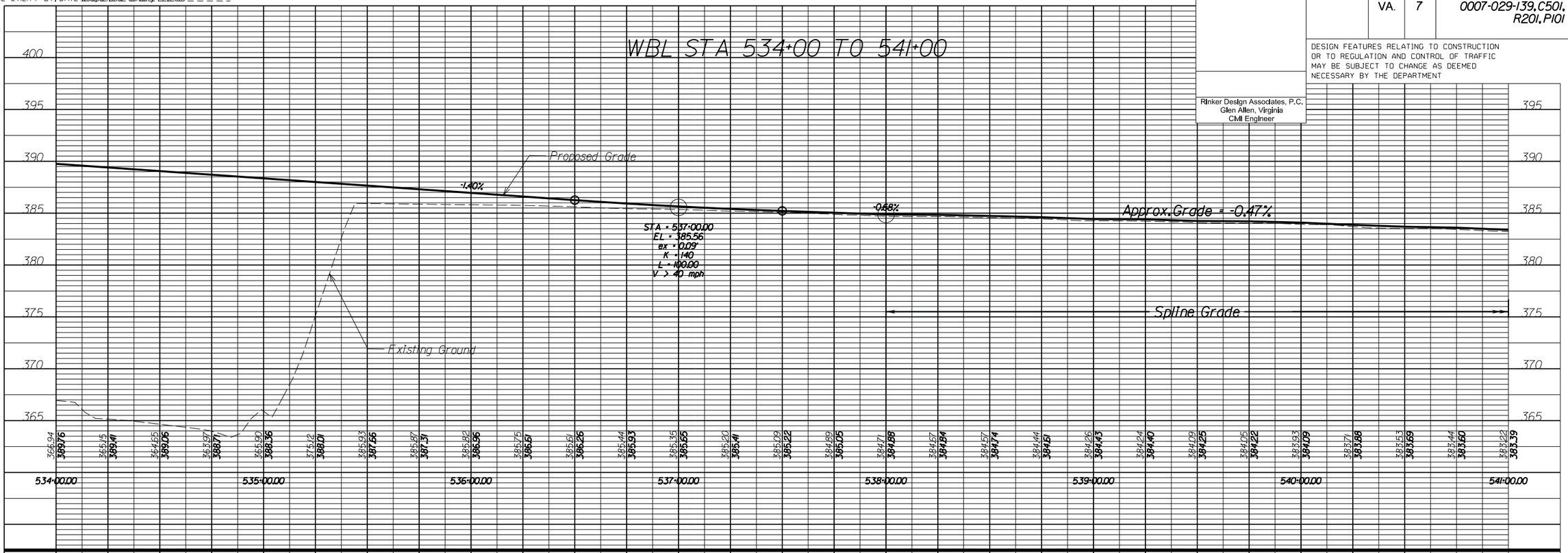

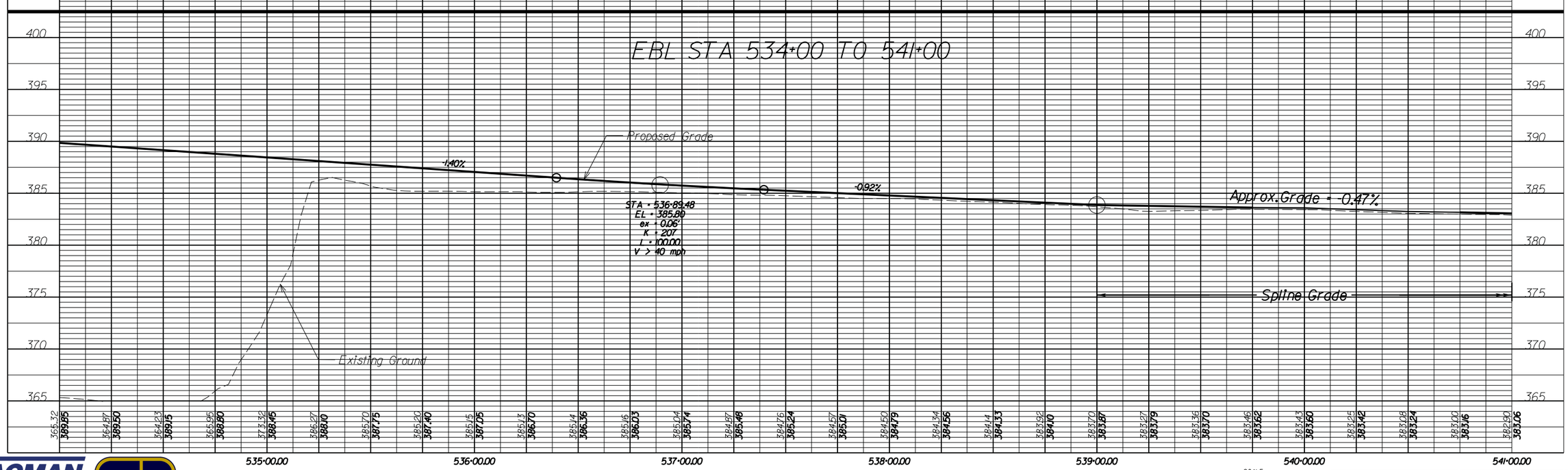

SCALE 0 25' 50'

PROJECT	SHEET NO.
0007-029-139	6A

3/4/2015

WAGMAN
BRIDGING GENERATIONS · SINCE 1902

rda

N:\Richmond Marketing\2014\14076-Route 7 over Dulles Toll Road DB\RDA Design\Letter of Submittal Plans\d82\35006A(1).dgn
10:29:57 PM

CONCEPT PLAN

PROJECT MANAGER Arthur Bateman, PE (703) 259-1940 (Nova District)
SURVEYED BY, DATE Woolpert Inc. February 6, 2013
DESIGN BY Rinker Design Associates
SUBSURFACE UTILITY BY, DATE Woolpert Inc. January 22, 2013

REVISED	STATE	STATE ROUTE	STATE PROJECT	SHEET NO.
	VA.	7	0007-029-139, C501, R201, P101	6A(1)

DESIGN FEATURES RELATING TO CONSTRUCTION OR TO REGULATION AND CONTROL OF TRAFFIC MAY BE SUBJECT TO CHANGE AS DEEMED NECESSARY BY THE DEPARTMENT

Rinker Design Associates, P.C.
Glen Allen, Virginia
Civil Engineer

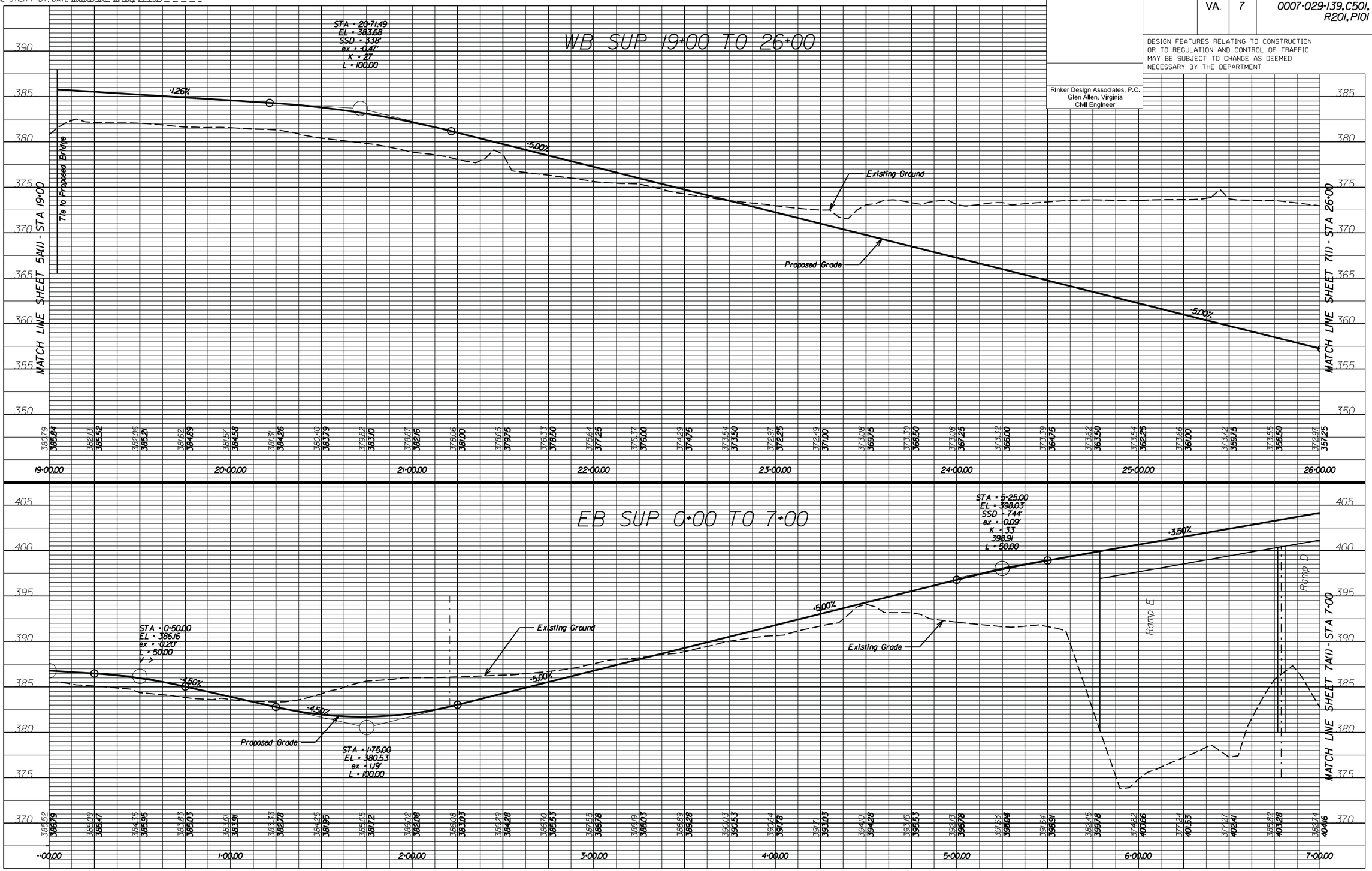

3/4/2015

WAGMAN
BRIDGING GENERATIONS • SINCE 1902

rda

SCALE 0 25' 50'

PROJECT	SHEET NO.
0007-029-139	6A(1)

N:\Richmond Marketing\2014\14076-Route 7 over Dulles Toll Road DB\RDA Design\Letter of Submittal Plans\d82\35006A(2).dgn
10:29:58 PM

CONCEPT PLAN

PROJECT MANAGER Arthur Bateman, PE (703) 259-1940 (Nova District)
SURVEYED BY, DATE Woolpert, Inc., February 6, 2013
DESIGN BY Rinker Design Associates
SUBSURFACE UTILITY BY, DATE Woolpert, Inc., January 22, 2013

REVISED	STATE	STATE ROUTE	STATE PROJECT	SHEET NO.
	VA.	7	0007-029-139, C501, R201, P101	6A(2)

DESIGN FEATURES RELATING TO CONSTRUCTION OR TO REGULATION AND CONTROL OF TRAFFIC MAY BE SUBJECT TO CHANGE AS DEEMED NECESSARY BY THE DEPARTMENT

Rinker Design Associates, P.C.
Glen Allen, Virginia
Civil Engineer

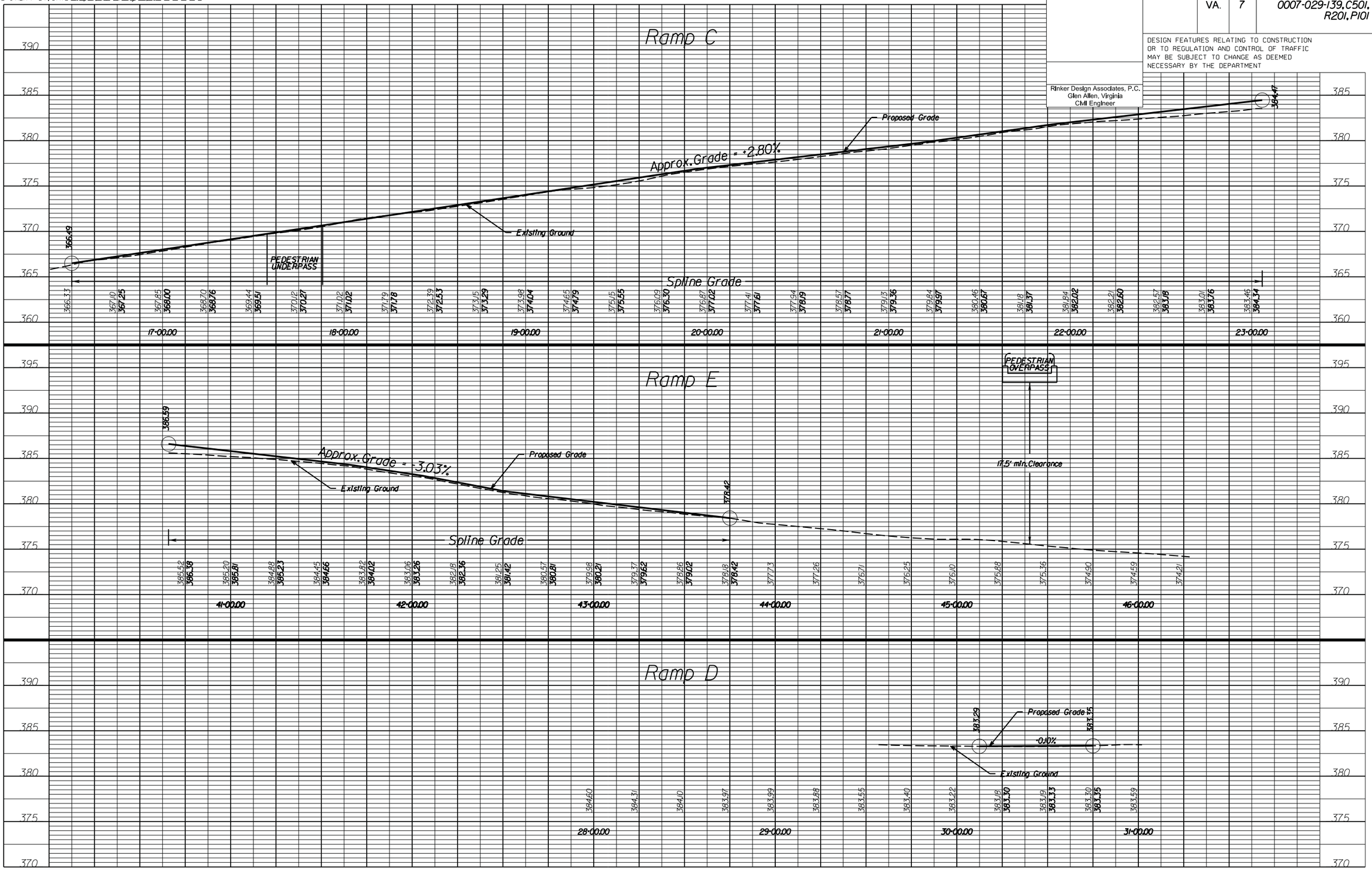

3/4/2015

WAGMAN
BRIDGING GENERATIONS · SINCE 1902
rda

SCALE 0 25' 50'

PROJECT	SHEET NO.
0007-029-139	6A(2)

N:\Richmond Marketing\2014\14076-Route 7 over Dulles Toll Road DB\RDA Design\Letter of Submittal Plans\d82\35006A(3).dgn
10:29:58 PM

CONCEPT PLAN

PROJECT MANAGER Arthur Bateman, PE (703) 259-1940 (Nova District)
SURVEYED BY, DATE Woolpert, Inc., February 6, 2013
DESIGN BY Rinker Design Associates
SUBSURFACE UTILITY BY, DATE Woolpert, Inc., January 22, 2013

REVISED	STATE	STATE ROUTE	STATE PROJECT	SHEET NO.
	VA.	7	0007-029-139, C501, R201, P101	6A(3)

DESIGN FEATURES RELATING TO CONSTRUCTION OR TO REGULATION AND CONTROL OF TRAFFIC MAY BE SUBJECT TO CHANGE AS DEEMED NECESSARY BY THE DEPARTMENT

Rinker Design Associates, P.C.
Glen Allen, Virginia
Civil Engineer

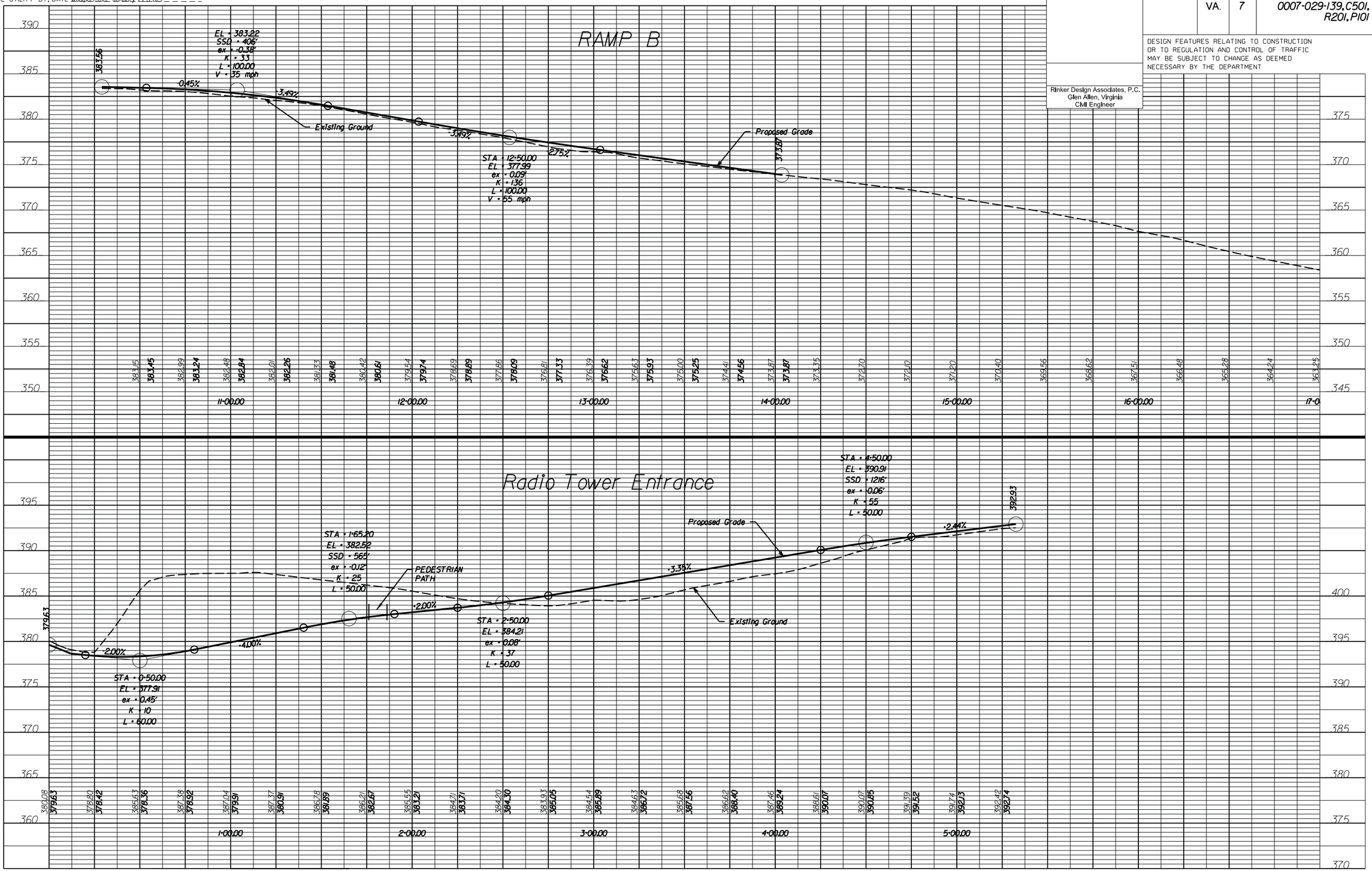

WAGMAN
BRIDGING GENERATIONS · SINCE 1902
rda

3/4/2015

SCALE 0 25' 50'

PROJECT	SHEET NO.
0007-029-139	6A(3)

CONCEPT PLAN

PROJECT MANAGER Arthur Bateman, PE (703) 259-1940 (Nova District)
SURVEYED BY, DATE Woolpert, Inc., February 6, 2013
DESIGN BY Rinker Design Associates
SUBSURFACE UTILITY BY, DATE Woolpert, Inc., January 22, 2013

ADDITIONAL EASEMENTS FOR UTILITY RELOCATIONS MAY BE REQUIRED BEYOND THE PROPOSED RIGHT-OF-WAY SHOWN ON THESE PLANS.

THESE PLANS ARE UNFINISHED AND UNAPPROVED AND ARE NOT TO BE USED FOR ANY TYPE OF CONSTRUCTION OR THE ACQUISITION OF RIGHT OF WAY.

REVISED	STATE	STATE ROUTE	STATE PROJECT	SHEET NO.
	VA.	7	0007-029-139, C501, R201, P101	6C

DESIGN FEATURES RELATING TO CONSTRUCTION OR TO REGULATION AND CONTROL OF TRAFFIC MAY BE SUBJECT TO CHANGE AS DEEMED NECESSARY BY THE DEPARTMENT

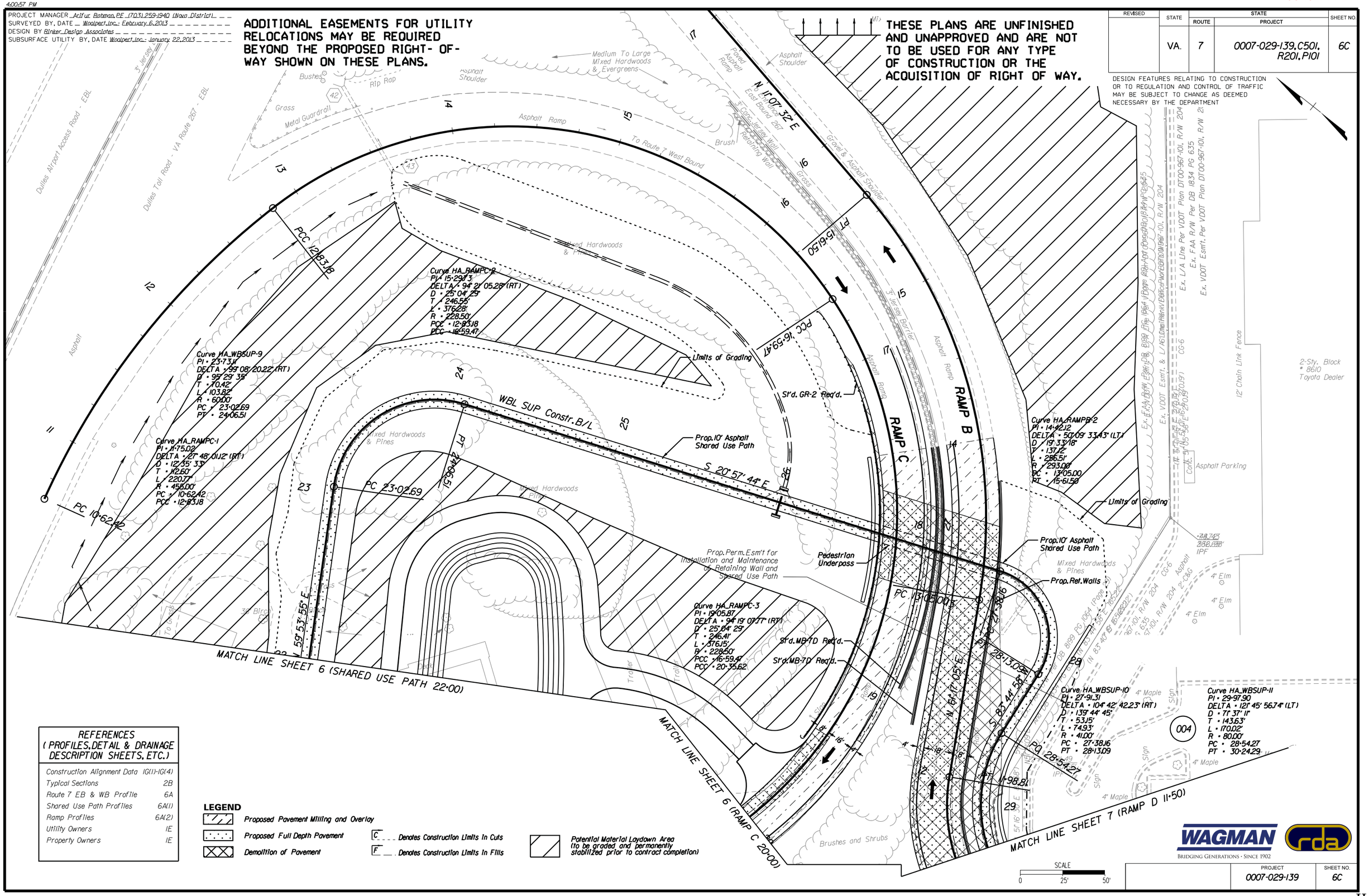

REFERENCES (PROFILES, DETAIL & DRAINAGE DESCRIPTION SHEETS, ETC.)	
Construction Alignment Data	1G(1)-1G(4)
Typical Sections	2B
Route 7 EB & WB Profile	6A
Shared Use Path Profiles	6A(1)
Ramp Profiles	6A(2)
Utility Owners	1E
Property Owners	1E

LEGEND

- Proposed Pavement Milling and Overlay
- Proposed Full Depth Pavement
- Demolition of Pavement
- C ___ Denotes Construction Limits In Cuts
- F ___ Denotes Construction Limits In Fills
- Potential Material Laydown Area (to be graded and permanently stabilized prior to contract completion)

SCALE 0 25' 50'

WAGMAN — BRIDGING GENERATIONS · SINCE 1902

PROJECT	SHEET NO.
0007-029-139	6C

3/6/2015

N:\Richmond Marketing\2014\14076-Route 7 over Dulles Toll Road DB\RDA Design\Letter of Submittal Plans\d82\35006D.dgn
4:00:58 PM

CONCEPT PLAN

PROJECT MANAGER Arthur Bateman, PE (703) 259-1940 (Nova District)
SURVEYED BY, DATE Woolpert, Inc. February 6, 2013
DESIGN BY Rinker Design Associates
SUBSURFACE UTILITY BY, DATE Woolpert, Inc. January 22, 2013

THESE PLANS ARE UNFINISHED AND UNAPPROVED AND ARE NOT TO BE USED FOR ANY TYPE OF CONSTRUCTION OR THE ACQUISITION OF RIGHT OF WAY.

ADDITIONAL EASEMENTS FOR UTILITY RELOCATIONS MAY BE REQUIRED BEYOND THE PROPOSED RIGHT-OF-WAY SHOWN ON THESE PLANS.

REVISED	STATE	STATE ROUTE	STATE PROJECT	SHEET NO.
	VA.	7	0007-029-139, C501, R201, P101	6D

DESIGN FEATURES RELATING TO CONSTRUCTION OR TO REGULATION AND CONTROL OF TRAFFIC MAY BE SUBJECT TO CHANGE AS DEEMED NECESSARY BY THE DEPARTMENT

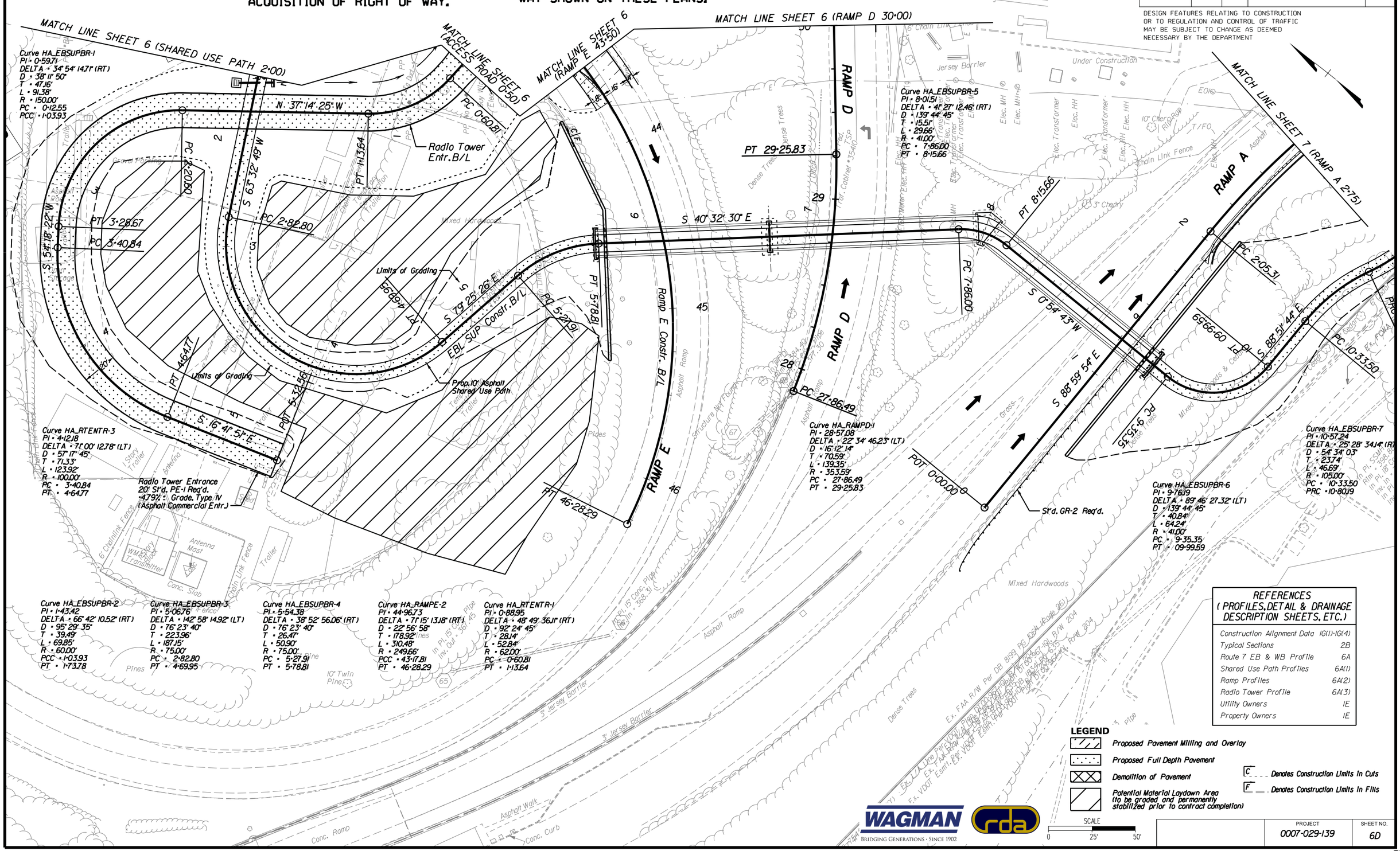
MATCH LINE SHEET 6 (SHARED USE PATH 2+00)
MATCH LINE SHEET 6 (ACCESS ROAD 0+50)
MATCH LINE SHEET 6 (RAMP E 43+50)
MATCH LINE SHEET 6 (RAMP D 30+00)
MATCH LINE SHEET 7 (RAMP A 2+75)
Curve HA_EBSUPBR-1
PI = 0+59.71
DELTA = 34° 54' 14.71" (RT)
D = 38° 11' 50"
T = 47.16'
L = 91.38'
R = 150.00'
PC = 0+12.55
PCC = 1+03.93
N 37° 14' 25" W
PC 0+60.81
Radio Tower Entr. B/L
PC 2+20.80
PT 1+13.64
S 63° 32' 49" W
PC 2+82.80
PT 3+28.67
PC 3+40.84
S 54° 18' 22" W
Limits of Grading
S 79° 25' 26" E
PT 4+69.95
EBL SUP Constr. B/L
PC 5+27.91
PT 5+78.81
Prop. 10' Asphalt Shared Use Path
PT 4+64.77
PT 5+32.56
S 16° 41' 51" E
Curve HA_RTENTR-3
PI = 4+12.18
DELTA = 71° 00' 12.78" (LT)
D = 57° 17' 45"
T = 71.33'
L = 123.92'
R = 100.00'
PC = 3+40.84
PT = 4+64.77
Radio Tower Entrance
20' St'd. PE-1 Req'd.
+4.79% ± Grade, Type IV
(Asphalt Commercial Entr.)
PT 46+28.29
Ramp E Constr. B/L
RAMP E
RAMP D
S 40° 32' 30" E
PT 29+25.83
Curve HA_EBSUPBR-5
PI = 8+01.51
DELTA = 41° 27' 12.46" (RT)
D = 139° 44' 45"
T = 15.51'
L = 29.66'
R = 41.00'
PC = 7+86.00
PT = 8+15.66
PT 8+15.66
PC 7+86.00
S 0° 54' 43" W
PC 27+86.49
Curve HA_RAMPD-1
PI = 28+57.08
DELTA = 22° 34' 46.23" (LT)
D = 16° 12' 14"
T = 70.59'
L = 139.35'
R = 353.59'
PC = 27+86.49
PT = 29+25.83
POT 0+00.00
St'd. GR-2 Req'd.
RAMP A
PC 2+05.31
S 88° 59' 54" E
PT 09+99.59
S 88° 51' 44" E
PC 10+33.50
PC 9+35.35
Curve HA_EBSUPBR-6
PI = 9+76.19
DELTA = 89° 46' 27.32" (LT)
D = 139° 44' 45"
T = 40.84'
L = 64.24'
R = 41.00'
PC = 9+35.35
PT = 09+99.59
Curve HA_EBSUPBR-7
PI = 10+57.24
DELTA = 25° 28' 34.14" (RT)
D = 54° 34' 03"
T = 23.74'
L = 46.69'
R = 105.00'
PC = 10+33.50
PRC = 10+80.19
Curve HA_EBSUPBR-2
PI = 1+43.42
DELTA = 66° 42' 10.52" (RT)
D = 95° 29' 35"
T = 39.49'
L = 69.85'
R = 60.00'
PCC = 1+03.93
PT = 1+73.78
Curve HA_EBSUPBR-3
PI = 5+06.76
DELTA = 142° 58' 14.92" (LT)
D = 76° 23' 40"
T = 223.96'
L = 187.15'
R = 75.00'
PC = 2+82.80
PT = 4+69.95
Curve HA_EBSUPBR-4
PI = 5+54.38
DELTA = 38° 52' 56.06" (RT)
D = 76° 23' 40"
T = 26.47'
L = 50.90'
R = 75.00'
PC = 5+27.91
PT = 5+78.81
Curve HA_RAMPE-2
PI = 44+96.73
DELTA = 71° 15' 13.18" (RT)
D = 22° 56' 58"
T = 178.92'
L = 310.48'
R = 249.66'
PCC = 43+17.81
PT = 46+28.29
Curve HA_RTENTR-1
PI = 0+88.95
DELTA = 48° 49' 36.11" (RT)
D = 92° 24' 45"
T = 28.14'
L = 52.84'
R = 62.00'
PC = 0+60.81
PT = 1+13.64
Conc
Jersey Barrier
Under Construction
Elec. Transformer
Elec. HH
Elec. MH
Chain Link Fence
10" Cherry
Rip Rap
T/FO
3" Cherry
Dense Trees
Mixed Hardwoods
Grass
Asphalt Ramp
Structure Not Found
Pines
Antenna Mast
Trailer
Conc. Slab
Conc. Ramp
Asphalt Walk
Conc. Curb
3' Jersey Barrier
10" Twin Pine
Ex. FAA R/W Per DB 8199 PG 1061 (Page 261)
Ex. VDOT Esm't. Per VDOT DB 8199 PG 1061 (Page 261)
Ex. VDOT Esm't. Per VDOT DB 1934 PG 635

N:\Richmond Marketing\2014\14076-Route 7 over Dulles Toll Road DB\RDA Design\Letter of Submittal Plans\d82\35007.dgn
10:30:14 PM

CONCEPT PLAN

PROJECT MANAGER Arthur Bateman, PE (703) 259-1940 (Nova District)
SURVEYED BY, DATE Woolpert, Inc.- February 6, 2013
DESIGN BY Binker Design Associates
SUBSURFACE UTILITY BY, DATE Woolpert, Inc.- January 22, 2013

THESE PLANS ARE UNFINISHED AND UNAPPROVED AND ARE NOT TO BE USED FOR ANY TYPE OF CONSTRUCTION OR THE ACQUISITION OF RIGHT OF WAY.

LEGEND
- Proposed Pavement Milling and Overlay
- Proposed Full Depth Pavement
- Demolition of Pavement

REVISED	STATE	ROUTE	PROJECT	SHEET NO.
	VA.	7	0007-029-139, C501, R201, P101	7

DESIGN FEATURES RELATING TO CONSTRUCTION OR TO REGULATION AND CONTROL OF TRAFFIC MAY BE SUBJECT TO CHANGE AS DEEMED NECESSARY BY THE DEPARTMENT

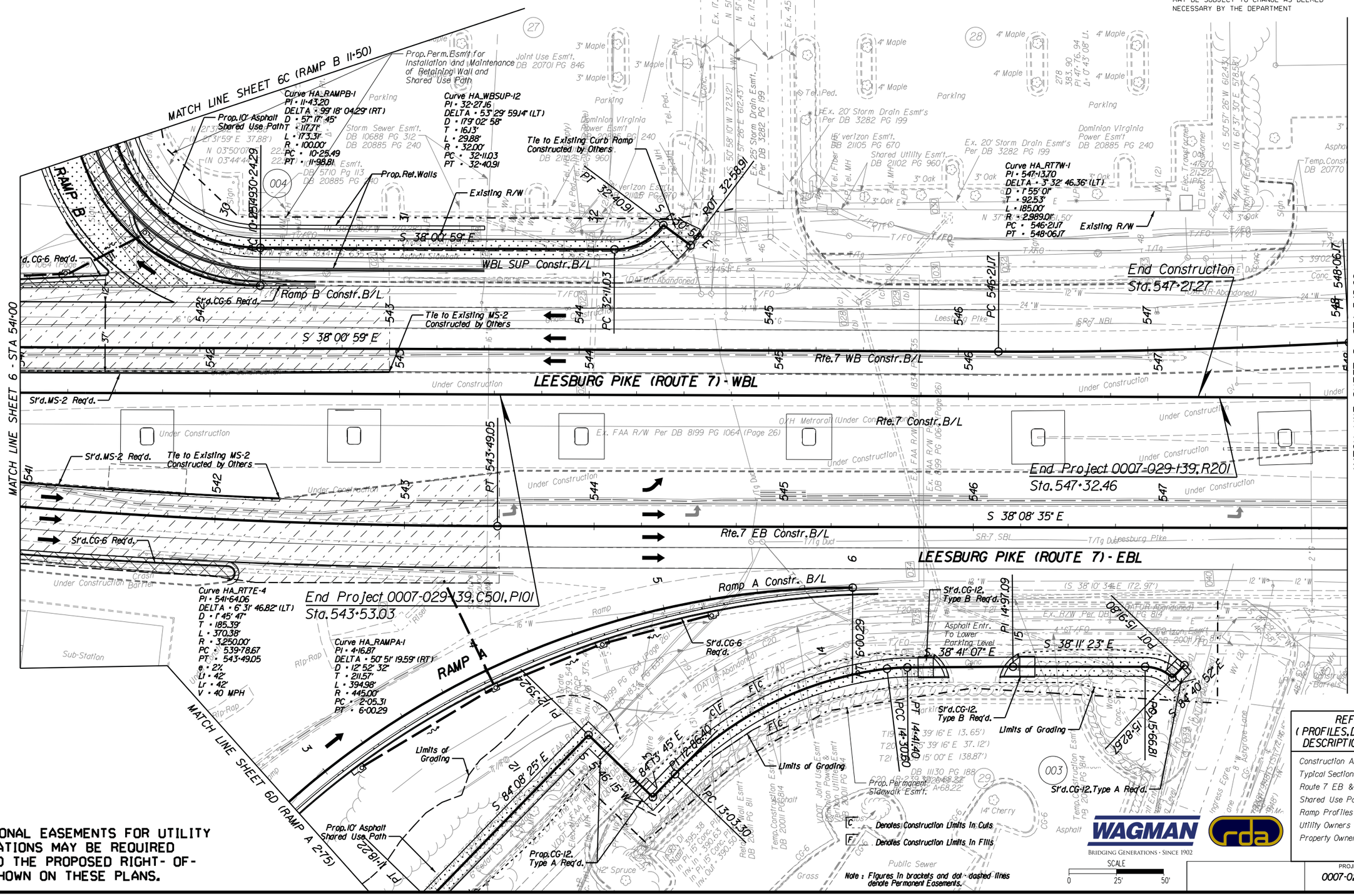

ADDITIONAL EASEMENTS FOR UTILITY RELOCATIONS MAY BE REQUIRED BEYOND THE PROPOSED RIGHT-OF-WAY SHOWN ON THESE PLANS.

REFERENCES (PROFILES, DETAIL & DRAINAGE DESCRIPTION SHEETS, ETC.)

Construction Alignment Data	1G(1)-1G(4)
Typical Sections	2B
Route 7 EB & WB Profile	7A
Shared Use Path Profiles	7A(1)
Ramp Profiles	7A(2)
Utility Owners	1E
Property Owners	1E

WAGMAN — BRIDGING GENERATIONS · SINCE 1902

rda

PROJECT	SHEET NO.
0007-029-139	7

3/4/2015

N:\Richmond Marketing\2014\14076-Route 7 over Dulles Toll Road DB\RDA Design\Letter of Submittal Plans\d82135007A.dgn
10:30:16 PM

CONCEPT PLAN

PROJECT MANAGER Arthur Bateman, PE (703) 259-1940 (Nova District)
SURVEYED BY, DATE Woolpert Inc. February 6, 2013
DESIGN BY Rinker Design Associates
SUBSURFACE UTILITY BY, DATE Woolpert Inc. January 22, 2013

REVISED	STATE	STATE ROUTE	STATE PROJECT	SHEET NO.
	VA.	7	0007-029-139, C501, R201, P101	7A

DESIGN FEATURES RELATING TO CONSTRUCTION OR TO REGULATION AND CONTROL OF TRAFFIC MAY BE SUBJECT TO CHANGE AS DEEMED NECESSARY BY THE DEPARTMENT

Rinker Design Associates, P.C.
Glen Allen, Virginia
Civil Engineer

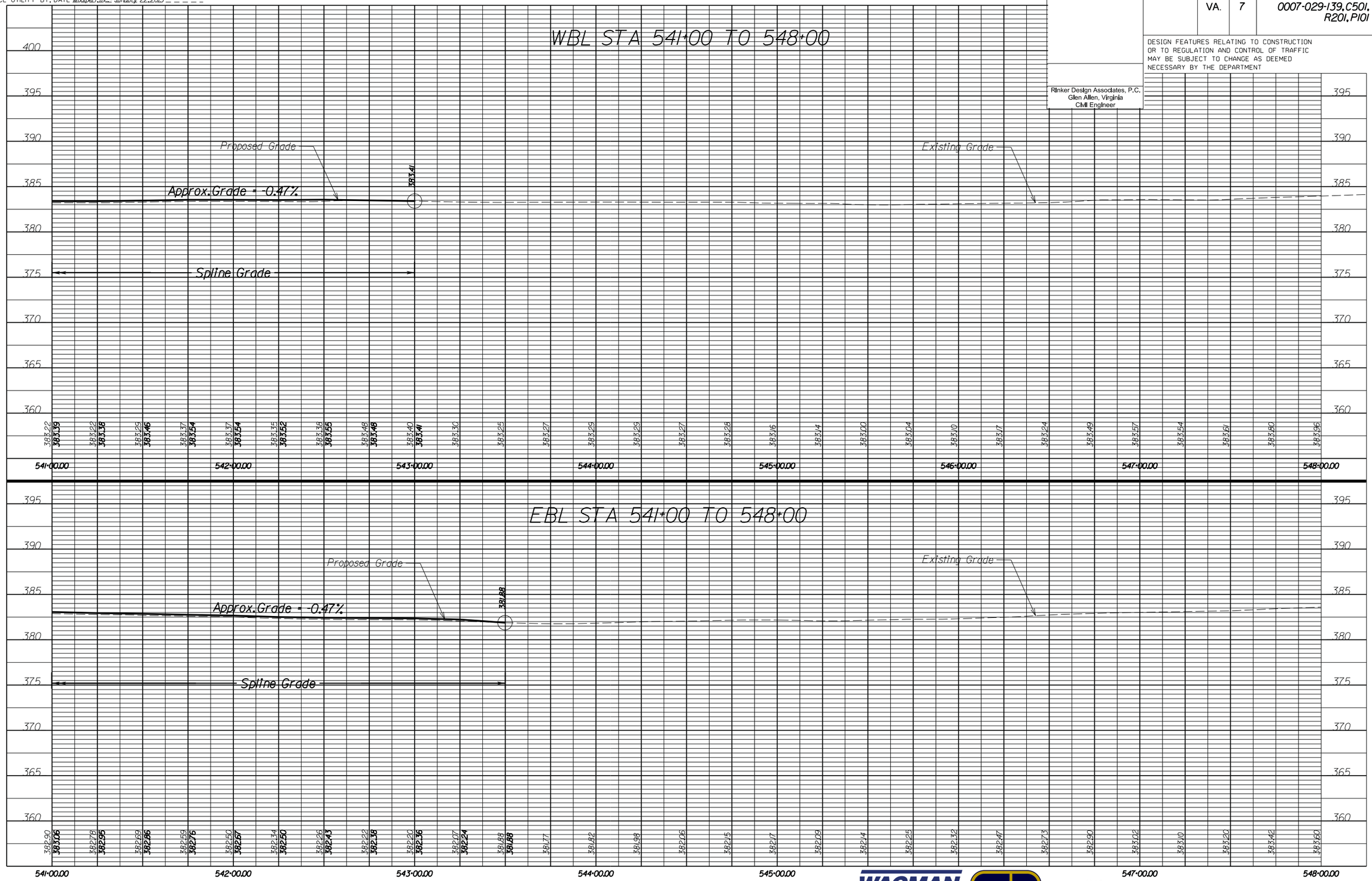

WAGMAN
Bridging Generations · Since 1902

rda

SCALE 0 25' 50'

PROJECT	SHEET NO.
0007-029-139	7A

3/4/2015

N:\Richmond Marketing\2014\14076-Route 7 over Dulles Toll Road DB\RDA Design\Letter of Submittal Plans\d82\350074(1).dgn
10:30:18 PM

CONCEPT PLAN

PROJECT MANAGER Arthur Bateman, PE (703) 259-1940 (Nova District)
SURVEYED BY, DATE Woolpert Inc. February 6, 2013
DESIGN BY Rinker Design Associates
SUBSURFACE UTILITY BY, DATE Woolpert Inc. January 22, 2013

REVISED	STATE	STATE ROUTE	STATE PROJECT	SHEET NO.
	VA.	7	0007-029-139, C501, R201, P101	7A(1)

DESIGN FEATURES RELATING TO CONSTRUCTION OR TO REGULATION AND CONTROL OF TRAFFIC MAY BE SUBJECT TO CHANGE AS DEEMED NECESSARY BY THE DEPARTMENT

Rinker Design Associates, P.C.
Glen Allen, Virginia
Civil Engineer

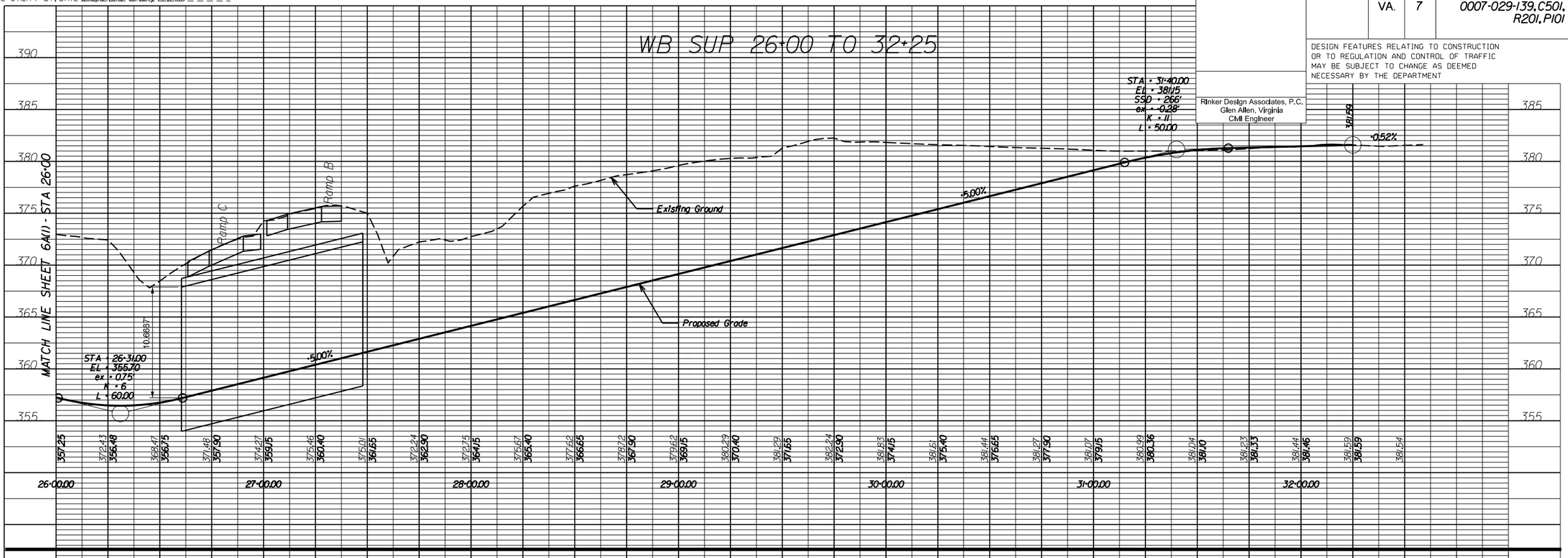

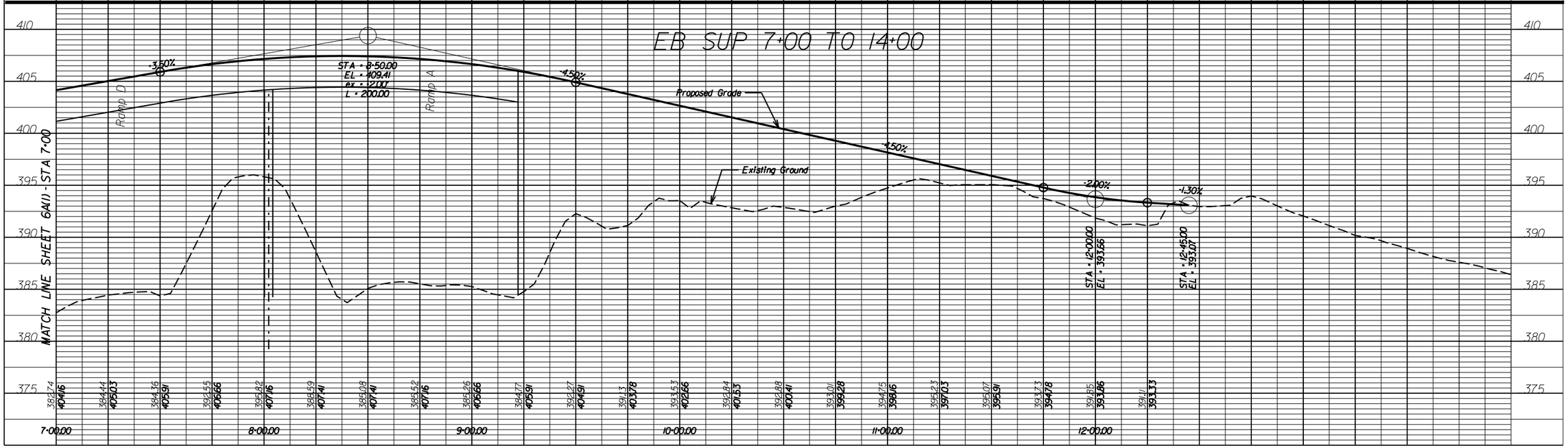

SCALE 0 25' 50'

PROJECT	SHEET NO.
0007-029-139	7A(1)

3/4/2015

WAGMAN
BRIDGING GENERATIONS · SINCE 1902

rda

N:\Richmond Marketing\2014\14076-Route 7 over Dulles Toll Road DB\RDA Design\Letter of Submittal Plans\d82135007A(2).dgn
10:30:19 PM

CONCEPT PLAN

PROJECT MANAGER Arthur Bateman, PE (703) 259-1940 (Nova District)
SURVEYED BY, DATE Woolpert Inc. February 6, 2013
DESIGN BY Rinker Design Associates
SUBSURFACE UTILITY BY, DATE Woolpert Inc. January 22, 2013

REVISED	STATE	STATE ROUTE	STATE PROJECT	SHEET NO.
	VA.	7	0007-029-139, C501, R201, P101	7A(2)

DESIGN FEATURES RELATING TO CONSTRUCTION OR TO REGULATION AND CONTROL OF TRAFFIC MAY BE SUBJECT TO CHANGE AS DEEMED NECESSARY BY THE DEPARTMENT

Rinker Design Associates, P.C.
Glen Allen, Virginia
Civil Engineer

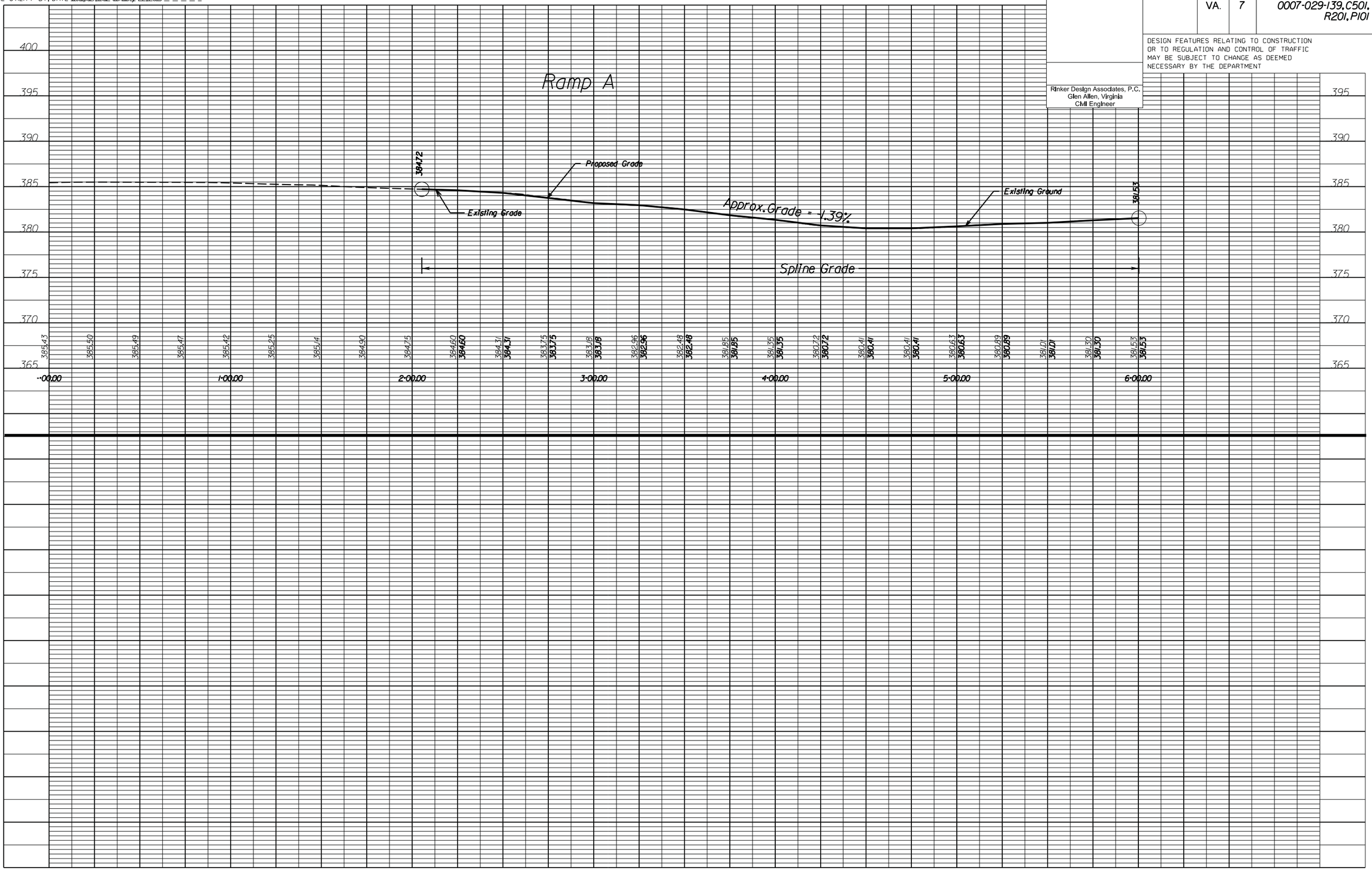

SCALE
0 25' 50'

PROJECT	SHEET NO.
0007-029-139	7A(2)

3/4/2015

WAGMAN
BRIDGING GENERATIONS · SINCE 1902

CONCEPT PLAN

PROJECT MANAGER Arthur Bateman, PE (703) 259-1940 (Nova District)
SURVEYED BY, DATE Woolpert, Inc.- February 6, 2013
DESIGN BY Binker Design Associates
SUBSURFACE UTILITY BY, DATE Woolpert, Inc.- January 22, 2013

REVISED	STATE	STATE ROUTE	STATE PROJECT	SHEET NO.
	VA.	7	0007-029-139, C501, R201, P101	8

DESIGN FEATURES RELATING TO CONSTRUCTION OR TO REGULATION AND CONTROL OF TRAFFIC MAY BE SUBJECT TO CHANGE AS DEEMED NECESSARY BY THE DEPARTMENT

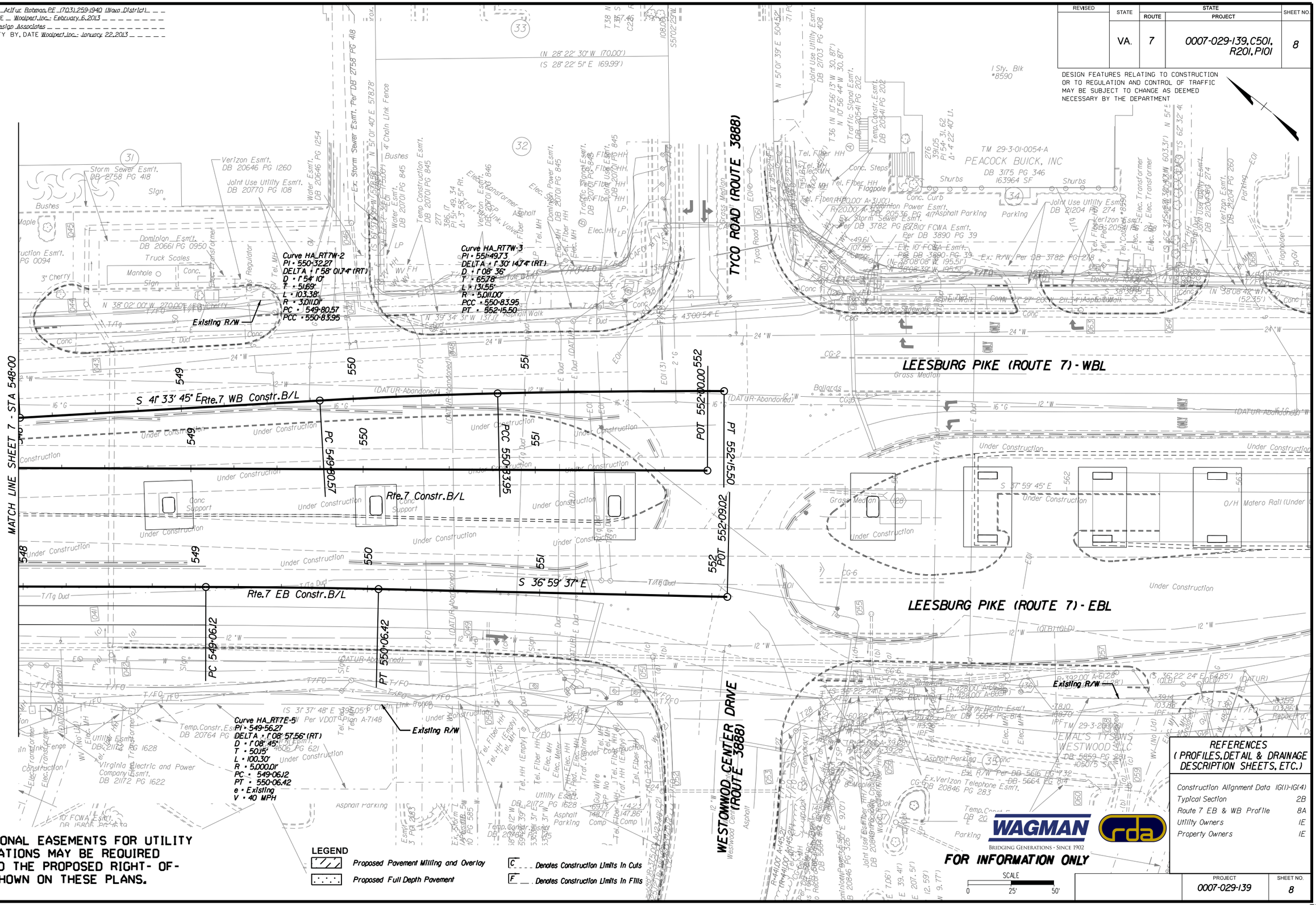

ADDITIONAL EASEMENTS FOR UTILITY RELOCATIONS MAY BE REQUIRED BEYOND THE PROPOSED RIGHT- OF- WAY SHOWN ON THESE PLANS.

LEGEND

- Proposed Pavement Milling and Overlay
- Proposed Full Depth Pavement
- C ____ Denotes Construction Limits In Cuts
- F ____ Denotes Construction Limits In Fills

REFERENCES (PROFILES, DETAIL & DRAINAGE DESCRIPTION SHEETS, ETC.)

Construction Alignment Data	1G(1)-1G(4)
Typical Section	2B
Route 7 EB & WB Profile	8A
Utility Owners	1E
Property Owners	1E

WAGMAN
BRIDGING GENERATIONS · SINCE 1902

rda

FOR INFORMATION ONLY

SCALE 0 25' 50'

PROJECT	SHEET NO.
0007-029-139	8

3/4/2015

CONCEPT PLAN

PROJECT MANAGER Arthur Bateman, PE (703) 259-1940 (Nova District)
SURVEYED BY, DATE Woolpert, Inc., February 6, 2013
DESIGN BY Rinker Design Associates
SUBSURFACE UTILITY BY, DATE Woolpert, Inc., January 22, 2013

REVISED	STATE	STATE ROUTE	STATE PROJECT	SHEET NO.
	VA.	7	0007-029-139, C501, R201, P101	8A

DESIGN FEATURES RELATING TO CONSTRUCTION OR TO REGULATION AND CONTROL OF TRAFFIC MAY BE SUBJECT TO CHANGE AS DEEMED NECESSARY BY THE DEPARTMENT

Rinker Design Associates, P.C.
Glen Allen, Virginia
Civil Engineer

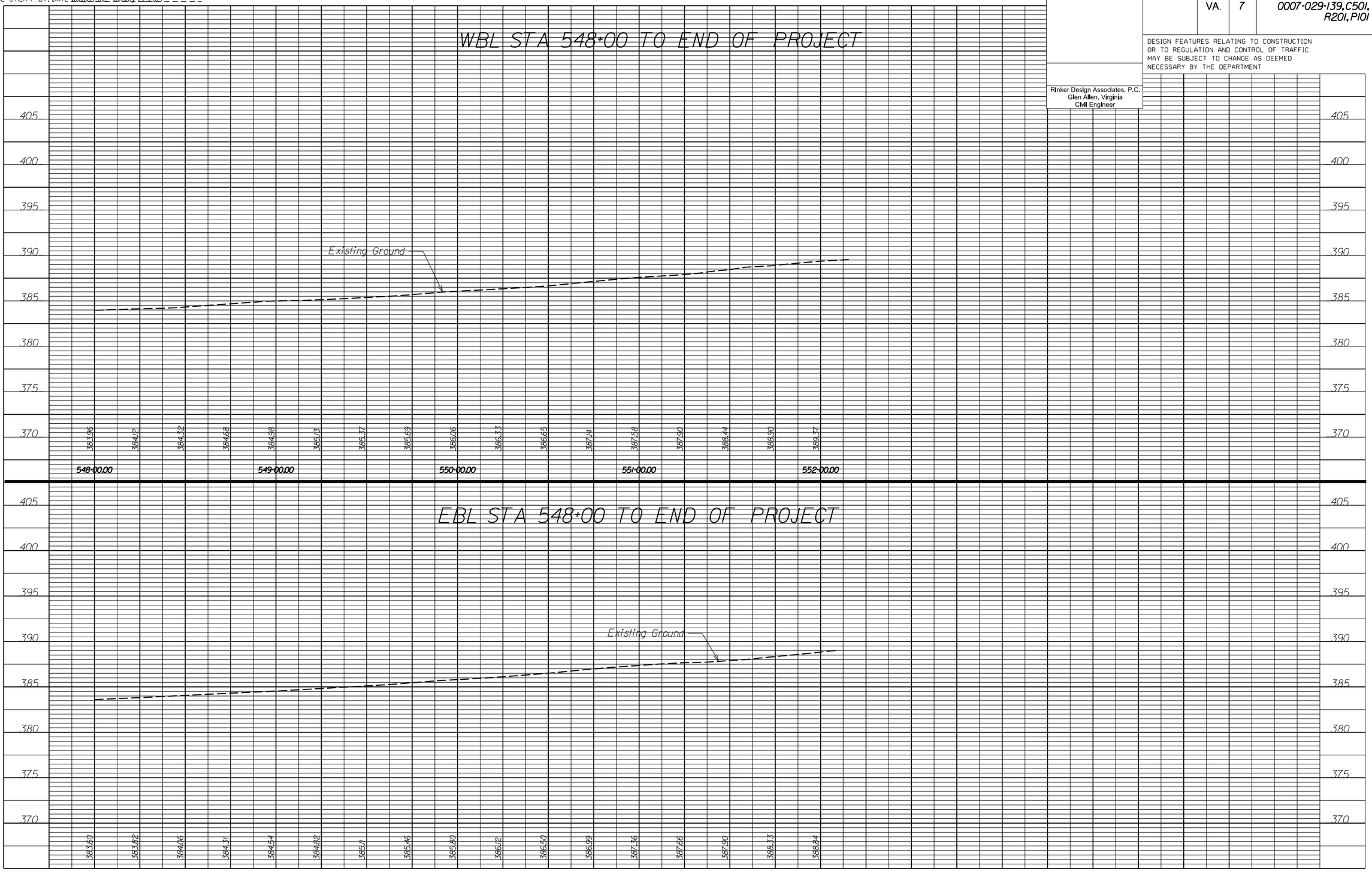

WAGMAN
BRIDGING GENERATIONS · SINCE 1902

rda

SCALE
0 25' 50'

PROJECT	SHEET NO.
0007-029-139	8A

3/4/2015

CONCEPT PLAN

PROJECT MANAGER Arthur Bateman, PE (703) 259-1940 (Nova District)
SURVEYED BY, DATE Woolpert, Inc.: February 6, 2013
DESIGN BY Binker Design Associates
SUBSURFACE UTILITY BY, DATE Woolpert, Inc.: January 22, 2013

REVISED	STATE	STATE ROUTE	STATE PROJECT	SHEET NO.
	VA.	7	0007-029-139, C501, R201, P101	2A

DESIGN FEATURES RELATING TO CONSTRUCTION OR TO REGULATION AND CONTROL OF TRAFFIC MAY BE SUBJECT TO CHANGE AS DEEMED NECESSARY BY THE DEPARTMENT

TYPICAL SECTIONS

West of Bridge Over Dulles Toll Road and Dulles Airport Access Road

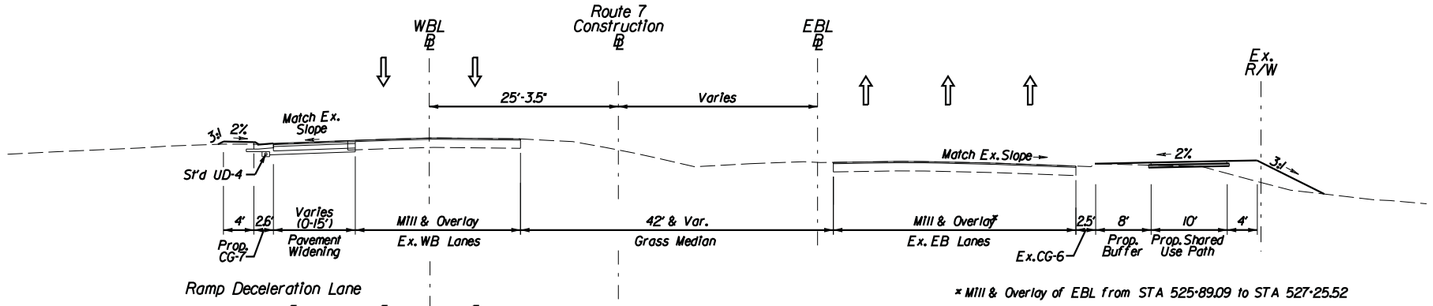

STA 521+25.00 to STA 527+25.52

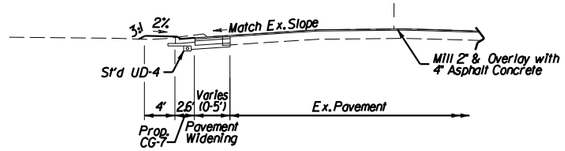

STA 521+25.00 to STA 524+31.97

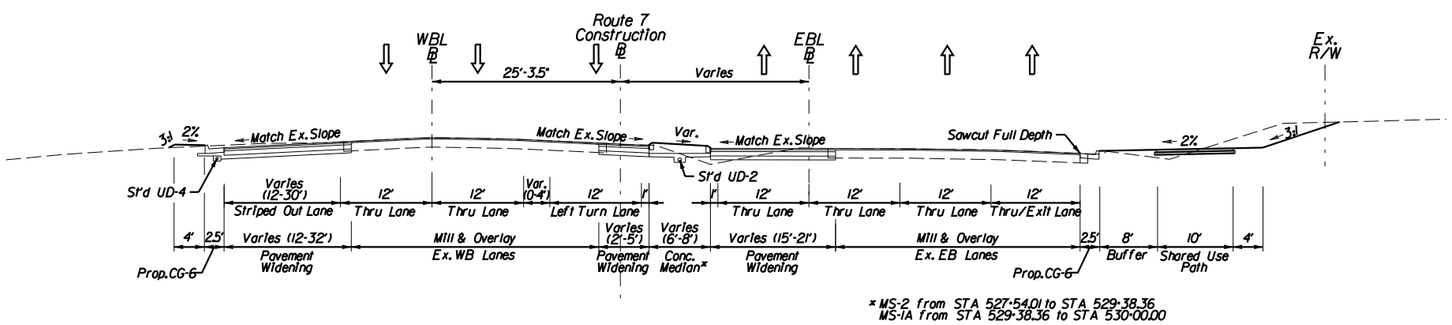

STA 527+25.52 to 530+00.00

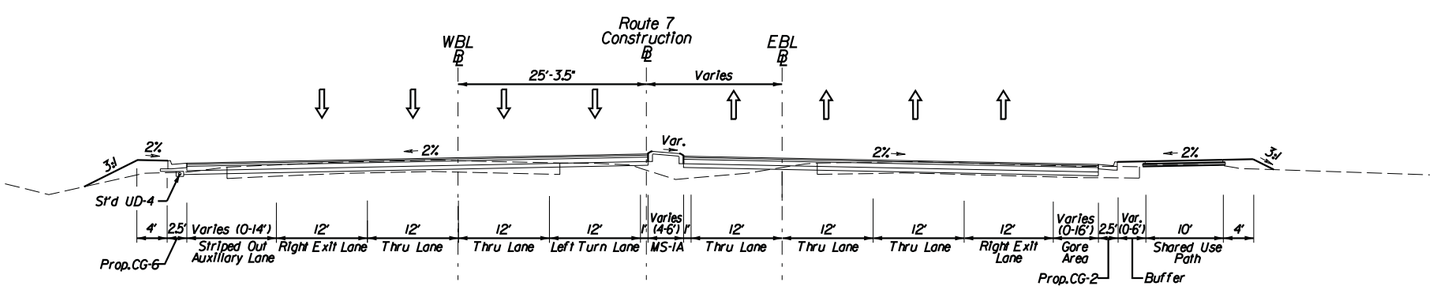

STA 530+00.00 to STA 530+79.19 (Begin Bridge Approach Slab)

PAVEMENT SECTION

New Pavement and Pavement Widening
- Surface - 2" Asphalt Concrete, Type SM-9.5D (estimated at 236 lbs/sq.yd.)
- Intermediate - 2" Asphalt Concrete, Type IM-19.0A (estimated at 236 lbs/sq.yd.)
- Base - 8" Asphalt Concrete, Type BM-25.0A
- Subbase - 6" Aggregate Base Material, Type I, Size 21B. The subbase should be extended one (1) foot behind the curb and gutter and connected to a standard UD-4 edgedrain, in accordance with UD-4 standard details.

Mill and Overlay
- For salvage/build-up areas, the existing pavement shall be milled two (2) inches and replaced with the following:
- Surface - 2" Asphalt Concrete, Type SM-9D (estimated at 236 lbs/sq.yd.)
- Intermediate - 2" Asphalt Concrete, Type IM-19.0A (estimated at 236 lbs/sq.yd.)

Shared-Use Path
- Surface - 2" Asphalt Concrete, Type SM-9.5A (estimated at 236 lbs/sq.yd.)
- Subbase - 6" Aggregate Base Material, Type I, Size No. 21B, extended a minimum of 6" beyond the edges of asphalt pavement.

Hydraulic Cement Concrete Sidewalks
- Surface - 4" Class A3 Hydraulic Cement Concrete
- Subbase - 4" Aggregate Base Material Type I, Size No. 21A, extended 6" on either side of the surface material.

Temporary Pavement
- All temporary pavement designs shall have a minimum six (6) inches of asphalt concrete and shall meet the following minimum design criteria:
- -Design Life - six (6) months minimum
- -Reliability - eighty-five percent (85%) minimum
- -Initial Servicability - 4.2 minimum
- -Terminal Servicability - 2.8 minimum
- -Standard Deviation - 0.49 minimum
- -CBR value for the subgrade soils determined laboratory tests

NOTES:

1. St'd. UD-4 underdrains shall be placed under curb/curb & gutter on low side of roadway for mainline and ramps.
2. Underdrains for the shared used path will be evaluated by the Geotechnical Engineer in accordance with the applicable standards.
3. St'd. UD-2 shall be placed under raised grass medians.
4. All paved shoulders shall have mainline pavement (mainline and ramps)
5. Shared Use Path Typical Sections (especially in a cut) will need to be modified after drainage analysis and design is completed.
6. Where guardrail is required widen shoulder 3'.
7. CG-2 style curb to be used west of Jarett Valley Drive. CG-3 style curb to be used east of Jarett Valley Drive.

WAGMAN
BRIDGING GENERATIONS · SINCE 1902
rda

TYPICAL SECTIONS (1)		
	PROJECT	SHEET NO.
	0007-029-139	2A

3/6/2015

CONCEPT PLAN

PROJECT MANAGER Arif ur Rahman, PE (703) 259-1940 (Nova District)
SURVEYED BY, DATE Woolpert, Inc. - February 6, 2013
DESIGN BY Rinker Design Associates, P.C.
SUBSURFACE UTILITY BY, DATE Woolpert, Inc. - January 22, 2013

THESE PLANS ARE UNFINISHED AND UNAPPROVED AND ARE NOT TO BE USED FOR ANY TYPE OF CONSTRUCTION OR THE ACQUISITION OF RIGHT OF WAY.

TYPICAL SECTIONS

East of Bridge Over Dulles Toll Road and Dulles Airport Access Road

REVISED	STATE	STATE ROUTE	STATE PROJECT	SHEET NO.
	VA.	7	0007-029-139, C501, R201, P101	2B

DESIGN FEATURES RELATING TO CONSTRUCTION OR TO REGULATION AND CONTROL OF TRAFFIC MAY BE SUBJECT TO CHANGE AS DEEMED NECESSARY BY THE DEPARTMENT

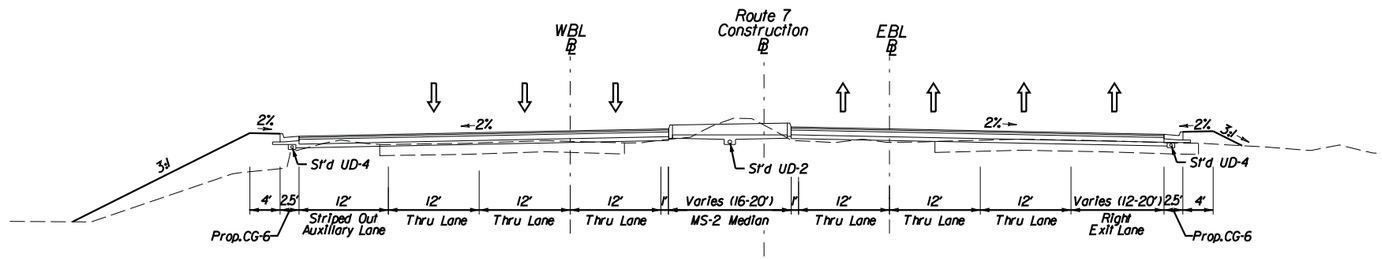

STA 535+57.65 (End Bridge Approach Slab) to STA 537+00.00

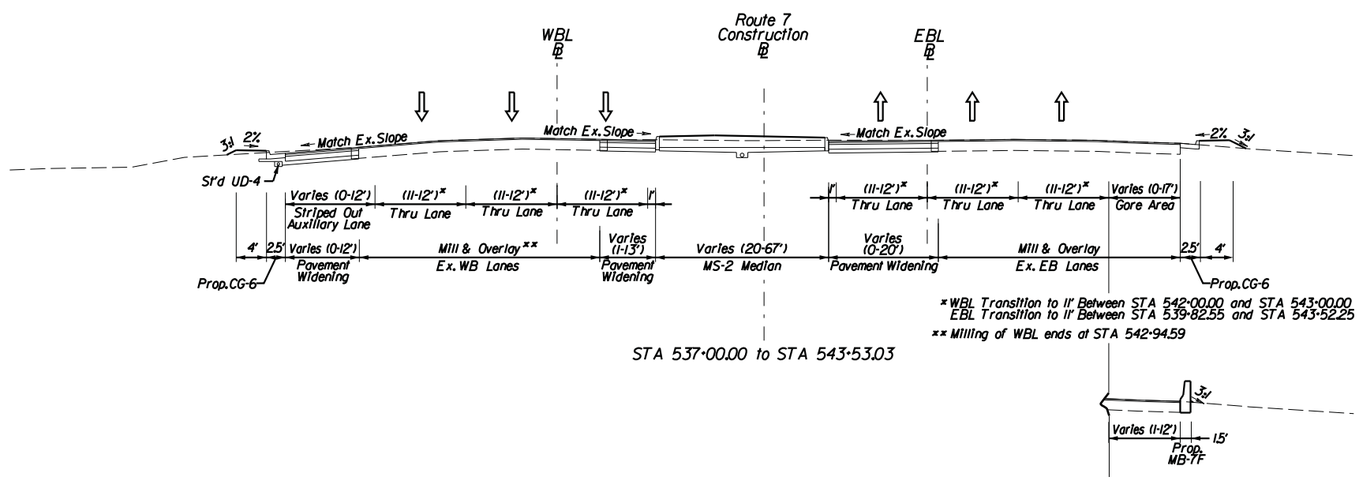

STA 537+00.00 to STA 543+53.03

STA 537+54.58 to STA 539+57.23

NOTES:

1. St'd. UD-4 underdrains shall be placed under curb/curb & gutter on low side of roadway for mainline and ramps.
2. Underdrains for the shared used path will be evaluated by the Geotechnical Engineer in accordance with the applicable standards.
3. St'd. UD-2 shall be placed under raised grass medians.
4. All paved shoulders shall have mainline pavement (mainline and ramps)
5. Shared Use Path Typical Sections (especially in a cut) will need to be modified after drainage analysis and design is completed.
6. Where guardrail is required widen shoulder 3'.
7. CG-2 style curb to be used west of Jarett Valley Drive. CG-3 style curb to be used east of Jarett Valley Drive.

WAGMAN
BRIDGING GENERATIONS · SINCE 1902

rda

TYPICAL SECTIONS (2)		
	PROJECT	SHEET NO.
	0007-029-139	2B

3/6/2015

CONCEPT PLAN

PROJECT MANAGER Arthur Bateman, PE (703) 259-1940 (Nova District)
SURVEYED BY, DATE Woolpert, Inc. - February 6, 2013
DESIGN BY Rinker Design Associates, P.C.
SUBSURFACE UTILITY BY, DATE Woolpert, Inc. - January 22, 2013

THESE PLANS ARE UNFINISHED AND UNAPPROVED AND ARE NOT TO BE USED FOR ANY TYPE OF CONSTRUCTION OR THE ACQUISITION OF RIGHT OF WAY.

TYPICAL SECTIONS

Ramps and Shared Use Paths

REVISED	STATE	STATE ROUTE	STATE PROJECT	SHEET NO.
	VA.	7	0007-029-139, C501, R201, P101	2C

DESIGN FEATURES RELATING TO CONSTRUCTION OR TO REGULATION AND CONTROL OF TRAFFIC MAY BE SUBJECT TO CHANGE AS DEEMED NECESSARY BY THE DEPARTMENT

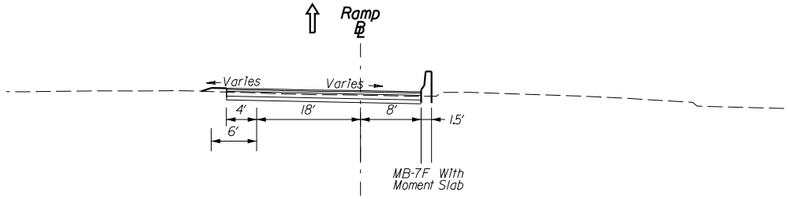

Ramp B: STA 10+25 to STA 13+50 Full Depth
STA 13+50 to STA 13+75 Mill & Overlay

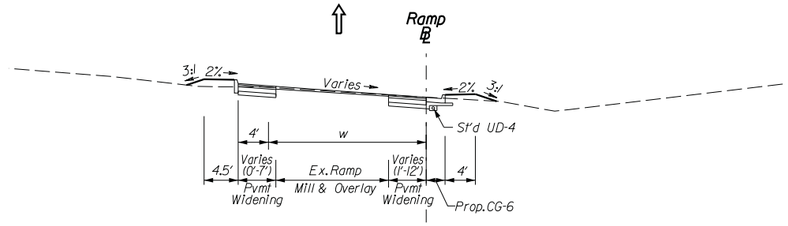

Ramp C: STA 20+75 to STA 22+00 (w = 16')
Ramp F: STA 51+70 to STA 52+00 (w = 16')
Ramp G: STA 60+37 to STA 62+10 (Left Ends STA 61+50, w = 22')
Ramp I: STA 81+70 to STA 83+42 (w = 16')

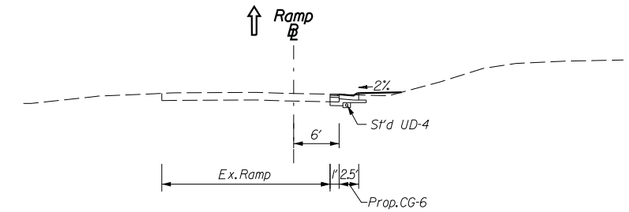

Ramp A: STA 2+05 to STA 6+01

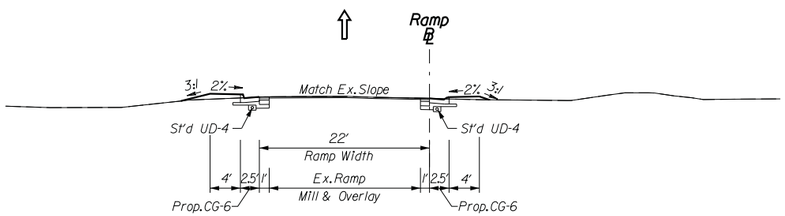

Ramp H: STA 70+35 to STA 70+73

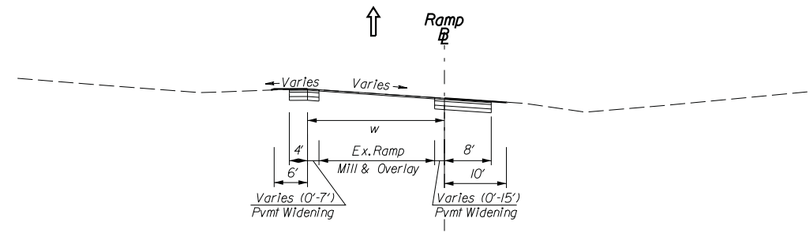

Ramp B: STA 13+75 to STA 14+00 (w = 16')
Ramp C: STA 17+60 to STA 17+85, STA 18+35 to STA 20+75 (w = 16')
Ramp D: STA 30+10 to STA 30+75 (w = 22')
Ramp E: STA 42+25 to STA 43+70 (w = 16')
Ramp F: STA 52+00 to STA 52+70, STA 53+55 to STA 53+75 (w = 16')
Ramp G: STA 61+50 to STA 62+10 (Left Shoulder) (w = 16')
Ramp H: STA 68+75 to STA 69+10, STA 70+10 to STA 70+35 (w = 22')
Ramp I: STA 79+75 to STA 80+35, STA 81+35 to STA 81+70 (w = 16')

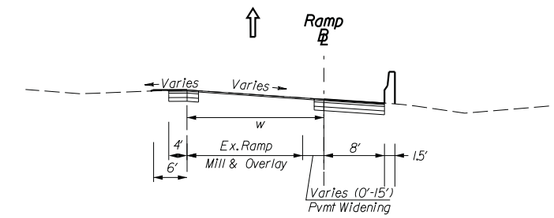

Ramp E: STA 40+66 to STA 42+25 (w = 16')

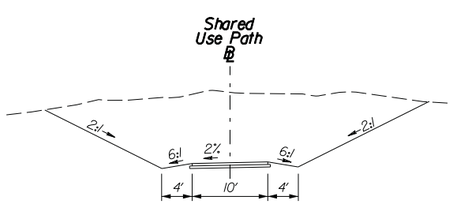

SHARED USE PATH IN CUT
(SEE NOTE 4)

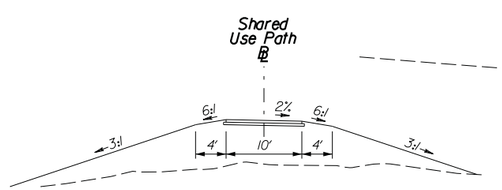

SHARED USE PATH IN FILL
(SEE NOTE 4)

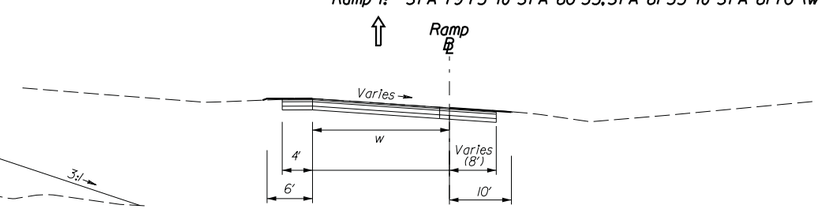

Ramp C: STA 17+85 to STA 18+35 (w = 16')
Ramp F: STA 52+70 to STA 53+55 (w = 16')
Ramp H: STA 69+10 to STA 70+10 (w = 22')
Ramp I: STA 80+35 to STA 81+35 (w = 16')

Ramp F: STA 50+32 to STA 51+70

NOTES:

1. St'd. UD-4 underdrains shall be placed under curb/curb & gutter on low side of roadway for mainline and ramps.
2. Underdrains for the shared used path will be evaluated by the Geotechnical Engineer in accordance with the applicable standards.
3. St'd. UD-2 shall be placed under raised grass medians.
4. All paved shoulders shall have mainline pavement (mainline and ramps)
5. Shared Use Path Typical Sections (especially in a cut) will need to be modified after drainage analysis and design is completed.
6. Where guardrail is required widen shoulder 3'.
7. CG-2 style curb to be used west of Jarett Valley Drive. CG-3 style curb to be used east of Jarett Valley Drive.

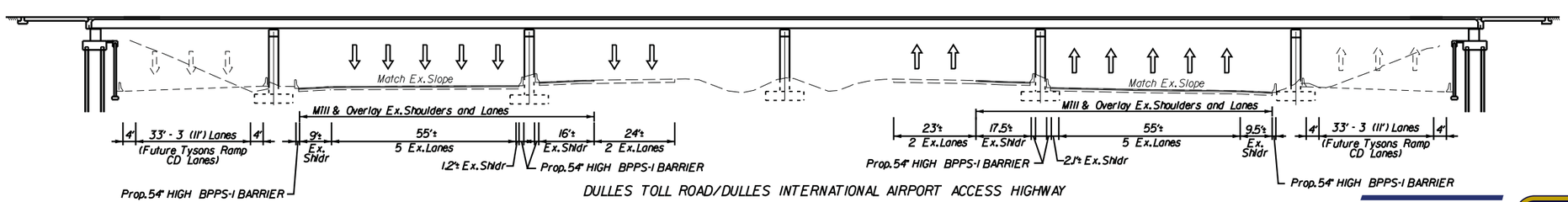

DULLES TOLL ROAD/DULLES INTERNATIONAL AIRPORT ACCESS HIGHWAY

WAGMAN
BRIDGING GENERATIONS · SINCE 1902

rda

TYPICAL SECTIONS (3)		
	PROJECT	SHEET NO.
	0007-029-139	2C

3/6/2015

4.2.3 Conceptual Bridge Plans

Volume II

STATE	FEDERAL AID ROUTE	FEDERAL AID PROJECT	STATE ROUTE	STATE PROJECT	SHEET NO.
VA.	—	-	7	0007-029-139, B617, B618	11(1)
NBIS Number:		000000000006246 000000000006248	UPC No.	82135	
Federal Oversight Code:		-	FHWA Construction and Scour Code:		X231-SN

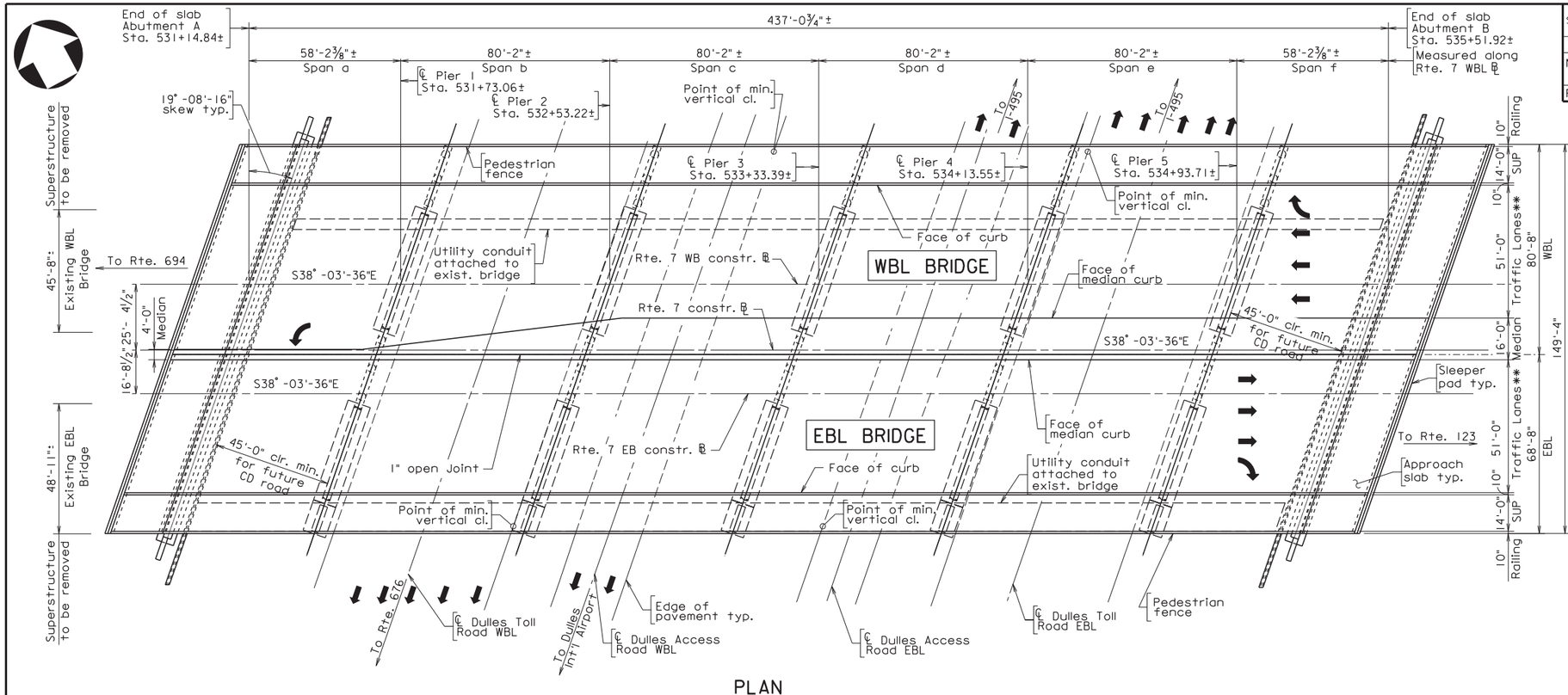

PLAN

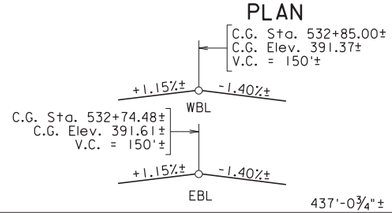

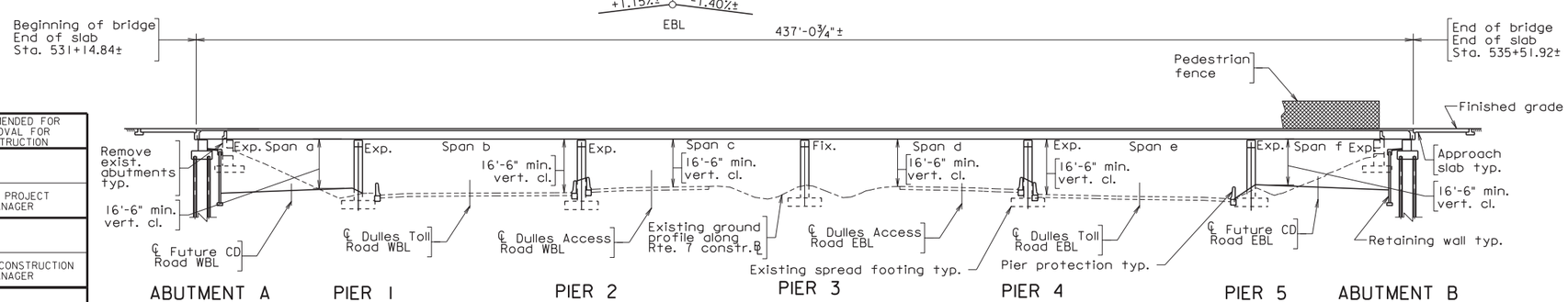

DEVELOPED SECTION ALONG RTE. 7 WBL ℄

DESIGN EXCI

None.

GENERAL NOTES:

The original approved sheet, including original signatures, is filed in the VDOT Central Office. Any misuse of electronic files, including scanned signatrues is illegal. Violators will be prosecuted to the full extent of the applicable laws.

Width: 14'-0" SUP, 51'-0" roadway, 16'-0" median, 51'-0" roadway, 14'-0" SUP. Overall width 147'-8" face-to-face of rails.

Span layout: 58' - 80' - 80' - 80' - 80' - 58' continuous steel plate girder spans.

Capacity: HS20-44 loading and alternate military loading for existing piers.
HL-93 loading for new superstructure, abutments, and new piers.

Specifications:

Construction: Virginia Department of Transportation Road and Bridge Specifications, 2007.

Design: AASHTO LRFD Bridge Design Specifications, 6th Edition, 2012; and VDOT Modifications.
AASHTO Standard Specifications for Highway Bridges, 16th Edition, 1996; 1997 and 1998 Interim Specifications; and VDOT modifications.

Standards: Virginia Department of Transportation Road and Bridge Standards, 2008.

These plans are incomplete unless accompanied by the Supplemental Specifications and Special Provisions included in the contract documents.

This project shall be constructed in accordance with the Virginia Department of Transportation Work Area Protection Manual, June 2011 and latest revisions.

Bridge No. of existing bridges are 1132 and 1133 and Plan No. is 189-08 and 189-08A.

These plans are prepared based on survey and the information shown on the As-Built bridge plans No. 189-08 and 189-08A. A copy of the As-Built Plans can be obtained from VDOT - Northern VA District Structure and Bridge Section.

The existing structure is designated a Type B structure in accordance with Sec. 411.

Note:
The bridge plan has been oriented to match the roadway stationing.
The substructure designation in this plan has been reversed in relation to the As-built bridge plans.

b189088001.dgn

RECOMMENDED FOR APPROVAL FOR CONSTRUCTION

VDOT PROJECT MANAGER

DISTRICT CONSTRUCTION MANAGER

WHITMAN REQUARDT & ASSOCIATES RICHMOND, VA STRUCTURAL ENGINEER

PLANS BY:	WRA
COORDINATED:	xxx
SUPERVISED:	Jeremy Schlussel
DESIGNED:	David Nizamoff
DRAWN:	David Nizamoff
CHECKED:	James Guinther

Legend:
SUP - Shared Use Path
* - Minimum horizontal clearance
** - Width including shoulders

PRELIMINARY PLANS
THESE PLANS NOT TO BE USED FOR CONSTRUCTION

Scale: 1" = 25'

No.	Description	Date

REVISIONS

For Table of Revisions, see Sheet 2.

VDOT

COMMONWEALTH OF VIRGINIA
DEPARTMENT OF TRANSPORTATION

PROPOSED BRIDGE WIDENING ON RTE. 7 OVER DULLES TOLL ROAD AND AIRPORT ACCESS HIGHWAY
FAIRFAX COUNTY - 1.9 MI. W. INT. RTE. 495
PROJ. 0007-029-139, B617, B618

Recommended for Approval: _____ D.B. Project Manager Date

Approved: _____ Chief Engineer

Date: March 9, 2015

© 2015, Commonwealth of Virginia

189-08B
Sheet 1 of 9

STATE	FEDERAL AID ROUTE	FEDERAL AID PROJECT	STATE ROUTE	STATE PROJECT	SHEET NO.
VA.	—	—	7	0007-029-139, B617, B618	11(2)

WAGMAN
BRIDGING GENERATIONS · SINCE 1902
rda
WR&A

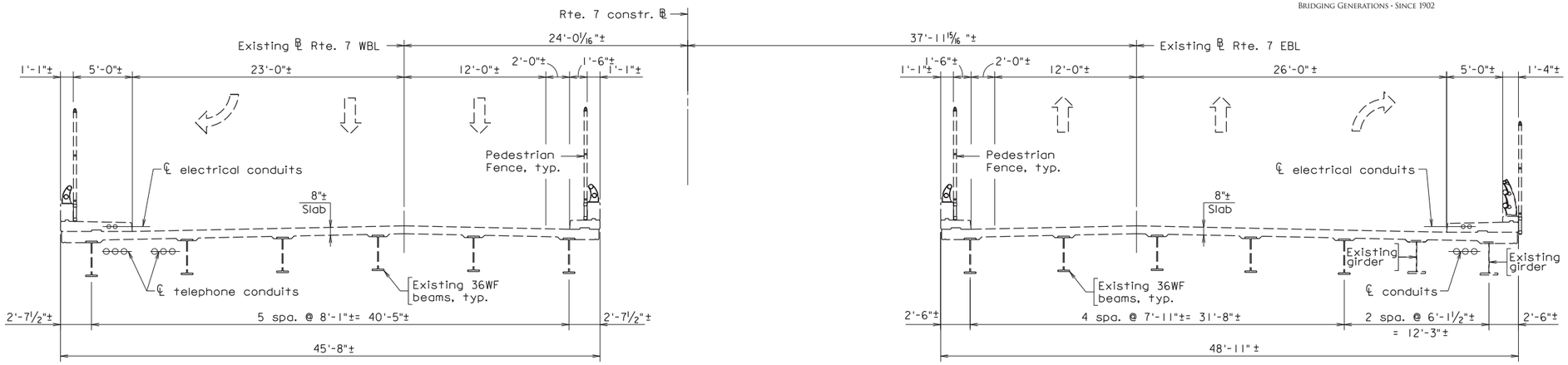

EXISTING TRANSVERSE SECTION

Note:
Existing bridge dimensions shown are from as-built plans.

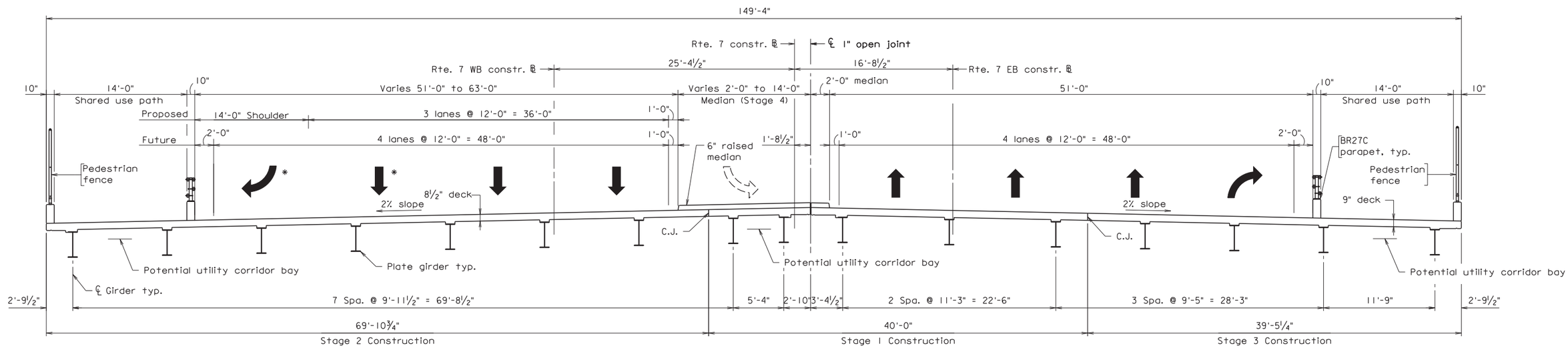

PROPOSED TRANSVERSE SECTION

* WB lane arrows shown for future lane configuration.

b18908B002.dgn

Legend:

- - - - - Existing structure

——— - New structure

C.J. = construction joint

Scale: 3/16" = 1'-0"

© 2015, Commonwealth of Virginia

PRELIMINARY PLANS
THESE PLANS NOT TO BE USED FOR CONSTRUCTION

WHITMAN REQUARDT & ASSOCIATES
RICHMOND, VA
STRUCTURAL ENGINEER

COMMONWEALTH OF VIRGINIA
DEPARTMENT OF TRANSPORTATION
STRUCTURE AND BRIDGE DIVISION

TRANSVERSE SECTION

Designed: DAN Drawn: DAN Checked: JAG	Date	Plan No.	Sheet No.
	MAR. 2015	189-08B	2 OF 9

STATE	FEDERAL AID ROUTE	FEDERAL AID PROJECT	STATE ROUTE	STATE PROJECT	SHEET NO.
VA.	—	————	7	0007-029-139, BXXX	11(6)

WAGMAN
BRIDGING GENERATIONS · SINCE 1902
rda
WR&A

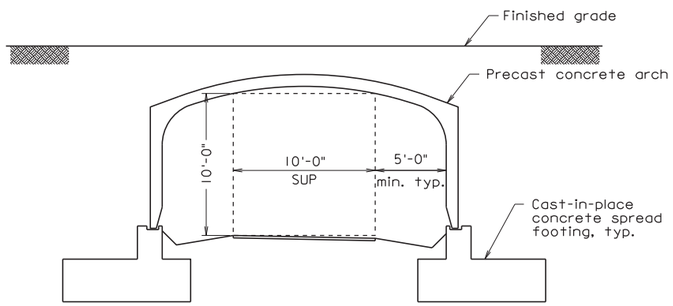

TYPICAL PEDESTRIAN UNDERPASS

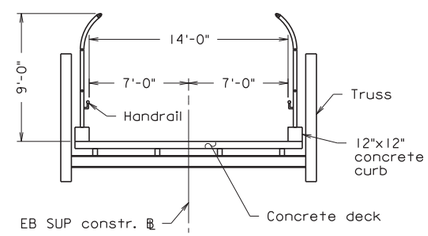

TYPICAL SECTION PEDESTRIAN OVERPASS

PEDESTRIAN UNDERPASSES

DESCRIPTION	VA STRUCTURE NO.	FEDERAL I.D.
Ramp from WB 267 to WB 7 (Ramp I)	1932	30426
Ramp from WB 267 to Rte. 7 (Ramp H)	1933	30427
Ramp from WB 7 to WB 267 (Ramp F)	1934	30428
Ramp from EB 267 to WB 7 (Ramp C) and Ramp from WB 7 to EB 267 (Ramp B)	1935	30429

PEDESTRIAN OVERPASSES

DESCRIPTION	VA STRUCTURE NO.	FEDERAL I.D.
Ramp from EB 267 to EB 7 (Ramp A), Ramp from EB 267 to Rte. 7 (Ramp D), and Ramp from EB 7 to EB 267 (Ramp E)	1936	30430

Legend:
SUP = Shared Use Path
C.J. = Construction Joint

PRELIMINARY PLANS
THESE PLANS NOT TO BE USED FOR CONSTRUCTION

N:\DB45002\CADD\Bridge\b189088009-Transverse Section.dgn

WHITMAN REQUARDT & ASSOCIATES
RICHMOND, VA
STRUCTURAL ENGINEER

Scale: 3/16" = 1'-0"

© 2015, Commonwealth of Virginia

No.	Description	Date
	Revisions	

COMMONWEALTH OF VIRGINIA
DEPARTMENT OF TRANSPORTATION
STRUCTURE AND BRIDGE DIVISION

TRANSVERSE SECTION

Designed: DAN	Date	Plan No.	Sheet No.
Drawn: DAN	MAR. 2015	XXX-XX	6 OF 9
Checked: JAG			

STATE	FEDERAL AID ROUTE	FEDERAL AID PROJECT	STATE ROUTE	STATE PROJECT	SHEET NO.
VA.	—	———	7	0007-029-139, B617, B618	11(3)

WAGMAN
BRIDGING GENERATIONS · SINCE 1902
rda
WR&A

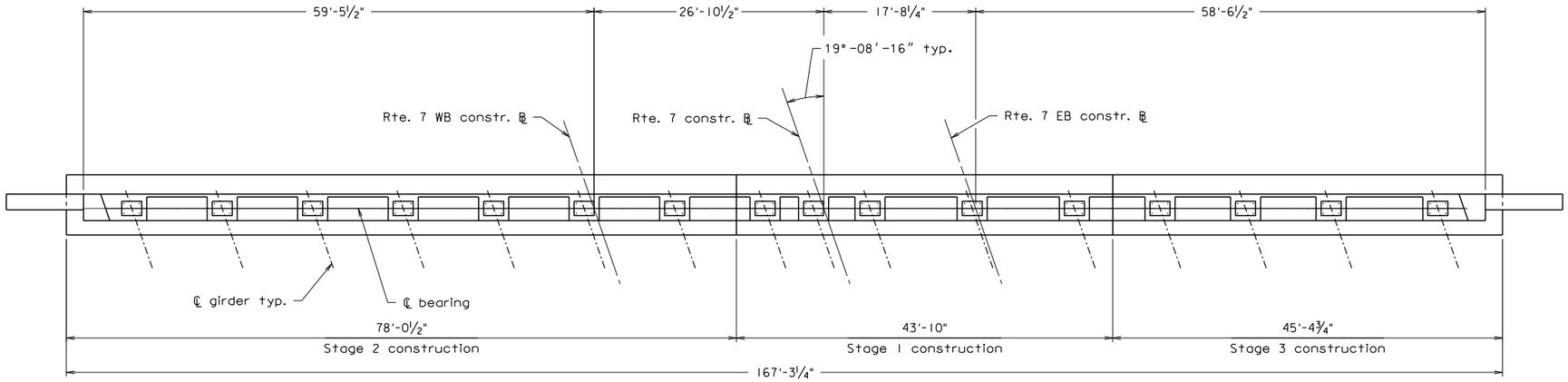

PLAN

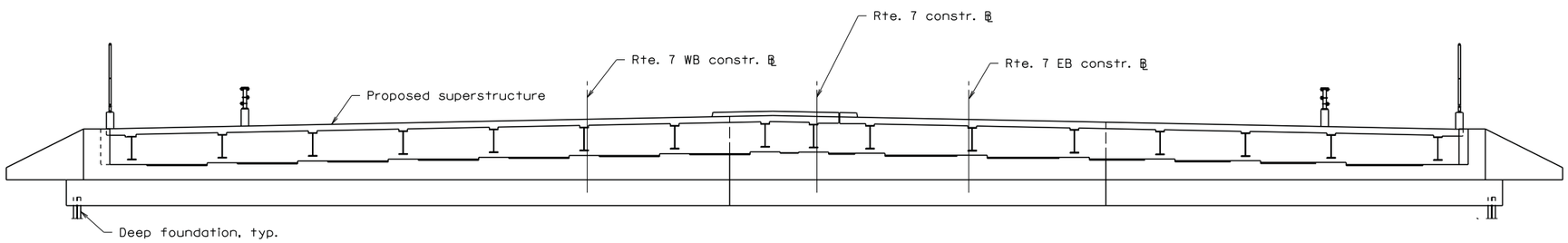

Note:
Retaining wall not shown.

ELEVATION

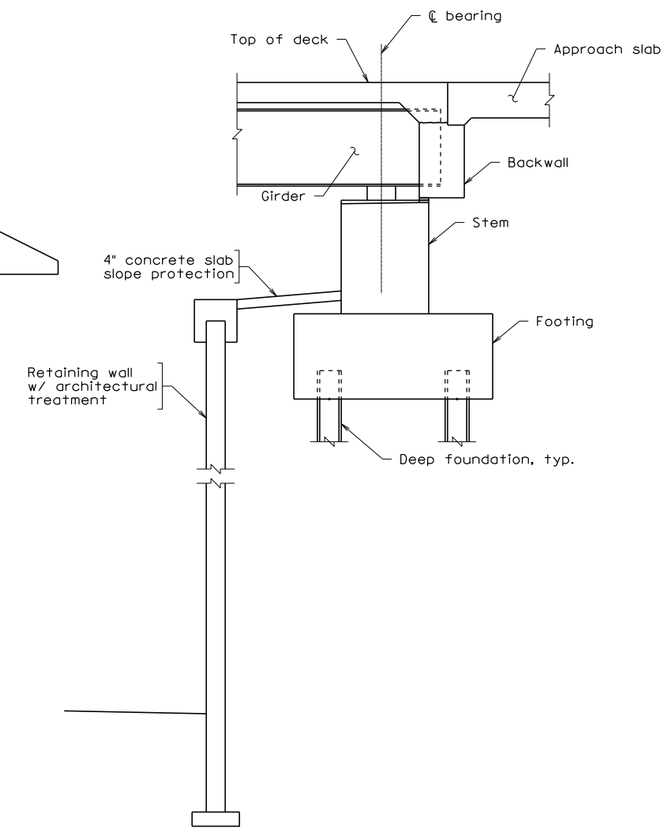

SECTION
Scale: ⅜" = 1'-0"

N:\DB45011\CADD\Bridge\b18908B003-Abutment Details.dgn

WHITMAN REQUARDT & ASSOCIATES
RICHMOND, VA
STRUCTURAL ENGINEER

Scale: ⅛" = 1'-0" unless otherwise noted.

PRELIMINARY PLANS
THESE PLANS NOT TO BE USED FOR CONSTRUCTION

© 2015, Commonwealth of Virginia

No.	Description	Date
	Revisions	

COMMONWEALTH OF VIRGINIA
DEPARTMENT OF TRANSPORTATION

STRUCTURE AND BRIDGE DIVISION

TYPICAL ABUTMENT PLAN, ELEVATION, AND SECTION

Designed: DAN	Date	Plan No.	Sheet No.
Drawn: DAN	MAR. 2015	189-08B	3 of 9
Checked: JAG			

STATE	FEDERAL AID ROUTE	FEDERAL AID PROJECT	STATE ROUTE	STATE PROJECT	SHEET NO.
VA.	—	—	7	0007-029-139, B617, B618	11(4)

WAGMAN
BRIDGING GENERATIONS · SINCE 1902
rda
WR&A

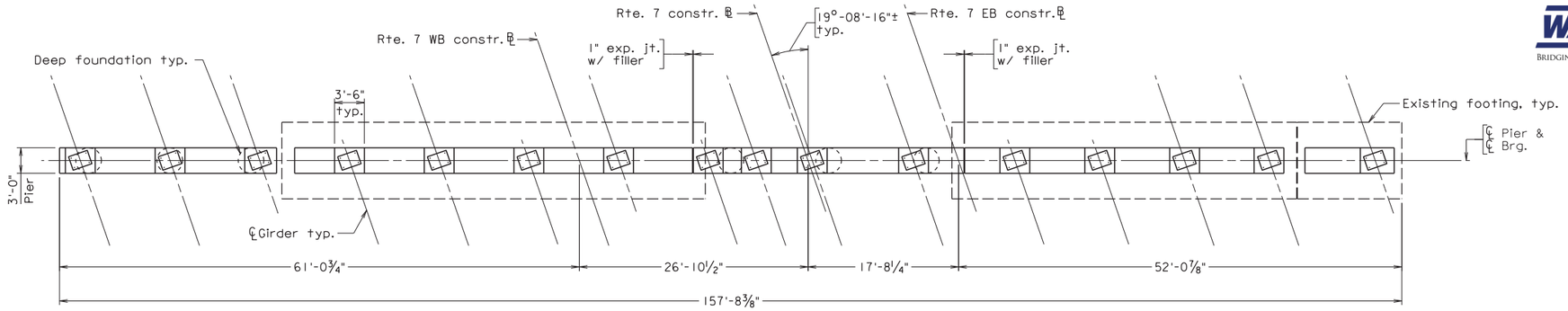

PLAN

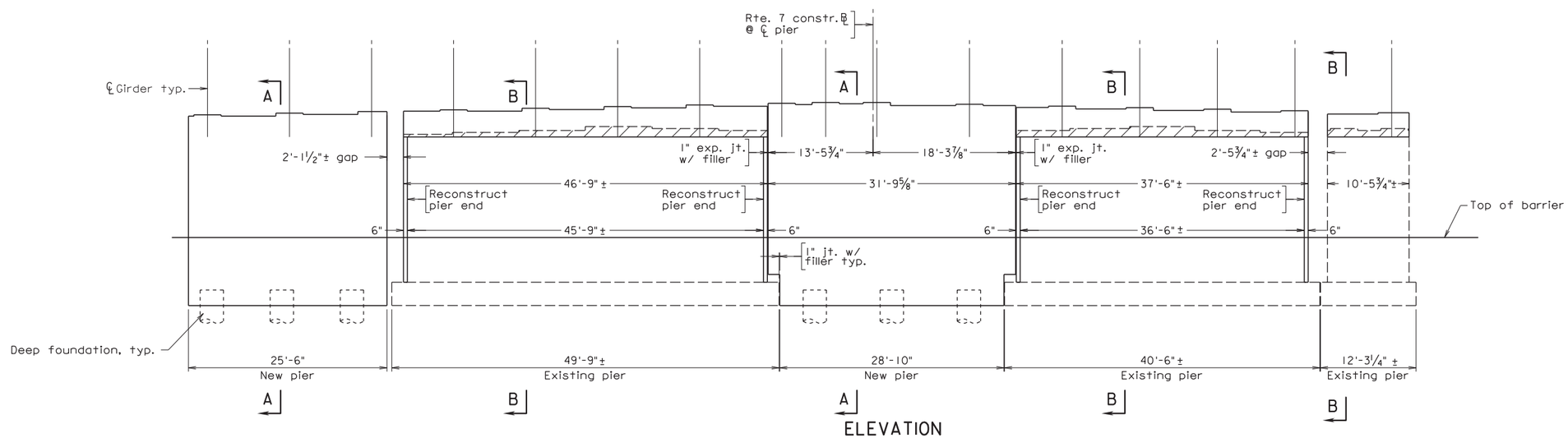

ELEVATION

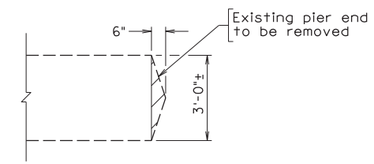

DEMOLITION

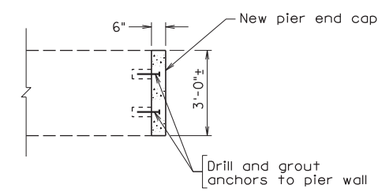

PROPOSED

PIER END RECONSTRUCTION DETAIL
Scale: ⅜" = 1'-0"

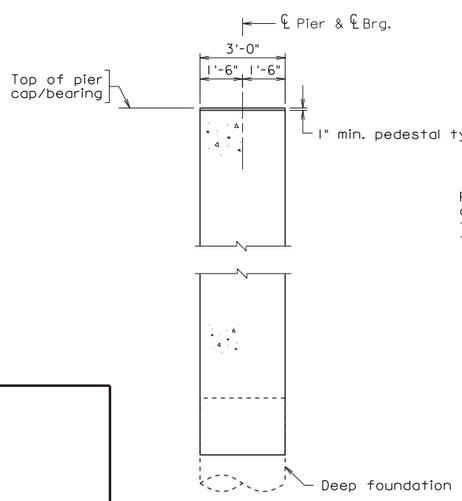

SECTION A-A
TYPICAL NEW PIER
Scale: ⅜" = 1'-0"

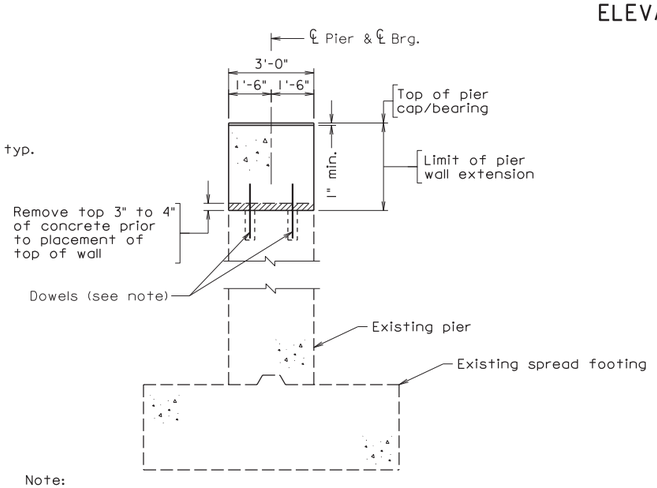

Note:
Pier 3 has fixed bearings. Dowels will be designed for longitudinal forces at fixed pier.

SECTION B-B
TYPICAL PIER MODIFICATION
Scale: ⅜" = 1'-0"

Legend:
- Existing structure
- Demo structure
- Completed structure

Scale: ⅛" = 1'-0" U.N.O.

© 2015, Commonwealth of Virginia

PRELIMINARY PLANS
THESE PLANS NOT TO BE USED FOR CONSTRUCTION

WHITMAN REQUARDT & ASSOCIATES
RICHMOND, VA
STRUCTURAL ENGINEER

COMMONWEALTH OF VIRGINIA
DEPARTMENT OF TRANSPORTATION
STRUCTURE AND BRIDGE DIVISION

TYPICAL PIER MODIFICATIONS

Designed: DAN	Date	Plan No.	Sheet No.
Drawn: DAN	MAR. 2015	189-08B	4 of 9
Checked: JAG			

b189088005.dgn

STATE	FEDERAL AID ROUTE	FEDERAL AID PROJECT	STATE ROUTE	STATE PROJECT	SHEET NO.
VA.	—	-	7	0007-029-139, BXXX	11(5)

NBIS Number:

UPC No. 82135

Federal Oversight Code: -

FHWA Construction and Scour Code:

DESIGN EXC

None.

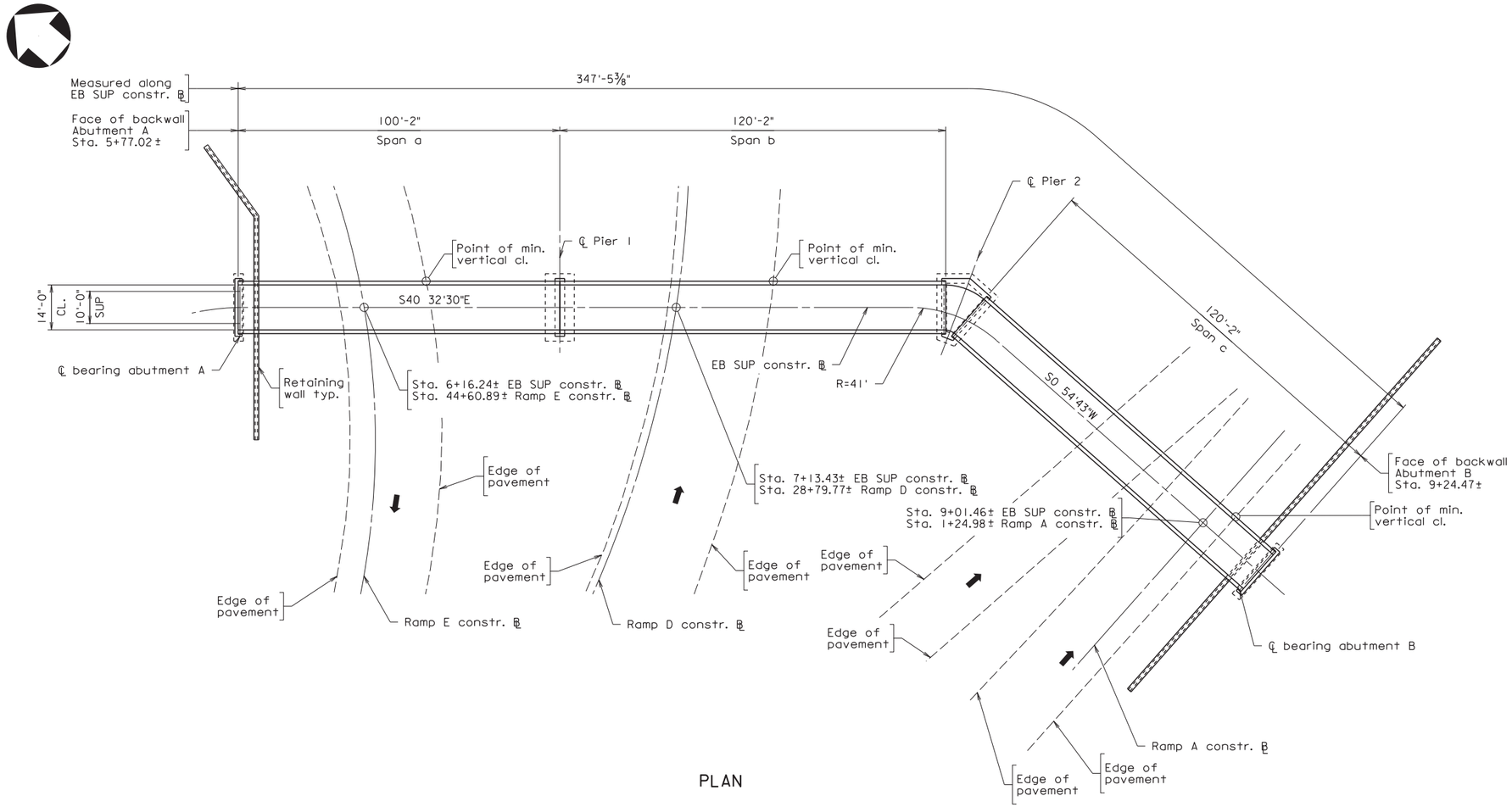

PLAN

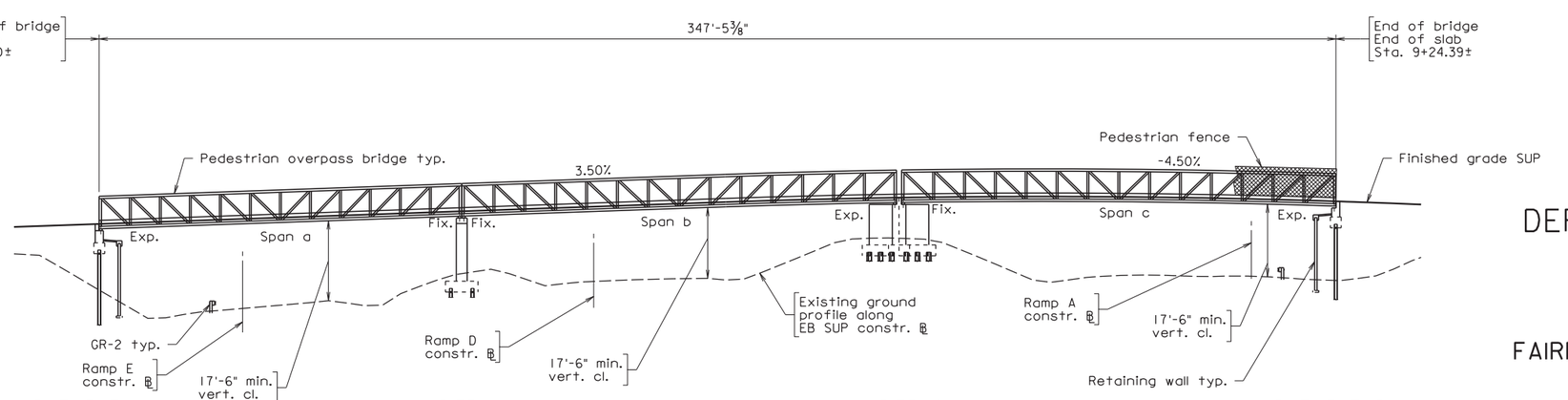

DEVELOPED SECTION ALONG SUP

Legend:

SUP - Shared Use Path
CL. - Clear

Scale: 1" = 20'

GENERAL NOTES:

The original approved sheet, including original signatures, is filed in the VDOT Central Office. Any misuse of electronic files, including scanned signatures is illegal. Violators will be prosecuted to the full extent of the applicable laws.

Width: 14'-0" face-to-face of handrail.

Span layout: 100' - 120' - 120' simple span prefabricated steel truss.

Capacity: 90 psf Pedestrian Live Loading. H-10 Vehicle Loading.

Specifications:

Construction: Virginia Department of Transportation Road and Bridge Specifications, 2007.

Design: AASHTO LRFD Bridge Design Specifications, 6th Edition, 2012; and VDOT Modifications.

LRFD Guide Specifications for Design of Pedestrian Bridges, 2nd Edition, 2009.

Standards: Virginia Department of Transportation Road and Bridge Standards, 2008.

These plans are incomplete unless accompanied by the Supplemental Specifications and Special Provisions included in the contract documents.

This project is to be constructed in accordance with the Virginia Department of Transportation Work Area Protection Manual, June 2011 and latest revisions.

RECOMMENDED FOR APPROVAL FOR CONSTRUCTION

VDOT PROJECT MANAGER

DISTRICT CONSTRUCTION MANAGER

WHITMAN REQUARDT & ASSOCIATES RICHMOND, VA STRUCTURAL ENGINEER

PLANS BY:	WRA
COORDINATED:	
SUPERVISED:	Jeremy Schlussel
DESIGNED:	David Nizamoff
DRAWN:	David Nizamoff
CHECKED:	James Guinther

PRELIMINARY PLANS

THESE PLANS NOT TO BE USED FOR CONSTRUCTION

No.	Description	Date

REVISIONS

For Table of Revisions, see Sheet 2.

VDOT

COMMONWEALTH OF VIRGINIA
DEPARTMENT OF TRANSPORTATION
PROPOSED BRIDGE ON

EASTBOUND SHARED USE PATH OVER RAMPS E, D, AND A
FAIRFAX COUNTY - 1.9 MI. W. INT. RTE. 495
PROJ. 0007-029-139, BXXX

Recommended for Approval: _____ D.B. Project Manager _____ Date

Approved: _____ Chief Engineer _____ Date

XXX-XX

Date: March 9, 2015

© 2015, Commonwealth of Virginia

Sheet 5 of 9

N:\DB45011\CADD\Bridge\b189088006-Ped Plan and Elevation.dgn

STATE	FEDERAL AID ROUTE	FEDERAL AID PROJECT	STATE ROUTE	STATE PROJECT	SHEET NO.
VA.	—	———	7	0007-029-139, BXXX	11(7)

WAGMAN
BRIDGING GENERATIONS · SINCE 1902
rda
WR&A

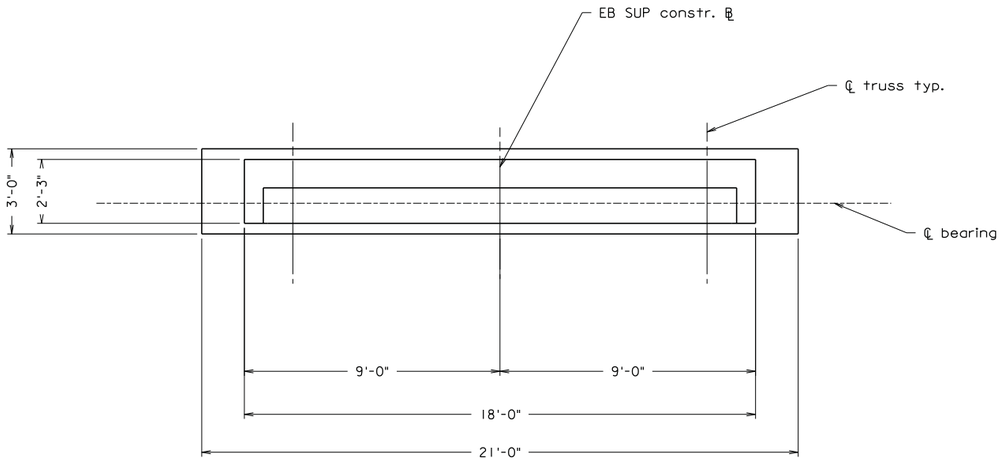

PLAN

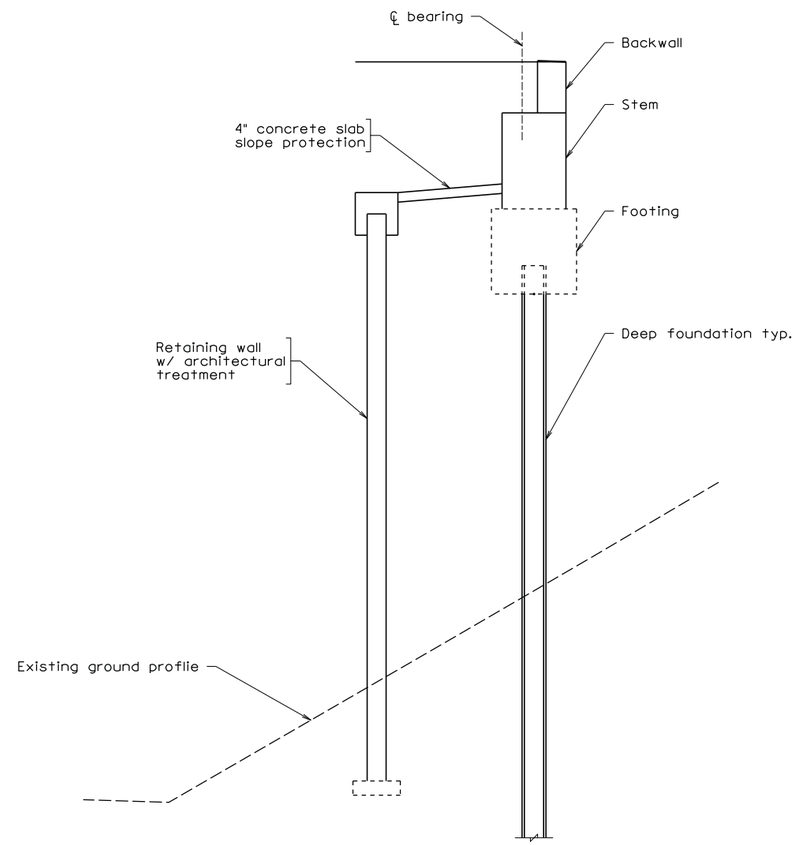

SECTION A-A

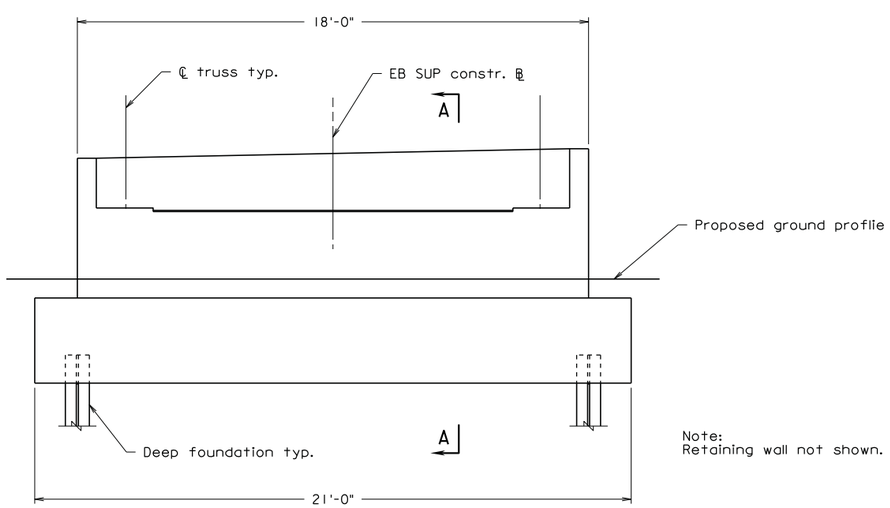

ELEVATION

Note:
Retaining wall not shown.

Legend:
SUP = Shared Use Path

PRELIMINARY PLANS

THESE PLANS NOT TO BE USED FOR CONSTRUCTION

Scale: 3/8" = 1'-0"

© 2015, Commonwealth of Virginia

No.	Description	Date

Revisions

COMMONWEALTH OF VIRGINIA
DEPARTMENT OF TRANSPORTATION

STRUCTURE AND BRIDGE DIVISION

PEDESTRIAN OVERPASS
TYPICAL ABUTMENT

Designed: DAN	Date	Plan No.	Sheet No.
Drawn: DAN	MAR. 2015	XXX-XX	7 of 9
Checked: JAG			

WHITMAN REQUARDT & ASSOCIATES
RICHMOND, VA
STRUCTURAL ENGINEER

N:\DB45011\CADD\Bridge\b18908B008-Ped Abut.dgn

STATE	FEDERAL AID ROUTE	FEDERAL AID PROJECT	STATE ROUTE	STATE PROJECT	SHEET NO.
VA.	—	———	7	0007-029-139, BXXX	11(8)

WAGMAN
BRIDGING GENERATIONS · SINCE 1902
rda
WR&A

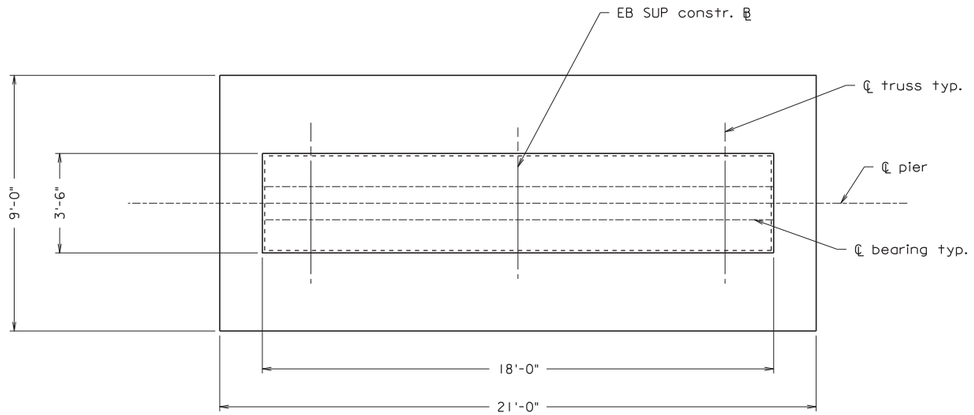

PLAN

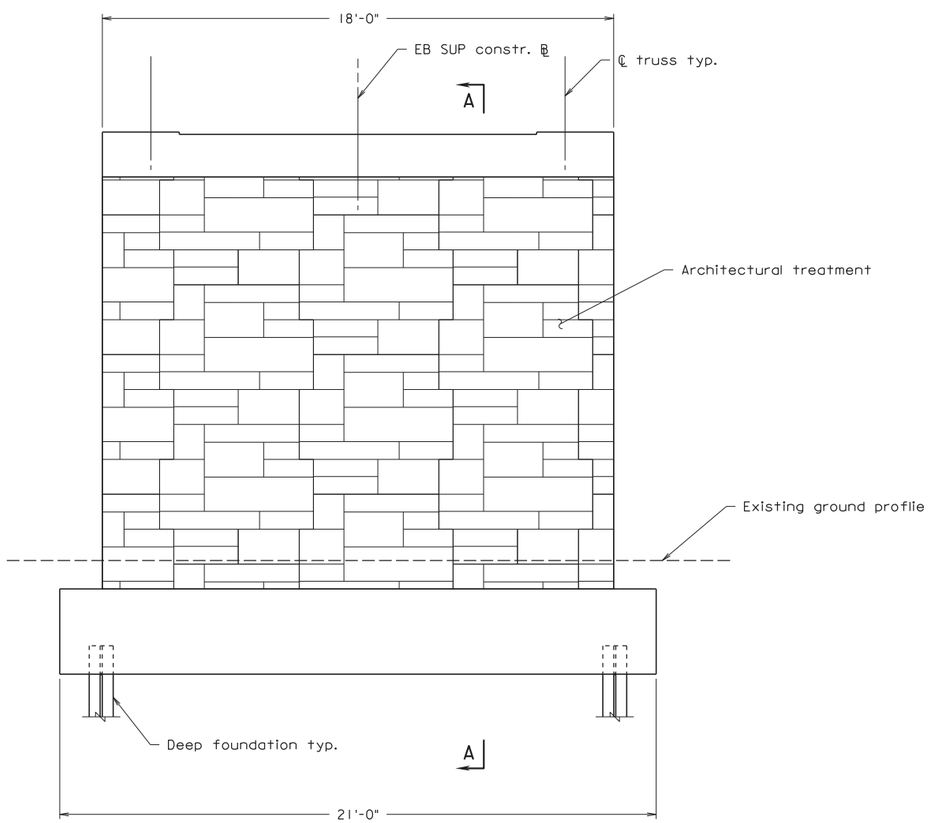

ELEVATION

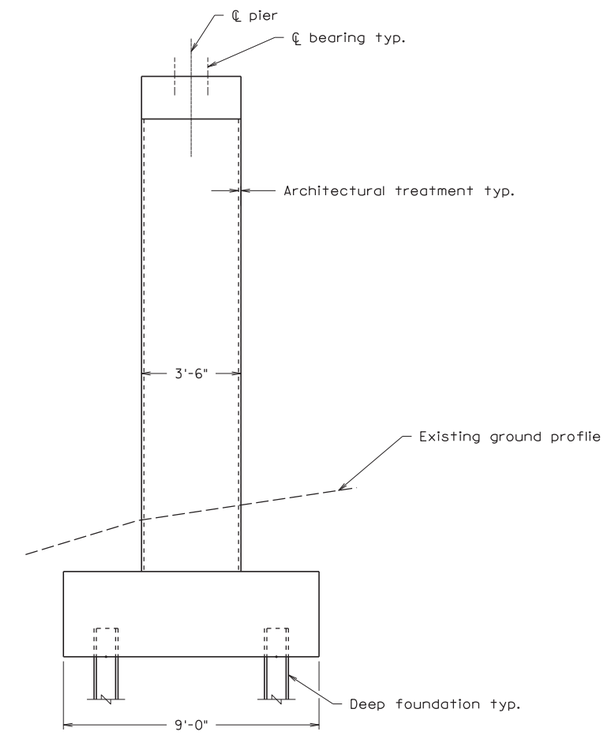

SECTION A-A

Legend:
SUP = Shared Use Path

PRELIMINARY PLANS
THESE PLANS NOT TO BE USED FOR CONSTRUCTION

Scale: 3/8" = 1'-0"

© 2015, Commonwealth of Virginia

No.	Description	Date
	Revisions	

COMMONWEALTH OF VIRGINIA
DEPARTMENT OF TRANSPORTATION

STRUCTURE AND BRIDGE DIVISION

PEDESTRIAN OVERPASS
PIER 1

Designed: DAN	Date	Plan No.	Sheet No.
Drawn: DAN Checked: JAG	MAR. 2015	XXX-XX	8 of 9

WHITMAN REQUARDT & ASSOCIATES
RICHMOND, VA
STRUCTURAL ENGINEER

N:\DB45011\CADD\Bridge\b18908B007-Ped Pier.dgn

STATE	FEDERAL AID ROUTE	FEDERAL AID PROJECT	STATE ROUTE	STATE PROJECT	SHEET NO.
VA.	—	————	7	0007-029-139, BXXX	11(9)

WAGMAN
BRIDGING GENERATIONS · SINCE 1902
rda
WR&A

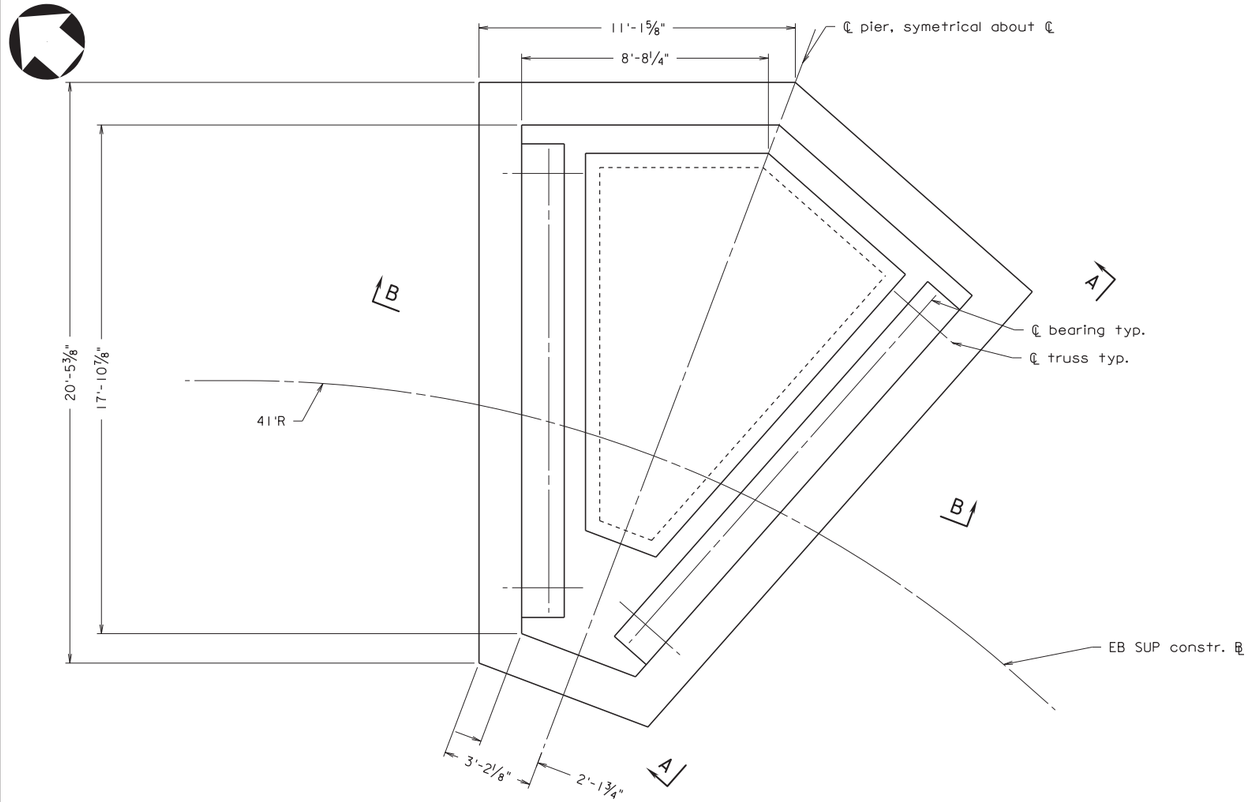

PLAN

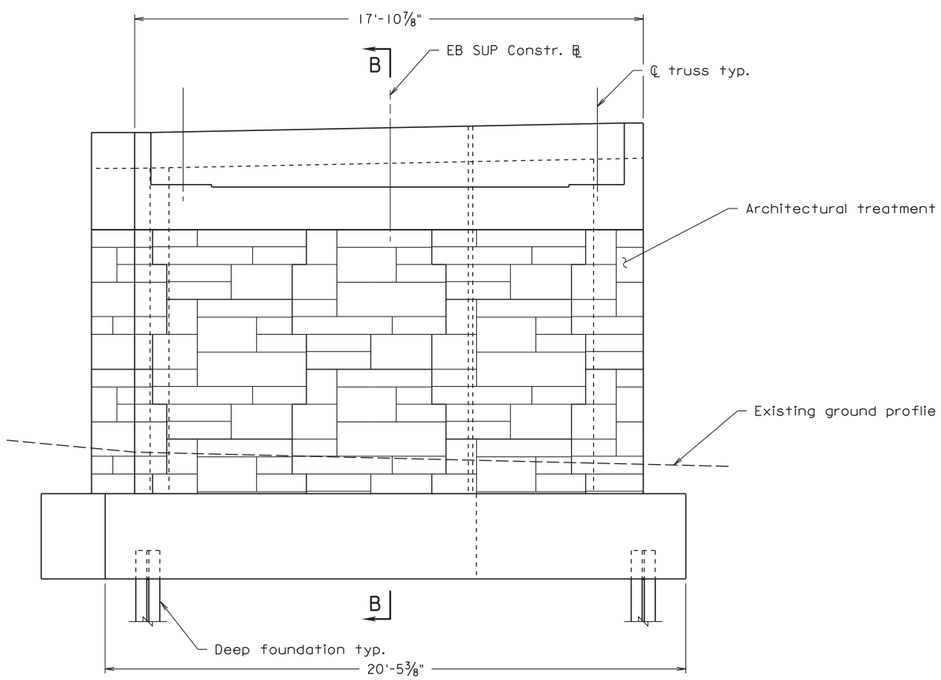

ELEVATION VIEW A-A

Scale: ⅜" = 1'-0"

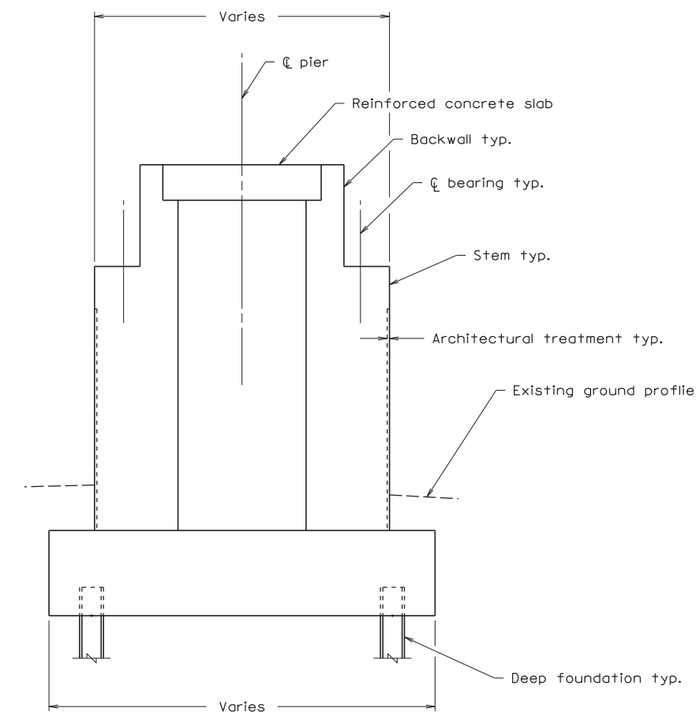

SECTION B-B

Legend:
SUP = Shared Use Path

PRELIMINARY PLANS

THESE PLANS NOT TO BE USED FOR CONSTRUCTION

No.	Description	Date

Revisions

COMMONWEALTH OF VIRGINIA
DEPARTMENT OF TRANSPORTATION

STRUCTURE AND BRIDGE DIVISION

PEDESTRIAN OVERPASS
PIER 2

Designed: DAN	Date	Plan No.	Sheet No.
Drawn: DAN Checked: JAG	MAR. 2015	XXX-XX	9 of 9

WHITMAN REQUARDT & ASSOCIATES
RICHMOND, VA
STRUCTURAL ENGINEER

© 2015, Commonwealth of Virginia

N:\DB45011\CADD\Bridge\b18908B010-Ped Pier2.dgn

4.2.4 Proposal Schedule

Volume II

Rt. 7 Widening and Bridge Rehab over DTR - WBS | Classic WBS Layout | 06-Mar-15 12:54

Activity ID	Activity Name	Planned Duration	Start	Finish	Calendar	Total Float
Rt. 7 Widening and Bridge Rehab over DTR - WBS		572.0d	25-Jun-15	01-Sep-17		0.0d
Milestones and General Conditions		572.0d	25-Jun-15	01-Sep-17		0.0d
Milestones		572.0d	25-Jun-15	01-Sep-17		0.0d
Project Milestones		572.0d	25-Jun-15	01-Sep-17		0.0d
A1000	Notice to Proceed	0.0d	25-Jun-15		7 Day	-0.1d
A1010	Construction Start	0.0d	10-Nov-15		7 Day	78.1d
A1020	Substantial Completion of Design	0.0d		29-Mar-16	7 Day	35.0d
A1030	Final Completion (Contract = 01-SEP-2017)	0.0d		01-Sep-17	7 Day	0.0d
Bridge Milestones		454.0d	07-Dec-15	01-Sep-17		0.0d
A1070	Start Construction Phase 1 Bridge	0.0d	07-Dec-15		7 Day	634.0d
A1160	Completion of Phase 1	0.0d		24-Aug-16	7 Day	0.0d
A1130	Completion of Phase 2	0.0d		28-Feb-17	7 Day	0.0d
A1140	Completion of Phase 3	0.0d		07-Aug-17	7 Day	0.0d
A9640	Completion of Phase 4	0.0d		01-Sep-17	7 Day	0.0d
General Conditions		572.0d	25-Jun-15	01-Sep-17		0.0d
Entire Porject		572.0d	25-Jun-15	01-Sep-17		0.0d
A1200	General Conditions: Project Management through Final Com	0.0d	25-Jun-15	25-Jun-15	7 Day	799.9d
A1210	General Conditions: QA/QC to Substantial Completion	0.0d	10-Nov-15	10-Nov-15	7 Day	661.0d
A1250	Final Punchlist/Demoblization	10.0d	22-Aug-17	31-Aug-17	7 Day	0.9d
A1190	General Conditions: Survey through Substantial Completion	661.0d	10-Nov-15	01-Sep-17	7 Day	0.0d
Preconstruction		571.0d	25-Jun-15	31-Aug-17		1.0d
Design		571.0d	25-Jun-15	31-Aug-17		1.0d
Structures and Bridges		199.0d	25-Jun-15	29-Mar-16		373.0d
Route 7 Bridge		179.0d	25-Jun-15	01-Mar-16		393.0d
D1000	Stage I Design (TS&L)	7.0d	25-Jun-15	06-Jul-15	Standard 5-Day Workwe	0.0d
D1010	SFC Stage I Design (VDOT, FHWA, MWAA, Fairfax)	5.0d	07-Jul-15	13-Jul-15	Standard 5-Day Workwe	07-Jul-15
D1020	R/C Stage I Design (VDOT, FHWA, MWAA, Fairfax)	16.0d	14-Jul-15	04-Aug-15	Standard 5-Day Workwe	14-Jul-15
D1021	Stage I Design (WMATA)	30.0d	07-Jul-15	05-Aug-15	7 Day	07-Jul-15
D1060	Stage II Design - Substructure	57.0d	05-Aug-15	23-Oct-15	Standard 5-Day Workwe	27.0d
D1070	SFC Stage II Design - Substructure (VDOT, FHWA, MWAA, F	5.0d	26-Oct-15	30-Oct-15	Standard 5-Day Workwe	27.0d
D1030	Stage II Design - Superstructure	65.0d	05-Aug-15	04-Nov-15	Standard 5-Day Workwe	0.0d
D1040	SFC Stage II Design - Superstructure (VDOT, FHWA, MWAA	5.0d	05-Nov-15	11-Nov-15	Standard 5-Day Workwe	0.0d
D1080	R/C Stage II Design - Substructure (VDOT, FHWA, MWAA, F	16.0d	02-Nov-15	23-Nov-15	Standard 5-Day Workwe	27.0d
D1081	Stage II Design - Substructure (WMATA)	30.0d	26-Oct-15	24-Nov-15	7 Day	646.9d
D1050	R/C Stage II Design - Superstructure (VDOT, FHWA, MWAA,	16.0d	05-Nov-15	27-Nov-15	Standard 5-Day Workwe	0.0d
D1051	Stage II Design- Superstructure (WMATA)	30.0d	05-Nov-15	04-Dec-15	7 Day	636.9d
D1090	Final Stage II Design	43.0d	30-Nov-15	29-Jan-16	Standard 5-Day Workwe	0.0d
D1100	SFC Stage II Design (VDOT, FHWA, MWAA, Fairfax)	5.0d	01-Feb-16	05-Feb-16	Standard 5-Day Workwe	0.0d
D1110	R/C Stage II Design (VDOT, FHWA, MWAA, Fairfax)	16.0d	08-Feb-16	29-Feb-16	Standard 5-Day Workwe	1.0d
D1111	Final Stage II Design (WMATA)	30.0d	01-Feb-16	01-Mar-16	7 Day	0.0d
NW Quadrant SUP Underpasses and Headwalls		199.0d	25-Jun-15	29-Mar-16		373.0d
D1120	Stage I Design (TS&L) - Ramps F, H, and I	22.0d	25-Jun-15	27-Jul-15	Standard 5-Day Workwe	84.0d
D1130	SFC Stage I Design (VDOT, FHWA, MWAA, Fairfax)	5.0d	28-Jul-15	03-Aug-15	Standard 5-Day Workwe	84.0d
D1140	R/C Stage I Design (VDOT, FHWA, MWAA, Fairfax)	16.0d	04-Aug-15	25-Aug-15	Standard 5-Day Workwe	84.0d
D1131	Stage I Design (WMATA)	30.0d	28-Jul-15	26-Aug-15	7 Day	736.9d
D1150	Draft Stage II Design - Ramps F, H, and I	29.0d	26-Aug-15	06-Oct-15	Standard 5-Day Workwe	84.0d
D1160	SFC Draft Stage II Design (VDOT, FHWA, MWAA, Fairfax)	5.0d	07-Oct-15	13-Oct-15	Standard 5-Day Workwe	84.0d
D1161	Draft Stage II Design (WMATA)	30.0d	07-Oct-15	05-Nov-15	7 Day	665.9d
D1170	R/C Draft Stage II Design (VDOT, FHWA, MWAA, Fairfax)	16.0d	08-Jan-16	29-Jan-16	Standard 5-Day Workwe	25.0d
D1180	Final Stage II Design - Ramps F, H, and I	20.0d	01-Feb-16	26-Feb-16	Standard 5-Day Workwe	25.0d
D1190	SFC Final Stage II Design (VDOT, FHWA, MWAA, Fairfax)	4.0d	29-Feb-16	03-Mar-16	Standard 5-Day Workwe	25.0d
D1200	R/C Final Stage II Design (VDOT, FHWA, MWAA, Fairfax)	18.0d	04-Mar-16	29-Mar-16	Standard 5-Day Workwe	25.0d
D1191	Final Stage II Design (WMATA)	30.0d	29-Feb-16	29-Mar-16	7 Day	35.0d
NE Quadrant SUP Underpasses, Headwalls and Retaining Walls		197.0d	25-Jun-15	26-Mar-16		375.0d
D1210	Stage I Design (TS&L) - Ramps B and C	32.0d	25-Jun-15	10-Aug-15	Standard 5-Day Workwe	31.0d
D1220	SFC Stage I Design (VDOT, FHWA, MWAA, Fairfax)	5.0d	11-Aug-15	17-Aug-15	Standard 5-Day Workwe	31.0d
D1230	R/C Stage I Design (VDOT, FHWA, MWAA, Fairfax)	16.0d	18-Aug-15	09-Sep-15	Standard 5-Day Workwe	31.0d
D1221	Stage I Design (WMATA)	30.0d	11-Aug-15	09-Sep-15	7 Day	722.9d
D1240	Draft Stage II Design - Ramps B and C	74.0d	10-Sep-15	23-Dec-15	Standard 5-Day Workwe	31.0d
D1250	SFC Draft Stage II Design (VDOT, FHWA, MWAA, Fairfax)	4.0d	24-Dec-15	30-Dec-15	Standard 5-Day Workwe	31.0d
D1251	Stage II Design (WMATA)	30.0d	24-Dec-15	22-Jan-16	7 Day	587.9d
D1260	R/C Draft Stage II Design (VDOT, FHWA, MWAA, Fairfax)	16.0d	08-Jan-16	29-Jan-16	Standard 5-Day Workwe	26.0d
D1270	Final Stage II Design - Ramps B and C	19.0d	01-Feb-16	25-Feb-16	Standard 5-Day Workwe	26.0d
D1280	SFC Final Stage II Design (VDOT, FHWA, MWAA, Fairfax)	5.0d	26-Feb-16	03-Mar-16	Standard 5-Day Workwe	26.0d
D1290	R/C Final Stage II Design (VDOT, FHWA, MWAA, Fairfax)	16.0d	04-Mar-16	25-Mar-16	Standard 5-Day Workwe	27.0d
D1281	Final Stage II Design (WMATA)	30.0d	26-Feb-16	26-Mar-16	7 Day	38.0d
SE Quadrant SUP Pedestrian Bridges, Headwalls and Retaining Walls		197.0d	25-Jun-15	26-Mar-16		375.0d
D1300	Stage I Design (TS&L) - Ramps E, D and A	42.0d	25-Jun-15	24-Aug-15	Standard 5-Day Workwe	31.0d
D1310	SFC Stage I Design (VDOT, FHWA, MWAA, Fairfax)	5.0d	25-Aug-15	31-Aug-15	Standard 5-Day Workwe	31.0d
D1320	R/C Stage I Design (VDOT, FHWA, MWAA, Fairfax)	16.0d	01-Sep-15	23-Sep-15	Standard 5-Day Workwe	31.0d
D1311	Stage I Design (WMATA)	30.0d	25-Aug-15	23-Sep-15	7 Day	708.9d
D1330	Draft Stage II Design - Ramps E, D and A	64.0d	24-Sep-15	23-Dec-15	Standard 5-Day Workwe	31.0d

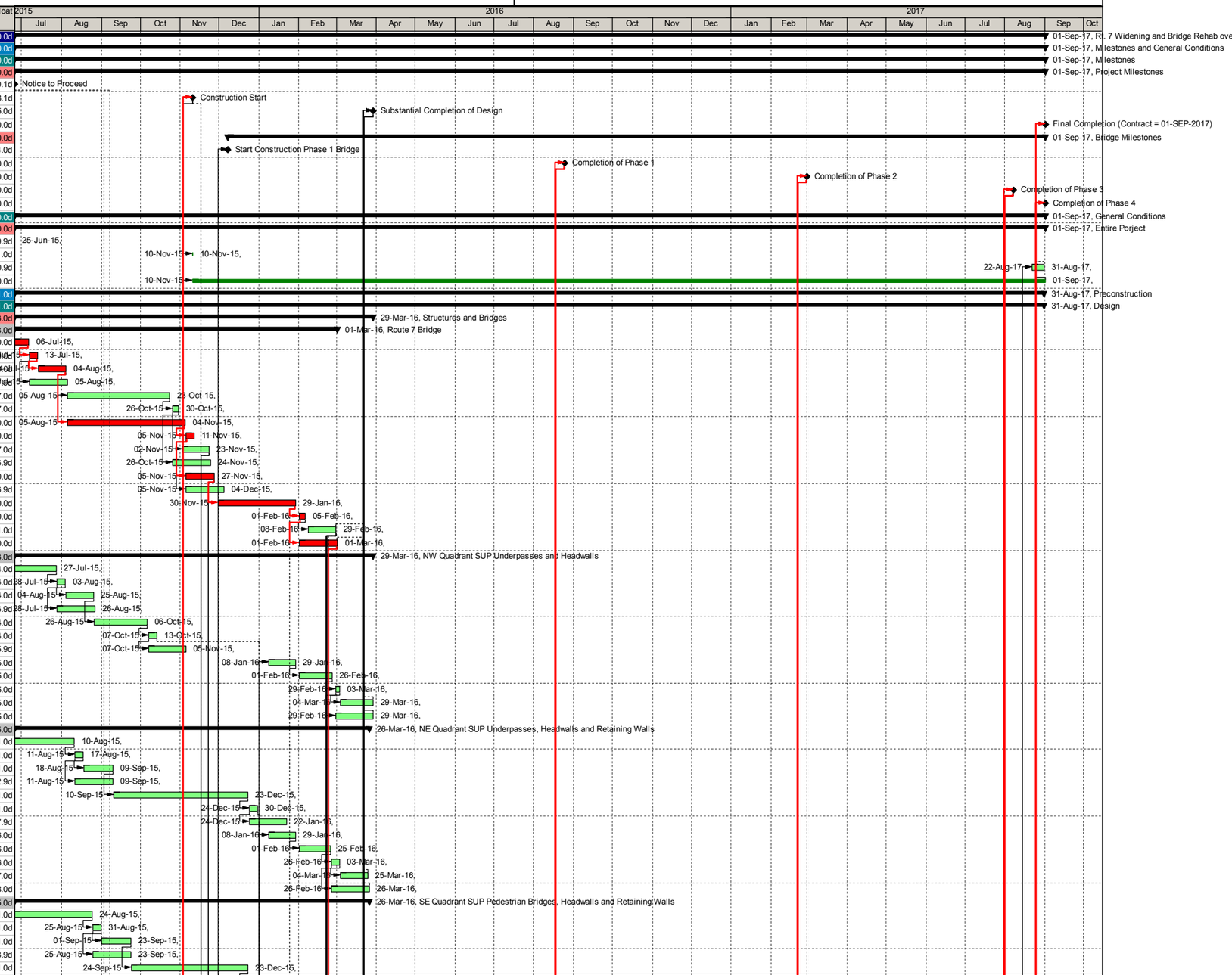

WAGMAN
MIDDLE EAST CONSTRUCTIONS - SINCE 1902

ABBREVIATIONS

A/C	Address Comments	SFA	Submit for Approval
R/A	Review and Approve	SFC	Submit for Comment
R/C	Review and Comment	FRPS	Form, Rebar, Pour, Strip

Activity ID	Activity Name	Planned Duration	Start	Finish	Calendar	Total Float
D1340	SFC Draft Stage II Design (VDOT, FHWA, MWAA, Fairfax)	4.0d	24-Dec-15	30-Dec-15	Standard 5-Day Workwe	31.0d
D1341	Draft Stage II Design (WMATA)	30.0d	24-Dec-15	22-Jan-16	7 Day	587.9d
D1350	R/C Draft Stage II Design (VDOT, FHWA, MWAA, Fairfax)	16.0d	08-Jan-16	29-Jan-16	Standard 5-Day Workwe	26.0d
D1360	Final Stage II Design - Ramps E, D and A	19.0d	01-Feb-16	25-Feb-16	Standard 5-Day Workwe	26.0d
D1370	SFC Final Stage II Design (VDOT, FHWA, MWAA, Fairfax)	5.0d	26-Feb-16	03-Mar-16	Standard 5-Day Workwe	26.0d
D1380	R/C Final Stage II Design (VDOT, FHWA, MWAA, Fairfax)	16.0d	04-Mar-16	25-Mar-16	Standard 5-Day Workwe	27.0d
D1371	Final Stage II Design (WMATA)	30.0d	26-Feb-16	26-Mar-16	7 Day	38.0d
Scope Validation		101.0d	25-Jun-15	12-Nov-15		0.0d
D1390	Design-Builder Documents Possible Scope Validation Items	119.0d	25-Jun-15	21-Oct-15	7 Day	-0.1d
D1400	Design-Builder Submits Possible Scope Validation Item Lette	1.0d	22-Oct-15	22-Oct-15	7 Day	-0.1d
D1410	Design-Builder Submits Cost and Time Impact Analysis	21.0d	23-Oct-15	12-Nov-15*	7 Day	-0.1d
Survey		67.0d	25-Jun-15	25-Sep-15		97.0d
D1420	Prepare Site Investigation Notification Letters	1.0d	25-Jun-15	25-Jun-15	Standard 5-Day Workwe	94.0d
D1430	R/C Site Investigation Notification Letters (VDOT, FHWA, MV	1.0d	26-Jun-15	26-Jun-15	Standard 5-Day Workwe	94.0d
D1440	A/C Site Investigation Notification Letters	1.0d	29-Jun-15	29-Jun-15	Standard 5-Day Workwe	94.0d
D1450	Property/ROW Research	3.0d	30-Jun-15	02-Jul-15	Standard 5-Day Workwe	94.0d
D1460	Distribute Site Investigation Notification Letters	11.0d	06-Jul-15	20-Jul-15	Standard 5-Day Workwe	094.0d
D1470	Recover Survey Control	3.0d	21-Jul-15	23-Jul-15	Standard 5-Day Workwe	94.0d
D1480	Supplemental Field Survey	10.0d	24-Jul-15	06-Aug-15	Standard 5-Day Workwe	94.0d
D1490	Topo Verification (SWM Basins, Roadway Tie-Ins)	5.0d	07-Aug-15	13-Aug-15	Standard 5-Day Workwe	94.0d
D1500	Perform Composite Survey (property line surveys and deeds	20.0d	14-Aug-15	11-Sep-15	Standard 5-Day Workwe	94.0d
D1510	Supplemental Utility Designation/Location	10.0d	14-Sep-15	25-Sep-15	Standard 5-Day Workwe	94.0d
Geotechnical		171.0d	25-Jun-15	18-Feb-16		401.0d
D1520	Prepare Soil Boring Plan	1.0d	25-Jun-15	25-Jun-15	Standard 5-Day Workwe	16.0d
D1530	R/C Soil Boring Plan (VDOT, FHWA, MWAA, Fairfax)	10.0d	25-Jun-15	09-Jul-15	Standard 5-Day Workwe	16.0d
D1540	A/C Soil Boring Plan	1.0d	10-Jul-15	10-Jul-15	Standard 5-Day Workwe	16.0d
D1550	Perform Soil Borings	20.0d	13-Jul-15	07-Aug-15	Standard 5-Day Workwe	16.0d
D1531	Soil Boring Plan (WMATA)	30.0d	09-Jul-15	08-Aug-15	7 Day	295.0d
D1560	Lab Work	20.0d	10-Aug-15	04-Sep-15	Standard 5-Day Workwe	16.0d
GER 1		118.0d	08-Sep-15	18-Feb-16		401.0d
D1570	Prepare Draft GER	15.0d	08-Sep-15	28-Sep-15	Standard 5-Day Workwe	26.0d
D1580	SFA Draft GER (Wagman)	5.0d	29-Sep-15	05-Oct-15	Standard 5-Day Workwe	26.0d
D1590	A/C Draft GER	4.0d	06-Oct-15	09-Oct-15	Standard 5-Day Workwe	26.0d
D1600	SFA Draft GER (VDOT, FHWA, MWAA, Fairfax)	1.0d	12-Oct-15	12-Oct-15	Standard 5-Day Workwe	26.0d
D1610	R/C Draft GER	16.0d	13-Oct-15	03-Nov-15	Standard 5-Day Workwe	53.0d
D1601	Draft GER (WMATA)	30.0d	12-Oct-15	10-Nov-15	7 Day	660.9d
D1620	Advance to Final GER	14.0d	04-Nov-15	23-Nov-15	Standard 5-Day Workwe	53.0d
D1630	SFA Final GER (Wagman)	3.0d	24-Nov-15	27-Nov-15	Standard 5-Day Workwe	53.0d
D1640	A/C Final GER	2.0d	30-Nov-15	01-Dec-15	Standard 5-Day Workwe	53.0d
D1650	SFA Final GER (VDOT, FHWA, MWAA, Fairfax)	1.0d	02-Dec-15	02-Dec-15	Standard 5-Day Workwe	53.0d
D1660	R/C Final GER	15.0d	03-Dec-15	23-Dec-15	Standard 5-Day Workwe	53.0d
D1651	Final GER (WMATA)	30.0d	02-Dec-15	31-Dec-15	7 Day	609.9d
D1670	A/C Final GER	22.0d	24-Dec-15	26-Jan-16	Standard 5-Day Workwe	53.0d
D1680	R/A Final GER	17.0d	27-Jan-16	18-Feb-16	Standard 5-Day Workwe	53.0d
GER 2		118.0d	08-Sep-15	18-Feb-16		401.0d
D1690	Prepare Draft GER	15.0d	08-Sep-15	28-Sep-15	Standard 5-Day Workwe	25.0d
D1700	SFA Draft GER (Wagman)	5.0d	29-Sep-15	05-Oct-15	Standard 5-Day Workwe	25.0d
D1710	A/C Draft GER	4.0d	06-Oct-15	09-Oct-15	Standard 5-Day Workwe	25.0d
D1720	SFA Draft GER (VDOT, FHWA, MWAA, Fairfax)	1.0d	12-Oct-15	12-Oct-15	Standard 5-Day Workwe	25.0d
D1730	R/C Draft GER	16.0d	13-Oct-15	03-Nov-15	Standard 5-Day Workwe	53.0d
D1721	Draft GER (WMATA)	30.0d	12-Oct-15	10-Nov-15	7 Day	660.9d
D1740	Advance to Final GER	14.0d	04-Nov-15	23-Nov-15	Standard 5-Day Workwe	53.0d
D1750	SFA Final GER (Wagman)	3.0d	24-Nov-15	27-Nov-15	Standard 5-Day Workwe	53.0d
D1760	A/C Final GER	2.0d	30-Nov-15	01-Dec-15	Standard 5-Day Workwe	53.0d
D1770	SFA Final GER (VDOT, FHWA, MWAA, Fairfax)	1.0d	02-Dec-15	02-Dec-15	Standard 5-Day Workwe	53.0d
D1780	R/C Final GER	15.0d	03-Dec-15	23-Dec-15	Standard 5-Day Workwe	53.0d
D1771	Final GER (WMATA)	30.0d	02-Dec-15	31-Dec-15	7 Day	609.9d
D1790	A/C Final GER	22.0d	24-Dec-15	26-Jan-16	Standard 5-Day Workwe	53.0d
D1800	R/A Final GER	17.0d	27-Jan-16	18-Feb-16	Standard 5-Day Workwe	53.0d
GER 3		118.0d	08-Sep-15	18-Feb-16		401.0d
D1810	Prepare Draft GER	15.0d	08-Sep-15	28-Sep-15	Standard 5-Day Workwe	16.0d
D1820	SFA Draft GER (Wagman)	5.0d	29-Sep-15	05-Oct-15	Standard 5-Day Workwe	16.0d
D1830	A/C Draft GER	4.0d	06-Oct-15	09-Oct-15	Standard 5-Day Workwe	16.0d
D1840	SFA Draft GER (VDOT, FHWA, MWAA, Fairfax)	1.0d	12-Oct-15	12-Oct-15	Standard 5-Day Workwe	16.0d
D1850	R/C Draft GER	16.0d	13-Oct-15	03-Nov-15	Standard 5-Day Workwe	53.0d
D1841	Draft GER (WMATA)	30.0d	12-Oct-15	10-Nov-15	7 Day	660.9d
D1860	Advance to Final GER	14.0d	04-Nov-15	23-Nov-15	Standard 5-Day Workwe	53.0d
D1870	SFA Final GER (Wagman)	3.0d	24-Nov-15	27-Nov-15	Standard 5-Day Workwe	53.0d
D1880	A/C Final GER	2.0d	30-Nov-15	01-Dec-15	Standard 5-Day Workwe	53.0d
D1890	SFA Final GER (VDOT, FHWA, MWAA, Fairfax)	1.0d	02-Dec-15	02-Dec-15	Standard 5-Day Workwe	53.0d
D1900	R/C Final GER	15.0d	03-Dec-15	23-Dec-15	Standard 5-Day Workwe	53.0d

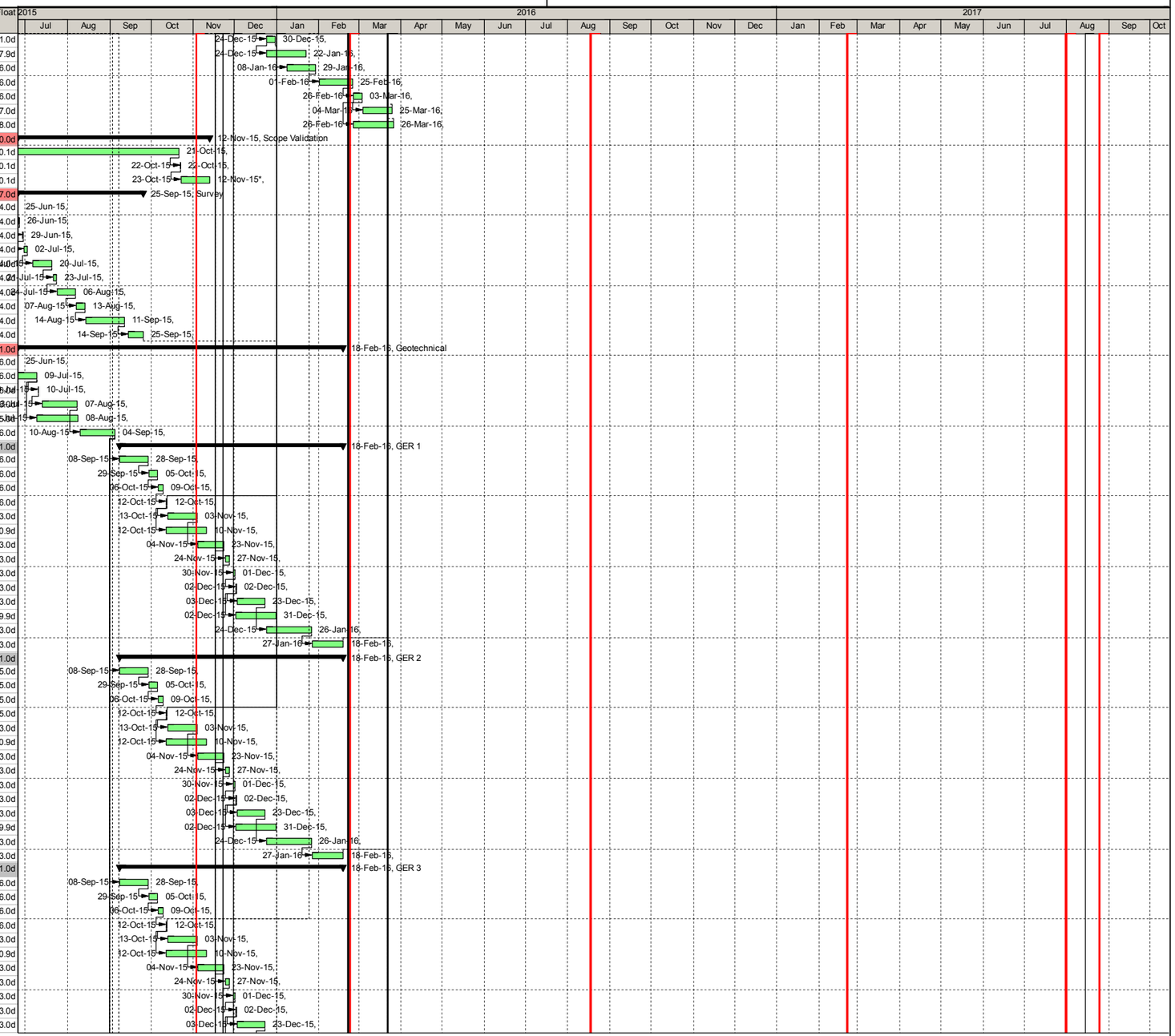

ABBREVIATIONS

A/C	Address Comments	SFA	Submit for Approval
R/A	Review and Approve	SFC	Submit for Comment
R/C	Review and Comment	FRPS	Form, Rebar, Pour, Strip

Activity ID	Activity Name	Planned Duration	Start	Finish	Calendar	Total Float
D1891	Final GER (WMATA)	30.0d	02-Dec-15	31-Dec-15	7 Day	609.9d
D1910	A/C Final GER	22.0d	24-Dec-15	26-Jan-16	Standard 5-Day Workwe	53.0d
D1920	R/A Final GER	17.0d	27-Jan-16	18-Feb-16	Standard 5-Day Workwe	53.0d
GER 4		118.0d	08-Sep-15	18-Feb-16		401.0d
D1930	Prepare Draft GER	15.0d	08-Sep-15	28-Sep-15	Standard 5-Day Workwe	23.0d
D1940	SFA Draft GER (Wagman)	5.0d	29-Sep-15	05-Oct-15	Standard 5-Day Workwe	23.0d
D1950	A/C Draft GER	4.0d	06-Oct-15	09-Oct-15	Standard 5-Day Workwe	23.0d
D1960	SFA Draft GER (VDOT, FHWA, MWAA, Fairfax)	1.0d	12-Oct-15	12-Oct-15	Standard 5-Day Workwe	23.0d
D1970	R/C Draft GER	16.0d	13-Oct-15	03-Nov-15	Standard 5-Day Workwe	53.0d
D1961	Draft GER (WMATA)	30.0d	12-Oct-15	10-Nov-15	7 Day	660.9d
D1980	Advance to Final GER	14.0d	04-Nov-15	23-Nov-15	Standard 5-Day Workwe	53.0d
D1990	SFA Final GER (Wagman)	3.0d	24-Nov-15	27-Nov-15	Standard 5-Day Workwe	53.0d
D2000	A/C Final GER	2.0d	30-Nov-15	01-Dec-15	Standard 5-Day Workwe	53.0d
D2010	SFA Final GER (VDOT, FHWA, MWAA, Fairfax)	1.0d	02-Dec-15	02-Dec-15	Standard 5-Day Workwe	53.0d
D2020	R/C Final GER	15.0d	03-Dec-15	23-Dec-15	Standard 5-Day Workwe	53.0d
D2011	Final GER (WMATA)	30.0d	02-Dec-15	31-Dec-15	7 Day	609.9d
D2030	A/C Final GER	22.0d	24-Dec-15	26-Jan-16	Standard 5-Day Workwe	53.0d
D2040	R/A Final GER	17.0d	27-Jan-16	18-Feb-16	Standard 5-Day Workwe	53.0d
GER 5		118.0d	08-Sep-15	18-Feb-16		401.0d
D2050	Prepare Draft GER	15.0d	08-Sep-15	28-Sep-15	Standard 5-Day Workwe	23.0d
D2060	SFA Draft GER (Wagman)	5.0d	29-Sep-15	05-Oct-15	Standard 5-Day Workwe	23.0d
D2070	A/C Draft GER	4.0d	06-Oct-15	09-Oct-15	Standard 5-Day Workwe	23.0d
D2080	SFA Draft GER (VDOT, FHWA, MWAA, Fairfax)	1.0d	12-Oct-15	12-Oct-15	Standard 5-Day Workwe	23.0d
D2090	R/C Draft GER	16.0d	13-Oct-15	03-Nov-15	Standard 5-Day Workwe	53.0d
D2081	Draft GER (WMATA)	30.0d	12-Oct-15	10-Nov-15	7 Day	660.9d
D2100	Advance to Final GER	14.0d	04-Nov-15	23-Nov-15	Standard 5-Day Workwe	53.0d
D2110	SFA Final GER (Wagman)	3.0d	24-Nov-15	27-Nov-15	Standard 5-Day Workwe	53.0d
D2120	A/C Final GER	2.0d	30-Nov-15	01-Dec-15	Standard 5-Day Workwe	53.0d
D2130	SFA Final GER (VDOT, FHWA, MWAA, Fairfax)	1.0d	02-Dec-15	02-Dec-15	Standard 5-Day Workwe	53.0d
D2140	R/C Final GER	15.0d	03-Dec-15	23-Dec-15	Standard 5-Day Workwe	53.0d
D2131	Final GER (WMATA)	30.0d	02-Dec-15	31-Dec-15	7 Day	609.9d
D2150	A/C Final GER	22.0d	24-Dec-15	26-Jan-16	Standard 5-Day Workwe	53.0d
D2160	R/A Final GER	17.0d	27-Jan-16	18-Feb-16	Standard 5-Day Workwe	53.0d
Preliminary Design		101.0d	25-Jun-15	12-Nov-15		471.0d
Roadway, Drainage, Landscaping and Noise		49.0d	25-Jun-15	01-Sep-15		523.0d
D2170	Verify/Review RFP Design - Prepare Preliminary Plans	4.0d	25-Jun-15	30-Jun-15	Standard 5-Day Workwe	102.0d
D2180	SFC Preliminary Plans (Wagman)	3.0d	01-Jul-15	06-Jul-15	Standard 5-Day Workwe	102.0d
D2190	A/C Preliminary Plans (Wagman)	2.0d	07-Jul-15	08-Jul-15	Standard 5-Day Workwe	102.0d
D2200	SFC Preliminary Plans (VDOT, FHWA, MWAA, Fairfax)	2.0d	09-Jul-15	10-Jul-15	Standard 5-Day Workwe	102.0d
D2210	R/C Preliminary Plans (VDOT, FHWA, MWAA, Fairfax)	15.0d	13-Jul-15	31-Jul-15	Standard 5-Day Workwe	102.0d
D2201	Preliminary Plans (WMATA)	30.0d	09-Jul-15	07-Aug-15	7 Day	795.9d
D2220	A/C Preliminary Plans	6.0d	03-Aug-15	10-Aug-15	Standard 5-Day Workwe	102.0d
D2230	Clear Preliminary Design Comments (VDOT, FHWA, MWAA,	16.0d	11-Aug-15	01-Sep-15	Standard 5-Day Workwe	102.0d
Traffic		101.0d	25-Jun-15	12-Nov-15		471.0d
D2240	Conduct Traffic (signing, lighting, etc.) Inventory	25.0d	25-Jun-15	30-Jul-15	Standard 5-Day Workwe	64.0d
D2250	Prepare Preliminary Traffic Signals, Signing, Pavement Mark	25.0d	31-Jul-15	03-Sep-15	Standard 5-Day Workwe	64.0d
D2260	SFC Preliminary Plans (Wagman)	5.0d	04-Sep-15	11-Sep-15	Standard 5-Day Workwe	64.0d
D2270	A/C Preliminary Plans (Wagman)	5.0d	14-Sep-15	18-Sep-15	Standard 5-Day Workwe	64.0d
D2280	SFC Preliminary Plans (VDOT, FHWA, MWAA, Fairfax)	4.0d	21-Sep-15	24-Sep-15	Standard 5-Day Workwe	64.0d
D2290	R/C Preliminary Plans (VDOT, FHWA, MWAA, Fairfax)	15.0d	25-Sep-15	15-Oct-15	Standard 5-Day Workwe	64.0d
D2281	Preliminary Plans (WMATA)	30.0d	21-Sep-15	20-Oct-15	7 Day	681.9d
D2300	A/C Preliminary Plans	5.0d	16-Oct-15	22-Oct-15	Standard 5-Day Workwe	64.0d
D2310	Clear Preliminary Design Comments (VDOT, FHWA, MWAA,	15.0d	23-Oct-15	12-Nov-15	Standard 5-Day Workwe	64.0d
FI/ROW Plans		109.0d	25-Jun-15	24-Nov-15		463.0d
Roadway, Drainage, Lanscaping and Noise		109.0d	25-Jun-15	24-Nov-15		463.0d
D2320	Prepare FI/RW Plans	59.0d	25-Jun-15	17-Sep-15	Standard 5-Day Workwe	91.0d
D2350	SFC FI/RW Plans (VDOT, FHWA, MWAA, Fairfax)	3.0d	18-Sep-15	22-Sep-15	Standard 5-Day Workwe	91.0d
D2340	A/C FI/RW Plans (Wagman)	5.0d	23-Sep-15	29-Sep-15	Standard 5-Day Workwe	91.0d
D2330	SFC FI/RW Plans (Wagman)	1.0d	30-Sep-15	30-Sep-15	Standard 5-Day Workwe	91.0d
D2351	FI/RW Plans (WMATA)	30.0d	18-Sep-15	17-Oct-15	7 Day	684.9d
D2360	R/C FI/RW Plans (VDOT, FHWA, MWAA, Fairfax)	15.0d	01-Oct-15	21-Oct-15	Standard 5-Day Workwe	91.0d
D2370	A/C FI/RW Plans	7.0d	22-Oct-15	30-Oct-15	Standard 5-Day Workwe	91.0d
D2380	R/A FI/RW Plans & RW 300/301 Approval (VDOT, FHWA, M	16.0d	02-Nov-15	23-Nov-15	Standard 5-Day Workwe	91.0d
D2390	Notice to Commence ROW Acquisition (VDOT, FHWA, MWA	1.0d	24-Nov-15	24-Nov-15	Standard 5-Day Workwe	91.0d
Traffic		99.0d	25-Jun-15	10-Nov-15		473.0d
D2400	Prepare Intermediate Traffic Signals, Signing, Pavement Mar	43.0d	25-Jun-15	25-Aug-15	Standard 5-Day Workwe	53.0d
D2410	SFC Intermediate Plans (Wagman)	7.0d	26-Aug-15	03-Sep-15	Standard 5-Day Workwe	53.0d
D2420	A/C Intermediate Plans (Wagman)	5.0d	04-Sep-15	11-Sep-15	Standard 5-Day Workwe	53.0d
D2430	SFC Intermediate Plans (VDOT, FHWA, MWAA, Fairfax)	3.0d	14-Sep-15	16-Sep-15	Standard 5-Day Workwe	53.0d
D2440	R/C Intermediate Plans (VDOT, FHWA, MWAA, Fairfax)	15.0d	17-Sep-15	07-Oct-15	Standard 5-Day Workwe	53.0d
D2431	Intermediate Plans (WMATA)	30.0d	14-Sep-15	13-Oct-15	7 Day	688.9d

ABBREVIATIONS

A/C	Address Comments	SFA	Submit for Approval
R/A	Review and Approve	SFC	Submit for Comment
R/C	Review and Comment	FRPS	Form, Rebar, Pour, Strip

Activity ID	Activity Name	Planned Duration	Start	Finish	Calendar	Total Float
A9180	A/C Intermediate Plans	7.0d	08-Oct-15	16-Oct-15	Standard 5-Day Workwe	53.0d
D2460	R/A Intermediate Plans (VDOT, FHWA, MWAA, Fairfax)	16.0d	19-Oct-15	09-Nov-15	Standard 5-Day Workwe	53.0d
D2470	AFC MOT Plans and Details	1.0d	10-Nov-15	10-Nov-15	Standard 5-Day Workwe	53.0d
Lighting		98.0d	25-Jun-15	09-Nov-15		474.0d
D2480	Prepare Lighting Calculations/Plan	43.0d	25-Jun-15	25-Aug-15	Standard 5-Day Workwe	68.0d
D2490	SFC Lighting Calculations/Plan (Wagman)	7.0d	26-Aug-15	03-Sep-15	Standard 5-Day Workwe	68.0d
D2500	A/C Lighting Calculations/Plan (Wagman)	5.0d	04-Sep-15	11-Sep-15	Standard 5-Day Workwe	68.0d
D2510	SFC Lighting Calculations/Plan (VDOT, FHWA, MWAA, Fair	3.0d	14-Sep-15	16-Sep-15	Standard 5-Day Workwe	68.0d
D2520	R/C Lighting Calculations/Plan (VDOT, FHWA, MWAA, Fairf	15.0d	17-Sep-15	07-Oct-15	Standard 5-Day Workwe	68.0d
D2511	Lighting Calculations/Plan (WMATA)	30.0d	14-Sep-15	13-Oct-15	7 Day	688.9d
D2530	A/C Lighting Calculations/Plan	7.0d	08-Oct-15	16-Oct-15	Standard 5-Day Workwe	68.0d
D2540	R/A Lighting Calculations/Plan (VDOT, FHWA, MWAA, Fairfa	16.0d	19-Oct-15	09-Nov-15	Standard 5-Day Workwe	68.0d
Final Design		183.0d	25-Jun-15	07-Mar-16		389.0d
Roadway, Drainage, Landscaping and Noise		183.0d	25-Jun-15	07-Mar-16		389.0d
D2550	Prepare Final Design Plans	43.0d	25-Jun-15	25-Aug-15	Standard 5-Day Workwe	102.0d
D2580	SFC Final Plans (VDOT, FHWA, MWAA, Fairfax)	5.0d	26-Aug-15	01-Sep-15	Standard 5-Day Workwe	102.0d
D2570	A/C Final Plans (Wagman)	5.0d	02-Sep-15	09-Sep-15	Standard 5-Day Workwe	102.0d
D2560	SFC Final Plans (Wagman)	4.0d	10-Sep-15	15-Sep-15	Standard 5-Day Workwe	102.0d
D2581	Final Plans (WMATA)	30.0d	26-Aug-15	24-Sep-15	7 Day	707.9d
D2590	R/C Final Plans (VDOT, FHWA, MWAA, Fairfax)	18.0d	08-Jan-16	02-Feb-16	Standard 5-Day Workwe	23.0d
D2600	A/C Final Plans	7.0d	03-Feb-16	11-Feb-16	Standard 5-Day Workwe	23.0d
D2610	R/A Final Plans (VDOT, FHWA, MWAA, Fairfax)	16.0d	12-Feb-16	04-Mar-16	Standard 5-Day Workwe	23.0d
D2620	Released for Construction Roadway & Drainage Plans	1.0d	07-Mar-16	07-Mar-16	Standard 5-Day Workwe	23.0d
Traffic		102.0d	15-Sep-15	03-Feb-16		412.0d
D2630	Prepare Final Traffic Signals, Signing, & Pavement Marking	43.0d	15-Sep-15	12-Nov-15	Standard 5-Day Workwe	64.0d
D2640	SFC Final TE Plans (Wagman)	4.0d	13-Nov-15	18-Nov-15	Standard 5-Day Workwe	64.0d
D2650	A/C Final TE Plans (Wagman)	5.0d	19-Nov-15	25-Nov-15	Standard 5-Day Workwe	64.0d
D2660	SFA Final TE Plans (VDOT, FHWA, MWAA, Fairfax)	5.0d	27-Nov-15	03-Dec-15	Standard 5-Day Workwe	64.0d
D2661	Final TE Plans (WMATA)	30.0d	27-Nov-15	26-Dec-15	7 Day	614.9d
D2670	R/C Final TE Plans (VDOT, FHWA, MWAA, Fairfax)	18.0d	04-Dec-15	30-Dec-15	Standard 5-Day Workwe	64.0d
D2680	A/C Final TE Plans	7.0d	31-Dec-15	11-Jan-16	Standard 5-Day Workwe	64.0d
D2690	R/A Final TE Plans (VDOT, FHWA, MWAA, Fairfax)	16.0d	12-Jan-16	02-Feb-16	Standard 5-Day Workwe	64.0d
D2700	Released for Construction TE Plans	1.0d	03-Feb-16	03-Feb-16	Standard 5-Day Workwe	64.0d
Lighting		101.0d	10-Sep-15	28-Jan-16		416.0d
D2710	Prepare Lighting Calculations/Plan	43.0d	10-Sep-15	09-Nov-15	Standard 5-Day Workwe	68.0d
D2720	SFA Lighting Calculations/Plan (Wagman)	4.0d	10-Nov-15	13-Nov-15	Standard 5-Day Workwe	68.0d
D2730	A/C Lighting Calculations/Plan (Wagman)	5.0d	16-Nov-15	20-Nov-15	Standard 5-Day Workwe	68.0d
D2740	SFA Lighting Calculations/Plan (VDOT, FHWA, MWAA, Fairf	5.0d	23-Nov-15	30-Nov-15	Standard 5-Day Workwe	68.0d
D2741	Lighting Calculations/Plan	30.0d	23-Nov-15	22-Dec-15	7 Day	618.9d
D2750	R/C Lighting Calculations/Plan (VDOT, FHWA, MWAA, Fairf	18.0d	01-Dec-15	24-Dec-15	Standard 5-Day Workwe	68.0d
D2760	A/C Lighting Calculations/Plan	7.0d	28-Dec-15	06-Jan-16	Standard 5-Day Workwe	68.0d
D2770	R/A Lighting Calculations/Plan (VDOT, FHWA, MWAA, Fairfa	16.0d	07-Jan-16	28-Jan-16	Standard 5-Day Workwe	68.0d
VPDES/SWPPP Permitting		76.0d	25-Jun-15	08-Oct-15		496.0d
D2780	Prepare & Submit SWPPP Certification Form	43.0d	25-Jun-15	25-Aug-15	Standard 5-Day Workwe	92.0d
D2790	R/A SWPPP Certification Form	4.0d	26-Aug-15	31-Aug-15	Standard 5-Day Workwe	92.0d
D2800	Prepare & Submit VPDES Permit Registration	5.0d	01-Sep-15	08-Sep-15	Standard 5-Day Workwe	92.0d
D2810	SFA VPDES (VDOT, FHWA, MWAA, Fairfax)	5.0d	09-Sep-15	15-Sep-15	Standard 5-Day Workwe	92.0d
D2820	R/A VPDES (VDOT, FHWA, MWAA, Fairfax)	1.0d	16-Sep-15	16-Sep-15	Standard 5-Day Workwe	92.0d
D2811	VPDES (WMATA)	30.0d	09-Sep-15	08-Oct-15	7 Day	693.9d
Individual Wetlands Permits		130.0d	25-Jun-15	23-Dec-15		94.0d
D2830	Perform Wetlands Delineations/Stream Assessments	10.0d	25-Jun-15	09-Jul-15	Standard 5-Day Workwe	92.0d
D2840	Prepare Wetlands Delineation/Stream Assessment Report	21.0d	10-Jul-15	07-Aug-15	Standard 5-Day Workwe	92.0d
D2850	Jurisdictional Determination	1.0d	10-Aug-15	10-Aug-15	Standard 5-Day Workwe	92.0d
D2860	Develop Impact Plates	9.0d	11-Aug-15	21-Aug-15	Standard 5-Day Workwe	92.0d
D2870	Perform and Document Avoidance/Minimization Studies	3.0d	24-Aug-15	26-Aug-15	Standard 5-Day Workwe	92.0d
D2880	Complete/Finalize Wetlands Permit Application	10.0d	27-Aug-15	10-Sep-15	Standard 5-Day Workwe	92.0d
D2890	Apply for Water Quality Permits	2.0d	11-Sep-15	14-Sep-15	Standard 5-Day Workwe	92.0d
D2900	R/C Wetlands Permit Application (Agencies)	31.0d	15-Sep-15	27-Oct-15	Standard 5-Day Workwe	92.0d
D2910	A/C Wetlands Permit Application	4.0d	28-Oct-15	02-Nov-15	Standard 5-Day Workwe	92.0d
D2920	R/A Wetlands Permit Application (Agencies)	35.0d	03-Nov-15	22-Dec-15	Standard 5-Day Workwe	92.0d
D2930	Agencies Accept Wetlands Permit Application	1.0d	23-Dec-15	23-Dec-15	Standard 5-Day Workwe	92.0d
Right of Way Acquisition Services		218.0d	25-Jun-15	25-Apr-16		354.0d
D2940	Prepare ROW Acquisition & Relocation Plan	4.0d	25-Jun-15	30-Jun-15	Standard 5-Day Workwe	98.0d
D2950	SFA ROW Acquisition and Relocation Plan	3.0d	01-Jul-15	06-Jul-15	Standard 5-Day Workwe	98.0d
D2960	R/A ROW Acquisition and Relocation Plan	16.0d	07-Jul-15	28-Jul-15	Standard 5-Day Workwe	07-Jul-15
D2970	Property/ROW Research	9.0d	29-Jul-15	10-Aug-15	Standard 5-Day Workwe	98.0d
D2980	Secure Last Deeds of Record	12.0d	11-Aug-15	26-Aug-15	Standard 5-Day Workwe	98.0d
D2990	Perform Title Search/Complete Title Report	20.0d	27-Aug-15	24-Sep-15	Standard 5-Day Workwe	496.0d
D3010	Develop Appraisals	20.0d	27-Aug-15	24-Sep-15	Standard 5-Day Workwe	98.0d
D3000	Mail Probable Take Notification to Property Owners	1.0d	25-Sep-15	25-Sep-15	Standard 5-Day Workwe	496.0d
D3020	Independent Appraisal Reviews	12.0d	25-Sep-15	12-Oct-15	Standard 5-Day Workwe	98.0d

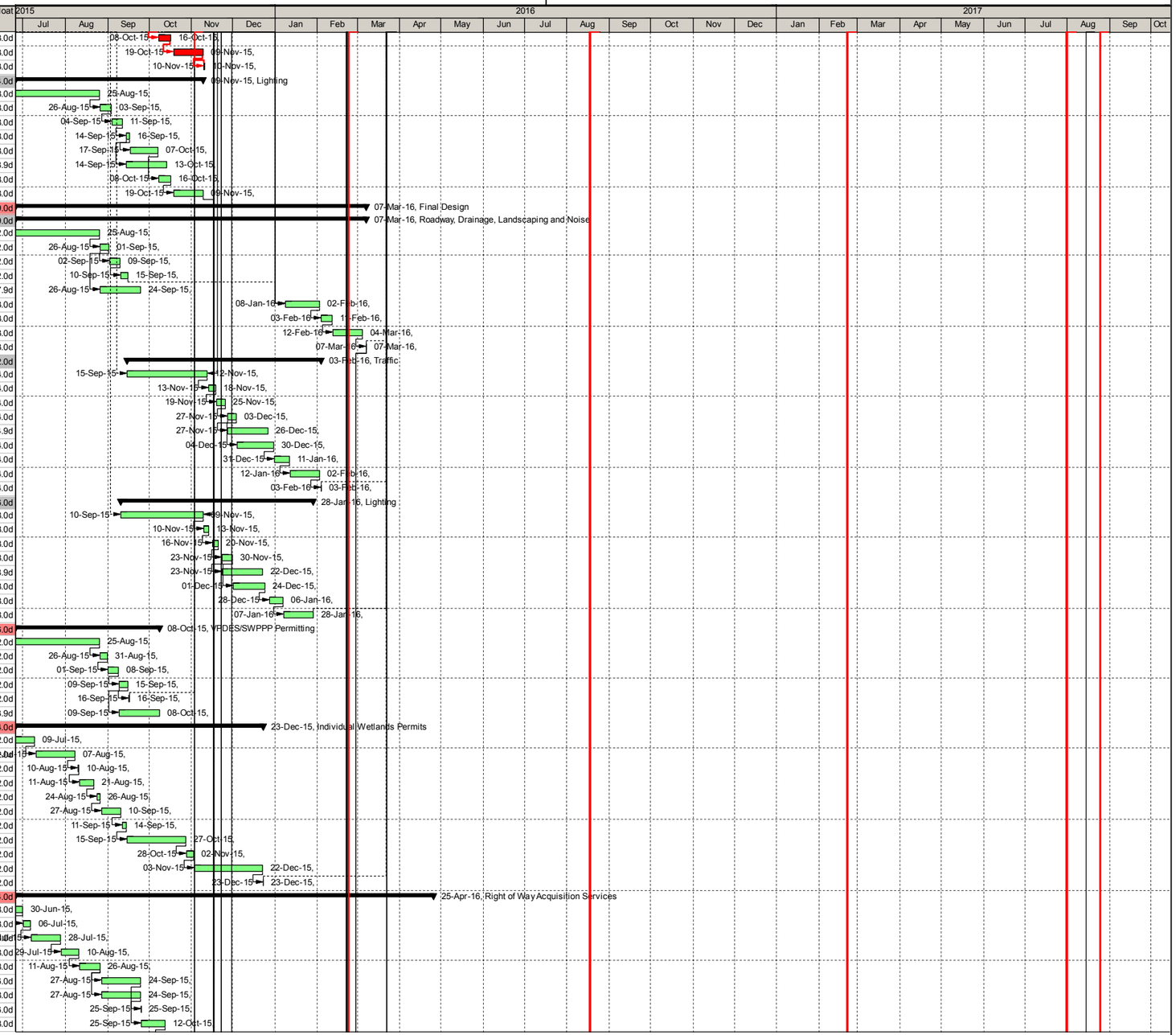

ABBREVIATIONS

A/C	Address Comments	SFA	Submit for Approval
R/A	Review and Approve	SFC	Submit for Comment
R/C	Review and Comment	FRPS	Form, Rebar, Pour, Strip

Activity ID	Activity Name	Planned Duration	Start	Finish	Calendar	Total Float
D3030	SFA Appraisals - (RUMS)	8.0d	13-Oct-15	22-Oct-15	Standard 5-Day Workwe	98.0d
D3040	R/A Apparaisals (VDOT)	16.0d	23-Oct-15	13-Nov-15	Standard 5-Day Workwe	98.0d
D3050	Present Offer Packages	4.0d	25-Nov-15	01-Dec-15	Standard 5-Day Workwe	91.0d
D3060	Initial Offer Negoatiation Period	28.0d	02-Dec-15	12-Jan-16	Standard 5-Day Workwe	91.0d
D3070	Submit Justification Letters	18.0d	16-Dec-15	12-Jan-16	Standard 5-Day Workwe	91.0d
D3080	R/A Justification Letters	15.0d	13-Jan-16	02-Feb-16	Standard 5-Day Workwe	91.0d
D3090	SFA Acceptance/Refusal Package	17.0d	13-Jan-16	04-Feb-16	Standard 5-Day Workwe	91.0d
D3100	Record Certificates of Take	9.0d	05-Feb-16	17-Feb-16	Standard 5-Day Workwe	91.0d
D3110	Obtain Releases of Deeds of Trust and encomprences	31.0d	05-Feb-16	18-Mar-16	Standard 5-Day Workwe	91.0d
D3120	Close with Land Owners	25.0d	21-Mar-16	22-Apr-16	Standard 5-Day Workwe	91.0d
D3130	Obtain Attorney Certification of Title	26.0d	21-Mar-16	25-Apr-16	Standard 5-Day Workwe	91.0d
Utility Coordination and Relocations		287.0d	25-Jun-15	29-Jul-16		285.0d
D3140	Initiate Coordination with All Utility Companies	48.0d	25-Jun-15	01-Sep-15	Standard 5-Day Workwe	18.0d
D3150	Prepare Utility Status Report (RUMS Update)	4.0d	02-Sep-15	08-Sep-15	Standard 5-Day Workwe	18.0d
D3160	Prepare UT-9's for All Utilities	5.0d	09-Sep-15	15-Sep-15	Standard 5-Day Workwe	18.0d
D3170	Schedule and Hold Meeting w/ VDOT Regional Utilities Offic	3.0d	16-Sep-15	18-Sep-15	Standard 5-Day Workwe	18.0d
D3180	Schedule and Hold Utility Field Inspection Review Meeting	10.0d	21-Sep-15	02-Oct-15	Standard 5-Day Workwe	18.0d
D3190	Receive Private Utility Relocation Plans	43.0d	05-Oct-15	03-Dec-15	Standard 5-Day Workwe	18.0d
D3200	SFA P&E and Relocation Plans (To Team)	4.0d	04-Dec-15	09-Dec-15	Standard 5-Day Workwe	18.0d
D3201	P&E and Relocation Plans (WMATA)	30.0d	04-Dec-15	02-Jan-16	7 Day	607.9d
D3210	R/A P&E and Relocation Plans (VDOT, FHWA, MWAA, Fairfa	23.0d	10-Dec-15	13-Jan-16	Standard 5-Day Workwe	18.0d
D3220	Private Utility Relocations	100.0d	10-Mar-16	29-Jul-16	Standard 5-Day Workwe	18.0d
Construction Engineering Services		571.0d	25-Jun-15	31-Aug-17		1.0d
D3240	Utility Coordination During Relocation	100.0d	01-Aug-16	20-Dec-16	Standard 5-Day Workwe	181.0d
D3230	Respond to Requests for Information (RFI's) and Shop Draw	560.0d	25-Jun-15	31-Aug-17	Standard 5-Day Workwe	1.0d
Construction Submittals		105.0d	24-Nov-15	18-Apr-16		170.0d
A7540	SOE Plan	20.0d	24-Nov-15	22-Dec-15	Standard 5-Day Workwe	50.0d
A7610	Demolition Plan	20.0d	24-Nov-15	22-Dec-15	Standard 5-Day Workwe	27.0d
A7590	SIP Shop Drawings	30.0d	30-Nov-15	12-Jan-16	Standard 5-Day Workwe	58.0d
A7620	Review/Approve SOE	15.0d	23-Dec-15	14-Jan-16	Standard 5-Day Workwe	50.0d
A7690	Review/Approve Demolition Plan	15.0d	23-Dec-15	14-Jan-16	Standard 5-Day Workwe	27.0d
A7570	Girder Shop Drawings	45.0d	30-Nov-15	02-Feb-16	Standard 5-Day Workwe	11.0d
A7670	Review/Approve SIP Shop Drawings	15.0d	13-Jan-16	02-Feb-16	Standard 5-Day Workwe	58.0d
A7650	Review/Approve Girder Shop Drawings	15.0d	03-Feb-16	23-Feb-16	Standard 5-Day Workwe	11.0d
A7560	Erection Plan	20.0d	01-Mar-16	28-Mar-16	Standard 5-Day Workwe	32.0d
A7580	Overhang Submittal	20.0d	01-Mar-16	28-Mar-16	Standard 5-Day Workwe	37.0d
A7600	Pedestrian Fence Shop Drawings	20.0d	01-Mar-16	28-Mar-16	Standard 5-Day Workwe	166.0d
A7640	Review/Approve Erection Plan	15.0d	29-Mar-16	18-Apr-16	Standard 5-Day Workwe	32.0d
A7660	Review/Approve Overhang Submittal	15.0d	29-Mar-16	18-Apr-16	Standard 5-Day Workwe	37.0d
A7680	Review Approve Pedestrian Fence Shop Drawings	15.0d	29-Mar-16	18-Apr-16	Standard 5-Day Workwe	166.0d
Acquisition		136.0d	24-Nov-15	31-May-16		169.0d
A8670	Fabricate/Delivery Substructure Rebar	30.0d	24-Nov-15	07-Jan-16	Standard 5-Day Workwe	38.0d
A8690	Fabricate/Delivery SIP Decking	45.0d	03-Feb-16	05-Apr-16	Standard 5-Day Workwe	58.0d
A8680	Fabricate/Delivery Superstructure Rebar	30.0d	01-Mar-16	11-Apr-16	Standard 5-Day Workwe	59.0d
A8660	Fabricate/Delivery Girders	60.0d	24-Feb-16	17-May-16	Standard 5-Day Workwe	11.0d
A8700	Fabricate/Delivery Fence	30.0d	19-Apr-16	31-May-16	Standard 5-Day Workwe	166.0d
Construction		473.0d	10-Nov-15	01-Sep-17		0.0d
Phase I		206.0d	10-Nov-15	24-Aug-16		0.0d
A1270	Project Signage	10.0d	10-Nov-15	24-Nov-15	Workweek Weather	49.1d
Phase 1A		43.0d	24-Nov-15	22-Jan-16		26.0d
A6120	Install Ped. Access on WB Bridge	7.0d	24-Nov-15	07-Dec-15	Workweek Weather	49.1d
A6130	Remove Exist. Sidewalk	3.0d	14-Jan-16	20-Jan-16	Workweek Weather	25.1d
A6140	Stripe/Shift Traffic to Phase 1B	2.0d	20-Jan-16	22-Jan-16	Workweek Weather	25.1d
Phase 1B		206.0d	10-Nov-15	24-Aug-16		0.0d
A9390	Pier 1 MOT	2.0d	10-Nov-15	12-Nov-15	Workweek Weather	60.1d
A9430	Pier 5 MOT	2.0d	12-Nov-15	16-Nov-15	Workweek Weather	63.1d
A9410	Pier 3 MOT	2.0d	16-Nov-15	18-Nov-15	Workweek Weather	95.1d
A9420	Pier 4 MOT	2.0d	13-Apr-16	15-Apr-16	Workweek Weather	1.1d
A9400	Pier 2 MOT	2.0d	15-Apr-16	18-Apr-16	Workweek Weather	0.0d
Bridge		198.0d	12-Nov-15	16-Aug-16		3.0d
A6150	Install Barrier	8.0d	22-Jan-16	03-Feb-16	Workweek Weather	25.1d
A6160	Rem. Overhang on WB Bridge	5.0d	03-Feb-16	10-Feb-16	Workweek Weather	25.1d
A6170	Rem. Overhang on EB Bridge	5.0d	10-Feb-16	18-Feb-16	Workweek Weather	25.1d
Abuments		68.0d	22-Jan-16	27-Apr-16		26.0d
A9540	SOE Abut. A Outside	5.0d	22-Jan-16	29-Jan-16	Workweek Weather	59.1d
A9590	SOE Abut. B Outside	5.0d	29-Jan-16	05-Feb-16	Workweek Weather	59.1d
A6180	SOE Abut. A	7.0d	18-Feb-16	29-Feb-16	Workweek Weather	25.1d
A9550	Drive Pile Abut. A Outside	3.0d	29-Feb-16	03-Mar-16	Workweek Weather	44.1d
A9600	Drive Pile Abut. B Outside	3.0d	29-Feb-16	03-Mar-16	Workweek Weather	44.1d
A6190	Rem. Portion of Abut. A	4.0d	29-Feb-16	04-Mar-16	Workweek Weather	32.1d
A6250	SOE Abut. B	7.0d	29-Feb-16	09-Mar-16	Workweek Weather	25.1d
A6200	Drive Pile Abut. A	4.0d	04-Mar-16	10-Mar-16	Workweek Weather	32.1d

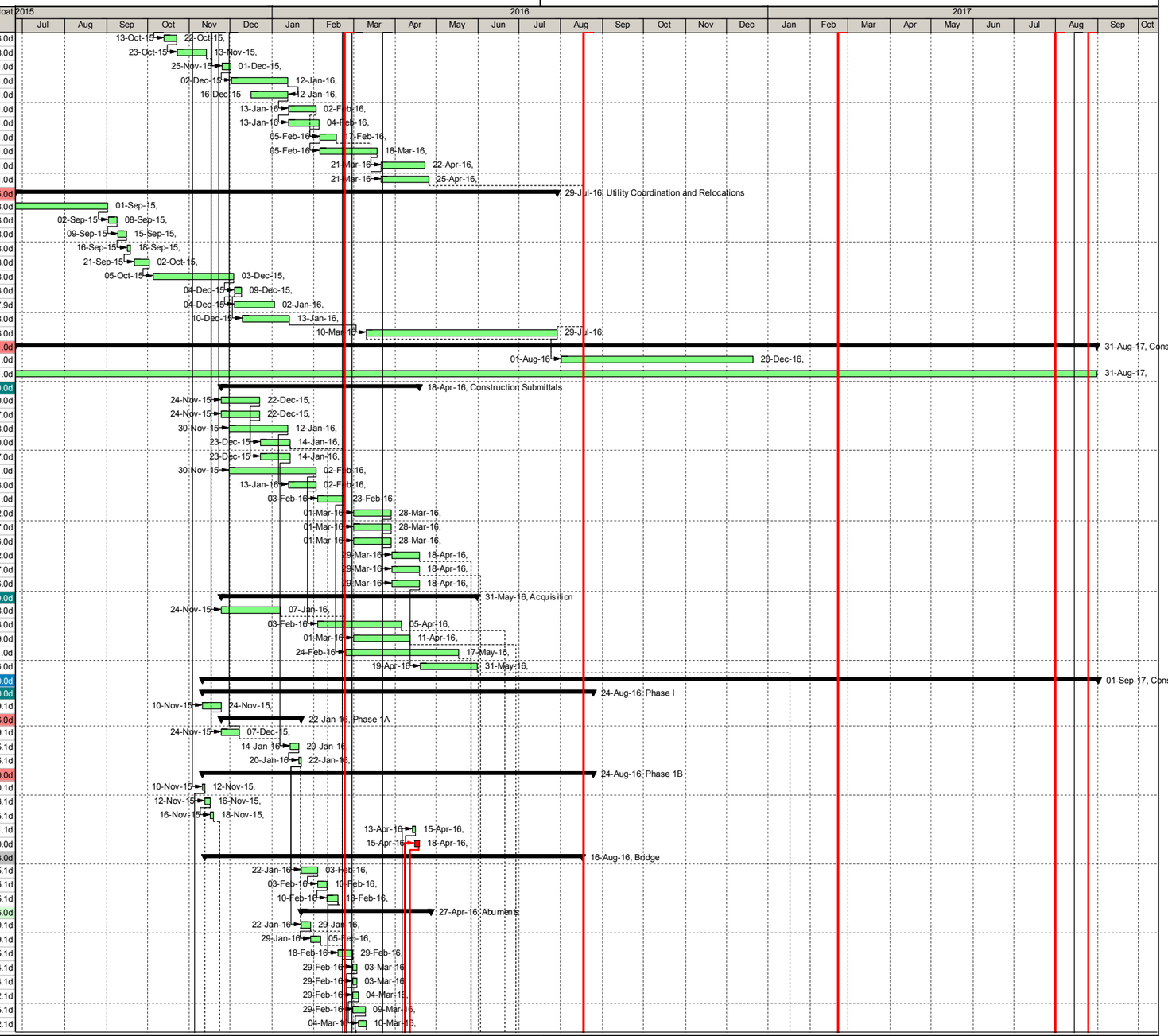

ABBREVIATIONS

A/C	Address Comments	SFA	Submit for Approval
R/A	Review and Approve	SFC	Submit for Comment
R/C	Review and Comment	FRPS	Form, Rebar, Pour, Strip

Activity ID	Activity Name	Planned Duration	Start	Finish	Calendar	Total Float
A6260	Rem. Portion of Abut. B	4.0d	09-Mar-16	15-Mar-16	Workweek Weather	25.1d
A9560	Retaining Wall Structure Abut. A Outside	10.0d	03-Mar-16	17-Mar-16	Workweek Weather	44.1d
A9610	Retaining Wall Structure Abut. B Outside	10.0d	03-Mar-16	17-Mar-16	Workweek Weather	44.1d
A6270	Drive Pile Abut. B	4.0d	15-Mar-16	21-Mar-16	Workweek Weather	25.1d
A9570	FRPS Abut. A Footing Outside	5.0d	17-Mar-16	24-Mar-16	Workweek Weather	44.1d
A9620	FRPS Abut. B Footing Outside	5.0d	17-Mar-16	24-Mar-16	Workweek Weather	44.1d
A6210	Retaining Wall Structure Abut. A	12.0d	10-Mar-16	28-Mar-16	Workweek Weather	32.1d
A9580	FRPS Abut. A Seat Outside	5.0d	24-Mar-16	31-Mar-16	Workweek Weather	44.1d
A9630	FRPS Abut. B Seat Outside	5.0d	24-Mar-16	31-Mar-16	Workweek Weather	44.1d
A6220	FRPS Abut. A Footing	5.0d	28-Mar-16	04-Apr-16	Workweek Weather	32.1d
A6280	Retaining Wall Structure Abut. B	12.0d	21-Mar-16	06-Apr-16	Workweek Weather	25.1d
A6230	FRPS Abut. A Seat	5.0d	04-Apr-16	11-Apr-16	Workweek Weather	32.1d
A6290	FRPS Abut. B Footing	5.0d	06-Apr-16	13-Apr-16	Workweek Weather	25.1d
A6240	Coping Abut. A	5.0d	11-Apr-16	18-Apr-16	Workweek Weather	32.1d
A6300	FRPS Abut. B Seat	5.0d	13-Apr-16	20-Apr-16	Workweek Weather	25.1d
A6310	Coping Abut. B	5.0d	20-Apr-16	27-Apr-16	Workweek Weather	25.1d
Piers		145.0d	12-Nov-15	02-Jun-16		0.0d
A6320	SOE Pier 1	5.0d	12-Nov-15	19-Nov-15	Workweek Weather	60.1d
A6440	SOE Pier 5	5.0d	19-Nov-15	30-Nov-15	Workweek Weather	60.1d
A6380	SOE Pier 3	5.0d	30-Nov-15	07-Dec-15	Workweek Weather	89.1d
A6450	Pier 5 Foundation A	7.0d	29-Feb-16	09-Mar-16	Workweek Weather	1.1d
A6330	Pier 1 Foundation A	7.0d	02-Mar-16	10-Mar-16	Workweek Weather	0.0d
A6390	Pier 3 Foundation A	7.0d	02-Mar-16	10-Mar-16	Workweek Weather	34.0d
A9230	Pier 5 Footing A	5.0d	09-Mar-16	16-Mar-16	Workweek Weather	45.1d
A9190	Pier 1 Footing A	5.0d	11-Mar-16	17-Mar-16	Workweek Weather	12.0d
A9210	Pier 3 Footing A	5.0d	11-Mar-16	17-Mar-16	Workweek Weather	44.0d
A9280	Pier 5 Foundation B	10.0d	09-Mar-16	23-Mar-16	Workweek Weather	1.1d
A9240	Pier 1 Foundation B	10.0d	11-Mar-16	24-Mar-16	Workweek Weather	0.0d
A9260	Pier 3 Foundation B	10.0d	11-Mar-16	24-Mar-16	Workweek Weather	34.0d
A6460	FRPS Pier 5A	10.0d	16-Mar-16	30-Mar-16	Workweek Weather	45.1d
A9330	Pier 5 Footing B	5.0d	23-Mar-16	30-Mar-16	Workweek Weather	1.1d
A6340	FRPS Pier 1A	10.0d	18-Mar-16	31-Mar-16	Workweek Weather	12.0d
A6400	FRPS Pier 3A	10.0d	18-Mar-16	31-Mar-16	Workweek Weather	44.0d
A9290	Pier 1 Footing B	5.0d	25-Mar-16	31-Mar-16	Workweek Weather	0.0d
A9310	Pier 3 Footing B	5.0d	25-Mar-16	31-Mar-16	Workweek Weather	34.0d
A9360	FRPS Pier 5B	10.0d	30-Mar-16	13-Apr-16	Workweek Weather	1.1d
A9340	FRPS Pier 1B	10.0d	01-Apr-16	14-Apr-16	Workweek Weather	0.0d
A9350	FRPS Pier 3B	10.0d	01-Apr-16	14-Apr-16	Workweek Weather	34.0d
A6410	SOE Pier 4	7.0d	15-Apr-16	26-Apr-16	Workweek Weather	1.1d
A6350	SOE Pier 2	7.0d	19-Apr-16	27-Apr-16	Workweek Weather	0.0d
A6420	Pier 4 Foundation A	7.0d	26-Apr-16	05-May-16	Workweek Weather	4.1d
A6360	Pier 2 Foundation A	7.0d	28-Apr-16	06-May-16	Workweek Weather	3.0d
A9270	Pier 4 Foundation B	10.0d	26-Apr-16	10-May-16	Workweek Weather	1.1d
A9250	Pier 2 Foundation B	10.0d	28-Apr-16	11-May-16	Workweek Weather	0.0d
A9220	Pier 4 Footing A	5.0d	05-May-16	12-May-16	Workweek Weather	4.1d
A9200	Pier 2 Footing A	5.0d	09-May-16	13-May-16	Workweek Weather	3.0d
A9320	Pier 4 Footing B	5.0d	10-May-16	17-May-16	Workweek Weather	1.1d
A9300	Pier 2 Footing B	5.0d	12-May-16	18-May-16	Workweek Weather	0.0d
A6430	FRPS Pier 4A	10.0d	12-May-16	26-May-16	Workweek Weather	4.1d
A6370	FRPS Pier 2A	10.0d	16-May-16	27-May-16	Workweek Weather	3.0d
A9380	FRPS Pier 4B	10.0d	17-May-16	01-Jun-16	Workweek Weather	1.1d
A9370	FRPS Pier 2B	10.0d	19-May-16	02-Jun-16	Workweek Weather	0.0d
Superstructure		53.0d	03-Jun-16	16-Aug-16		3.0d
A6470	Erect Girders	10.0d	03-Jun-16	16-Jun-16	Workweek Weather	0.0d
A6480	Install Overhangs	12.0d	10-Jun-16	27-Jun-16	Workweek Weather	0.0d
A9650	FRPS Integral Backwall A	8.0d	17-Jun-16	28-Jun-16	Workweek Weather	2.0d
A9770	Install Utility Hangers	10.0d	17-Jun-16	30-Jun-16	Workweek Weather	2.0d
A6490	SIP Deck Forms	5.0d	28-Jun-16	05-Jul-16	Workweek Weather	0.0d
A9660	FRPS Integral Backwall B	8.0d	29-Jun-16	11-Jul-16	Workweek Weather	2.0d
A6500	Deck Rebar	6.0d	06-Jul-16	13-Jul-16	Workweek Weather	0.0d
A6510	Pour Deck	5.0d	14-Jul-16	20-Jul-16	Workweek Weather	0.0d
A6520	Deck Curing	5.0d	21-Jul-16	27-Jul-16	Workweek Weather	0.0d
A9750	FRPS Approach Slab A	5.0d	21-Jul-16	27-Jul-16	Workweek Weather	2.0d
A9760	FRPS Approach Slab B	5.0d	28-Jul-16	03-Aug-16	Workweek Weather	2.0d
A9150	Strip Overhangs	7.0d	28-Jul-16	05-Aug-16	Workweek Weather	0.0d
A6530	Deck Grooving	2.0d	08-Aug-16	09-Aug-16	Workweek Weather	0.0d
A6540	Concrete Barrier	5.0d	10-Aug-16	16-Aug-16	Workweek Weather	3.0d
Roadway Rt. 7		106.0d	30-Mar-16	24-Aug-16		0.0d
A9120	Bridge Tie-Ins	8.0d	10-Aug-16	19-Aug-16	Workweek Weather	0.0d
A9000	Stripe/Switch Traffic to Phase 2	3.0d	22-Aug-16	24-Aug-16	Workweek Weather	0.0d
Sta. 522+00 to 530+99 (West of Bridge)		76.0d	30-Mar-16	13-Jul-16		27.0d

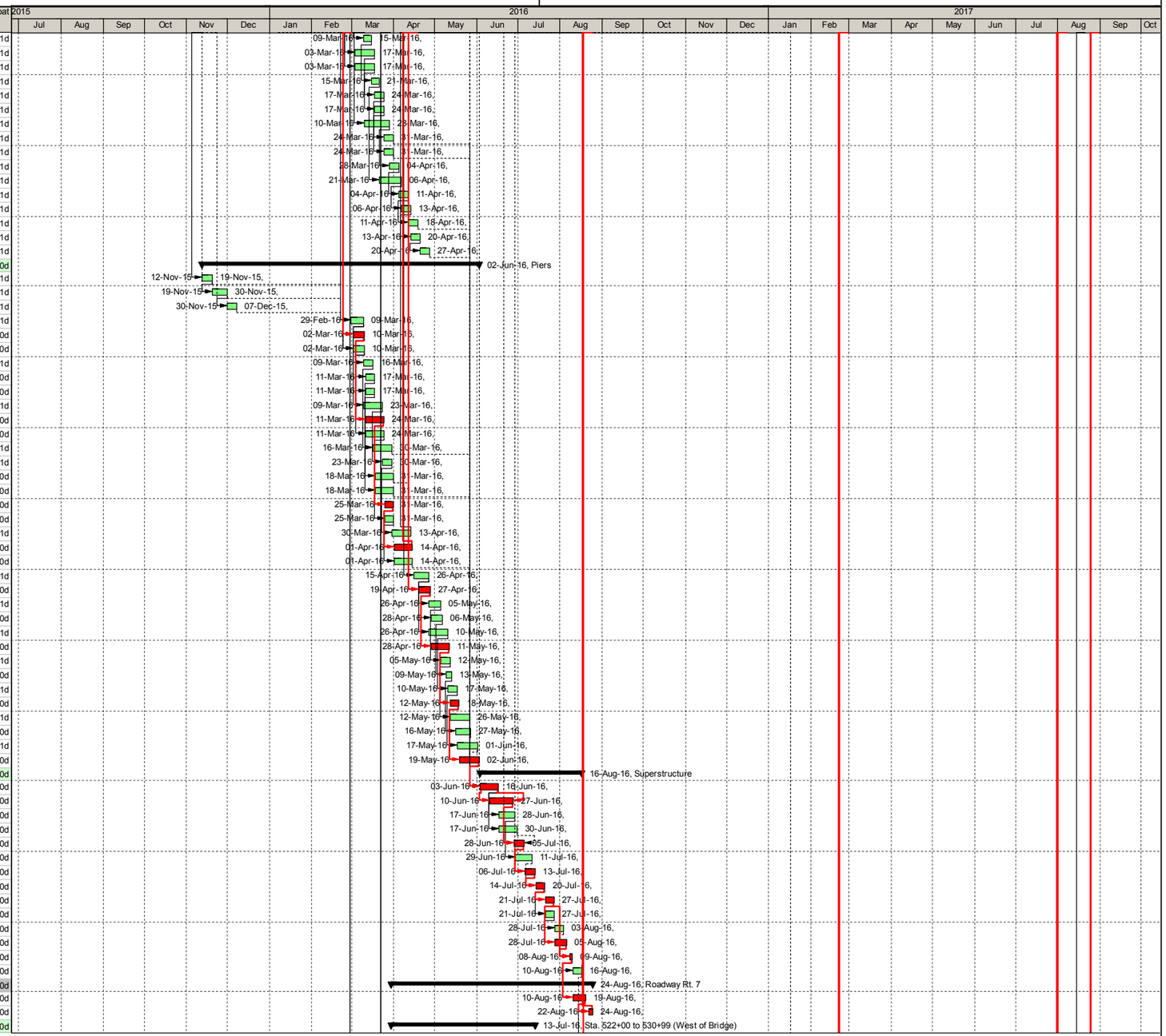

ABBREVIATIONS

A/C	Address Comments	SFA	Submit for Approval
R/A	Review and Approve	SFC	Submit for Comment
R/C	Review and Comment	FRPS	Form, Rebar, Pour, Strip

Activity ID	Activity Name	Planned Duration	Start	Finish	Calendar	Total Float
A8980	Relocate CCTV Camera	3.0d	30-Mar-16	01-Apr-16	Workweek Weather	27.0d
A8740	Clear and Grub	5.0d	04-Apr-16	08-Apr-16	Workweek Weather	27.0d
A8760	Saw Cut	3.0d	11-Apr-16	13-Apr-16	Workweek Weather	27.0d
A8750	E/S	5.0d	11-Apr-16	15-Apr-16	Workweek Weather	27.0d
A8770	Strip Topsoil	3.0d	14-Apr-16	18-Apr-16	Workweek Weather	27.0d
A8790	Rough Grade	15.0d	03-May-16	23-May-16	Grading	27.0d
A8810	Storm Sewer	15.0d	24-May-16	13-Jun-16	Grading	27.0d
A8820	Underdrain	5.0d	14-Jun-16	20-Jun-16	Grading	29.0d
A8800	Fine Grade	7.0d	14-Jun-16	22-Jun-16	Grading	27.0d
A8830	Subbase	5.0d	23-Jun-16	29-Jun-16	Grading	27.0d
A8850	BM	5.0d	30-Jun-16	06-Jul-16	Paving	27.0d
A8860	IM	5.0d	07-Jul-16	13-Jul-16	Paving	27.0d
Sta. 535+36 to 547+21 (East of Bridge)		78.0d	30-Mar-16	15-Jul-16		25.0d
A8870	Clear and Grub	5.0d	30-Mar-16	05-Apr-16	Workweek Weather	25.0d
A8890	Saw Cut	3.0d	06-Apr-16	08-Apr-16	Workweek Weather	25.0d
A8880	E/S	5.0d	06-Apr-16	12-Apr-16	Workweek Weather	25.0d
A8900	Strip Topsoil	3.0d	11-Apr-16	13-Apr-16	Workweek Weather	25.0d
A8910	Rough Grade	15.0d	28-Apr-16	18-May-16	Grading	25.0d
A8920	Storm Sewer	15.0d	19-May-16	08-Jun-16	Grading	25.0d
A8930	Underdrain	5.0d	09-Jun-16	15-Jun-16	Grading	27.0d
A8940	Fine Grade	7.0d	09-Jun-16	17-Jun-16	Grading	25.0d
A8950	Subbase	5.0d	20-Jun-16	24-Jun-16	Grading	25.0d
A8960	BM	5.0d	27-Jun-16	01-Jul-16	Paving	25.0d
A8970	IM	5.0d	04-Jul-16	08-Jul-16	Paving	25.0d
A8990	Temporary Pavement	5.0d	11-Jul-16	15-Jul-16	Paving	25.0d
Phase 2		256.0d	07-Mar-16	28-Feb-17		133.0d
A9440	Pier 1 MOT	2.0d	09-Sep-16	12-Sep-16	Workweek Weather	7.0d
A9480	Pier 5 MOT	2.0d	13-Sep-16	14-Sep-16	Workweek Weather	17.0d
A9460	Pier 3 MOT	2.0d	27-Sep-16	28-Sep-16	Workweek Weather	7.0d
A9470	Pier 4 MOT	2.0d	29-Sep-16	30-Sep-16	Workweek Weather	17.0d
A9450	Pier 2 MOT	2.0d	14-Oct-16	17-Oct-16	Workweek Weather	7.0d
Bridges		122.0d	25-Aug-16	10-Feb-17		0.0d
A1440	Remove Exist. Superstr.	15.0d	25-Aug-16	15-Sep-16	Workweek Weather	0.0d
Abutments		39.0d	16-Sep-16	09-Nov-16		0.0d
A6550	SOE Abut. A	5.0d	16-Sep-16	22-Sep-16	Workweek Weather	0.0d
A6560	SOE Abut. B	5.0d	16-Sep-16	22-Sep-16	Workweek Weather	0.0d
A6570	Rem. Portion of Abut. A	4.0d	23-Sep-16	28-Sep-16	Workweek Weather	0.0d
A6580	Rem. Portion of Abut. B	4.0d	23-Sep-16	28-Sep-16	Workweek Weather	0.0d
A6590	Drive Pile Abut. A	4.0d	29-Sep-16	04-Oct-16	Workweek Weather	0.0d
A6600	Drive Pile Abut. B	4.0d	29-Sep-16	04-Oct-16	Workweek Weather	0.0d
A6610	Retaining Wall Structure Abut. A	10.0d	05-Oct-16	19-Oct-16	Workweek Weather	0.0d
A6620	Retaining Wall Structure Abut. B	10.0d	05-Oct-16	19-Oct-16	Workweek Weather	0.0d
A6630	FRPS Abut. A Footing	5.0d	20-Oct-16	26-Oct-16	Workweek Weather	0.0d
A6640	FRPS Abut. B Footing	5.0d	20-Oct-16	26-Oct-16	Workweek Weather	0.0d
A6650	FRPS Abut. A Seat	6.0d	27-Oct-16	03-Nov-16	Workweek Weather	0.0d
A6660	FRPS Abut. B Seat	6.0d	27-Oct-16	03-Nov-16	Workweek Weather	0.0d
A6670	Coping Abut. A	4.0d	04-Nov-16	09-Nov-16	Workweek Weather	0.0d
A6680	Coping Abut. B	4.0d	04-Nov-16	09-Nov-16	Workweek Weather	0.0d
Piers		35.0d	13-Sep-16	31-Oct-16		7.0d
A6790	Rehab Pier 1	10.0d	13-Sep-16	26-Sep-16	Workweek Weather	7.0d
A6830	Rehab Pier 5	10.0d	15-Sep-16	28-Sep-16	Workweek Weather	17.0d
A6810	Rehab Pier 3	10.0d	29-Sep-16	13-Oct-16	Workweek Weather	7.0d
A6820	Rehab Pier 4	10.0d	03-Oct-16	17-Oct-16	Workweek Weather	17.0d
A6800	Rehab Pier 2	10.0d	18-Oct-16	31-Oct-16	Workweek Weather	7.0d
Superstructure		67.0d	10-Nov-16	10-Feb-17		0.0d
A6840	Erect Girders	10.0d	10-Nov-16	23-Nov-16	Workweek Weather	0.0d
A6850	Install Overhangs	10.0d	17-Nov-16	02-Dec-16	Workweek Weather	0.0d
A9670	FRPS Integral Backwall A	8.0d	28-Nov-16	07-Dec-16	Workweek Weather	0.0d
A6860	SIP Deck Forms	5.0d	05-Dec-16	09-Dec-16	Workweek Weather	0.0d
A6870	Deck Rebar	6.0d	12-Dec-16	19-Dec-16	Workweek Weather	0.0d
A9680	FRPS Integral Backwall B	8.0d	08-Dec-16	19-Dec-16	Workweek Weather	0.0d
A6880	Pour Deck	5.0d	20-Dec-16	27-Dec-16	Workweek Weather	0.0d
A6890	Deck Curing	5.0d	28-Dec-16	05-Jan-17	Workweek Weather	0.0d
A9730	FRPS Approach Slab A	5.0d	28-Dec-16	05-Jan-17	Workweek Weather	19.0d
A9740	FRPS Approach Slab B	5.0d	06-Jan-17	12-Jan-17	Workweek Weather	19.0d
A6900	FRPS Parapet	7.0d	06-Jan-17	16-Jan-17	Workweek Weather	0.0d
A6910	Install Railing	5.0d	17-Jan-17	23-Jan-17	Workweek Weather	0.0d
A6920	Install Fence	5.0d	24-Jan-17	30-Jan-17	Workweek Weather	0.0d
A9160	Strip Overhangs	7.0d	31-Jan-17	08-Feb-17	Workweek Weather	0.0d
A6930	Groove Deck	2.0d	09-Feb-17	10-Feb-17	Workweek Weather	0.0d
SUP		216.0d	07-Mar-16	03-Jan-17		173.0d

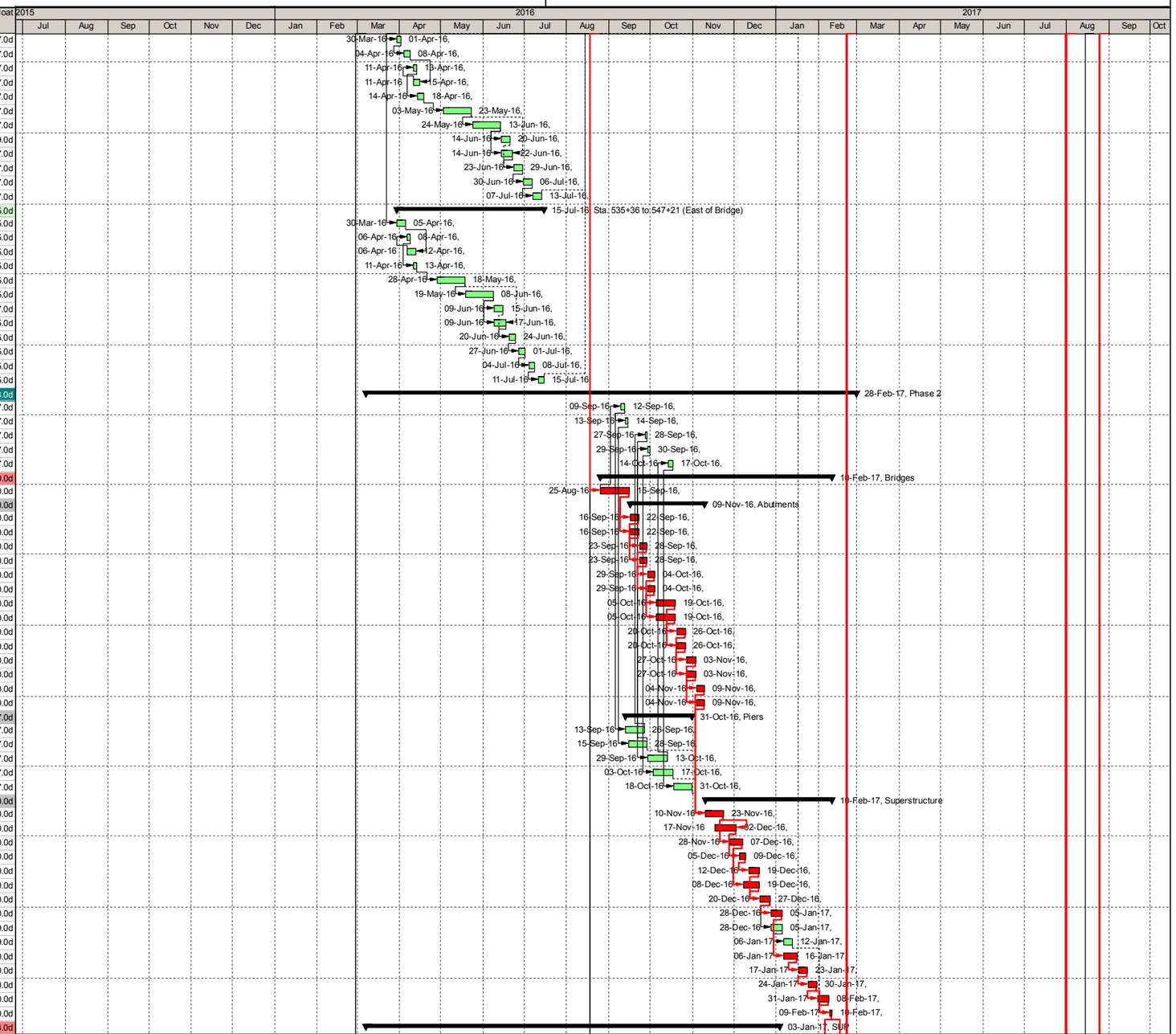

ABBREVIATIONS

A/C	Address Comments	SFA	Submit for Approval
R/A	Review and Approve	SFC	Submit for Comment
R/C	Review and Comment	FRPS	Form, Rebar, Pour, Strip

Activity ID	Activity Name	Planned Duration	Start	Finish	Calendar	Total Float
NW Quadrant		216.0d	07-Mar-16	03-Jan-17		173.0d
A7340	Clear and Grub	10.0d	07-Mar-16	21-Mar-16	Workweek Weather	160.1d
A7350	E/S	5.0d	21-Mar-16	28-Mar-16	Workweek Weather	160.1d
A7370	Strip Topsoil	5.0d	28-Mar-16	04-Apr-16	Workweek Weather	160.1d
A7380	Storm Sewer	15.0d	05-Apr-16	25-Apr-16	Grading	164.0d
A7390	Rough Grade	15.0d	26-Apr-16	16-May-16	Grading	164.0d
A7510	Ramp I Crossing	30.0d	16-May-16	28-Jun-16	Workweek Weather	169.1d
A7520	Ramp H Crossing	30.0d	28-Jun-16	10-Aug-16	Workweek Weather	169.1d
A7530	Ramp F Crossing	30.0d	10-Aug-16	22-Sep-16	Workweek Weather	169.1d
A7400	Fine Grade	10.0d	23-Sep-16	06-Oct-16	Grading	134.0d
A7420	Underdrain	21.0d	07-Oct-16	04-Nov-16	Grading	134.0d
A7430	Aggr. Base	21.0d	07-Nov-16	05-Dec-16	Grading	134.0d
A7470	SM	5.0d	06-Dec-16	12-Dec-16	Paving	134.0d
A7480	Dress Shoulder	3.0d	12-Dec-16	15-Dec-16	Workweek Weather	170.0d
A7490	Seed Landscaping	10.0d	15-Dec-16	03-Jan-17	Workweek Weather	170.0d
NE Quadrant		182.0d	07-Mar-16	16-Nov-16		23.0d
A7710	Clear and Grub	10.0d	07-Mar-16	21-Mar-16	Workweek Weather	23.1d
A7730	E/S	5.0d	21-Mar-16	28-Mar-16	Workweek Weather	23.1d
A7700	Strip Topsoil	5.0d	28-Mar-16	04-Apr-16	Workweek Weather	23.1d
A7720	Storm Sewer	15.0d	05-Apr-16	25-Apr-16	Grading	23.0d
A7740	Rough Grade	15.0d	26-Apr-16	16-May-16	Grading	23.0d
A9780	Retaining Walls	30.0d	26-Apr-16	07-Jun-16	Workweek Weather	67.0d
A7750	Ramp C Crossing	30.0d	16-May-16	28-Jun-16	Workweek Weather	22.1d
A7760	Ramp B Crossing	30.0d	28-Jun-16	10-Aug-16	Workweek Weather	22.1d
A7780	Fine Grade	10.0d	11-Aug-16	24-Aug-16	Grading	23.0d
A7790	Underdrain	21.0d	25-Aug-16	22-Sep-16	Grading	23.0d
A7800	Aggr. Base	21.0d	23-Sep-16	21-Oct-16	Grading	23.0d
A7820	SM	5.0d	24-Oct-16	28-Oct-16	Paving	23.0d
A7830	Dress Shoulder	3.0d	28-Oct-16	02-Nov-16	Workweek Weather	21.1d
A7840	Seed/Landscaping	10.0d	02-Nov-16	16-Nov-16	Workweek Weather	21.1d
Roadway Rt. 7 WBL		134.0d	25-Aug-16	28-Feb-17		133.0d
A9130	Bridge Tie-Ins	8.0d	13-Feb-17	23-Feb-17	Workweek Weather	0.0d
A9010	Stripe/Switch Traffic to Phase 3	3.0d	24-Feb-17	28-Feb-17	Workweek Weather	0.0d
Sta. 522+00 to 530+99 (West of Bridge)		82.0d	25-Aug-16	16-Dec-16		185.0d
A5840	Clear and Grub	5.0d	25-Aug-16	31-Aug-16	Workweek Weather	22.0d
A5860	Saw Cut	3.0d	01-Sep-16	06-Sep-16	Workweek Weather	22.0d
A5850	E/S	5.0d	01-Sep-16	08-Sep-16	Workweek Weather	22.0d
A5870	Strip Topsoil	3.0d	07-Sep-16	09-Sep-16	Workweek Weather	22.0d
A5890	Rough Grade	15.0d	12-Sep-16	30-Sep-16	Grading	23.0d
A5910	Storm Sewer	15.0d	03-Oct-16	21-Oct-16	Grading	23.0d
A5920	Underdrain	5.0d	24-Oct-16	28-Oct-16	Grading	23.0d
A5930	Subbase	5.0d	31-Oct-16	04-Nov-16	Grading	23.0d
A5900	Fine Grade	7.0d	31-Oct-16	08-Nov-16	Grading	171.0d
A5940	Curb & Gutter	7.0d	04-Nov-16	15-Nov-16	Workweek Weather	21.1d
A5950	BM	5.0d	16-Nov-16	22-Nov-16	Paving	23.0d
A5960	IM	5.0d	23-Nov-16	29-Nov-16	Paving	23.0d
A5980	Dress Shoulder	5.0d	29-Nov-16	06-Dec-16	Workweek Weather	36.1d
A5990	Seed	3.0d	06-Dec-16	09-Dec-16	Workweek Weather	36.1d
A6000	Guardrail	5.0d	09-Dec-16	16-Dec-16	Workweek Weather	36.1d
Sta. 535+36 to 547+21 (East of Bridge)		102.0d	25-Aug-16	13-Jan-17		29.0d
A7850	Clear and Grub	5.0d	25-Aug-16	31-Aug-16	Workweek Weather	6.0d
A7870	Saw Cut	3.0d	01-Sep-16	06-Sep-16	Workweek Weather	6.0d
A7860	E/S	5.0d	01-Sep-16	08-Sep-16	Workweek Weather	6.0d
A7880	Strip Topsoil	3.0d	07-Sep-16	09-Sep-16	Workweek Weather	6.0d
A7900	Rough Grade	15.0d	26-Sep-16	14-Oct-16	Grading	6.0d
A7920	Storm Sewer	15.0d	17-Oct-16	04-Nov-16	Grading	6.0d
A7930	Underdrain	5.0d	07-Nov-16	11-Nov-16	Grading	6.0d
A7910	Fine Grade	7.0d	14-Nov-16	22-Nov-16	Grading	6.0d
A7940	Subbase	5.0d	23-Nov-16	29-Nov-16	Grading	6.0d
A7950	Curb & Gutter	7.0d	30-Nov-16	08-Dec-16	Grading	6.0d
A7960	BM	5.0d	09-Dec-16	15-Dec-16	Paving	6.0d
A7970	IM	5.0d	16-Dec-16	22-Dec-16	Paving	6.0d
A7990	Dress Shoulder	5.0d	22-Dec-16	03-Jan-17	Workweek Weather	28.1d
A8000	Seed	3.0d	03-Jan-17	06-Jan-17	Workweek Weather	28.1d
A8010	Guardrail	5.0d	06-Jan-17	13-Jan-17	Workweek Weather	28.1d
BMP #1		43.0d	16-Dec-16	15-Feb-17		142.0d
A1760	E/S	4.0d	16-Dec-16	22-Dec-16	Workweek Weather	139.0d
A1770	Clear/ Grub	7.0d	22-Dec-16	05-Jan-17	Workweek Weather	139.0d
A1780	Access	7.0d	05-Jan-17	16-Jan-17	Workweek Weather	139.0d
A1790	Construct Basin	15.0d	16-Jan-17	06-Feb-17	Workweek Weather	139.0d
A1800	Jack Bore	7.0d	06-Feb-17	15-Feb-17	Workweek Weather	139.0d

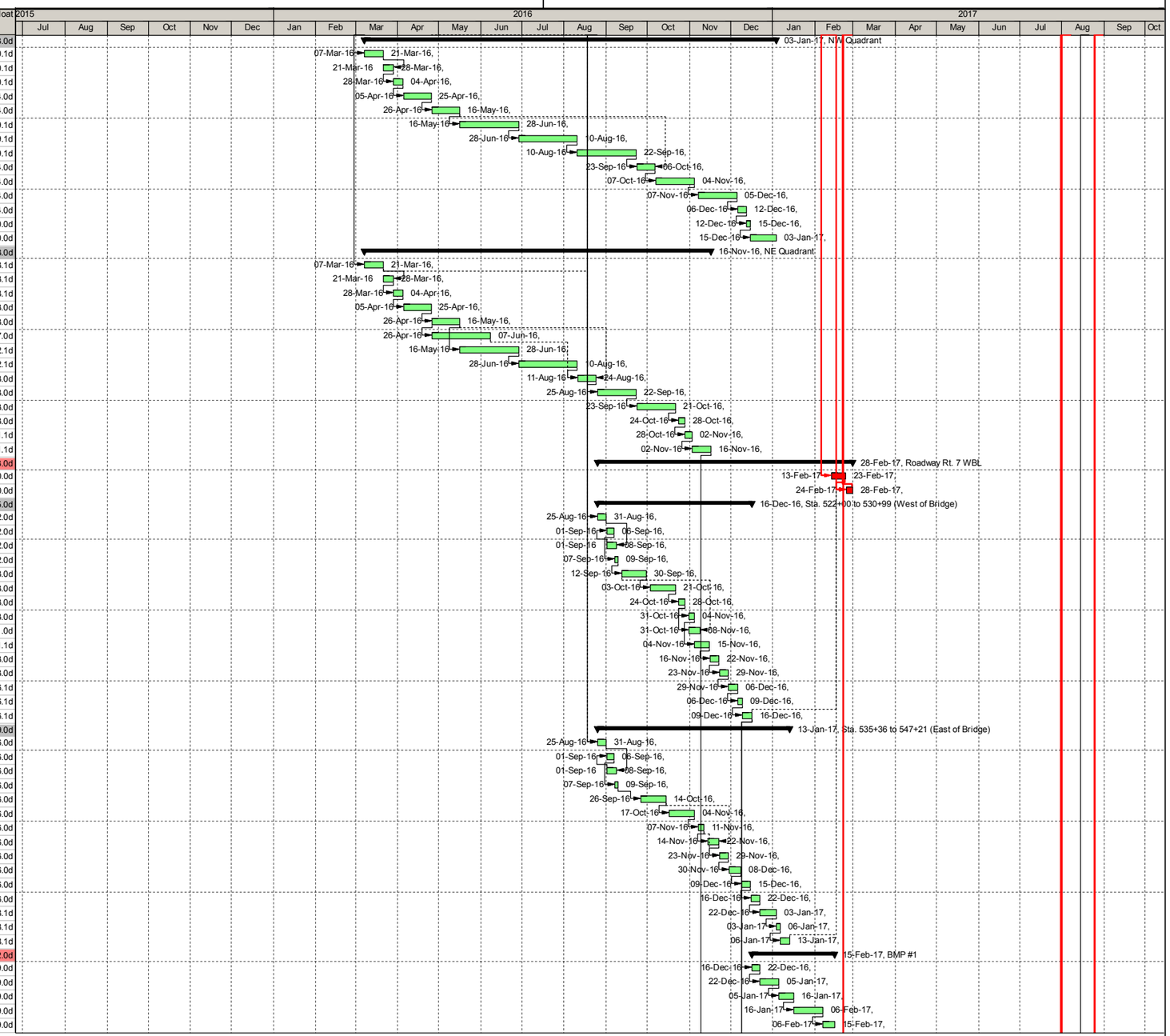

ABBREVIATIONS

A/C	Address Comments	SFA	Submit for Approval
R/A	Review and Approve	SFC	Submit for Comment
R/C	Review and Comment	FRPS	Form, Rebar, Pour, Strip

Activity ID	Activity Name	Planned Duration	Start	Finish	Calendar	Total Float
BMP #2		36.0d	16-Dec-16	06-Feb-17		149.0d
A9810	E/S	4.0d	16-Dec-16	22-Dec-16	Workweek Weather	146.0d
A9820	Clear/ Grub	7.0d	22-Dec-16	05-Jan-17	Workweek Weather	146.0d
A9830	Access	7.0d	05-Jan-17	16-Jan-17	Workweek Weather	146.0d
A9840	Construct Basin	15.0d	16-Jan-17	06-Feb-17	Workweek Weather	146.0d
Phase 3		188.0d	16-Nov-16	07-Aug-17		19.0d
A9490	Pier 1 MOT	2.0d	15-Mar-17	16-Mar-17	Workweek Weather	0.0d
A9530	Pier 5 MOT	2.0d	17-Mar-17	20-Mar-17	Workweek Weather	98.9d
A9510	Pier 3 MOT	2.0d	29-Mar-17	30-Mar-17	Workweek Weather	0.0d
A9520	Pier 4 MOT	2.0d	31-Mar-17	03-Apr-17	Workweek Weather	98.9d
A9500	Pier 2 MOT	2.0d	12-Apr-17	13-Apr-17	Workweek Weather	0.0d
Bridge		103.0d	01-Mar-17	21-Jul-17		30.0d
A6940	Remove Exist. Superstr.	15.0d	01-Mar-17	21-Mar-17	Workweek Weather	0.0d
Abutments		55.0d	22-Mar-17	06-Jun-17		63.0d
A6950	SOE Abut. A	5.0d	22-Mar-17	28-Mar-17	Workweek Weather	61.9d
A6960	SOE Abut. B	5.0d	22-Mar-17	28-Mar-17	Workweek Weather	61.9d
A6970	Rem. Portion of Abut. A	5.0d	29-Mar-17	04-Apr-17	Workweek Weather	61.9d
A6980	Rem. Portion of Abut. B	5.0d	29-Mar-17	04-Apr-17	Workweek Weather	61.9d
A6990	Drive Pile Abut. A	5.0d	05-Apr-17	11-Apr-17	Workweek Weather	61.9d
A7000	Drive Pile Abut. B	5.0d	05-Apr-17	11-Apr-17	Workweek Weather	61.9d
A7010	Retaining Wall Structure Abut. A	20.0d	12-Apr-17	09-May-17	Workweek Weather	61.9d
A7020	Retaining Wall Structure Abut. B	20.0d	12-Apr-17	09-May-17	Workweek Weather	61.9d
A7030	FRPS Abut. A Footing	6.0d	10-May-17	17-May-17	Workweek Weather	61.9d
A7040	FRPS Abut. B Footing	6.0d	10-May-17	17-May-17	Workweek Weather	61.9d
A7050	FRPS Abut. A Seat	6.0d	18-May-17	25-May-17	Workweek Weather	61.9d
A7060	FRPS Abut. B Seat	6.0d	18-May-17	25-May-17	Workweek Weather	61.9d
A7070	Coping Abut. A	7.0d	26-May-17	06-Jun-17	Workweek Weather	61.9d
A7080	Coping Abut. B	7.0d	26-May-17	06-Jun-17	Workweek Weather	61.9d
Piers		28.0d	17-Mar-17	25-Apr-17		93.0d
A7190	Rehab Pier 1	8.0d	17-Mar-17	28-Mar-17	Workweek Weather	0.0d
A7230	Rehab Pier 5	8.0d	21-Mar-17	30-Mar-17	Workweek Weather	98.9d
A7210	Rehab Pier 3	8.0d	31-Mar-17	11-Apr-17	Workweek Weather	0.0d
A7220	Rehab Pier 4	8.0d	04-Apr-17	13-Apr-17	Workweek Weather	98.9d
A7200	Rehab Pier 2	8.0d	14-Apr-17	25-Apr-17	Workweek Weather	0.0d
Superstructure		63.0d	26-Apr-17	21-Jul-17		0.0d
A7240	Erect Girders	10.0d	26-Apr-17	09-May-17	Workweek Weather	0.0d
A7250	Install Overhangs	12.0d	01-May-17	16-May-17	Workweek Weather	0.0d
A9690	FRPS Integral Backwall A	8.0d	10-May-17	19-May-17	Workweek Weather	0.0d
A7260	SIP Deck Forms	5.0d	17-May-17	23-May-17	Workweek Weather	0.0d
A7270	Deck Rebar	6.0d	24-May-17	01-Jun-17	Workweek Weather	0.0d
A9700	FRPS Integral Backwall B	8.0d	22-May-17	01-Jun-17	Workweek Weather	0.0d
A7280	Pour Deck	5.0d	02-Jun-17	08-Jun-17	Workweek Weather	0.0d
A7290	Deck Curing	5.0d	09-Jun-17	15-Jun-17	Workweek Weather	0.0d
A9710	FRPS Approach Slab A	5.0d	09-Jun-17	15-Jun-17	Workweek Weather	18.0d
A9720	FRPS Approach Slab B	5.0d	16-Jun-17	22-Jun-17	Workweek Weather	18.0d
A7300	FRPS Parapet	6.0d	16-Jun-17	23-Jun-17	Workweek Weather	0.0d
A7310	Install Railing	5.0d	26-Jun-17	30-Jun-17	Workweek Weather	0.0d
A7320	Install Fence	5.0d	03-Jul-17	10-Jul-17	Workweek Weather	0.0d
A9170	Strip Overhangs	7.0d	11-Jul-17	19-Jul-17	Workweek Weather	0.0d
A7330	Groove Deck	2.0d	20-Jul-17	21-Jul-17	Workweek Weather	0.0d
Roadway Rt. 7 EBL		114.0d	01-Mar-17	07-Aug-17		0.0d
A9140	Bridge Tie-Ins	8.0d	24-Jul-17	02-Aug-17	Workweek Weather	0.0d
A9030	Stripe/Switch Traffic to Phase 4	3.0d	03-Aug-17	07-Aug-17	Workweek Weather	0.0d
Sta. 522+00 to 530+99 (West of Bridge)		89.0d	01-Mar-17	03-Jul-17		22.0d
A8020	Clear and Grub	5.0d	01-Mar-17	07-Mar-17	Workweek Weather	23.0d
A8040	Saw Cut	3.0d	08-Mar-17	10-Mar-17	Workweek Weather	23.0d
A8030	E/S	5.0d	08-Mar-17	14-Mar-17	Workweek Weather	23.0d
A8050	Strip Topsoil	3.0d	13-Mar-17	15-Mar-17	Workweek Weather	23.0d
A8070	Rough Grade	15.0d	16-Mar-17	05-Apr-17	Grading	23.0d
A8060	Storm Sewer	15.0d	06-Apr-17	26-Apr-17	Grading	23.0d
A8100	Underdrain	5.0d	27-Apr-17	03-May-17	Grading	23.0d
A8080	Fine Grade	7.0d	04-May-17	12-May-17	Grading	23.0d
A8110	Subbase	5.0d	15-May-17	19-May-17	Grading	23.0d
A8120	Curb & Gutter	7.0d	19-May-17	31-May-17	Workweek Weather	22.1d
A8130	BM	5.0d	01-Jun-17	07-Jun-17	Paving	22.0d
A8140	IM	5.0d	08-Jun-17	14-Jun-17	Paving	22.0d
A8160	Dress Shoulder	5.0d	14-Jun-17	21-Jun-17	Workweek Weather	21.1d
A8170	Seed	3.0d	21-Jun-17	26-Jun-17	Workweek Weather	21.1d
A8180	Guardrail	5.0d	26-Jun-17	03-Jul-17	Workweek Weather	21.1d
Sta. 535+36 to 547+21 (East of Bridge)		99.0d	01-Mar-17	17-Jul-17		12.0d
A8190	Clear and Grub	5.0d	01-Mar-17	07-Mar-17	Workweek Weather	13.0d
A8210	Saw Cut	3.0d	08-Mar-17	10-Mar-17	Workweek Weather	13.0d

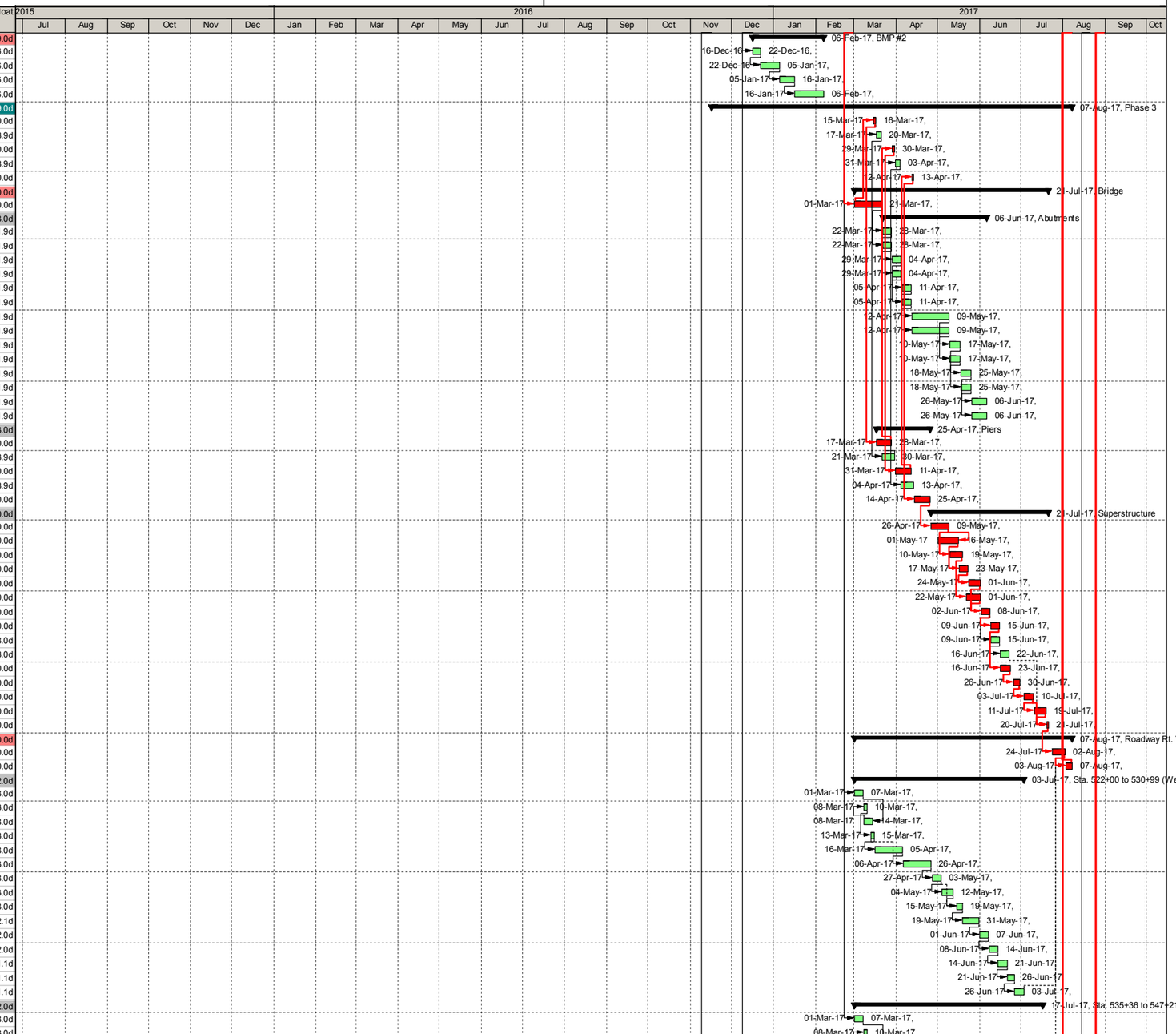

WAGMAN
MAINTAIN GENERATIONS - SINCE 1902

ABBREVIATIONS

A/C	Address Comments	SFA	Submit for Approval
R/A	Review and Approve	SFC	Submit for Comment
R/C	Review and Comment	FRPS	Form, Rebar, Pour, Strip

Activity ID	Activity Name	Planned Duration	Start	Finish	Calendar	Total Float
A8200	E/S	5.0d	08-Mar-17	14-Mar-17	Workweek Weather	13.0d
A8220	Strip Topsoil	3.0d	13-Mar-17	15-Mar-17	Workweek Weather	13.0d
A8240	Rough Grade	15.0d	30-Mar-17	19-Apr-17	Grading	13.0d
A8260	Storm Sewer	15.0d	20-Apr-17	10-May-17	Grading	13.0d
A8270	Underdrain	5.0d	11-May-17	17-May-17	Grading	13.0d
A8250	Fine Grade	7.0d	18-May-17	26-May-17	Grading	13.0d
A8280	Subbase	5.0d	29-May-17	02-Jun-17	Grading	13.0d
A8290	Curb & Gutter	7.0d	02-Jun-17	13-Jun-17	Workweek Weather	13.1d
A8300	BM	5.0d	14-Jun-17	20-Jun-17	Paving	13.0d
A8310	IM	5.0d	21-Jun-17	27-Jun-17	Paving	13.0d
A8330	Dress Shoulder	5.0d	27-Jun-17	05-Jul-17	Workweek Weather	12.1d
A8340	Seed	3.0d	05-Jul-17	10-Jul-17	Workweek Weather	12.1d
A8350	Guardrail	5.0d	10-Jul-17	17-Jul-17	Workweek Weather	12.1d
SUP		186.0d	16-Nov-16	03-Aug-17		21.0d
SW Quadrant		153.0d	16-Dec-16	19-Jul-17		32.0d
A8370	Clear and Grub	10.0d	16-Dec-16	04-Jan-17	Workweek Weather	36.1d
A8390	E/S	5.0d	04-Jan-17	11-Jan-17	Workweek Weather	36.1d
A8360	Strip Topsoil	5.0d	11-Jan-17	18-Jan-17	Workweek Weather	61.1d
A9020	Noise Wall	45.0d	11-Jan-17	16-Mar-17	Workweek Weather	36.1d
A8380	Storm Sewer	15.0d	01-Mar-17	21-Mar-17	Grading	33.0d
A8400	Rough Grade	15.0d	22-Mar-17	11-Apr-17	Grading	33.0d
A8440	Fine Grade	10.0d	12-Apr-17	25-Apr-17	Grading	33.0d
A8450	Underdrain	21.0d	26-Apr-17	24-May-17	Grading	33.0d
A8460	Aggr. Base	21.0d	25-May-17	22-Jun-17	Grading	33.0d
A8480	SM	5.0d	23-Jun-17	29-Jun-17	Paving	33.0d
A8490	Dress Shoulder	3.0d	29-Jun-17	05-Jul-17	Workweek Weather	32.0d
A8500	Seed/Landscaping	10.0d	05-Jul-17	19-Jul-17	Workweek Weather	32.0d
SE Quadrant		186.0d	16-Nov-16	03-Aug-17		21.0d
A8520	Clear and Grub	10.0d	16-Nov-16	02-Dec-16	Workweek Weather	21.1d
A8540	E/S	5.0d	02-Dec-16	09-Dec-16	Workweek Weather	21.1d
A8510	Strip Topsoil	5.0d	09-Dec-16	16-Dec-16	Workweek Weather	21.1d
A8560	Ramp E Crossing	30.0d	16-Dec-16	01-Feb-17	Workweek Weather	21.1d
A8530	Storm Sewer	15.0d	19-Dec-16	07-Mar-17	Grading	28.0d
A8570	Ramp D Crossing	30.0d	01-Feb-17	16-Mar-17	Workweek Weather	21.1d
A8550	Rough Grade	15.0d	08-Mar-17	28-Mar-17	Grading	28.0d
A9790	Retaining Walls	30.0d	08-Mar-17	18-Apr-17	Workweek Weather	28.0d
A8580	Ramp A Crossing	30.0d	17-Mar-17	27-Apr-17	WAGMAN	21.0d
A8590	Fine Grade	10.0d	28-Apr-17	11-May-17	Grading	21.0d
A8600	Underdrain	21.0d	12-May-17	09-Jun-17	Grading	21.0d
A8610	Aggr. Base	21.0d	12-Jun-17	10-Jul-17	Grading	21.0d
A8630	SM	5.0d	11-Jul-17	17-Jul-17	Paving	21.0d
A8640	Dress Shoulder	3.0d	17-Jul-17	20-Jul-17	Workweek Weather	21.0d
A8650	Seed/Landscaping	10.0d	20-Jul-17	03-Aug-17	Workweek Weather	21.0d
Phase 4		19.0d	08-Aug-17	01-Sep-17		0.0d
Bridge		7.0d	08-Aug-17	16-Aug-17		0.0d
A8710	FPSC Median	7.0d	08-Aug-17	16-Aug-17	Workweek Weather	0.0d
Roadway		19.0d	08-Aug-17	01-Sep-17		0.0d
A9040	Mill/Overlay	3.0d	17-Aug-17	21-Aug-17	Workweek Weather	0.0d
A9050	Final Paving	5.0d	22-Aug-17	28-Aug-17	Paving	0.0d
A9800	Permanent Signage	15.0d	08-Aug-17	28-Aug-17	Workweek Weather	3.9d
A9060	Final Striping	4.0d	28-Aug-17	01-Sep-17	Workweek Weather	0.0d
Sta. 522+00 to 530+99 (West of Bridge)		7.0d	08-Aug-17	16-Aug-17		0.0d
A8720	FPSC MS-1A	7.0d	08-Aug-17	16-Aug-17	Workweek Weather	0.0d
Sta. 535+36 to 547+21 (East of Bridge)		7.0d	08-Aug-17	16-Aug-17		0.0d
A8730	FPSC MS-2	7.0d	08-Aug-17	16-Aug-17	Workweek Weather	0.0d

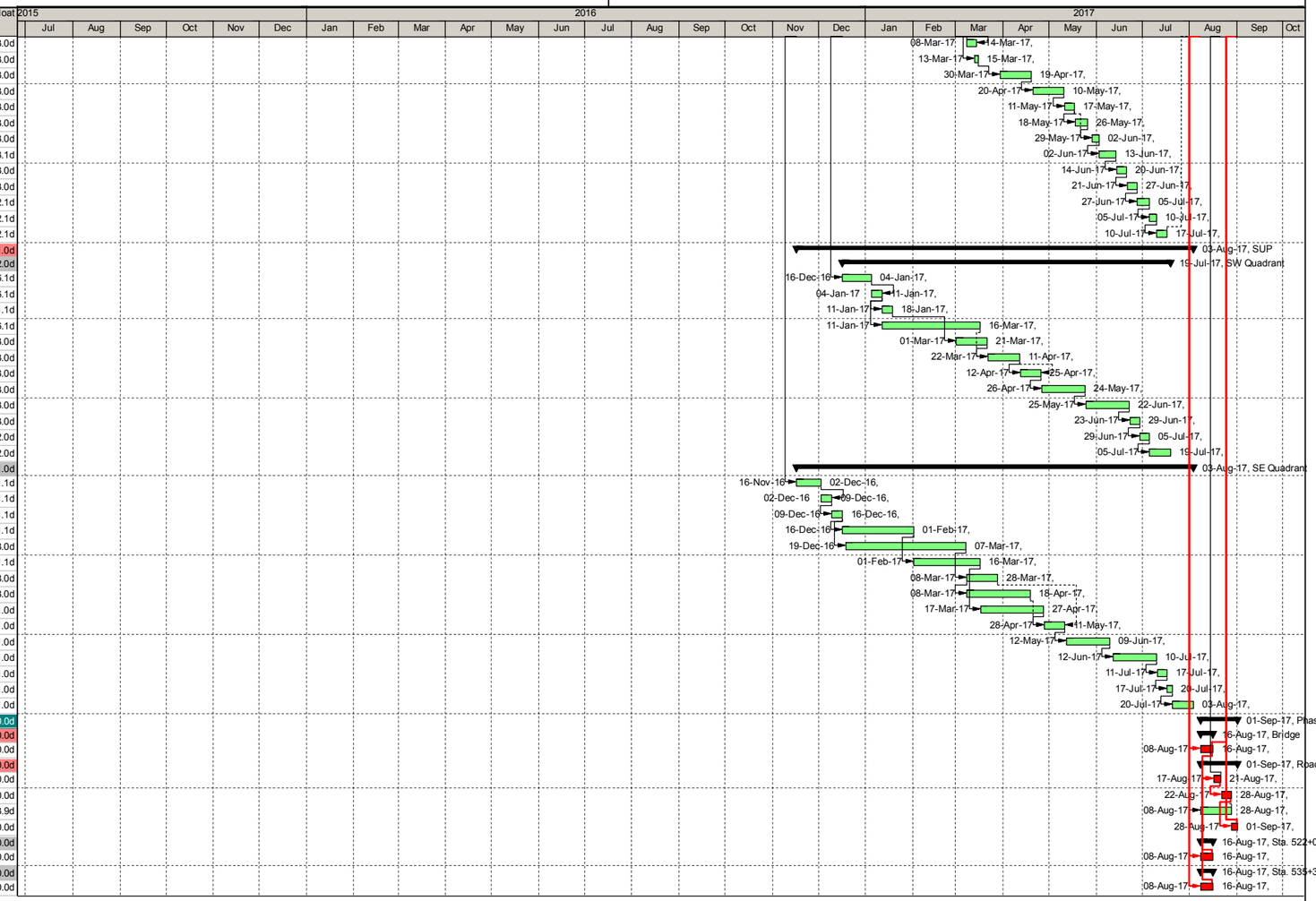

ABBREVIATIONS

A/C	Address Comments	SFA	Submit for Approval
R/A	Review and Approve	SFC	Submit for Comment
R/C	Review and Comment	FRPS	Form, Rebar, Pour, Strip