Overview: This Mathcad worksheet is intended to analyze gusset plates using Load Factor Design. Gusset plates are analyzed for shear and axial force effects by the conventional "Method-of-Section" procedures. It should be noted that this Mathcad worksheet only investigates three common sections of interest, two vertical and one horizontal section. Additional sections should be investigated at joints that have a break in the alignment of the chord and/or unusual joint configurations. Member connections are analyzed for bolt/rivet capacity, block shear capacity and Whitmore section stresses.

The calculations assume each truss member is connected to each gusset plate if more than one gusset plate is entered (N). The bottom chord is assumed continuous (either spliced or non-jointed) across the panel point. The calculations do not check the base material capacity of the truss members.

Disclaimer: This worksheet and sample calculations outline an acceptable method for analyzing the capacity of existing truss gusset plates. There may be other acceptable procedures for this analysis. While this Mathcad sheet has been checked, it should be used by an engineer familiar with truss and gusset plate analysis. Sound engineering judgement is required to apply this method to individual situations and to bridges that may vary from this example.

Revisions: The February 2009 Baker Revision included the following additional calculations and modifications to the MathCAD file provided by VDOT:

- Added Exterior/End Fastener Capacity
- Added Truss Member base material check
- Modified the file such that Tension and Compression checks are completed for each member
- Added Rating Factor Summaries for each member
- Added Controlling Member Designation in the Rating Summary
- Added input for Member Force Reduction due to Chord Splice Plates
- Added controlling failure check (Block Shear vs. Net Section Fracture)

EXAMPLE:

$kip := 1000 \cdot lbf$ $\quad$ $Ton := 2000 \cdot lbf$

$Span := 75 \cdot ft$ $\quad$ $HS := 36 \cdot Ton$ $\quad$ Input the tonnage for the vehicle, ex.(HS 20 Truck = 36 ton)

Enter **0** if live loads already include impact. Otherwise Enter **1** $\quad$ $MI := 1$

Impact Factor $\quad$ $IM := \left(\dfrac{50}{Span \cdot \dfrac{1}{ft} + 125} \right) \cdot MI$ $\quad$ $IM = 0.25$ $\quad$ (ALFD 3.8.2.1)

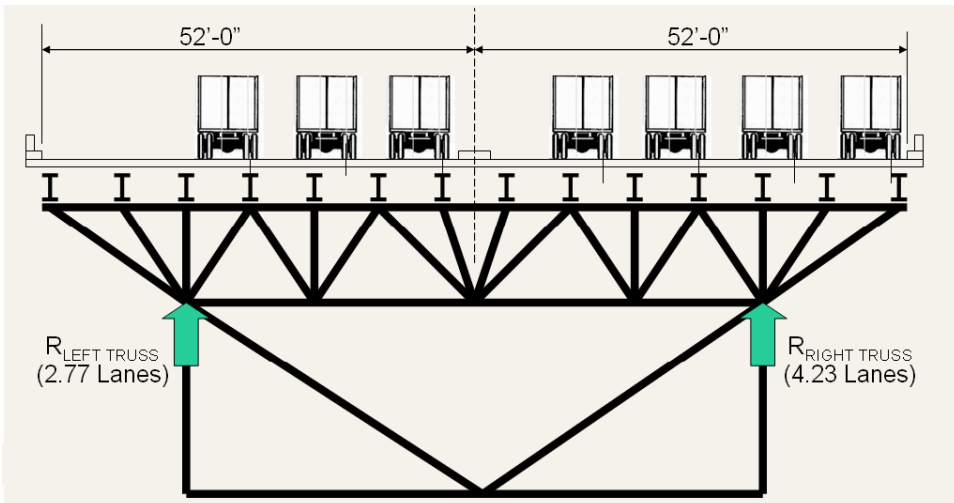

Figure-1 (For reference only)

Distribution Factor for the truss where the Gusset Plate is located: $\quad$ $DF := 1.06$

Multiple Presence Factor $\quad$ $m := 1.0$ $\quad$ (ALFD 3.12.1)

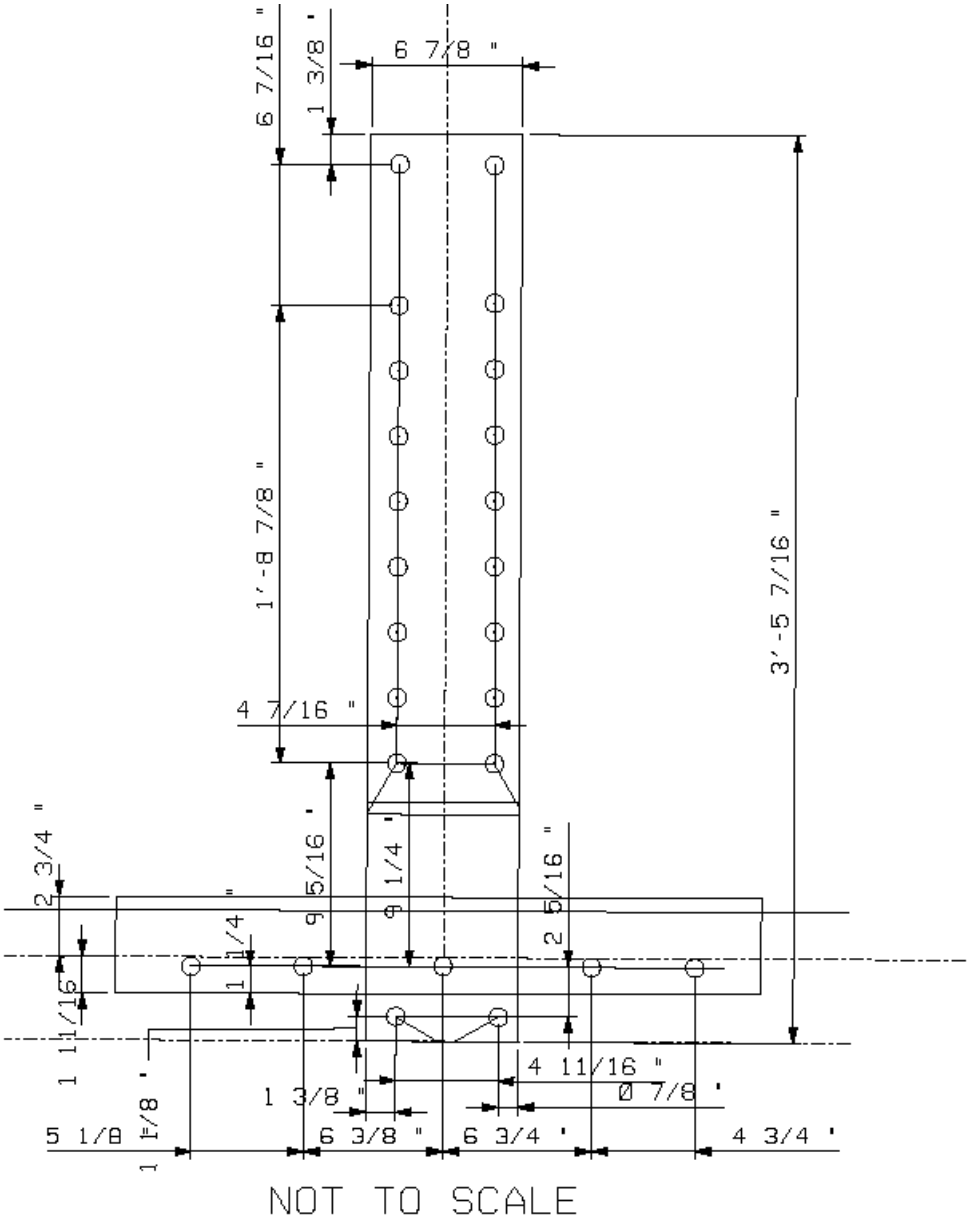
6 7/16 "
1 3/8 "
6 7/8 "
1'-8 7/8 "
3'-5 7/16 "
4 7/16 "
2 3/4 "
9 5/16 "
9 1/4 "
2 5/16 "
1 1/4 "
1 11/16 "
1 3/8 "
4 11/16 "
0 7/8 "
5 1/8 "
1 1/8 "
6 3/8 "
6 3/4 "
4 3/4 "
NOT TO SCALE

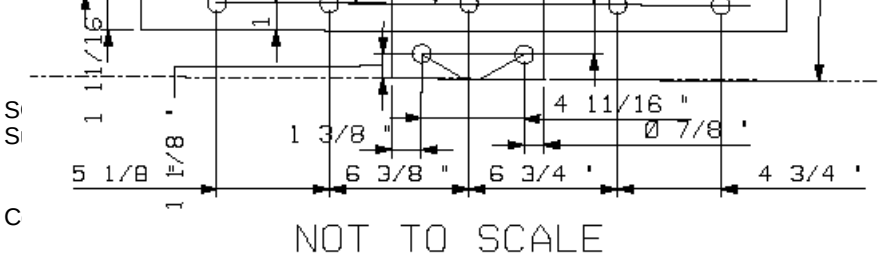
4 11/16 "
Ø 7/8 "
1 3/8 "
5 1/8 "
6 3/8 "
6 3/4 "
4 3/4 "
NOT TO SCALE

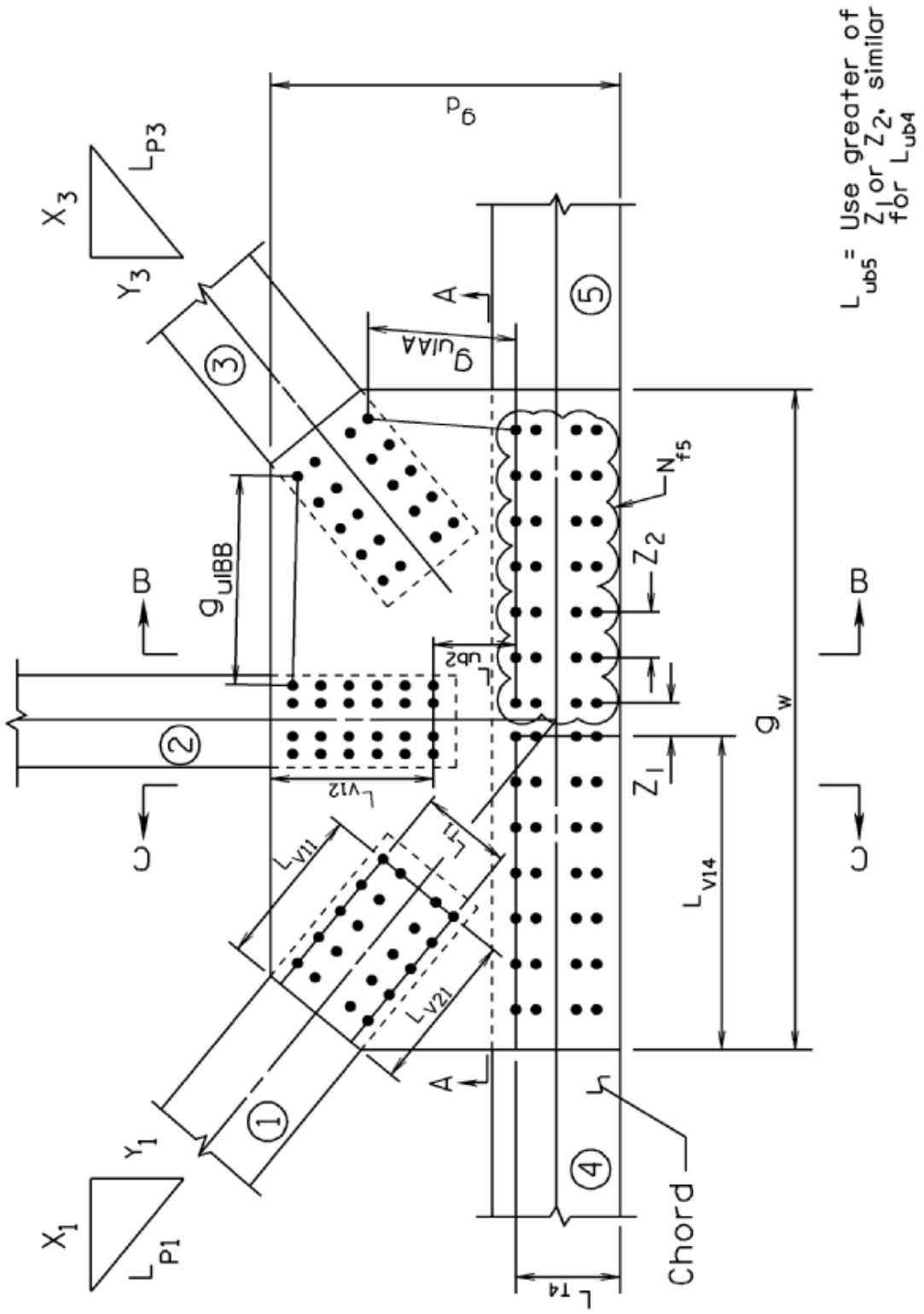
L_{ub5} = Use greater of Z_1 or Z_2, similar for L_{ub4}
g_d
X_3
L_{P3}
Y_3
g_{uIAA}
g_{uIBB}
N_{f5}
Z_2
Z_1
g_w
L_{ub2}
L_{v12}
L_{v11}
L_{v21}
L_{v14}
L_{t1}
L_{t4}
X_1
L_{P1}
Y_1
Chord
A
B
C
1
2
3
4
5

Figure-2

Member Loads: Sign convention: **(+)** Compression, **(-)** Tension

Chord splices (when applicable): To determine the forces transferred to the gusset plate(s) from members 4 and 5, reduce the total chord force by the capacity of the splice plates. For example, if the capacity of the splice plates is 43% of the total chord force, then 57% of the total chord force is carried by the gusset plate.

	Member (1)	Member (2)	Member (3)	Member (4)	Member (5)
Dead Loads:	$P1_{DL} := 0 \cdot kip$	$P2_{DL} := -26.73 \cdot kip$	$P3_{DL} := 0 \cdot kip$	$P4_{DL} := -83.17 \cdot kip$	$P5_{DL} := -83.17 \cdot kip$
Live Loads:	$P1_{LL} := 0 \cdot kip$	$P2_{LL} := -35.6 \cdot kip$	$P3_{LL} := 0 \cdot kip$	$P4_{LL} := -69.49 \cdot kip$	$P5_{LL} := -69.49 \cdot kip$
Chord Splice Data:			Percentage of Force carried by the Gusset Plate:	$GP_4 := 0 \cdot \%$	$GP_5 := 0 \cdot \%$
			Percentage of Force transfered by the Fasteners:	$BP_4 := 0 \cdot \%$	$BP_5 := 0 \cdot \%$
Member Thickness:	$m_{t1} := \frac{0}{0} \cdot in$	$m_{t2} := \frac{3}{8} \cdot in$	$m_{t3} := \frac{0}{0} \cdot in$	$m_{t4} := \frac{0.563}{1} \cdot in$	$m_{t5} := \frac{0.563}{1} \cdot in$

Note: The input format for live load forces are intended to be for a single truck or lane without impact. If live load forces already include distribution factors, set DF and m in previous page to 1. Live loads should not correspond to a specific live load case (i.e., maximum values for each member should be entered).

Vertical and Diagonal Member Components:

$X_1 := 0 \cdot ft$ $\quad Y_1 := 0 \cdot ft$ $\quad L_{P1} := \sqrt{\left(X_1^2 + Y_1^2\right)}$ $\quad L_{P1} = 0$

$X_2 := 0 \cdot ft$ $\quad Y_2 := 10.5 \cdot ft$ $\quad L_{P2} := \sqrt{\left(X_2^2 + Y_2^2\right)}$ $\quad L_{P2} = 10.5\,ft$

$X_3 := 0 \cdot ft$ $\quad Y_3 := 0 \cdot ft$ $\quad L_{P3} := \sqrt{\left(X_3^2 + Y_3^2\right)}$ $\quad L_{P3} = 0$

Gusset Plate Properties:

Number of gusset plates: $N := 2$

Thickness of gusset plate: $g_t := \frac{1}{2} \cdot in$

Depth of gusset plate: $g_d := 3.42 \cdot ft$

Width of gusset plate: $g_w := 0.531 \cdot ft$

Depth of the chord member: $C_{depth} := 6.0 \cdot in$

Width of vertical member: $w_{vertical} := 6.25 \cdot in$

Unsupported length for Section A-A, B-B & C-C (Distance between bolts as shown in Figure 2): $g_{ulAA} := 0 \cdot in$ $\quad g_{ulBB} := 0 \cdot in$ $\quad g_{ulCC} := 0 \cdot in$

Effective length factor: $k := 1.2$ (ALFD 10.54.12)

Corrosion of Gusset along the section (Average thickness): $C_{AA} := 0.0 \cdot in$ $\quad C_{BB} := 0.0 \cdot in$ $\quad C_{CC} := 0.0 \cdot in$

Fastener details: Corrosion in the bolts should be accounted in the diameter of the bolt

Diameter of fasteners: $\phi_b := 0.75 \cdot in$ $A_{bolt} := \frac{\pi}{4}\phi_b^2$ $A_{bolt} = 0.442 \cdot in^2$

Alternate diameter of fasteners if more than one diameter is used: $\phi_{b2} := 0 \cdot in$ $A_{bolt2} := \frac{\pi}{4}\phi_{b2}^2$ $A_{bolt2} = 0 \cdot in^2$

In calculating the effective gross section yeild resistance, if the area of the net section is less than 85% of the gross area, gross area is reduced by that % difference. $\beta := 0.15$

	Member (1)	Member (2)	Member (3)	Member (4)	Member (5)
Area of fasteners:	$A_{f1} := A_{bolt}$	$A_{f2} := A_{bolt}$	$A_{f3} := A_{bolt}$	$A_{f4} := A_{bolt}$	$A_{f5} := A_{bolt}$

Member connection details:

Fastener shear:

Number of fasteners:	$N_{f1} := 0$	$N_{f2} := 18$	$N_{f3} := 0$	$N_{f4} := 2$	$N_{f5} := 2$
Number of end fasteners :	$N_{endf1} := 0$	$N_{endf2} := 2$	$N_{endf3} := 0$	$N_{endf4} := 2$	$N_{endf5} := 2$
Number of shear planes per fastener:	$N_{shear1} := 0$	$N_{shear2} := 1$	$N_{shear3} := 0$	$N_{shear4} := 1$	$N_{shear5} := 1$

Bearing of fasteners:

Avg. clear distance between holes (spa. - (ϕ_b + 1/16"):	$L_{c1} := 0 \cdot in$	$L_{c2} := 2.17 \cdot in$	$L_{c3} := 0 \cdot in$	$L_{c4} := 1.36 \cdot in$	$L_{c5} := 1.71 \cdot in$
Avg. end distance from holes to edge of plate (Edge Distance - 1/2(ϕ_b + 1/16"):	$L_{ce1} := 0 \cdot in$	$L_{ce2} := 0.969 \cdot in$	$L_{ce3} := 0 \cdot in$	$L_{ce4} := 0.969 \cdot in$	$L_{ce5} := 0.969 \cdot in$
Avg. end distance from holes to edge of truss member (Edge Distance - 1/2(ϕ_b + 1/16"):	$L_{cem1} := 0 \cdot in$	$L_{cem2} := 0.969 \cdot in$	$L_{cem3} := 0 \cdot in$	$L_{cem4} := 0.969 \cdot in$	$L_{cem5} := 0.969 \cdot in$

Block Shear:

Length in tension, Lt: (Gusset Plate)	$L_{t1} := 0 \cdot in$	$L_{t2} := 4.4375 \cdot in$	$L_{t3} := 0 \cdot in$	$L_{t4} := 3.438 \cdot in$	$L_{t5} := 3.438 \cdot in$
Length in tension, Ltm: (Truss Member)	$L_{tm1} := 0 \cdot in$	$L_{tm2} := 2.47 \cdot in$	$L_{tm3} := 0 \cdot in$	$L_{tm4} := 3.438 \cdot in$	$L_{tm5} := 3.438 \cdot in$

Block Shear (continued):

Number of holes along Lt:	$N_{holesT1} := 0$	$N_{holesT2} := 2$	$N_{holesT3} := 0$	$N_{holesT4} := 2$	$N_{holesT5} := 2$
Length in shear, Lv1: (Gusset Plate)	$L_{v11} := 0 \cdot in$	$L_{v12} := 28.69 \cdot in$	$L_{v13} := 0 \cdot in$	$L_{v14} := 3.52 \cdot in$	$L_{v15} := 3.42 \cdot in$
Length in shear, Lvm1: (Truss Member)	$L_{vm11} := 0 \cdot in$	$L_{vm12} := 28.69 \cdot in$	$L_{vm13} := 0 \cdot in$	$L_{vm14} := 3.52 \cdot in$	$L_{vm15} := 3.42 \cdot in$
Number of holes along Lv1:	$N_{holesV11} := 0$	$N_{holesV12} := 9$	$N_{holesV13} := 0$	$N_{holesV14} := 1$	$N_{holesV15} := 1$
Length in shear, Lv2:	$L_{v21} := 0 \cdot in$	$L_{v22} := 28.69 \cdot in$	$L_{v23} := 0 \cdot in$		
Length in shear, Lvm2:	$L_{vm21} := 0 \cdot in$	$L_{vm22} := 28.69 \cdot in$	$L_{vm23} := 0 \cdot in$	$L_{vm24} := 0 \cdot in$	$L_{vm25} := 0 \cdot in$
Number of holes along Lv2:	$N_{holesV21} := 0$	$N_{holesV22} := 9$	$N_{holesV23} := 0$	$N_{holesV24} := 1$	$N_{holesV25} := 1$

Gross Section Yielding:

Whitmore section length:	$L_{ws1} := 0 \cdot in$	$L_{ws2} := 6.375 \cdot in$	$L_{ws3} := 0 \cdot in$	$L_{ws4} := 3.44 \cdot in$	$L_{ws5} := 3.44 \cdot in$
Unbraced length:	$L_{ub1} := 0 \cdot in$	$L_{ub2} := 9.25 \cdot in$	$L_{ub3} := 0 \cdot in$	$L_{ub4} := 0 \cdot in$	$L_{ub5} := 0 \cdot in$

Member Fractrure:

	$A_{net1} := 0 \cdot in^2$	$A_{net2} := 6.93 \cdot in^2$	$A_{net3} := 0 \cdot in^2$	$A_{net4} := 7.09 \cdot in^2$	$A_{net5} := 7.09 \cdot in^2$

Average thickness of corrosion (inches) to the gusset plate at the bolt locations in each member.

$C_1 := 0.0 \cdot in$	$C_2 := 0.0 \cdot in$	$C_3 := 0.0 \cdot in$	$C_4 := 0.0 \cdot in$	$C_5 := 0.0 \cdot in$

Average thickness of corrosion (inches) to the truss member at the bolt locations in each member.

$C_{m1} := 0.0 \cdot in$	$C_{m2} := 0.0 \cdot in$	$C_{m3} := 0.0 \cdot in$	$C_{m4} := 0.109 \cdot in$	$C_{m5} := 0.105 \cdot in$

ALLOWABLE STRESSES:

Truss Member Properties:

Fy - Member: $F_{ym1} := 30000 \cdot psi$ $F_{ym2} := 30000 \cdot psi$ $F_{ym3} := 30000 \cdot psi$ $F_{ym4} := 30000 \cdot psi$ $F_{ym5} := 30000 \cdot psi$

Fu - Member: $F_{um1} := 60000 \cdot psi$ $F_{um2} := 60000 \cdot psi$ $F_{um3} := 60000 \cdot psi$ $F_{um4} := 60000 \cdot psi$ $F_{um5} := 60000 \cdot psi$

Gusset Plate Properties:

$F_y := 30000 \cdot psi$ For members with unknown properties, see Table 6.6.2.1-2 in AASHTO Manual for Condition Evaluation of Bridges.

$F_U := 60000 psi$ Specified minimum tensile strength of the connected material

Following are the four levels of rating in LFD method. Dead load and live load factors vary for these ratings:

Case		Dead Load Factors	Live Load Factors
1 -Inventory	$\sigma_1 := F_y$	$DL_1 := 1.3$	$LL_1 := 2.17$
2 -Operating	$\sigma_2 := F_y$	$DL_2 := 1.3$	$LL_2 := 1.3$

In Axial Tension: $f_{ten} := F_y$

In Shear: $f_v := \frac{F_y}{1.35\sqrt{3}}$

Modulus of elasticity: $E_s := 29000000 \cdot psi$

Design Strength of Fasteners: $\sigma_{Design} := 18000 \cdot psi$ Shown for Power Driven Rivets ASTM A502, Shear - Grade 2, (ALFD Table 10.56A)

Connection Analysis:

FORCE CONVENTION: **TENSION (-)**
COMPRESSION (+).

$P_{2DL} := P2_{DL}$ $P_{2LL} := m \cdot DF \cdot (1 + IM) \cdot P2_{LL}$

$P_{2DL} = -26.73 \cdot kip$ $P_{2LL} = -47.17 \cdot kip$

$M2_T :=$ if$\left(P_{2DL} > 0, \text{"MEMBER IS IN COMPRESSION, TENSION CHECK IS NOT REQUIRED"}, \text{"MEMBER IS IN TI}\right.$

$M2_T =$ "MEMBER IS IN TENSION, TENSION CHECK IS REQUIRED"

Analysis of Gusset Plate @ Vertical (Member 2): (TENSION CHECK)

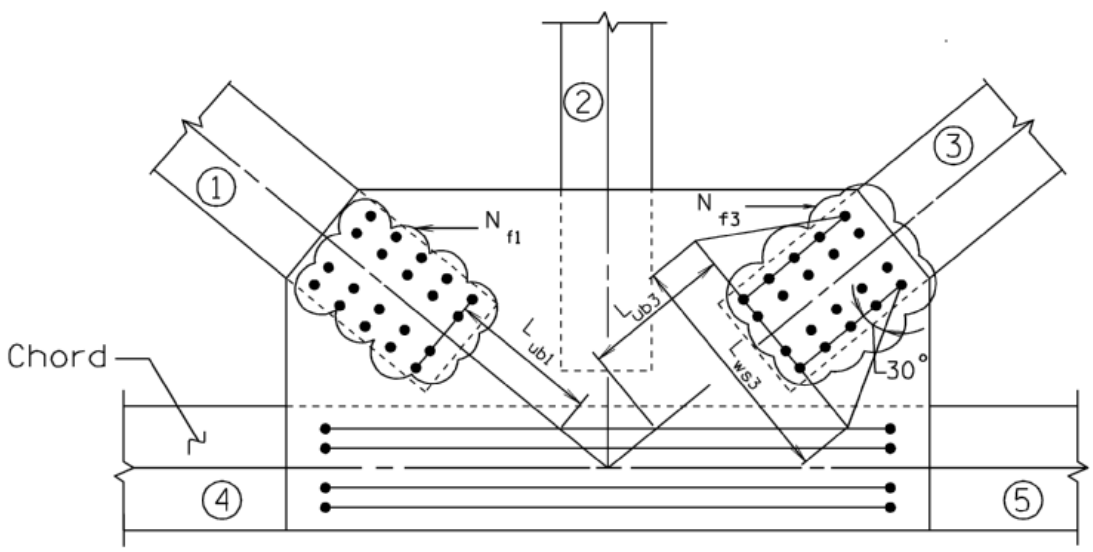

Analysis of Gusset Plate @ Vertical (Member 2): (TENSION CHECK)

Fastener Capacity:

Shear in fasteners:

Shear Area: $A_{shear} := N_{f2} \cdot A_{bolt}$ $A_{shear} = 7.95 \cdot in^2$

Shear Capacity: $C_{shear} := \sigma_{Design} \cdot A_{shear} \cdot N \cdot N_{shear2}$ $C_{shear} = 286 \cdot kip$

Bearing of fasteners (INTERIOR) (ALFD 10.56.1.3)**:** $j := 1..2$

$\phi R := \min\left[0.9 \cdot L_{c2} \cdot (g_t - C_2) \cdot F_U, 1.8 \cdot \phi_b \cdot (g_t - C_2) \cdot F_U\right]$ $\phi R = 40.5 \cdot kip$ (ALFD 10-166b)

Fastener Capacity: $C_{bearing} := (N_{f2} - N_{endf2}) \cdot \phi R$ $C_{bearing} = 648 \cdot kip$

Bearing of fasteners (END) (ALFD 10.56.1.3)**:**

$\phi R_{end} := \min\left[0.9 \cdot L_{ce2} \cdot (g_t - C_2) \cdot F_U, 1.8 \cdot \phi_b \cdot (g_t - C_2) \cdot F_U\right]$ $\phi R_{end} = 26.16 \cdot kip$ (ALFD 10-166b)

Fastener Capacity: $C_{endbearing} := N_{endf2} \cdot \phi R_{end}$ $C_{endbearing} = 52 \cdot kip$

Bearing of fasteners - Controlling $C_{controlling} := \min\left[C_{shear}, 2 \cdot (C_{bearing} + C_{endbearing})\right]$

$C_{controlling} = 286.28 \cdot kip$

Ratings (Tons)

$R_{Fastener2_j} := \dfrac{0.9C_{controlling} - DL_j \cdot |P_{2DL}|}{LL_j \cdot |P_{2LL}|} \cdot HS$

$R_{Fastener2} =$

	1
1	78.4
2	130.9

$\cdot Ton$

Rating Factors

$RF_{Fastener2_j} := \dfrac{0.9C_{controlling} - DL_j \cdot |P_{2DL}|}{LL_j \cdot |P_{2LL}|}$

$RF_{Fastener2} =$

	1
1	2.2
2	3.6

Block Shear Capacity:

$$A_{Shear} := \left[\left[L_{v12} - \left(N_{holesV12} - \frac{1}{2}\right)\cdot\left(\phi_b + \frac{1}{8}\cdot in\right)\right] + \left[L_{v22} - \left(N_{holesV22} - \frac{1}{2}\right)\cdot\left(\phi_b + \frac{1}{8}\cdot in\right)\right]\right]\cdot\left[\left(g_t - C_2\right)\cdot N\right]$$

$$A_{Shear} = 42.5\cdot in^2$$

$$A_{Tension} := \left[L_{t2} - \left(N_{holesT2} - 1\right)\cdot\left(\phi_b + \frac{1}{8}\cdot in\right)\right]\cdot\left[\left(g_t - C_2\right)\cdot N\right] \qquad A_{Tension} = 3.56\cdot in^2$$

Block Shear Capacity:

$$C := \begin{cases} 0.85\left[0.58\cdot F_y\cdot\left[\left(L_{v12} + L_{v22}\right)\cdot\left(g_t - C_2\right)\cdot N\right] + F_U\cdot A_{Tension}\right] & \text{if } \left(A_{Tension}\right) \ge 0.58\cdot A_{Shear} \\ 0.85\cdot\left[0.58\cdot F_U\cdot A_{Shear} + F_y\cdot\left[L_{t2}\cdot\left(g_t - C_2\right)\cdot N\right]\right] & \text{otherwise} \end{cases} \qquad C = 1370\cdot kip$$

Ratings (Tons)

$$R_{Ten.block2_j} := \text{if}\left[P_{2DL} > 0, \text{"NA"}, \frac{0.9C - DL_j\cdot\left|P_{2DL}\right|}{LL_j\cdot\left|P_{2LL}\right|}\cdot(HS)\right]$$

$R_{Ten.block2} =$

	1
1	421.6
2	703.7

$\cdot Ton$

Rating Factors

$$RF_{Ten.block2_j} := \text{if}\left(P_{2DL} > 0, \text{"NA"}, \frac{0.9C - DL_j\cdot\left|P_{2DL}\right|}{LL_j\cdot\left|P_{2LL}\right|}\right)$$

$RF_{Ten.block2} =$

	1
1	11.7
2	19.5

Tension Capacity of the Gusset plate (Whitmore Section):

$$A_e := \min\left[L_{ws2}\cdot\left(g_t - C_2\right), \left[L_{ws2} - \left(N_{holesT2}\right)\cdot\left(\phi_b + \frac{1}{8}\cdot in\right)\right]\cdot\left(g_t - C_2\right) + \beta\cdot\left[L_{ws2}\cdot\left(g_t - C_2\right)\right]\right]$$

$$A_e = 2.79\cdot in^2$$

Stress due to Dead Load: $\sigma_{DL} := \dfrac{P_{2DL}}{N\cdot A_e}$ $\qquad \sigma_{DL} = -4789\cdot psi$

Stress due to Live Load: $\sigma_{LL} := \dfrac{P_{2LL}}{N\cdot A_e}$ $\qquad \sigma_{LL} = -8452\cdot psi$

Ratings (Tons)

$$R_{Yielding2_j} := \text{if}\left[P_{2DL} > 0, \text{"NA"}, \frac{0.9F_y - DL_j \cdot |\sigma_{DL}|}{LL_j \cdot |\sigma_{LL}|} \cdot (HS)\right]$$

$R_{Yielding2} =$

	1
1	40.8
2	68.1

$\cdot Ton$

Rating Factors

$$RF_{Yielding2_j} := \text{if}\left(P_{2DL} > 0, \text{"NA"}, \frac{0.9F_y - DL_j \cdot |\sigma_{DL}|}{LL_j \cdot |\sigma_{LL}|}\right)$$

$RF_{Yielding2} =$

	1
1	1.1
2	1.9

$M2_C$ = "MEMBER IS IN TENSION, COMPRESSION CHECK IS NOT REQUIRED"

Analysis of Gusset Plate @ Vertical (Member 2): (COMPRESSION CHECK)

Note: See Tension Check for Fastener Capacity

Compression Capacity of the Gusset plate (Whitmore Section):

Stress due to Dead Load: $\sigma_{DL} := \dfrac{P_{2DL}}{N \cdot L_{ws2} \cdot (g_t - C_2)}$ $\quad \sigma_{DL} = -4193 \cdot psi$

Stress due to Live Load: $\sigma_{LL} := \dfrac{P_{2LL}}{N \cdot L_{ws2} \cdot (g_t - C_2)}$ $\quad \sigma_{LL} = -7399 \cdot psi$

Allowable compressive stresses (ALFD 10.54.1.1): FHWA Guidelines calculate the unbraced length as the average of three distances. Using the unbraced length along the line of action, as done here, should provide conservative ratings.

$L := L_{ub2}$ $\quad k = 1.20$ $\quad r := \sqrt{\left[\dfrac{(g_t - C_2)^2}{12}\right]}$ $\quad r = 0.14 \cdot in$

$c_c := \sqrt{\dfrac{2 \cdot (\pi)^2 \cdot E_s}{F_y}}$ $\quad c_c = 138.1$ $\quad \dfrac{k \cdot L}{r} = 76.9$

$$Fa_{Ld} := \begin{cases} 0.85 F_y \cdot \left[1 - \dfrac{\left(\dfrac{k \cdot L}{r}\right)^2 \cdot F_y}{4 \cdot (\pi)^2 \cdot E_s}\right] & \text{if } \dfrac{k \cdot L}{r} \le c_c \\ 0.85 \cdot \left[\dfrac{(\pi)^2 \cdot E_s}{\left(\dfrac{k \cdot L}{r}\right)^2}\right] & \text{otherwise} \end{cases}$$

$\boxed{Fa_{Ld} = 21548 \cdot psi}$

Ratings (Tons)

$$R_{Buckling2_j} := \text{if}\left[P_{2DL} < 0, \text{"NA"}, \frac{0.9 Fa_{Ld} - DL_j \cdot |\sigma_{DL}|}{LL_j \cdot |\sigma_{LL}|} \cdot (HS)\right]$$

$R_{Buckling2} =$

	1
1	"NA"
2	"NA"

$\cdot Ton$

Rating Factors

$$RF_{Buckling2_j} := \text{if}\left(P_{2DL} < 0, \text{"NA"}, \frac{0.9 Fa_{Ld} - DL_j \cdot |\sigma_{DL}|}{LL_j \cdot |\sigma_{LL}|}\right)$$

$RF_{Buckling2} =$

	1
1	"NA"
2	"NA"

$M2_T$ = "MEMBER IS IN TENSION, TENSION CHECK IS REQUIRED"

Analysis of Vertical Truss Member (Member 2):

Fastener Capacity:

Note: Shear in Fasteners is the same as in the Gusset Plate (See Gusset Plate Calcs)

Bearing of fasteners (INTERIOR) (ALFD 10.56.1.3)**:** $j := 1..2$

$$\phi R_{member} := \min\left[0.9 \cdot L_{c2} \cdot \left(m_{t2} - C_{m2}\right) \cdot F_{um2}, 1.8 \cdot \phi_b \cdot \left(m_{t2} - C_{m2}\right) \cdot F_{um2}\right]$$ (ALFDO 10-166b)

$$\phi R_{member} = 30.37 \cdot kip$$

Fastener Capacity: $C_{mbearing} := \left(N_{f2} - N_{endf2}\right) \cdot \phi R_{member}$ $C_{mbearing} = 486 \cdot kip$

Bearing of fasteners (END) (ALFD 10.56.1.3)**:**

$$\phi R_{memberend} := \min\left[0.9 \cdot L_{cem2} \cdot \left(m_{t2} - C_{m2}\right) \cdot F_{um2}, 1.8 \cdot \phi_b \cdot \left(m_{t2} - C_{m2}\right) \cdot F_{um2}\right]$$ (ALFD 10-166b)

$$\phi R_{memberend} = 19.62 \cdot kip$$

Fastener Capacity: $C_{mendbearing} := N_{endf2} \cdot \phi R_{memberend}$ $C_{mendbearing} = 39.244 \cdot kip$

Bearing of fasteners - Controlling $C_{mcontrolling} := \min\left[C_{shear}, 2 \cdot \left(C_{mbearing} + C_{mendbearing}\right)\right]$

$C_{mcontrolling} = 286.28 \cdot kip$

Ratings (Tons)

$$R_{mFastener2_j} := \frac{0.9C_{mcontrolling} - DL_j \cdot \left|P_{2DL}\right|}{LL_j \cdot \left|P_{2LL}\right|} \cdot HS$$

$R_{mFastener2} =$

	1
1	78.4
2	130.9

$\cdot Ton$

Rating Factors

$$RF_{mFastener2_j} := \frac{0.9C_{mcontrolling} - DL_j \cdot \left|P_{2DL}\right|}{LL_j \cdot \left|P_{2LL}\right|}$$

$RF_{mFastener2} =$

	1
1	2.2
2	3.6

Block Shear Capacity:

$$A_{mShear} := \left[\left[L_{vm12} - \left(N_{holesV12} - \frac{1}{2}\right)\cdot\left(\phi_b + \frac{1}{8}\cdot in\right)\right] + \left[L_{vm22} - \left(N_{holesV22} - \frac{1}{2}\right)\cdot\left(\phi_b + \frac{1}{8}\cdot in\right)\right]\right]\cdot\left[\left(m_{t2} - C_{m2}\right)\cdot N\right]$$

$$A_{mShear} = 31.88\cdot in^2$$

$$A_{mTension} := \left[L_{tm2} - \left(N_{holesT2} - 1\right)\cdot\left(\phi_b + \frac{1}{8}\cdot in\right)\right]\cdot\left[\left(m_{t2} - C_{m2}\right)\cdot N\right] \qquad A_{mTension} = 1.2\cdot in^2$$

Block Shear Capacity:

$$C_{BlockShear} := \begin{cases} 0.85\left[0.58\cdot F_{ym2}\cdot\left[\left(L_{vm12} + L_{vm22}\right)\cdot\left(m_{t2} - C_{m2}\right)\cdot N\right] + F_{um2}\cdot A_{mTension}\right] & \text{if } \left(A_{mTension}\right) \geq 0.58\cdot A_{mShea} \\ 0.85\cdot\left[0.58\cdot F_{um2}\cdot A_{mShear} + F_{ym2}\cdot\left[L_{tm2}\cdot\left(m_{t2} - C_{m2}\right)\cdot N\right]\right] & \text{otherwise} \end{cases}$$

$$C_{BlockShear} = 990\cdot kip$$

$$C_{Fracture} := F_{um2}\cdot A_{net2} \qquad C_{Fracture} = 415.8\cdot kip$$

$$C_m := \min\left(C_{BlockShear}, C_{Fracture}\right) \qquad C_m = 415.8\cdot kip$$

Ratings (Tons)

$$R_{mTen.block2_j} := \text{if}\left[P_{2DL} > 0, \text{"NA"}, \frac{0.9C_m - DL_j\cdot\left|P_{2DL}\right|}{LL_j\cdot\left|P_{2LL}\right|}\cdot(HS)\right] \qquad R_{mTen.block2} =$$

	1
1	119.4
2	199.3

$\cdot Ton$

Rating Factors

$$RF_{mTen.block2_j} := \text{if}\left(P_{2DL} > 0, \text{"NA"}, \frac{0.9C_m - DL_j\cdot\left|P_{2DL}\right|}{LL_j\cdot\left|P_{2LL}\right|}\right) \qquad RF_{mTen.block2} =$$

	1
1	3.3
2	5.5

$P_{4DL} := P4_{DL}$ $\quad P_{4LL} := m \cdot DF \cdot (1 + IM) \cdot P4_{LL}$

$P_{4DL} = -83.17 \cdot kip$ $\quad P_{4LL} = -92.07 \cdot kip$

$M4_T$ = "MEMBER IS IN TENSION, TENSION CHECK IS REQUIRED"

Analysis of Left Chord Truss Member (Member 4):

Block Shear Capacity:

$C_{Fracture} := F_{um4} \cdot A_{net4}$ $\quad C_{Fracture} = 425.4 \cdot kip$

Ratings (Tons)

$$R_{mTen.block4_j} := \text{if}\left(P_{4DL} > 0, \text{"NA"}, \min\left(\frac{0.9C_{Fracture} - DL_j \cdot |P_{4DL}|}{LL_j \cdot |P_{4LL}|} \cdot HS\right)\right)$$

$R_{mTen.block4} =$

	1
1	49.5
2	82.6

$\cdot Ton$

Rating Factors

$$RF_{mTen.block4_j} := \text{if}\left(P_{4DL} > 0, \text{"NA"}, \min\left(\frac{0.9C_{Fracture} - DL_j \cdot |P_{4DL}|}{LL_j \cdot |P_{4LL}|}\right)\right)$$

$RF_{mTen.block4} =$

	1
1	1.4
2	2.3

$P_{5DL} := P5_{DL}$ $P_{5LL} := m \cdot DF \cdot (1 + IM) \cdot P5_{LL}$

$P_{5DL} = -83.17 \cdot kip$ $P_{5LL} = -92.07 \cdot kip$

$M5_T$ = "MEMBER IS IN TENSION, TENSION CHECK IS REQUIRED"

Analysis of Left Chord Truss Member (Member 5):

Block Shear Capacity:

$C_{Fracture} := F_{um5} \cdot A_{net5}$ $C_{Fracture} = 425.4 \cdot kip$

Ratings (Tons)

$$R_{mTen.block5_j} := \text{if}\left(P_{5DL} > 0, \text{"NA"}, \min\left(\frac{0.9C_{Fracture} - DL_j \cdot |P_{5DL}|}{LL_j \cdot |P_{5LL}|} \cdot HS\right)\right)$$

$R_{mTen.block5} =$

	1
1	49.5
2	82.6

$\cdot Ton$

Rating Factors

$$RF_{mTen.block5_j} := \text{if}\left(P_{5DL} > 0, \text{"NA"}, \min\left(\frac{0.9C_{Fracture} - DL_j \cdot |P_{5DL}|}{LL_j \cdot |P_{5LL}|}\right)\right)$$

$RF_{mTen.block5} =$

	1
1	1.4
2	2.3

Gusset Plate Rating Summary

Vertical - Member 2 - Rating:

Block Shear

$R_{Ten.block2}$ =

	1
1	421.57
2	703.70

·Ton

$RF_{Ten.block2}$ =

	1
1	11.71
2	19.55

Gross Section Yielding

$R_{Yielding2}$ =

	1
1	40.78
2	68.07

·Ton

$RF_{Yielding2}$ =

	1
1	1.13
2	1.89

Buckling

$R_{Buckling2}$ =

	1
1	"NA"
2	"NA"

·Ton

$RF_{Buckling2}$ =

	1
1	"NA"
2	"NA"

Fastener Capacity

$R_{Fastener2}$ =

	1
1	78.40
2	130.86

·Ton

$RF_{Fastener2}$ =

	1
1	2.18
2	3.63

Truss Member Rating Summary

Vertical - Member 2 - Tension or Compression Rating:

$R_{mFastener2}$ =

	1
1	78.4
2	130.9

·Ton

$R_{mTen.block2}$ =

	1
1	119.4
2	199.3

·Ton

$RF_{mFastener2}$ =

	1
1	2.2
2	3.6

$RF_{mTen.block2}$ =

	1
1	3.3
2	5.5

Truss Member Rating Summary (continued)

Left Chord - Member 4 - Tension or Compression Rating:

$R_{mTen.block4} =$

	1
1	49.5
2	82.6

$\cdot Ton$

$RF_{mTen.block4} =$

	1
1	1.4
2	2.3

Right Chord - Member 5 - Tension or Compression Rating:

$R_{mTen.block5} =$

	1
1	49.5
2	82.6

$\cdot Ton$

$RF_{mTen.block5} =$

	1
1	1.4
2	2.3

Controlling Gusset Plate Rating Summary

Gusset Plate Controlling Rating:

Case		
1 -Inventory	$Conn_{Inv} = 40.78 \cdot Ton$	$Conn_{Opr} = 68.07 \cdot Ton$
2 -Operating	$Conn_{InvF} = 1.13$	$Conn_{OprF} = 1.89$

$InvControl_{Gusset}$ = "Member 2 Controls the Inventory Rating"

$OprControl_{Gusset}$ = "Member 2 Controls the Operating Rating"

$InvRFControl_{Gusset}$ = "Member 2 Controls the Inventory Rating Factor"

$OprRFControl_{Gusset}$ = "Member 2 Controls the Operating Rating Factor"

Truss Member Controlling Rating:

Case		
1 -Inventory	$Conn_{mInv} = 49.5 \cdot Ton$	$Conn_{mOpr} = 82.63 \cdot Ton$
2 -Operating	$Conn_{mInvF} = 1.38$	$Conn_{mOprF} = 2.3$

$InvControl_{TrussMember}$ = "Truss Member 4 Controls the Inventory Rating"

$OprControl_{TrussMember}$ = "Truss Member 4 Controls the Operating Rating"

$InvRFControl_{TrussMember}$ = "Truss Member 4 Controls the Inventory Rating Factor"

$OprRFControl_{TrussMember}$ = "Trus Member 4 Controls the Operating Rating Factor"

Operating Rating results shall be greater than $HS = 36 \cdot Ton$
otherwise structure requires posting according to VDOT guidelines

ENSION, TENSION CHECK IS REQUIRED")