VDOT
Virginia Department of Transportation

NEW KENT SAFETY REST AREA & INFORMATION CENTER

PROJECT CODE: 501-06501-005

DJG INC.

ENGINEERS - ARCHITECTS - PLANNERS
WILLIAMSBURG, VIRGINIA

IFB 743-RD

ENGINEERS • ARCHITECTS • PLANNERS
DJG INC.
449 McLaws Circle, Williamsburg, VA 23185
Phone: 757.253.0673 Fax: 757.253.2319
Norfolk-Virginia Beach: 757.874.5015
www.djginc.com
COMMITTED TO EXCELLENCE

COMMONWEALTH OF VIRGINIA
MATTHEW BURHAM BURTON
No. 011104
8-3-06
ARCHITECT

THIS DOCUMENT CONTAINS INFORMATION PROPRIETARY TO DJG, INC. AND IS FURNISHED IN CONFIDENCE AN AN INSTRUMENT OF SERVICE FOR THE LIMITED PURPOSE OF EVALUATION, BIDDING AND REVIEW, OR CONSTRUCTION OF A SPECIFIC PROJECT. REPRODUCTION OF THIS DOCUMENT, IN WHOLE OR IN PART, OR THE MODIFICATION OF ANY DETAIL OR DESIGN WITHOUT THE EXPRESSED WRITTEN CONSENT OF DJG, INC. IS PROHIBITED. ALL RIGHTS RESERVED. COPYRIGHT (C) 2006.

REVISIONS

NO.	DATE	DESCRIPTION

COVER SHEET

VIRGINIA DEPARTMENT OF TRANSPORTATION
NEW KENT SAFETY REST AREA
AND INFORMATION CENTER
NEW KENT COUNTY, VIRGINIA

SCALE NONE
DESIGNED MGB
DRAWN MGB
CHECKED MGB
DATE 8/3/06

COMMISSION NUMBER
2070030

SHEET NUMBER
TS1

ABBREVIATIONS

AB	ANCHOR BOLT
AD	AREA DRAIN
ADJ	ADJACENT, ADJUSTABLE
AFF	ABOVE FINISHED FLOOR
AFG	ABOVE FINISHED GRADE
AP	ACCESS PANEL
BD	BOARD
BEL	BELOW
BET	BETWEEN
BFG	BELOW FINISHED GRADE
BIT	BITUMINOUS
BLDG	BUILDING
BLKG	BLOCKING
BOT	BOTTOM
BRG	BEARING
BS	BOTH SIDES
BSMT	BASEMENT
BUR	BUILT-UP ROOFING
BW	BOTH WAYS
CAB	CABINET
CER	CERAMIC
CF	CUBIC FOOT
CFCI	CONTRACTOR-FURNISHED, CONTRACTOR-INSTALLED
CG	CORNER GUARD
CJ	CEILING JOIST, CONTROL JOINT
CLG	CEILING
CLR	CLEAR(ANCE)
CMU	CONCRETE MASONRY UNIT
CO	CLEANOUT
COL	COLUMN
CONC	CONCRETE
CONT	CONTINUOUS, CONTINUE
CRS	COURSE(S)
CSMT	CASEMENT
CY	CUBIC YARD
DEMO	DEMOLISH, DEMOLITION
DF	DRINKING FOUNTAIN
DH	DOUBLE HUNG
DI	DROP INLET
DIA	DIAMETER
DIAG	DIAGONAL
DIM	DIMENSION
DIP	DUCTILE IRON PIPE
DL	DEAD LOAD
DS	DOWNSPOUT
DWG	DRAWING
DWR	DRAWER
(E)	EXISTING
EJ	EXPANSION JOINT
EL	ELEVATION
ELEC	ELECTRIC(AL)
ELEV	ELEVATOR
EPB	ELECTRICAL PANELBOARD
EQ	EQUAL
EQPT	EQUIPMENT
EWC	ELECTRIC WATER COOLER
EXP	EXPOSED
EXT	EXTERIOR
FA	FIRE ALARM
FBO	FURNISHED BY OTHERS
FD	FLOOR DRAIN
FE	FIRE EXTINGUISHER
FEC	FIRE EXTINGUISHER CABINET
FHC	FIRE HOSE CABINET
FHMS	FLAT-HEAD MACHINE SCREW
FHWS	FLAT-HEAD WOOD SCREW
FIN	FINISH(ED)
FJ	FLOOR JOIST, FINGER-JOINT
FLR	FLOOR
FNDN	FOUNDATION
FOC	FACE OF CONCRETE
FOF	FACE OF FINISH
FOM	FACE OF MASONRY
FOS	FACE OF STUD
FRT	FIRE-RETARDANT TREATED
FS	FLOOR SINK
FTG	FOOTING
GA	GAUGE
GALV	GALVANIZED
GC	GENERAL CONTRACTOR
GL	GLASS, GLAZING
GR	GRADE
GSF	GROSS SQUARE FEET
GWB	GYPSUM WALL BOARD
GYP	GYPSUM
H	HEIGHT
HB	HOSE BIBB
HC	HANDICAPPED, HOLLOW CORE
HDR	HEADER
HM	HOLLOW METAL
HOR	HORIZONTAL
HP	HIGH POINT

HWH	HOT WATER HEATER
HYD	HYDRANT
ID	INSIDE DIAMETER
INCL	INCLUDE
INSUL	INSULATION
INT	INTERIOR, INTERMEDIATE INTERSECTION
INV	INVERT
IP	INLET PROTECTION
ISO	ISOMETRIC
JT	JOINT
KIT	KITCHEN
KO	KNOCKOUT
L	LENGTH
LAV	LAVATORY
LL	LIVE LOAD
LLV	LONG LEG VERTICAL
LT	LIGHT
MAS	MASONRY
MAX	MAXIMUM
MCJ	MASONRY CONTROL JOINT
MECH	MECHANICAL
MET	METAL
MFR	MANUFACTURER
MDF	MEDIUM-DENSITY FIBERBOARD
MDO	MEDIUM-DENSITY OVERLAY
MH	MANHOLE
MIN	MINIMUM
MO	MASONRY OPENING
MT	MOUNT
MTL	MATERIAL
(N)	NEW
NC	NO CEILING
NIC	NOT IN CONTRACT
NTS	NOT TO SCALE
OC	ON CENTER
OD	OUTSIDE DIAMETER OVERFLOW ROOF DRAIN
OFCI	OWNER-FURNISHED, CONTRACTOR-INSTALLED
OFOI	OWNER-FURNISHED, OWNER-INSTALLED
OH	OVERHEAD
OPP	OPPOSITE (HAND)
OSB	ORIENTED STRAND BOARD
PEJ	PERIMETER EXPANSION JOINT
PL	PROPERTY LINE
P-LAM	PLASTIC LAMINATE
PLF	POUNDS PER LINEAR FOOT
PSF	POUNDS PER SQUARE FOOT
PSI	POUNDS PER SQUARE INCH
PT	POINT, PRESSURE PRESERVATIVE TREATMENT
PVC	POLYVINYL CHLORIDE
R	RISER
RA	RETURN AIR
RCP	REINFORCED CONCRETE PIPE
RD	ROOF DRAIN, ROAD
REQ'D	REQUIRED
RM	ROOM
RO	ROUGH OPENING
ROW	RIGHT OF WAY
RWL	RAINWATER LEADER
S/S	STAINLESS STEEL
SAN	SANITARY SEWER
SC	SOLID CORE
SD	STORM DRAIN
SF	SQUARE FOOT
SH	SHELF, SHELVING
SHT	SHEET
SIM	SIMILAR
SMS	SHEET METAL SCREW
SQ	SQUARE
STD	STANDARD
STL	STEEL
STR	STRUCTURAL
T	TREAD
TC	TOP OF CURB
TOF	TOP OF FOOTING
TOW	TOP OF WALL
TYP	TYPICAL
U	URINAL
UON	UNLESS OTHERWISE NOTED
VB	VAPOR BARRIER
VDOT	VIRGINIA DEPARTMENT OF TRANSPORTATION
VERT	VERTICAL
W	WIDE, WIDTH
W/	WITH
W/O	WITHOUT
WC	WATER CLOSET
WD	WOOD
WL	WATER LINE
WM	WATER METER
WO	WHERE OCCURS
WWF	WELDED WIRE FABRIC

SYMBOLS

SHEET NUMBER WHERE REFERENCED ITEM IS TAKEN — DRAWING OR DETAIL NUMBER (X / XX|XX) — SHEET NUMBER WHERE REFERENCED ITEM IS DRAWN

100 — ROOM NUMBER

(100) — DOOR MARK

(A) — WINDOW MARK

1 — SHEET KEY NOTE

1 — WALL TYPE

SECTION MARK (SEE ITEM ABOVE)

DIRECTION OF VIEW

ELEVATION MARK

C	CHANNEL
℄	CENTERLINE
d	PENNY
L	ANGLE
⅊	PLATE
ø	ROUND, DIAMETER

EARTH

CMU

CONCRETE

GROUT

GYPSUM BOARD

BRICK

WOOD IN ROUGH (CONTINUOUS)

WOOD IN ROUGH (BLOCKING)

PLYWOOD

INSULATION

RIGID INSULATION

PROJECT SUMMARY

THE PROJECT IS LOCATED ON WESTBOUND INTERSTATE 64 IN NEW KENT COUNTY AT MILE MARKER 213. THE WORK INCLUDES SITE REHABILITATION, DEMOLITION OF EXISTING REST AREA STRUCTURES, AND CONSTRUCTION OF A NEW SAFETY REST AREA AND INFORMATION CENTER ON THE EXISTING SITE. EXISTING CAR AND TRUCK PARKING IS TO REMAIN AND A NEW STORMWATER MANAGEMENT SYSTEM IS TO BE PROVIDED FOR THE ENTIRE SITE. WORK SCOPE INCLUDES ARCHITECTURAL, CIVIL, STRUCTURAL, PLUMBING, MECHANICAL, ELECTRICAL, AND FIRE PROTECTION, AND LANDSCAPE ARCHITECTURE WORK.

MAIN REST AREA & INFORMATION CENTER BUILDING

OCCUPANCY GROUP(S):	NON-SEPARATED MIXED USE: A-3 WITH S-1 & B
TYPE OF CONSTRUCTION:	V-B (COMBUSTIBLE, UNPROTECTED)
TOTAL BUILDING AREA:	9,058 G.S.F.
BUILDING VOLUME:	281,027 C.F. TOTAL BUILDING ENVELOPE
DESIGN FLOOR LIVE LOAD:	100 PSF

MAINTENANCE BUILDING

OCCUPANCY GROUP:	S-1
TYPE OF CONSTRUCTION:	V-B (COMBUSTIBLE, UNPROTECTED)
TOTAL BUILDING AREA:	316 GSF
BUILDING VOLUME:	3,276 C.F. TOTAL BUILDING ENVELOPE
DESIGN FLOOR LIVE LOAD:	100 P.S.F.

PARKING SUMMARY

STANDARD SPACES:	87
HANDICAPPED SPACES:	6 (INCLUDES 1 VAN ACCESSIBLE)
TRUCK/BUS SPACES:	29
TOTAL PARKING:	122

APPLICABLE BUILDING CODES AND REGULATIONS

ALL NEW WORK SHALL COMPLY WITH ALL APPLICABLE LAWS AND BUILDING CODES GOVERNING THIS PROJECT. SUCH COMPLIANCE WILL INCLUDE, BUT NOT BE LIMITED TO THE FOLLOWING:

VIRGINIA UNIFORM STATEWIDE BUILDING CODE (2003 EDITION)
VIRGINIA STATE ACCESSIBILITY STANDARD (ADAAG 2004)

THE CONTRACTOR SHALL MAINTAIN A COPY OF THE FOLLOWING DOCUMENTS AT THE PROJECT SITE:
VIRGINIA UNIFORM STATEWIDE BUILDING CODE: 2003 EDITION
VIRGINIA STATE FIRE PREVENTION CODE: 2003 EDITION
NFPA 241 (1996 EDITION)

SHEET INDEX

TS1 COVER SHEET
TS2 SHEET INDEX, ABBREVIATONS, & SYMBOLS

CIVIL

C1 SURVEY DATA & LAYOUT PLAN
C2 SITE PLAN
C3 ENLARGED SITE PLAN
C4 E&S CONTROL, GRADING & STORM DRAIN PLAN
C5 ROOF DRAIN & CISTERN PLAN W/DETAILS
C6 UTILITY PLAN
C7 SIGNAGE & PAVEMENT MARKING PLAN #1
C8 SIGNAGE & PAVEMENT MARKING PLAN #2
C9 CONSTRUCTION DETAILS #1
C10 CONSTRUCTION DETAILS #2
C11 EROSION & SEDIMENT CONTROL NOTES AND DETAILS
C12 BIO-RETENTION & STORM DRAIN DETAILS
C13 ENLARGED GEOTHERMAL SITE PLAN
C14 UTILITY DETAILS
C15 UTILITY NOTES & DETAILS
C16 CAR BASELINE PROFILE
C17 TRUCK BASELINE PROFILE
C18 STORM SYSTEM PROFILE #1
C19 STORM SYSTEM PROFILE #2
C20 WATER & SANITARY SEWER PROFILE

LANDSCAPE

L1 LANDSCAPE PLAN
L2 ENLARGED LANDSCAPE PLAN
L3 LANDSCAPE NOTES & DETAILS

DEMOLITION

D1 DEMOLITION PLAN & NOTES

ARCHITECTURAL

A1 FLOOR PLAN
A2 REFLECTED CEILING PLAN
A3 ROOF PLAN AND DETAILS
A4 EXTERIOR ELEVATIONS
A5 EXTERIOR ELEVATIONS
A6 BUILDING SECTIONS
A7 WALL SECTIONS
A8 DOOR SCHEDULE AND DETAILS
A9 DOOR AND WINDOW DETAILS
A10 FINISH SCHEDULE AND DETAILS
A11 INTERIOR ELEVATIONS
A12 INTERIOR ELEVATIONS

STRUCTURAL

S1 FOUNDATION PLAN, NOTES AND FOOTING SCHEDULE
S2 ROOF FRAMING PLAN, SECTIONS AND DETAILS
S3 BUILDING SECTIONS AND DETAILS
S4 TRUSSES AND FRAMING DETAILS
S5 STRUCTURAL DETAILS
S6 CISTERN PLAN, DETAILS, AND PLUMBING

FIRE PROTECTION

FP1 FIRE PROTECTION PLAN

PLUMBING

P1 GENERAL NOTES, LEGEND
P2 SUPPLY PIPING PLAN & SUPPLY RISER DIAGRAM
P3 SANITARY PIPING FLOOR PLANS
P4 SANITARY ISO. DIAGRAM & FIXTURE SCHEDULE
P5 RAIN WATER HARVEST SYSTEM LAYOUT AND DETAILS

MECHANICAL

M1 GENERAL NOTES AND LEGEND
M2 MECHANICAL SCHEDULES
M3 MECHANICAL DUCTWORK FLOOR AND ATTIC PLANS
M4 MECHANICAL PIPING PARTIAL FLOOR PLAN
M5 MECHANICAL DETAILS AND CONTROL DIAGRAMS
M6 MECHANICAL CONTROL AND FLOW DIAGRAMS

ELECTRICAL

E1 ELECTRICAL LEGEND AND RISER DIAGRAM
E2 ELECTRICAL SITE PLAN
E3 ELECTRICAL LIGHTING PLAN
E4 ELECTRICAL POWER PLAN
E5 ELECTRICAL POWER PART PLANS
E6 ELECTRICAL SIGNAL PLAN
E7 ELECTRICAL DETAILS AND PANELBOARD SCHEDULES

VICINITY MAP

PROJECT LOCATION
I-64W MILEPOST 213
NEW KENT COUNTY, VA

NORTH

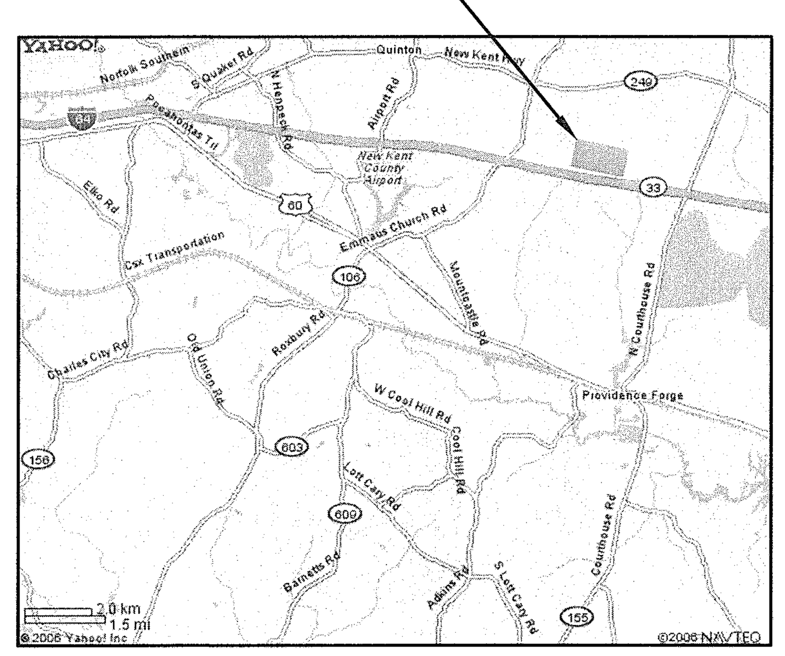

CONTACTS

VIRGINIA DEPARTMENT OF TRANSPORTATION
1401 EAST BROAD STREET
RICHMOND, VA 23219

JACOB A. PORTER
SPECIAL FACILITIES PROGRAM MANAGER
(804) 662-9615 – FAX: (804) 662-9407

DJG, INC.
449 MC LAWS CIRCLE
WILLIAMSBURG, VA 23185

MATTHEW G. BURTON, AIA
PROJECT MANAGER
(757) 253-0673 – FAX: 253-2319
mburton@djginc.com

ENGINEERS • ARCHITECTS • PLANNERS
DJG INC.
449 McLaws Circle, Williamsburg, VA 23185
Phone: 757.253.0673 Fax: 757.253.2319
Norfolk-Virginia Beach: 757.874.5015
www.djginc.com
COMMITTED TO EXCELLENCE

COMMONWEALTH OF VIRGINIA
MATTHEW GORHAM BURTON
No. 011104
6-3-06
ARCHITECT

THIS DOCUMENT CONTAINS INFORMATION PROPRIETARY TO DJG, INC. AND IS FURNISHED IN CONFIDENCE AN AN INSTRUMENT OF SERVICE FOR THE LIMITED PURPOSE OF EVALUATION, BIDDING AND REVIEW, OR CONSTRUCTION OF A SPECIFIC PROJECT. REPRODUCTION OF THIS DOCUMENT, IN WHOLE OR IN PART, OR THE MODIFICATION OF ANY DETAIL OR DESIGN WITHOUT THE EXPRESSED, WRITTEN CONSENT OF DJG, INC. IS PROHIBITED. ALL RIGHTS RESERVED. COPYRIGHT (C) 2006.

NO.	DATE	DESCRIPTION

REVISIONS

SHEET INDEX, ABBREVIATONS, & SYMBOLS

VIRGINIA DEPARTMENT OF TRANSPORTATION
NEW KENT SAFETY REST AREA AND INFORMATION CENTER
NEW KENT COUNTY, VIRGINIA

SCALE	DESIGNED	DRAWN	CHECKED	DATE
NONE	MGB	LJD	MGB	8/3/06

COMMISSION NUMBER
2070030

SHEET NUMBER
TS2

TRUCK BASELINE CURVE DATA

CURVE "A"
DELTA=26°18'14"
DEGREE OF CURVE= 06°
TANGENT=223.13'
LENGTH=438.40'
RADIUS =954.95'
PC 10+00.00
PI 12+23.13
PT 14+38.40

CURVE "B"
DELTA=26°18'14"
DEGREE OF CURVE= 13.32460°
TANGENT=100.48'
LENGTH=197.41'
RADIUS =430.00'
PC 19+75.55, 5'RT.
PI 20+76.05
PT 21+72.96, 5'RT.

CURVE "C"
DELTA=32°19'04"
DEGREE OF CURVE= 12.44°
TANGENT=130.04'
LENGTH=253.82'
RADIUS =450.00'
PC 25+83.61, 5'RT.
PI 27+13.65
PT 28+37.43, 5'RT.

CURVE "D"
DELTA=35°49'18"
DEGREE OF CURVE= 87.47°
TANGENT=20.93'
LENGTH=40.51'
RADIUS=65.27'
PCC 28+37.43, 5'RT.
PI 28+58.36
PT 28+77.94, 5'RT.

CURVE "E"
DELTA=34°54'14"
DEGREE OF CURVE= 52.05°
TANGENT=34.58'
LENGTH=67.01'
RADIUS =110.00'
PC 29+61.57
PI 29+96.15
PT 30+28.58

CURVE "F"
DELTA=33°14'08"
DEGREE OF CURVE= 09°
TANGENT=190.00'
LENGTH=639.28'
RADIUS =634.62'
PC 31+16.69
PI 33+06.69
PT 34+85.97

CAR BASELINE CURVE DATA

CURVE "AA"
DELTA=21°45'10"
DEGREE OF CURVE=
06°TANGENT=183.49'
LENGTH=362.56'
RADIUS =954.98'
PC 10+00.00
PI 11+83.49
PT 13+62.56

CURVE "BB"
DELTA=23°51'30"
DEGREE OF CURVE= 06°
TANGENT=201.74'
ARC=397.64'
RADIUS =954.98'
PC 27+78.51
PI 29+80.25
PT 26+76.18

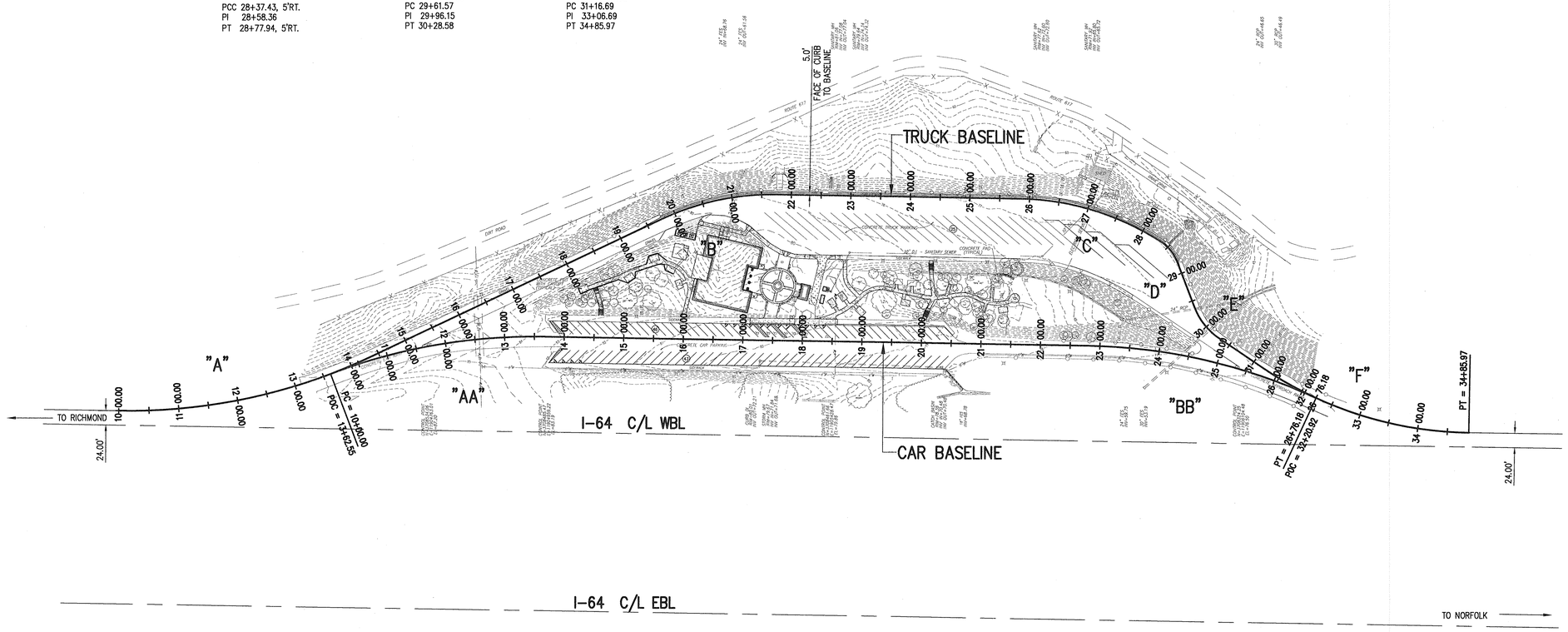

NORTH

SURVEY DATA AND LAYOUT SHEET

SCALE: 1'-50"

ENGINEERS • ARCHITECTS • PLANNERS
DJG, INC.
449 McLaws Circle, Williamsburg, VA 23185
Phone: 757.253.0673 Fax: 757.253.2319
Norfolk-Virginia Beach: 757.874.5015
www.djginc.com
COMMITTED TO EXCELLENCE

COMMONWEALTH OF VIRGINIA
DANIEL J. DE YOUNG
No.3517
8-3-06
PROFESSIONAL ENGINEER

THIS DOCUMENT CONTAINS INFORMATION PROPRIETARY TO DJG, INC. AND IS FURNISHED IN CONFIDENCE. ACCEPTANCE OF DELIVERY OR POSSESSION OF DJG, INC. DOCUMENTS CONSTITUTES A COVENANT RESPECTING THE PATENTS, COPYRIGHTS, AND PROPRIETARY INTERESTS OF DJG, INC. AND IS FURNISHED IN ITS ENTIRETY AND AS A WHOLE ONLY FOR THE LIMITED PURPOSE OF EVALUATION, BIDDING AND REVIEW, OR AS INSTRUMENTS OF SERVICE FOR THE LIMITED PURPOSES OF DJG, INC. IN WHOLE OR IN PART OR THE MODIFICATION OF ANY DETAIL OR DESIGN WITHOUT THE EXPRESSED, WRITTEN CONSENT OF DJG, INC. IS PROHIBITED. COPYRIGHT © DJG, INC. 2006

REVISIONS		
△	DATE	DESCRIPTION

SURVEY DATA & LAYOUT PLAN

VIRGINIA DEPARTMENT OF TRANSPORTATION
NEW KENT SAFETY REST AREA AND INFORMATION CENTER
NEW KENT COUNTY, VIRGINIA

SCALE	DESIGNED	DRAWN	CHECKED	DATE
AS NOTED	BMB	BMB	KMS	8/3/06

COMMISSION NUMBER
2070030

SHEET NUMBER
C1

LEGEND

EXISTING:

- (E) = EXISTING
- P = ELECTRIC BOX
- = WATER VALVE
- = FIRE HYDRANT
- = LIGHT POLE (L.P.)
- = POWER POLE
- = GUY WIRE
- = BOLLARD
- = SIGN
- W = UNDERGROUND WATER LINE
- GAS = UNDERGROUND GAS LINE
- TEL = UNDERGROUND TELEPHONE LINE
- OHE = OVERHEAD POWER/CATV LINE(S)
- OHT = OVERHEAD TELEPHONE LINE(S)
- = FENCE
- 18"RCP = CENTERLINE OF DITCH
- = STORMWATER PIPES
- R/W = RIGHT-OF-WAY
- 280 = CONTOURS (FEET)
- = EXISTING TREE
- = TREELINE
- 12"W = EXISTING WATERLINE
- 8"PVC = EXISTING SANITARY SEWER LINE

PROPOSED:

- TYP. = TYPICAL
- R = RADIUS
- = HANDICAP ACCESSIBLE SPACE
- = SITE LIGHT
- = SPOT LIGHT
- = BOLLARD
- = CONCRETE
- = ASPHALT PAVEMENT
- = HEAVY DUTY CONCRETE PAVEMENT
- 04B12 = SOIL BORING LOCATION (SEE PROJECT MANUAL FOR GEOTECHNICAL REPORT)

SITE TABULATION

TOTAL SITE AREA (FROM GORE TO GORE): APPROX. 636,412 SF (14.61 AC)

EXISTING SITE IMPERVIOUSNESS: 141,134 SF (3.24 AC)

EXISTING SITE OPEN AREA: 495,278 SF. (11.37 AC.) – 78%

DISTURBED AREA: APPROX. 4 AC.

NET INCREASE OF SITE IMPERVIOUS AREA: 10,454 SF (0.24 AC) 7.4%

NEW TOTAL SITE IMPERVIOUS AREA: 151,589 SF (3.48 AC)

NEW TOTAL SITE OPEN AREA: 484,823 SF (11.13 AC) – 76%

PARKING REQUIREMENTS

PROPOSED/REQUIRED HANDICAP, CAR AND TRUCK PARKING SPACES

CAR PARKING

REQUIRED NUMBER OF SPACES FOR 20 YEAR PROJECTION = 67 SPACES
PROVIDED NUMBER OF SPACES = 93 SPACES

PER ADA STANDARDS, FOR 101–150 STANDARD CAR PARKING SPACES, A MINIMUM OF 5 HANDICAP SPACES ARE REQUIRED. 1 VAN ACESSIBLE SPACE PER 6 HANDICAP SPACES ARE REQUIRED.
PROVIDED NUMBER OF SPACES = 5 STANDARD HANDICAP SPACES
1 VAN ACCESSIBLE SPACE

1 STATE TROOPER PARKING SPACE REQUIRED/PROVIDED

5% OF CAR PARKING CAN BE DESIGNATED FOR HYBRID VEHICLES = 5 SPACES ARE PROVIDED

4 CAR PARKING SPACES ARE RESERVED FOR EMPLOYEES

TRUCK PARKING

REQUIRED NUMBER OF SPACES FOR 20 YEAR PROJECTION = 27 SPACES
PROVIDED NUMBER OF SPACES = 29 SPACES

GENERAL NOTES

1. THE TOPOGRAPHIC SURVEY SHOWN IS BASED ON A CURRENT FIELD SURVEY BY LANDTECH RESOURCES, INC, LOCATED AT 107 THOMAS NELSON LN. WILLIAMSBURG, Va 23185–2736, IN JUNE 2006. CONTOUR INTERVAL IS 1'. THIS SURVEY WAS PREPARED WITHOUT THE BENEFIT OF A TITLE REPORT AND DOES NOT NECESSARILY SHOW ALL EASEMENTS, SERVITUDES AND COVENANTS OF RECORD.
2. THE PROPERTY SHOWN IS LOCATED NEAR MILEPOST 213, WESTBOUND ON INTERSTATE I–64 IN NEW KENT COUNTY, VIRGINIA.
3. REST STOP RIGHT OF WAY AREA IS APPOXIMATELY 14.61 ACRES FROM GORE TO GORE.
4. UNDERGROUND UTILITIES SHOWN ARE FROM MARKINGS BY "MISS UTILITY" TICKETS IN JUNE 2006. VISIBLE UTILITIES SHOWN HEREON ARE FROM FIELD LOCATION BY LANDTECH RESOURCES, INC. CONTRACTOR MUST FIELD VERIFY ALL UTILITIES.
5. SANITARY AND STORM SEWER PIPE SIZES ARE FROM RECORD INFORMATION, INVERTS ARE FIELD MEASURED.
6. WATERLINE SIZE AND LOCATION SHOWN IS FROM RECORD INFORMATION.
7. A PRE–CONSTRUCTION CONFERENCE MEETING WILL BE HELD PRIOR TO CONSTRUCTION COMMENCEMENT.
8. PRIOR TO THE ISSUANCE OF A CERTIFICATE OF OCCUPANCY, ALL STOCKPILED MATERIALS, INCLUDING BUT NOT LIMITED TO STUMPS, BRUSH, AND CONSTRUCTION DEBRIS SHALL BE REMOVED FROM THE PROPERTY AND DISPOSED OF IN ACCORDANCE WITH NEW KENT COUNTY CODE OR ANY OTHER STATE OR FEDERAL REGULATIONS.
9. ALL PARKING LOT PAVEMENT STRIPING SHALL BE NON–REFLECTORIZED PAINT. WHITE SHALL BE USED FOR STANDARD PARKING SPACES AND BLUE FOR HANDICAPPED WITH HANDICAP SYMBOL. ALL STRIPES SHALL BE 4" WIDE. STOP BAR SHALL BE 24"WIDE. ALL MARKINGS MUST BE TYPE B, CLASS 1, THERMOPLASTIC. PAINT, STRIPING AND MARKINGS SHALL BE DONE IN ACCORDANCE WITH THE LATEST EDITION OF THE MANUAL ON UNIFORM TRAFFIC CONTROL DEVICES.
10. ONCE THE CONTRACT HAS BEEN AWARDED, THE GENERAL CONTRACTOR WILL BECOME THE DESIGNATED REGISTERED LAND DISTURBER.
11. CONTRACTOR IS TO CONTACT "MISS UTILITY" TO FIELD VERIFY LOCATION OF ALL UNDERGROUND UTILITIES 48 HOURS PRIOR TO ANY LAND DISTURBANCE ACTIVITIES.
12. WHERE NEW OR REPAIRED PAVEMENT ABUTS EXISTING PAVEMENT, THE TWO SURFACES ARE TO ALIGN WITH A SMOOTH TRANSITION AND POSITIVE DRAINAGE IS TO BE PROVIDED.
13. EXISTING TREES THAT ARE TO REMAIN SHALL NOT BE DAMAGED & ARE TO BE PROTECTED IN ACCORDANCE WITH THE VIRGINIA EROSION AND SEDIMENT CONTROL HANDBOOK (VESCH) STANDARD 3.38.
14. ALL DENUDED AREAS THAT ARE NOT TO BE COVERED BY PROPOSED DRIVES OR WALKS ARE TO BE GRADED FOR POSITIVE DRAINAGE, TOPSOILED & SEEDED IN ACCORDANCE WITH VESCH STANDARDS.
15. PERIMETER CONTROL SHALL BE INSTALLED AT STOCKPILE AREAS IN ACCORDANCE WITH VIRGINIA EROSION AND SEDIMENT CONTROL HANDBOOK (VESCH) STANDARDS.
16. ANY AND ALL UTILITIES AND/OR OBSTRUCTIONS (POWER POLES, TELEPHONE PEDESTALS, GUY WIRES, WATER METERS, ETC.) THAT ARE TO BE RELOCATED OR ADJUSTED DUE TO CONSTRUCTION SHALL BE DONE SO IN ACCORDANCE WITH ALL APPLICABLE REGULATIONS AND SHALL BE ARRANGED AND COORDINATED WITH THE OWNER.
17. ALL CONSTRUCTION METHODS AND MATERIALS SHALL CONFORM WITH THE CURRENT VIRGINIA DEPARTMENT OF HIGHWAY AND TRANSPORTATION ROAD AND BRIDGE STANDARDS, AND VIRGINIA EROSION AND SEDIMENTATION CONTROL REGULATIONS AND ANY OTHER APPLICABLE CITY OR STATE OR LOCAL ORDINANCES, CODES, AND LAWS.
18. THERE SHALL BE A R7–8 HANDICAP SIGN FOR THE PROPOSED HANDICAP PARKING SPACES WITH AN ADDITIONAL PLATE READING "PENALTY $100–$500 TOW AWAY ZONE". THE MOUNTING HEIGHT ON THE POSTS FOR HC SIGN SHALL BE 5 FT. MIN AND 7 FT. MAX. FROM THE FINISH GRADE TO THE BOTTOM OF THE SIGN(S).
    IF MULTIPLE SIGNS ARE USED:
    a) THE BOTTOM OF THE LOWEST SIGN SHALL BE NO LESS THAN 5 FT ABOVE THE FINISHED GRADE PER ADAAG 502.6
    b) THE BOTTOM OF THE HIGHEST SIGN SHALL BE NO MORE THAN 7 FT. ABOVE THE FINISHED GRADE PER VUSBC 1103.1.1.
    SPACES NOTED ON THESE PLANS AS VAN ACCESSIBLE SPACE, SHALL HAVE ADDITIONAL SIGNAGE READING "VAN ACCESSIBLE".
19. A LAND DISTURBANCE PERMIT IS REQUIRED. PRIOR TO ANY LAND DISTURBANCE ACTIVITY, ALL TREE PROTECTION FENCING MUST BE IN PLACE AND INSPECTED BY COUNTY ENVIRONMENTAL PERSONEL.
20. CONTRACTOR IS RESPONSIBLE FOR ANY DAMAGE TO EXISTING SITE.
21. PAVEMENT REMOVED FOR PROPOSED WORK OR DAMAGED PAVEMENT SHALL BE CUT BACK TO NEAREST CONSTRUCTION JOINT.
22. ALL EXISTING TREES TO REMAIN ARE TO RECEIVE TREE PROTECTION PER VESCH 3.38.
23. OUTDOOR TRASH RECEPTACLES, RECYCLE BINS, AND ASH URNS ARE TO BE BOLTED DOWN.
24. RECYCLE RECEPTACLES TO RECEIVE A RESTRAINED LABELED LID FOR RECYCLING CANS, PLASTIC, AND GLASS BOTTLES.

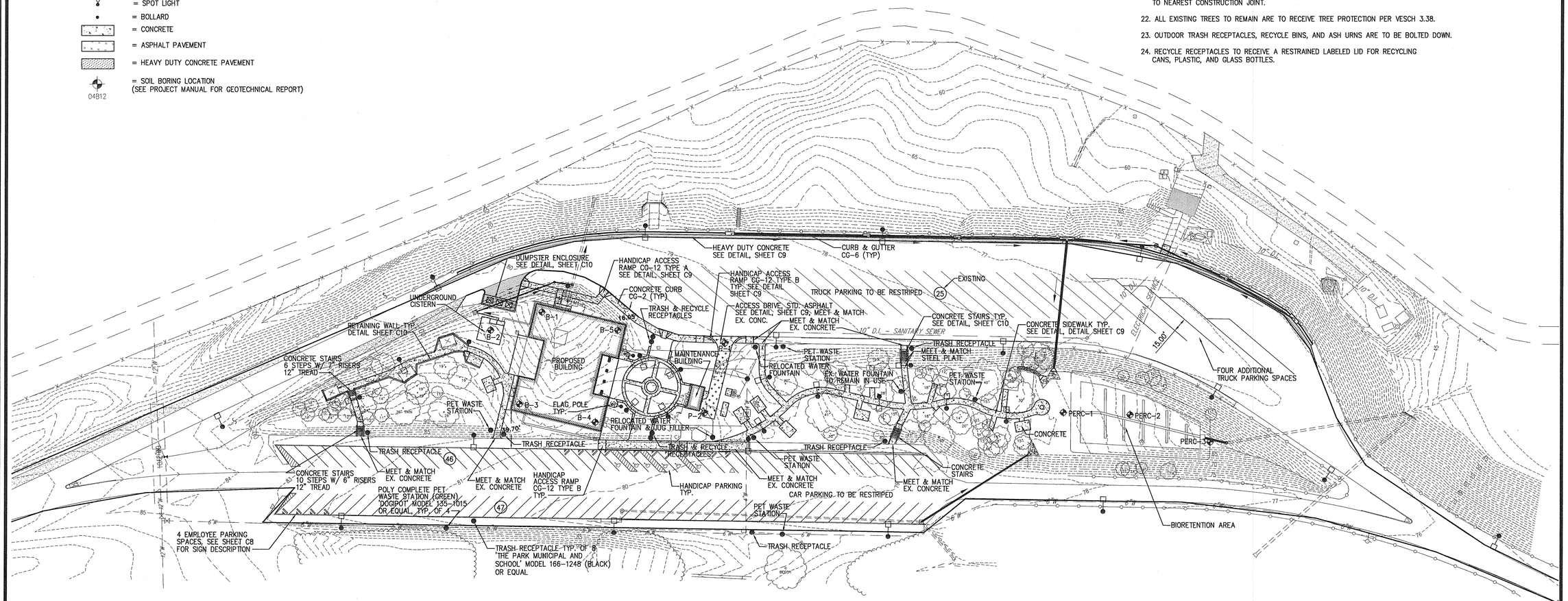

SITE PLAN

SCALE: 1'–50"

GRAPHIC SCALE
50' 0' 50' 100'
SCALE: 1" = 50'

ENGINEERS • ARCHITECTS • PLANNERS
DJG INC.
449 McLaws Circle, Williamsburg, VA 23185
Phone: 757.253.0673 Fax: 757.253.2319
Norfolk-Virginia Beach: 757.874.5015
www.djginc.com
COMMITTED TO EXCELLENCE

COMMONWEALTH OF VIRGINIA
DANIEL J. DE YOUNG
NO. 3517
8-3-06
PROFESSIONAL ENGINEER

THIS DOCUMENT CONTAINS INFORMATION PROPRIETARY TO DJG, INC. AND IS FURNISHED IN CONFIDENCE AS AN INSTRUMENT OF SERVICE FOR THE LIMITED PURPOSE OF EVALUATION, BIDDING OR CONSTRUCTION. IT MAY NOT BE REPRODUCED, DISTRIBUTED OR USED IN WHOLE OR IN PART OR THE MODIFICATION OF ANY DETAIL OR DESIGN WITHOUT THE EXPRESSED, WRITTEN CONSENT OF DJG, INC. RESERVING COPYRIGHT CLEARANCE.

REVISIONS

	DATE	DESCRIPTION

SITE PLAN
VIRGINIA DEPARTMENT OF TRANSPORTATION
NEW KENT SAFETY REST AREA AND INFORMATION CENTER
NEW KENT COUNTY, VIRGINIA

SCALE	AS NOTED
DESIGNED	MJG
DRAWN	MES
CHECKED	KMS
DATE	8/3/06

COMMISSION NUMBER
2070030

SHEET NUMBER
C2

LEGEND

EXISTING:

- (E) = EXISTING
- P = ELECTRIC BOX
- = WATER VALVE
- = FIRE HYDRANT
- = LIGHT POLE (L.P.)
- = POWER POLE
- = GUY WIRE
- = BOLLARD
- = SIGN
- W = UNDERGROUND WATER LINE
- GAS = UNDERGROUND GAS LINE
- TEL = UNDERGROUND TELEPHONE LINE
- OHE = OVERHEAD POWER/CATV LINE(S)
- OHT = OVERHEAD TELEPHONE LINE(S)
- = FENCE
- = CENTERLINE OF DITCH
- 18"RCP = STORMWATER PIPES
- R/W = RIGHT-OF-WAY
- 280 = CONTOURS (FEET)
- = EXISTING TREE
- = TREELINE
- 12"W = EXISTING WATERLINE
- 8"PVC = EXISTING SANITARY SEWER LINE

PROPOSED:

- TYP. = TYPICAL
- R = RADIUS
- = HANDICAP ACCESSIBLE SPACE
- = SITE LIGHT
- = SPOT LIGHT
- = BOLLARD
- = CONCRETE
- = ASPHALT PAVEMENT
- = HEAVY DUTY CONCRETE PAVEMENT
- = PAVER WALKWAY (HERRINGBONE PATTERN)
- = PAVER WALKWAY (CIRCULAR PATTERN)
- 04B12 = SOIL BORING LOCATION (SEE PROJECT MANUAL FOR GEOTECHNICAL REPORT)

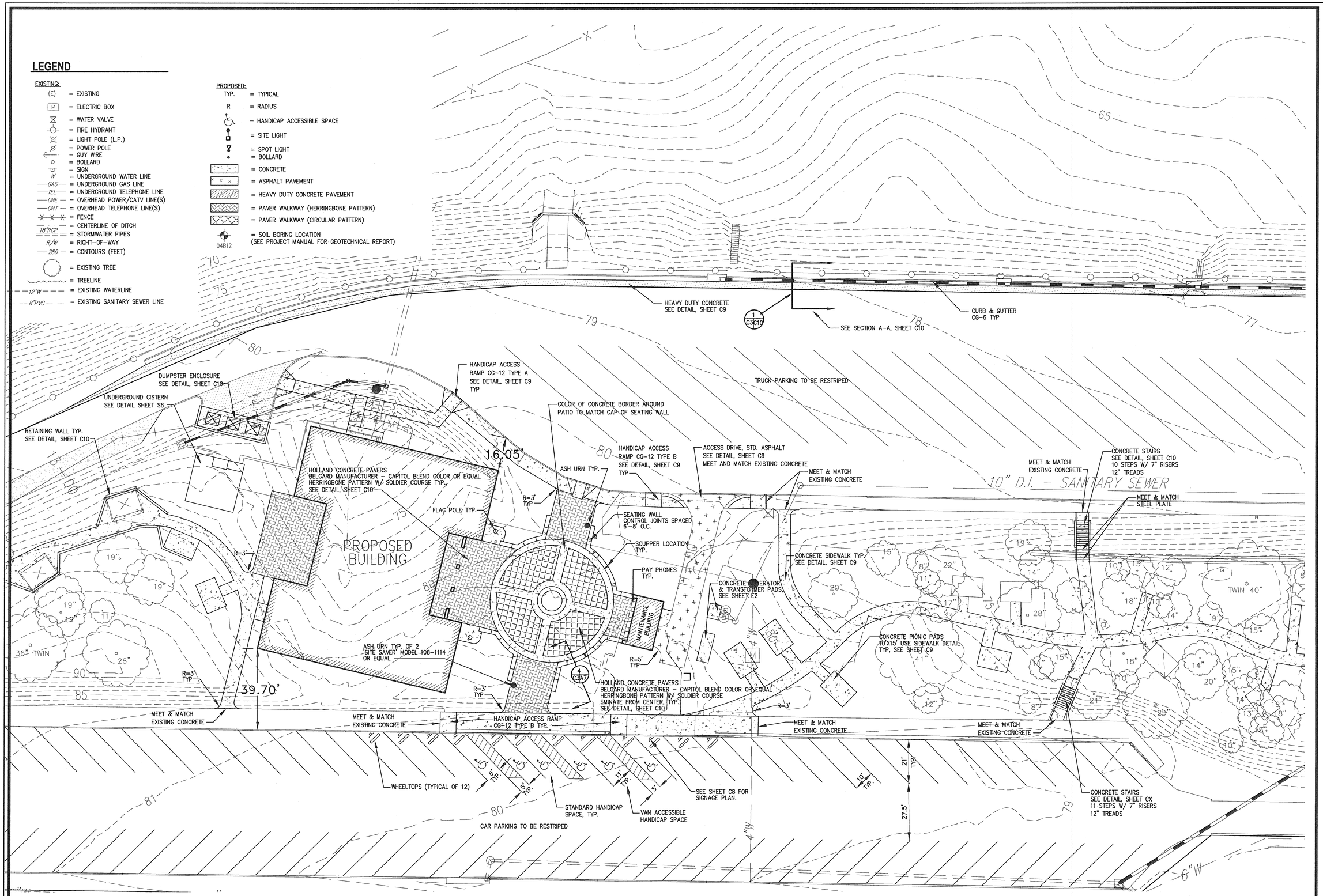

NORTH

ENLARGED SITE PLAN

SCALE: 1"=20"

GRAPHIC SCALE

20' 0' 20' 40'

SCALE: 1" = 20'

ENGINEERS • ARCHITECTS • PLANNERS

DJG INC.

449 McLaws Circle, Williamsburg, VA 23185
Phone: 757.253.0673 Fax: 757.253.2319
Norfolk-Virginia Beach: 757.874.5015
www.djginc.com

COMMITTED TO EXCELLENCE

COMMONWEALTH OF VIRGINIA PROFESSIONAL ENGINEER DANIEL J. DE YOUNG No.3657

THIS DOCUMENT CONTAINS INFORMATION PROPRIETARY TO D.J.G. INC. AND IS FURNISHED IN CONFIDENCE, AN INSTRUMENT OF SERVICE, FOR THE LIMITED PURPOSE OF EVALUATION, BIDDING OR CONSTRUCTION. IT MAY NOT BE REPRODUCED, DISTRIBUTED OR DISCLOSED IN WHOLE OR IN PART, OR THE MODIFICATION OF ANY DETAIL OR DESIGN WITHOUT THE EXPRESSED, WRITTEN CONSENT OF D.J.G. INC. ALL RIGHTS RESERVED. COPYRIGHT © D.J.G. INC.

REVISIONS	
DATE	DESCRIPTION

ENLARGED SITE PLAN

VIRGINIA DEPARTMENT OF TRANSPORTATION
NEW KENT SAFETY REST AREA AND INFORMATION CENTER
NEW KENT COUNTY, VIRGINIA

SCALE	AS NOTED
DESIGNED	MEP
DRAWN	MEP
CHECKED	KMS
DATE	8/3/06

COMMISSION NUMBER **2070030**

SHEET NUMBER **C3**

LEGEND

EXISTING:

- (E) = EXISTING
- P = ELECTRIC BOX
- = WATER VALVE
- = FIRE HYDRANT
- = LIGHT POLE (L.P.)
- = POWER POLE
- = GUY WIRE
- = BOLLARD
- = SIGN
- W = UNDERGROUND WATER LINE
- GAS = UNDERGROUND GAS LINE
- TEL = UNDERGROUND TELEPHONE LINE
- OHE = OVERHEAD POWER/CATV LINE(S)
- OHT = OVERHEAD TELEPHONE LINE(S)
- = FENCE
- = CENTERLINE OF DITCH
- 18"RCP = STORMWATER PIPES
- R/W = RIGHT-OF-WAY
- 280 = CONTOURS (FEET)
- = EXISTING TREE
- = TREELINE
- 12"W = EXISTING WATERLINE
- 8"PVC = EXISTING SANITARY SEWER LINE

PROPOSED:

- TYP. = TYPICAL
- = HANDICAP ACCESSIBLE SPACE
- = SITE LIGHT
- = SPOT LIGHT
- = BOLLARD
- = CONCRETE
- 04B12 = SOIL BORING LOCATION (SEE PROJECT MANUAL FOR GEOTECHNICAL REPORT)
- 280 = PROPOSED CONTOURS (FEET)
- SF = SILT FENCE PER VESCH 3.05
- IP = INLET PROTECTION PER VESCH 3.07
- OP = OUTLET PROTECTION PER VESCH 3.18
- ST = TEMPORARY SEDIMENT TRAP PER VESCH 3.13
- = PROPOSED STORMWATER PIPES
- = PROPOSED PERFORATED PIPE FOR BIORENTETION BASIN
- LOD = LIMIT OF DISTRUBANCE
- TC = TOP OF CURB
- FG = FINISHED GRADE
- FF = PROPOSED FINISH FLOOR ELEVATION
- HPS = HIGH POINT OF SWALE
- 280.0 FG/TC = PROP. SPOT ELEV.
- TP = EXISTING TREES TO BE PROTECTED

STORMWATER NETWORK INFORMATION

(C4–1) 1 ST'D. DI–2B REQ'D.
L=8' H=4.9' INV. 73.89'

(C4–1) TO (C4–2) 136' – 15" HDPE PIPE REQ'D. (5' COVER)
INV. IN 73.89' INV. OUT 71.99'

(C4–2) 1 ST'D. DI–2B REQ'D.
L=6' H=6.0' INV. 71.99'

(C4–2) TO (C4–3) 90' – 15" HDPE PIPE REQ'D. (6' COVER)
INV. IN 71.99' INV. OUT 70.73'

(C4–3) 1 ST'D. DI–2B REQ'D.
L=6' H=6.6' INV. 70.73'

(C4–3) TO (C4–4) 108' – 15" HDPE PIPE REQ'D. (8' COVER)
INV. IN 70.73' INV. OUT 69.21'

(C4–4) 1 ST'D. DI–2C REQ'D.
L=14' H=8.0' INV. 69.04'
ST'D. IS–1 REQ'D.

(C4–4) TO (C4–5) 134' – 24" HDPE PIPE REQ'D. (10' COVER)
INV. IN 69.04' INV. OUT 68.00'

(C4–5) 1 ADS PLASTIC END SECTION OR SIMILAR (24")
INV. 68.00'
4.00 CUBIC YDS. ST'D. EC–1 CLASS 1. REQ'D.

(C4–8) 1 ST'D. DI–2C REQ'D.
L=10' H=3.8' INV. 72.60'

(C4–8) TO (C4–7) 78' – 15" HDPE PIPE REQ'D. (4' COVER)
INV. IN 72.60' INV. OUT 71.95'

(C4–7) 1 ST'D. DI–2B REQ'D.
L=8' H=4.6' INV. 71.95'

(C4–7) TO (C4–6) 77' – 15" HDPE PIPE REQ'D. (5' COVER)
INV. IN 71.95' INV. OUT 70.80'

(C4–6) 4.1 VERT. FT. ST'D. MH–1 OR MH–2 REQ'D.
1 ST'D. MH–1 FRAME & COVER REQ'D.
INV. 70.70'

(C4–6) TO (C4–4) 90' – 15" HDPE PIPE REQ'D. (7' COVER)
INV. IN 70.70' INV. OUT 69.35'

(C4–9) 1 ADS PLASTIC END SECTION OR SIMILAR (18")
INV. 69.31'
1.15 CUBIC YDS. ST'D. EC–1 CLASS 1. REQ'D.

(C4–10) TO (C4–9) 130' – 18" HDPE PIPE REQ'D. (8' COVER)
INV. IN 70.48' INV. OUT 69.31'

(C4–10) MODIFY EXISTING DROP INLET
MODIFY TO ACCEPT NEW 18" HDPE PIPE
PROPOSED ADD'L. INV. 70.48'
ABANDON EXISTING 18" RCP OUTLET PIPE
ST'D. IS–1 REQ'D.

(C4–11) TO (C4–10) 305' – 15" EXISTING RCP
TO BE CLEANED OUT

(C4–11) 8.0 LIN. FT. EXISTING MH–1
TO BE CLEANED OUT

(C4–12) TO (C4–11) 10' – 15" EXISTING RCP
TO BE CLEANED OUT

(C4–12) EXISTING ST'D. DI–3B
TO BE CLEANED OUT

(C4–20) CISTERN TANK – SEE SHEET P6
INV. 73.36'

(C4–17) TO (C4–13) 28' – 8" PVC PIPE REQ'D. (4' COVER)
INV. IN 75.17' INV. OUT 74.75'

(C4–13) 1 ST'D. DI–1 REQ'D.
H=4.3' INV. 73.20'
ST'D. IS–1 REQ'D.

(C4–13) TO (C4–14) 86' – 12" HDPE PIPE REQ'D. (12' COVER)
INV. IN 73.20' INV. OUT 68.90'

(C4–14) 11.5 VERT. FT. ST'D. MH–2 REQ'D.
1 ST'D. MH–1 FRAME & COVER REQ'D.
INV. 68.80'
ST'D. IS–1 REQ'D.
1 ST'D. SL–1 REQ'D.

(C4–14) TO (C4–15) 19' – 12" HDPE PIPE REQ'D. (13' COVER)
INV. IN 68.80' INV. OUT 67.85'

(C4–15) 12.7 VERT. FT. ST'D. MH–2 REQ'D.
1 ST'D. MH–1 FRAME & COVER REQ'D.
INV. 67.54'
ST'D. IS–1 REQ'D.
1 ST'D. SL–1 REQ'D.

(C4–15) TO (C4–16) 88' – EXIST 24" RCP
TO BE CLEANED OUT

(C4–16) EXISTING END SECTION (24")

(C4–17) EXISTING HEADWALL (24")

(C4–18) TO (C4–17) 178' – EXIST 24" RCP
TO BE CLEANED OUT

(C4–18) 10.0 VERT. FT. ST'D MH–2 REQ'D.
1 ST'D. MH–1 FRAME & COVER REQ'D.
INV. 59.32'
REMOVE EXISTING 24" END SECTION

(C4–19) TO (C4–18) 30' – 24" HDPE PIPE REQ'D. (6' COVER)
INV. IN 60.30' INV. OUT 59.72'

(C4–19) 1 ST'D. DI–1 REQ'D.
(OVERFLOW STR)
H=8.7'
SCREENED ORIFICE 24"W X 10"H
INV. 60.30'

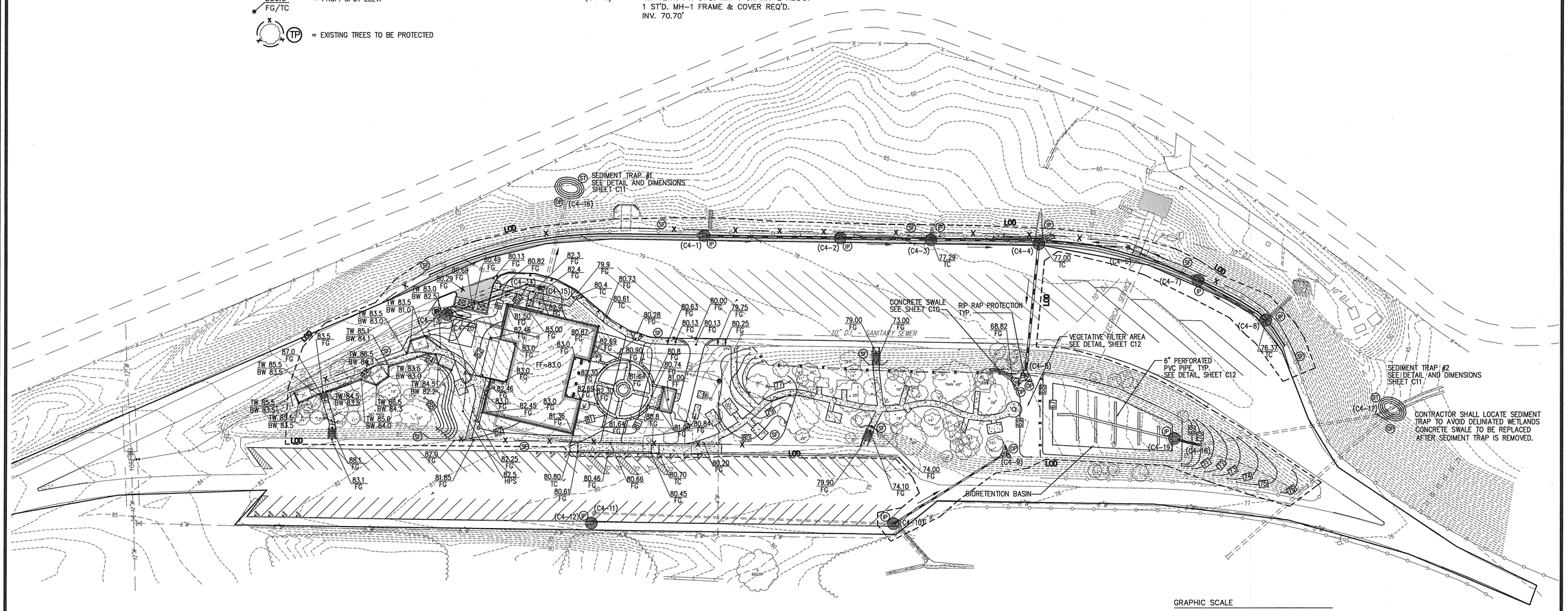

GRAPHIC SCALE
50' 0' 50' 100'
SCALE: 1" = 50'

E&S CONTROL, GRADING, AND DRAINAGE PLAN

NORTH SCALE: 1'–50"

ENGINEERS • ARCHITECTS • PLANNERS
449 McLaws Circle, Williamsburg, VA 23185
Phone: 757.253.0673 Fax: 757.253.2319
Norfolk-Virginia Beach: 757.874.5015
www.djginc.com
DJG INC.
COMMITTED TO EXCELLENCE

COMMONWEALTH OF VIRGINIA
DANIEL J. DE YOUNG
No. 3706
PROFESSIONAL ENGINEER

THIS DOCUMENT CONTAINS INFORMATION PROPRIETARY TO D.J.G., INC. AND IS FURNISHED IN CONFIDENCE AN INSTRUMENT OF SERVICE FOR THE LIMITED PURPOSE OF EVALUATION, BIDDING OR CONSTRUCTION WITH RESPECT TO THE PROJECT OR TRANSACTION. IN WHOLE OR IN PART, OR THE MODIFICATION OF ANY DETAIL, OR DESIGN WITHOUT THE EXPRESSED, WRITTEN CONSENT OF D.J.G., INC. IS PROHIBITED. ALL RIGHTS RESERVED. COPYRIGHT (C) 2006.

REVISIONS		
	DATE	DESCRIPTION

E&S CONTROL, GRADING, & STORM DRAIN PLAN

VIRGINIA DEPARTMENT OF TRANSPORTATION
NEW KENT SAFETY REST AREA AND INFORMATION CENTER
NEW KENT COUNTY, VIRGINIA

SCALE	DESIGNED	DRAWN	CHECKED	DATE
AS NOTED	MJG	MES	KMS	8/3/06

COMMISSION NUMBER
2070030

SHEET NUMBER
C4

THE DIVERTER VALVE IS INSTALLED TO DIVERT THE FIRST RINSE OF THE ROOF TO BE DISCHARGED TO THE SPLASH BLOCK. THIS FIRST RINSE WILL CONTAIN MOST OF THE DEBRIS WASHED OFF THE ROOF WITH THE RAIN. THE ADJUSTABLE VALVE BALL WILL ALLOW FOR FINE TUNING OF THE DIVERTED WATER TO ALLOW FOR THE PROPER RINSING OF THE ROOF AND GUTTER SYSTEM OF DERBIES.

VIEW A-A WET SYSTEM DIVERTER PIPE

NOT TO SCALE (TYPICAL 12 LOCATIONS)

NOTES:

PROVIDE SMART-VALVE KIT MANUFACTURED BY FLOWTRUE INTERNATIONAL CORP. METARIE, LA 70003

PROVIDE VALVE ASSEMBLY THAT HAS AN ADJUSTABLE INLET OPENING IN FLOAT DEVICE TO ALLOW ADJUSTMENT OF DIVERTED FLOW RATE.

SMART VALVE DIVERTER KIT IS TO INCLUDE:
- SANITARY TEE (ALL HUB) AND THREADED ADAPTER OPTION FOR DIVERTER TEE.
- DEFLECTOR, PVC RING
- VALVE ASSEMBLY (SPRING, BALL, SUPPORT ROD)
- RUBBER VALVE SEAT

RAIN WATER PUMP & TANK PIPE ROUTING DETAIL

N.T.S.

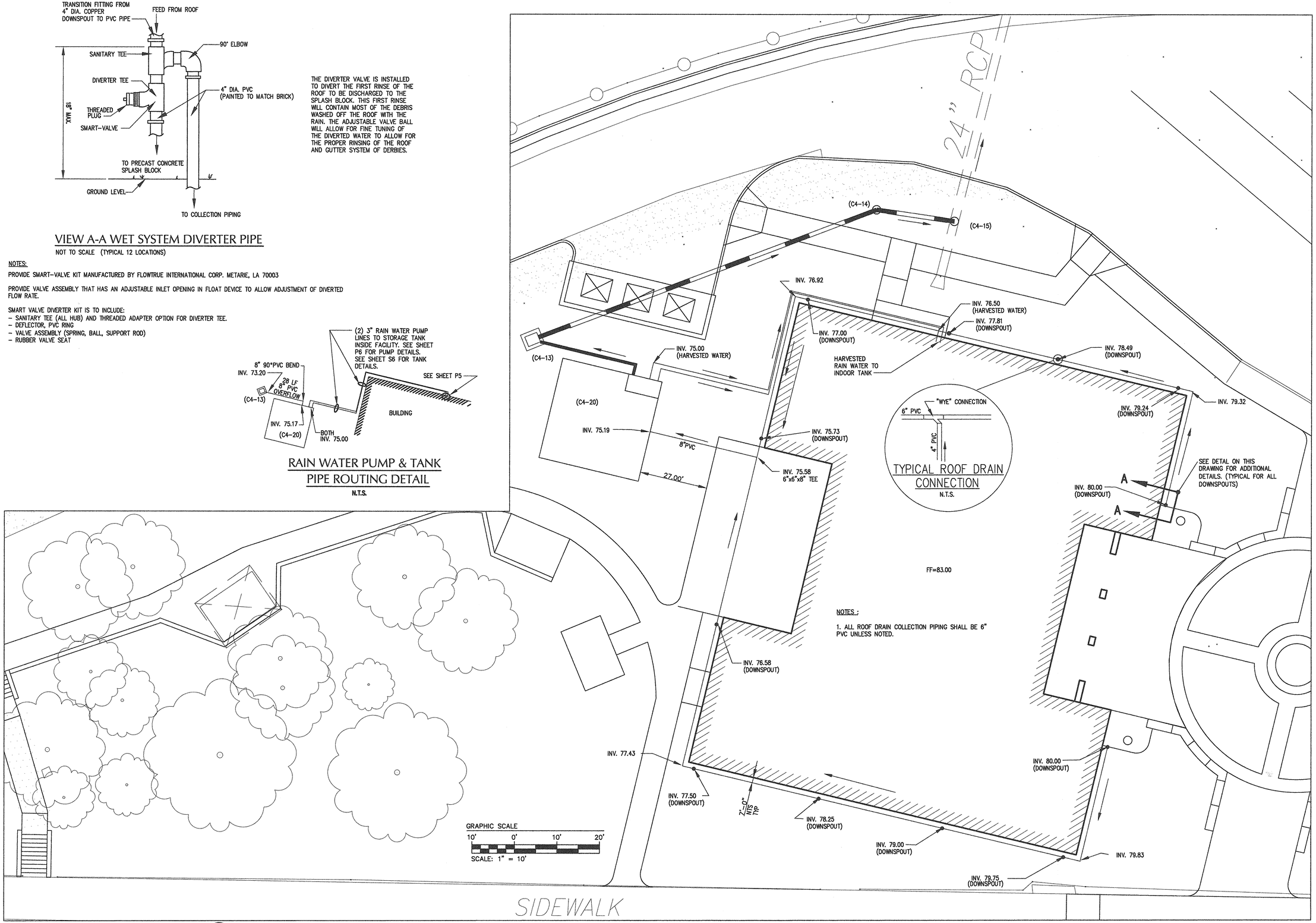

NORTH

ROOF DRAIN & CISTERN PLAN WITH DETAILS

SCALE: 1'-10"

ENGINEERS • ARCHITECTS • PLANNERS
449 McLaws Circle, Williamsburg, VA 23185
Phone: 757.253.0673 Fax: 757.253.2319
Norfolk-Virginia Beach: 757.874.5015
www.dgainc.com
COMMITTED TO EXCELLENCE

COMMONWEALTH OF VIRGINIA
DANIEL J. DE YOUNG
No.3517
PROFESSIONAL ENGINEER

THIS DOCUMENT CONTAINS INFORMATION PROPRIETARY TO D.G., INC., AND IS FURNISHED IN CONFIDENCE AND MAY NOT BE DISCLOSED TO OTHERS WITHOUT PRIOR WRITTEN CONSENT AND REVIEW, OR CONSTRUCTION OF A SPECIFIC PROJECT, REPRODUCTION OF THIS DOCUMENT, IN WHOLE OR IN PART, OR THE MAKING OF ANY DERIVATIVE WORK WITHOUT WRITTEN CONSENT OF D.G., INC. IS PROHIBITED. ALL RIGHTS RESERVED. COPYRIGHT (C) 2006.

REVISIONS

DATE	DESCRIPTION

ROOF DRAIN & CISTERN PLAN W/ DETAILS

VIRGINIA DEPARTMENT OF TRANSPORTATION

NEW KENT SAFETY REST AREA AND INFORMATION CENTER

NEW KENT COUNTY, VIRGINIA

SCALE	DESIGNED	DRAWN	CHECKED	DATE
AS NOTED	MEP	MEP	KMS	8/3/06

COMMISSION NUMBER
2070030

SHEET NUMBER
C5

LEGEND

EXISTING:

- (E) = EXISTING
- P = ELECTRIC BOX
- = WATER VALVE
- = FIRE HYDRANT
- = LIGHT POLE (L.P.)
- = POWER POLE
- = GUY WIRE
- = BOLLARD
- = SIGN
- W = UNDERGROUND WATER LINE
- GAS = UNDERGROUND GAS LINE
- TEL = UNDERGROUND TELEPHONE LINE
- OHE = OVERHEAD POWER/CATV LINE(S)
- OHT = OVERHEAD TELEPHONE LINE(S)
- = FENCE
- = CENTERLINE OF DITCH
- 18"RCP = STORMWATER PIPES
- R/W = RIGHT-OF-WAY
- 280 = CONTOURS (FEET)
- = EXISTING TREE
- = TREELINE
- 12"W = EXISTING WATERLINE
- 8"PVC = EXISTING SANITARY SEWER LINE

PROPOSED:

- (P) = PROPOSED
- = CONCRETE PAVEMENT
- M = WATER METER
- = SITE LIGHT
- = SPOT LIGHT
- = BOLLARD
- 8" WL = PROP. WATER LINE
- 6" SAN = PROP. SAN. SEWER
- = PROP. FIRE HYDRANT

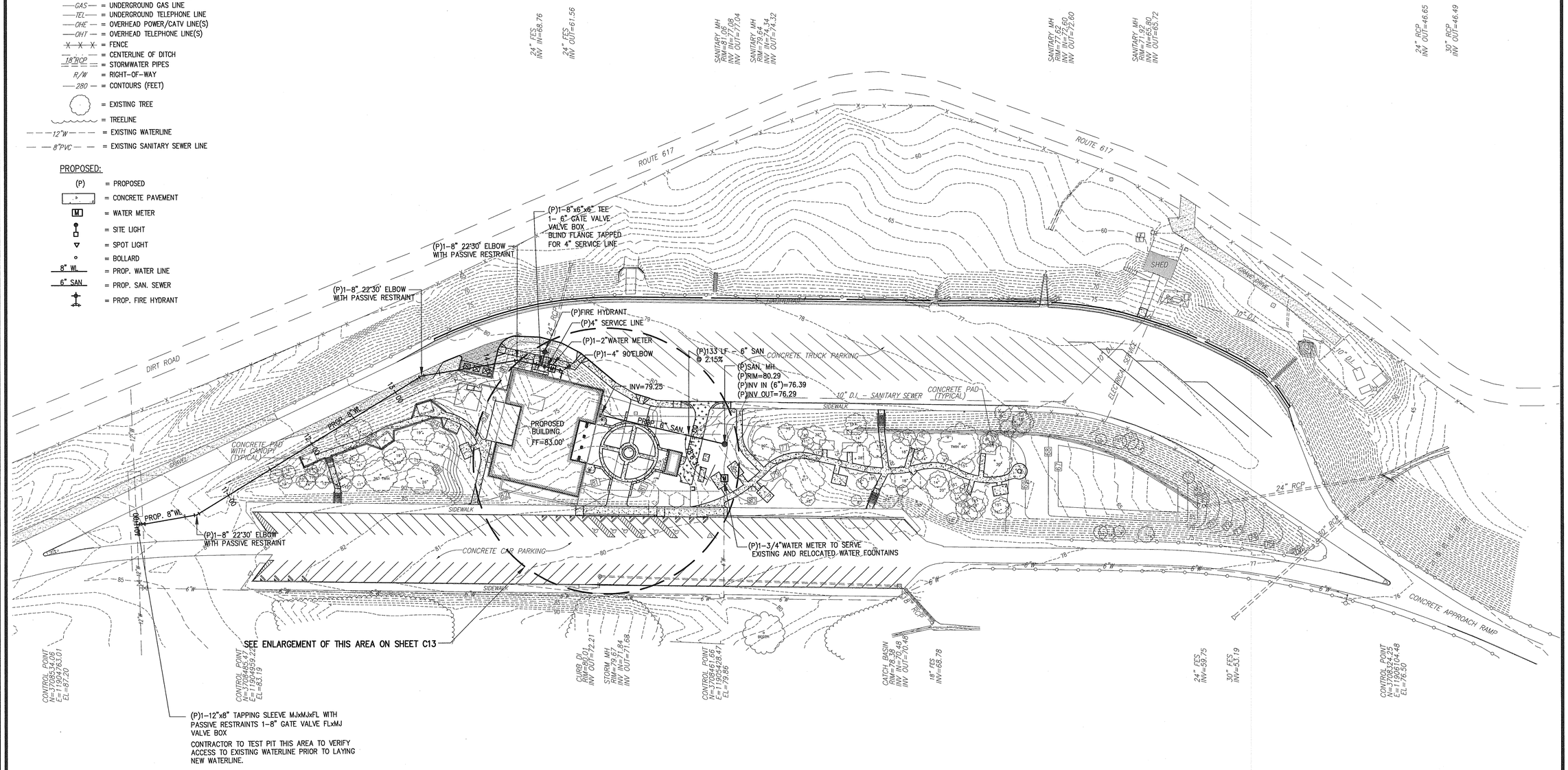

NORTH

UTILITY PLAN

SCALE: 1"=50'

GRAPHIC SCALE

50' 0' 50' 100'

SCALE: 1" = 50'

ENGINEERS • ARCHITECTS • PLANNERS

DJG INC.

449 McLaws Circle, Williamsburg, VA 23185
Phone: 757.253.0673 Fax: 757.253.2319
Norfolk-Virgina Beach: 757.874.5015
www.djginc.com

COMMITTED TO EXCELLENCE

COMMONWEALTH OF VIRGINIA
DANIEL J. DE YOUNG
No. 3517
8-3-06
PROFESSIONAL ENGINEER

THIS DOCUMENT CONTAINS INFORMATION PROPRIETARY TO DJG, INC., AND IS FURNISHED IN CONFIDENCE AN INSTRUMENT OF SERVICE FOR THE LIMITED PURPOSE OF EVALUATION, BIDDING OR CONSTRUCTION. IT MAY NOT BE REPRODUCED, DISTRIBUTED OR DISCLOSED IN WHOLE OR IN PART, OR THE MODIFICATION OF ANY DETAIL, OR DESIGN WITHOUT THE EXPRESSED WRITTEN CONSENT OF DJG, INC. IS PROHIBITED. ALL RIGHTS RESERVED.

REVISIONS

#	DATE	DESCRIPTION

UTILITY PLAN

VIRGINIA DEPARTMENT OF TRANSPORTATION
NEW KENT SAFETY REST AREA AND INFORMATION CENTER
NEW KENT COUNTY, VIRGINIA

SCALE AS NOTED
DESIGNED BMB
DRAWN BMB
CHECKED KAS
DATE 8/3/06

COMMISSION NUMBER **2070030**

SHEET NUMBER **C6**

8 OF 63

SIGN NOTES:

1. THE CONTRACTOR SHALL REPLACE ALL SIGNS AND POSTS WITHIN THE LIMITS OF THE REST AREA RIGHT OF WAY.
2. ALL SIGNS SHALL MEET THE REQUIREMENTS OF THE VDOT SPECIFICATIONS AND STANDARDS.
3. WOOD POST (SIZED PER T&S 171) SHALL BE USED FOR SIGNS WITH THE EXCEPTION OF "NO PARKING" AND "HANDICAPPED" SIGNS WHICH MAY BE INSTALLED ON U-TYPE STEEL POSTS AND INTERSTATE SIGNS, PER ROAD AND BRIDGE STANDARDS.
4. ALL THE REQUIREMENTS OF THE CURRENT EDITION OF THE MANUAL ON UNIFORM TRAFFIC CONTROL DEVICES (2003 EDITION) SHALL BE COMPLIED WITH AND MADE PART OF THIS PLAN.
5. ANY SIGNS ATTACHED TO POSTS OR POLES OTHER THAN SIGN STRUCTURES SHALL BE ATTACHED USING STAINLESS STEEL BANDING.

PAVEMENT MARKING NOTES:

1. PAVEMENT MARKINGS MATERIAL SHALL BE TYPE B, CLASS VI ON MAIN LINE (INCLUDING GORE AREA); SHALL BE TYPE B, CLASS I ON ASPHALT CONCRETE SURFACES; SHALL BE TYPE B, CLASS III ON HYDRAULIC CEMENT CONCRETE SURFACES.
2. PAVEMENT MARKING MATERIAL SHALL BE WATERBORNE PAINT ON ANY PARKING LOT SURFACE THAT IS BEING SEALED WITH A COAL TAR PITCH PRODUCT. FIRST APPLICATION SHALL BE 15 MIL WFT WITHOUT BEADS AND LEFT TO DRY. A SECOND APPLICATION OF 15 MIL WFT WITH BEADS SHALL THEN BE APPLIED.
3. GORE AREAS AFFECTED BY PROJECT SHALL HAVE SNOW PLOWABLE RAISED PAVEMENT MARKERS.

LEGEND

EXISTING:

- (E) = EXISTING
- P = ELECTRIC BOX
- = WATER VALVE
- = FIRE HYDRANT
- = LIGHT POLE (L.P.)
- = POWER POLE
- = GUY WIRE
- = BOLLARD
- = SIGN
- W = UNDERGROUND WATER LINE
- GAS = UNDERGROUND GAS LINE
- TEL = UNDERGROUND TELEPHONE LINE
- OHE = OVERHEAD POWER/CATV LINE(S)
- OHT = OVERHEAD TELEPHONE LINE(S)
- = FENCE
- = CENTERLINE OF DITCH
- 18"RCP = STORMWATER PIPES
- R/W = RIGHT-OF-WAY
- 280 = CONTOURS (FEET)
- = EXISTING TREE
- = TREELINE
- 12"W = EXISTING WATERLINE
- 8"PVC = EXISTING SANITARY SEWER LINE

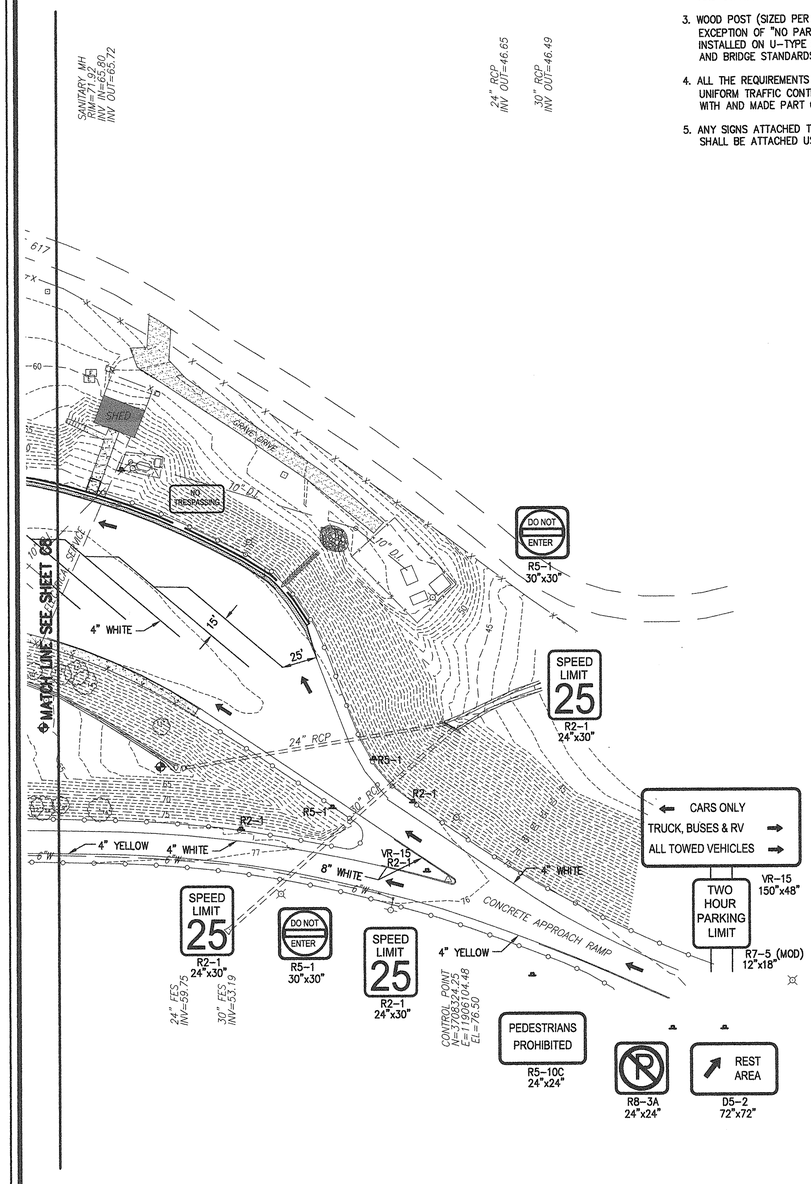

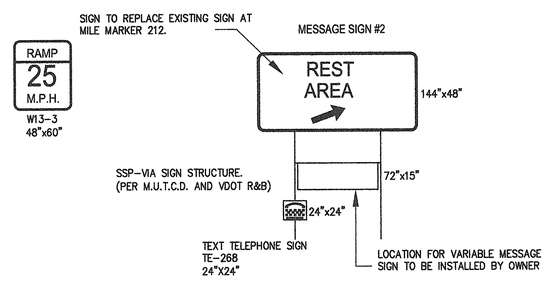

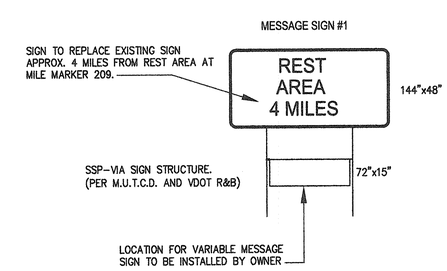

NORTH

SIGNAGE AND PAVEMENT MARKING

SCALE: 1"=50'

GRAPHIC SCALE
50' 0' 50' 100'
SCALE: 1" = 50'

ENGINEERS • ARCHITECTS • PLANNERS
449 McLaws Circle, Williamsburg, VA 23185
Phone: 757.253.0673 Fax: 757.253.2319
Norfolk-Virginia Beach: 757.874.5015
www.dgainc.com
DJG INC.
COMMITTED TO EXCELLENCE

COMMONWEALTH OF VIRGINIA
DANIEL J. DE YOUNG
No.3517
8-3-06
PROFESSIONAL ENGINEER

THIS DOCUMENT CONTAINS INFORMATION PROPRIETARY TO D.J.G. INC. AND IS FURNISHED IN CONFIDENCE, IN AN INSTRUMENT OF SERVICE, FOR THE LIMITED PURPOSE OF EVALUATION, BIDDING OR CONSTRUCTION WITH D.J.G. INC. PROJECTS. IT MAY NOT BE REPRODUCED IN WHOLE OR IN PART, OR THE MODIFICATION OF ANY DETAIL OR DESIGN WITHOUT THE EXPRESSED, WRITTEN CONSENT OF D.J.G. INC. IT IS PROTECTED BY FEDERAL COPYRIGHT LAWS.

REVISIONS	
DATE	DESCRIPTION

SIGNAGE & PAVEMENT MARKING PLAN #1

VIRGINIA DEPARTMENT OF TRANSPORTATION
NEW KENT SAFETY REST AREA AND INFORMATION CENTER
NEW KENT COUNTY, VIRGINIA

SCALE	AS NOTED
DESIGNED	BMB
DRAWN	BMB
CHECKED	KMS
DATE	8/3/06

COMMISSION NUMBER
2070030

SHEET NUMBER
C7

LEGEND

EXISTING:

- (E) = EXISTING
- P = ELECTRIC BOX
- = WATER VALVE
- = FIRE HYDRANT
- = LIGHT POLE (L.P.)
- = POWER POLE
- = GUY WIRE
- = BOLLARD
- = SIGN
- W = UNDERGROUND WATER LINE
- GAS = UNDERGROUND GAS LINE
- TEL = UNDERGROUND TELEPHONE LINE
- OHE = OVERHEAD POWER/CATV LINE(S)
- OHT = OVERHEAD TELEPHONE LINE(S)
- = FENCE
- = CENTERLINE OF DITCH
- 18"RCP = STORMWATER PIPES
- R/W = RIGHT-OF-WAY
- 280 = CONTOURS (FEET)
- = EXISTING TREE
- = TREELINE
- 12"W = EXISTING WATERLINE
- 8"PVC = EXISTING SANITARY SEWER LINE

SIGN NOTES:

1. THE CONTRACTOR SHALL REPLACE ALL SIGNS AND POSTS WITHIN THE LIMITS OF THE REST AREA RIGHT OF WAY.
2. ALL SIGNS SHALL MEET THE REQUIREMENTS OF THE VDOT SPECIFICATIONS AND STANDARDS.
3. WOOD POST (SIZED PER T&S 171) SHALL BE USED FOR SIGNS WITH THE EXCEPTION OF "NO PARKING" AND "HANDICAPPED" SIGNS WHICH MAY BE INSTALLED ON U-TYPE STEEL POSTS AND INTERSTATE SIGNS, PER ROAD AND BRIDGE STANDARDS.
4. ALL THE REQUIREMENTS OF THE CURRENT EDITION OF THE MANUAL ON UNIFORM TRAFFIC CONTROL DEVICES (2003 EDITION) SHALL BE COMPLIED WITH AND MADE PART OF THIS PLAN.
5. ANY SIGNS ATTACHED TO POSTS OR POLES OTHER THAN SIGN STRUCTURES SHALL BE ATTACHED USING STAINLESS STEEL BANDING.
6. VIRGINIA REST AREA MILE SIGN IS DETAILED IN THE TRAFFIC ENGINEERING MEMORANDUMS WHICH CAN BE PROVIDED TO CONTRACTOR, WITH MODIFIED LETTER HEIGHT TO 8", AND MODIFIED COLORS TO WHITE ON BLUE FIELD.
7. EISENHOWER INTERSTATE SYSTEM SIGN IS DETAILED IN THE TRAFFIC ENGINEERING MEMORANDUMS WHICH CAN BE PROVIDED TO THE CONTRACTOR.

PAVEMENT MARKING NOTES:

1. PAVEMENT MARKINGS MATERIAL SHALL BE TYPE B, CLASS VI ON MAIN LINE (INCLUDING GORE AREA); SHALL BE TYPE B, CLASS I ON ASPHALT CONCRETE SURFACES; SHALL BE TYPE B, CLASS III ON HYDRAULIC CEMENT CONCRETE SURFACES.
2. PAVEMENT MARKING MATERIAL SHALL BE WATERBORNE PAINT ON ANY PARKING LOT SURFACE THAT IS BEING SEALED WITH A COAL TAR PITCH PRODUCT. FIRST APPLICATION SHALL BE 15 MIL WFT WITHOUT BEADS AND LEFT TO DRY. A SECOND APPLICATION OF 15 MIL WFT WITH BEADS SHALL THEN BE APPLIED.
3. GORE AREAS AFFECTED BY PROJECT SHALL HAVE SNOW PLOWABLE RAISED PAVEMENT MARKERS.

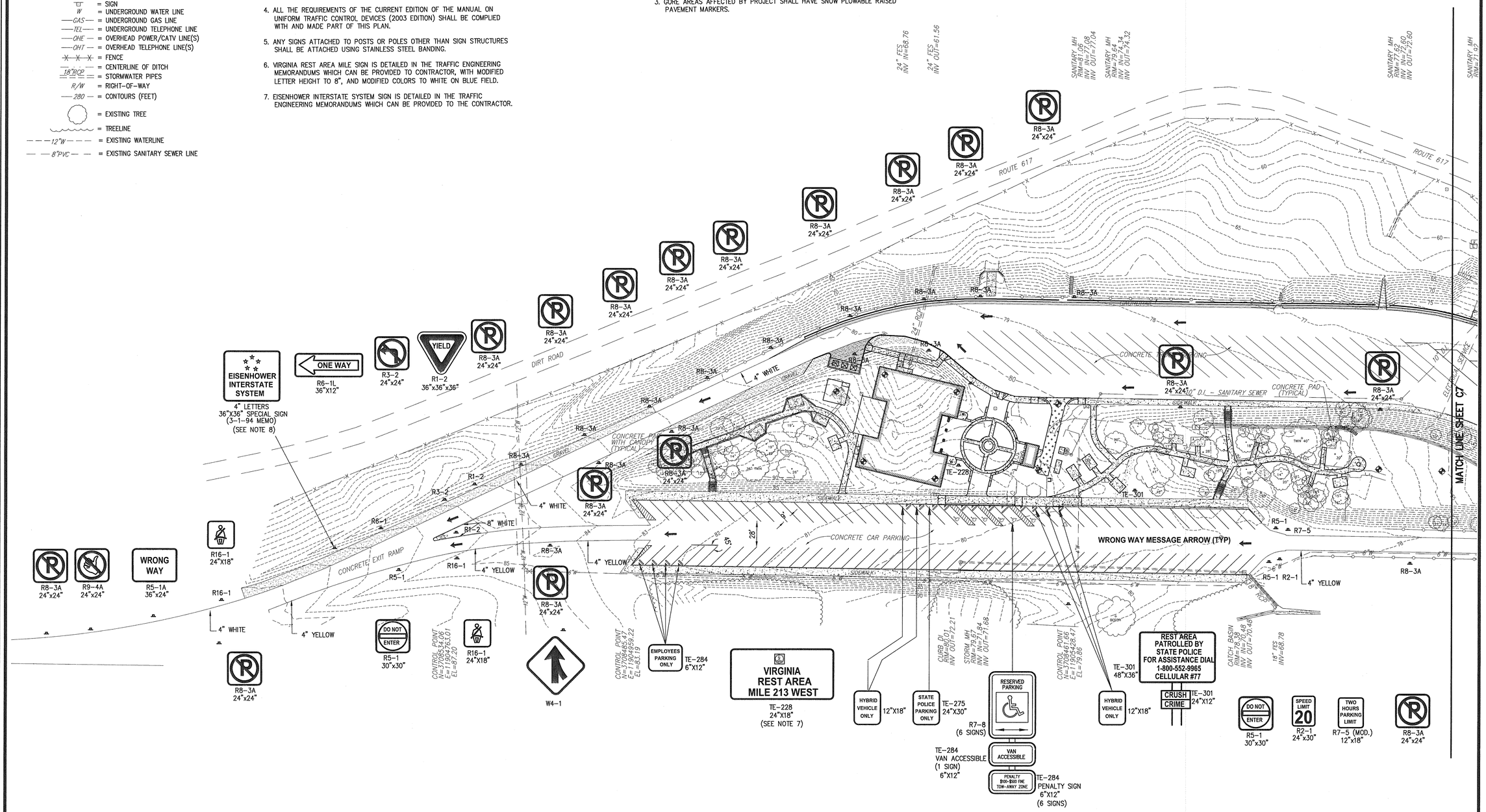

NORTH

SIGNAGE AND PAVEMENT MARKING

SCALE: 1"=50'

GRAPHIC SCALE

50' 0' 50' 100'

SCALE: 1" = 50'

ENGINEERS • ARCHITECTS • PLANNERS

DJ INC.

449 McLaws Circle, Williamsburg, VA 23185
Phone: 757.253.0673 Fax: 757.253.2319
Norfolk-Virginia Beach: 757.874.5015
www.djginc.com

COMMITTED TO EXCELLENCE

COMMONWEALTH OF VIRGINIA
DANIEL J. DE YOUNG
No. 3517
03-08-06
PROFESSIONAL ENGINEER

REVISIONS

DATE	DESCRIPTION

THIS DOCUMENT CONTAINS INFORMATION PROPRIETARY TO DJG, INC. AND IS FURNISHED IN CONFIDENCE, AN INSTRUMENT OF SERVICE FOR THE LIMITED PURPOSE OF EVALUATION, BIDDING OR CONSTRUCTION. IT MAY NOT BE REPRODUCED, DISTRIBUTED OR DISCLOSED IN WHOLE OR IN PART, OR THE MODIFICATION OF ANY DETAIL OR SERVICE RELATED THERETO, WITHOUT THE EXPRESSED, WRITTEN CONSENT OF DJG, INC. COPYRIGHT (C) 2006. ALL RIGHTS RESERVED.

SIGNAGE & PAVEMENT MARKING PLAN #2

VIRGINIA DEPARTMENT OF TRANSPORTATION

NEW KENT SAFETY REST AREA AND INFORMATION CENTER

NEW KENT COUNTY, VIRGINIA

SCALE	DESIGNED	DRAWN	CHECKED	DATE
AS NOTED	BMB	BMB	KMS	8/3/06

COMMISSION NUMBER 2070030

SHEET NUMBER C8

P:\2070030\Civil Drawings\2070030_C8.dwg, 24x36 Sheet (2), 08/03/2006 02:43:04 PM

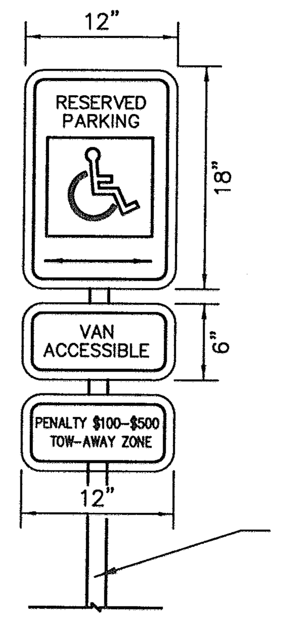

NOTES:

1. BOTTOM OF LOWEST SIGN SHALL BE MOUNTED NO LESS THAN 5 FT. FROM FINISH GRADE. HIGHEST SIGN SHALL BE MOUNTED NO HIGHER THAN 7 FT. ABOVE FINSISH GRADE.
2. MOUNT 6"x12" "VAN ACCESSIBLE" SIGN DIRECTLY BELOW "RESERVED PARKING" SIGN FOR ONE (1) OF THE TWO (2) SIGNS PROVIDED ON SITE.
3. BURY POST A MINIMUM OF 3 FEET.

POST SHALL BE U-TYPE ROLLED STEEL @ 2 LBS./FT. AND GALVANIZED IN ACCORDANCE WITH ASTM A123, OR PRESSURE TREATED POST

R 7-8 12" x 18" (PER MANUAL ON UNIFORM CONTROL DEVICES)

NOT TO SCALE

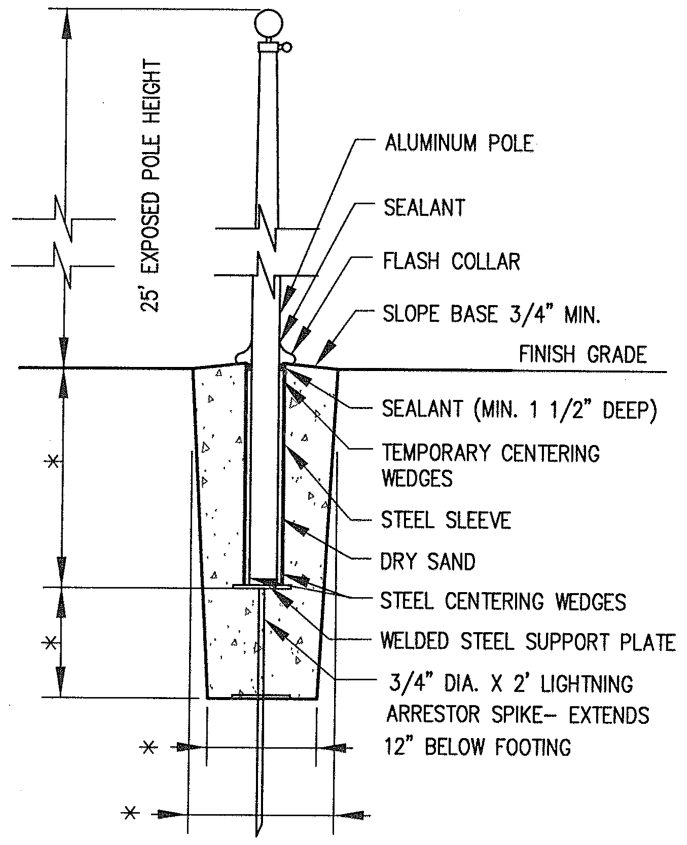

*NOTE: CONCRETE FOUNDATION SHALL BE PER POLE MANUFACTURERS DESIGN

FLAG POLE DETAIL

NOT TO SCALE

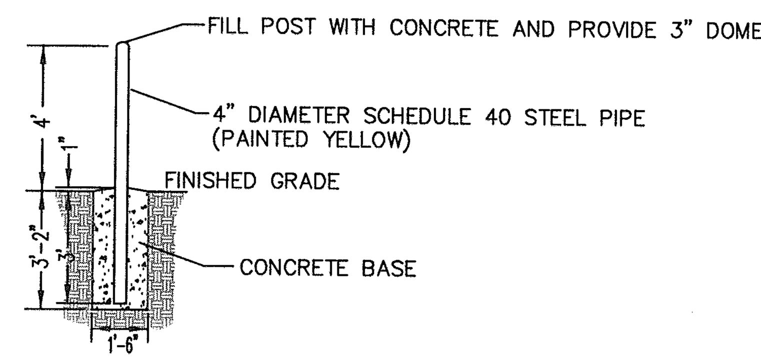

TYPICAL BOLLARD

NOT TO SCALE

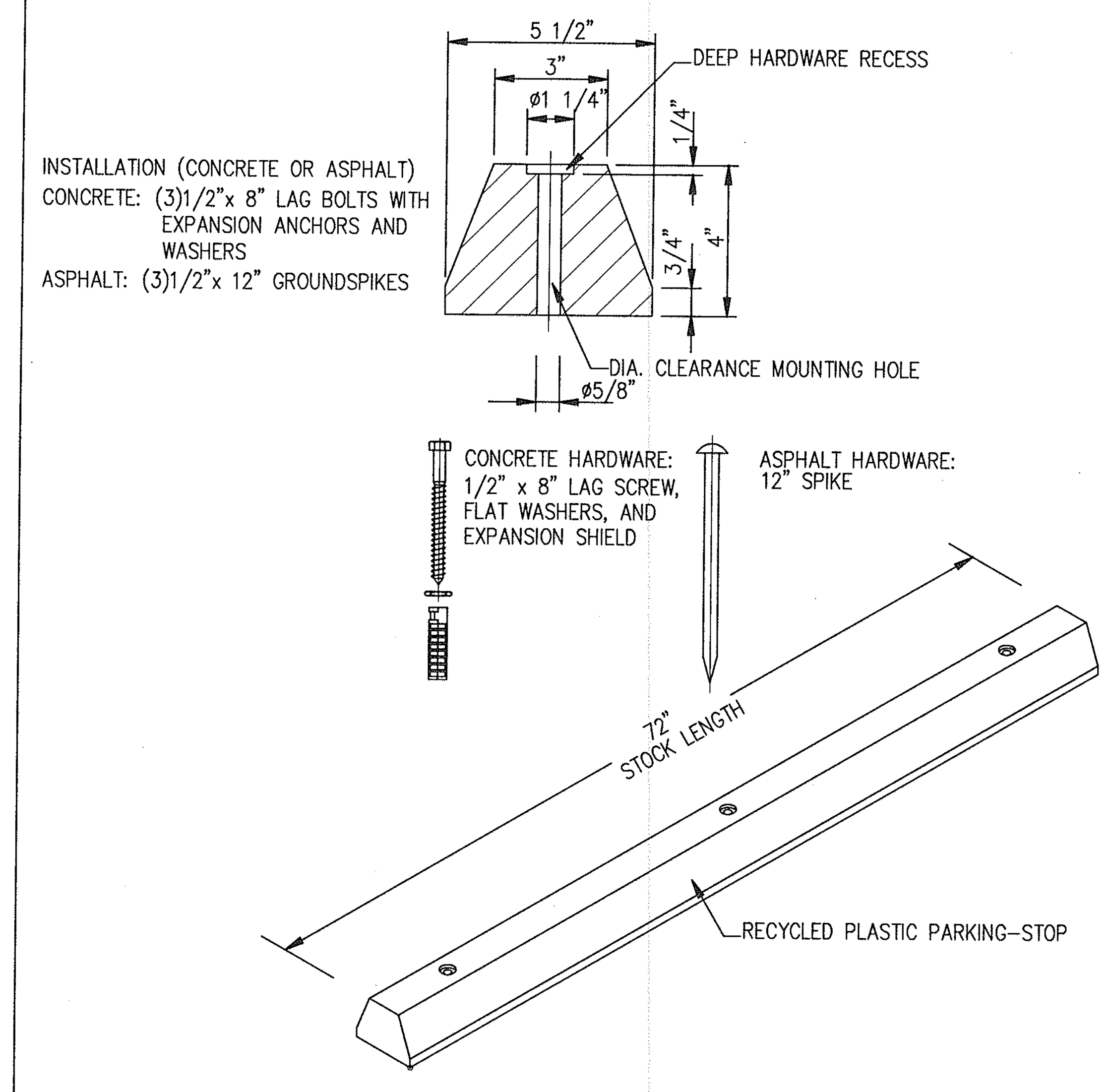

PLASTIC WHEEL STOP

NOT TO SCALE

Source: American Floor Products Co., Inc.

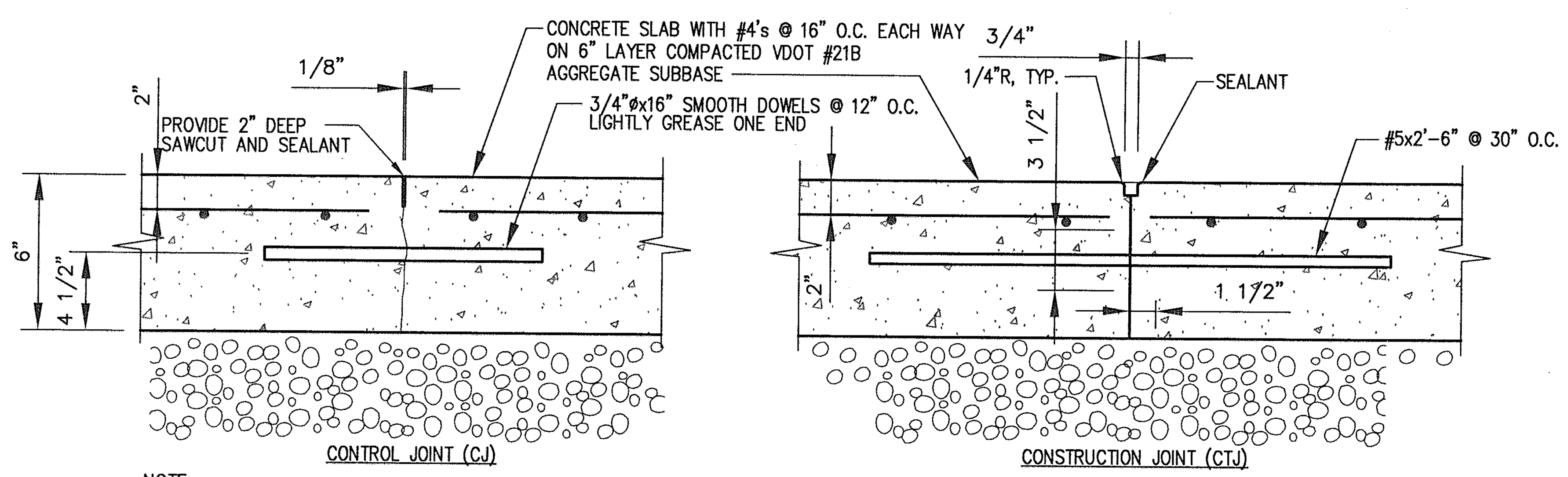

NOTE:
REINF. DISCONTINUOUS @ JOINT

NOTE:
REINF. DISCONTINUOUS @ JOINT

TYPICAL CONCRETE PAVEMENT JOINTS

SCALE: NOT TO SCALE

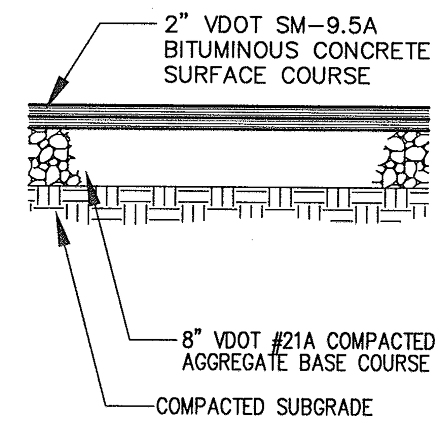

TYPICAL STANDARD-DUTY PAVEMENT SECTION

NOT TO SCALE

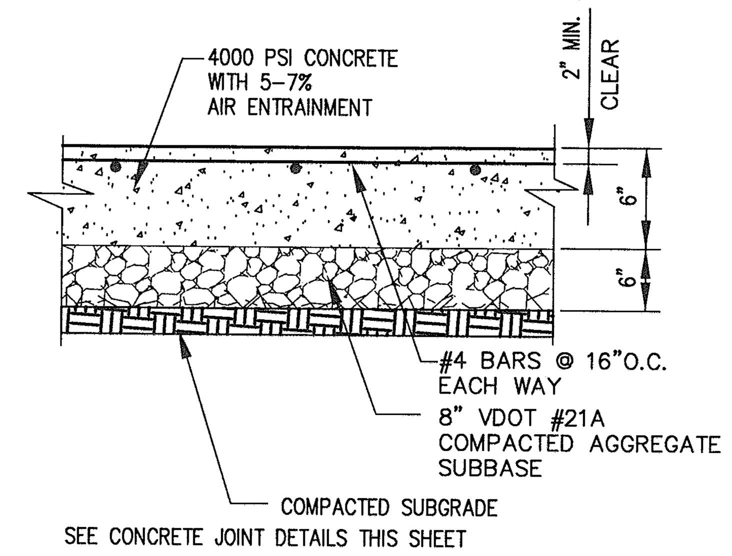

SEE CONCRETE JOINT DETAILS THIS SHEET

TYPICAL DUMPSTER PAD & HEAVY-DUTY CONCRETE PAVEMENT SECTION

NOT TO SCALE

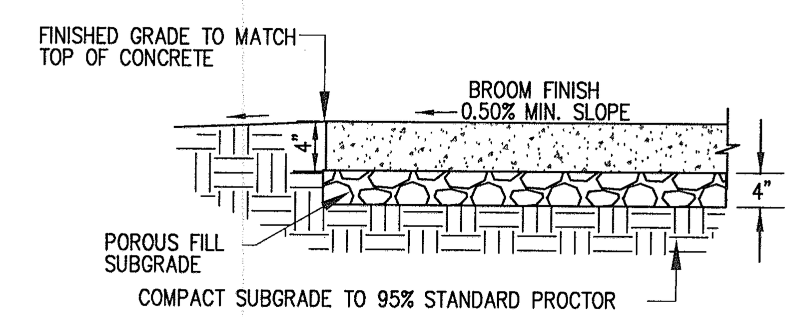

NOTE:
1. SCORED JOINTS AT 5'–0" MAX. SPACING; 1 3/8" MIN. DEPTH.
2. CONCRETE SHALL BE 3500 PSI WITH 5–7% AIR–ENTRAINED.

CONCRETE SIDEWALK /PAD SECTION /PAVER BASE

NOT TO SCALE

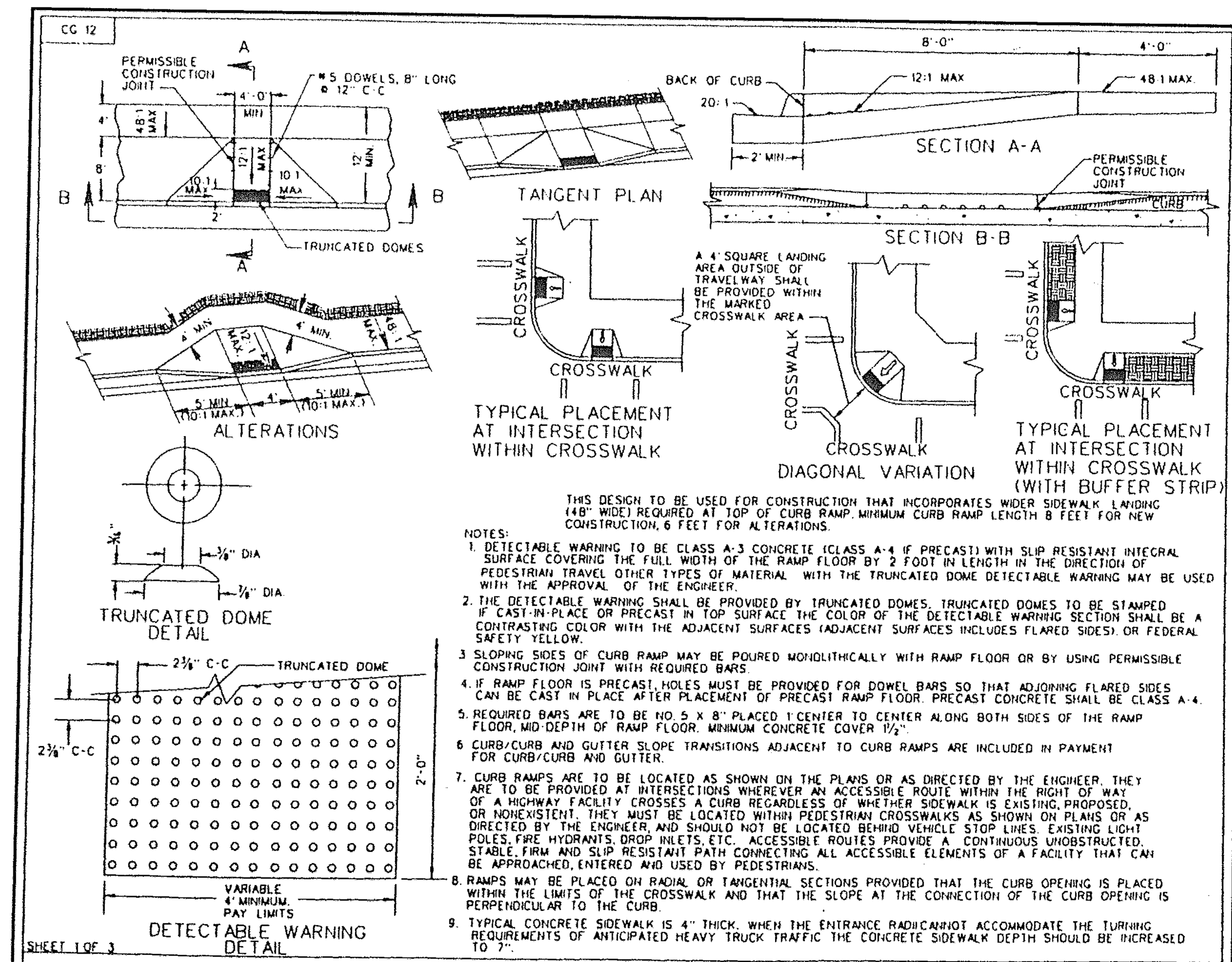

THIS DESIGN TO BE USED FOR CONSTRUCTION THAT INCORPORATES WIDER SIDEWALK LANDING (48" WIDE) REQUIRED AT TOP OF CURB RAMP. MINIMUM CURB RAMP LENGTH 8 FEET FOR NEW CONSTRUCTION, 6 FEET FOR ALTERATIONS.

NOTES:
1. DETECTABLE WARNING TO BE CLASS A-3 CONCRETE (CLASS A-4 IF PRECAST) WITH SLIP RESISTANT INTEGRAL SURFACE COVERING THE FULL WIDTH OF THE RAMP FLOOR BY 2 FOOT IN LENGTH IN THE DIRECTION OF PEDESTRIAN TRAVEL OTHER TYPES OF MATERIAL WITH THE TRUNCATED DOME DETECTABLE WARNING MAY BE USED WITH THE APPROVAL OF THE ENGINEER.
2. THE DETECTABLE WARNING SHALL BE PROVIDED BY TRUNCATED DOMES. TRUNCATED DOMES TO BE STAMPED IF CAST-IN-PLACE OR PRECAST IN TOP SURFACE. THE COLOR OF THE DETECTABLE WARNING SECTION SHALL BE A CONTRASTING COLOR WITH THE ADJACENT SURFACES (ADJACENT SURFACES INCLUDES FLARED SIDES), OR FEDERAL SAFETY YELLOW.
3. SLOPING SIDES OF CURB RAMP MAY BE POURED MONOLITHICALLY WITH RAMP FLOOR OR BY USING PERMISSIBLE CONSTRUCTION JOINT WITH REQUIRED BARS.
4. IF RAMP FLOOR IS PRECAST, HOLES MUST BE PROVIDED FOR DOWEL BARS SO THAT ADJOINING FLARED SIDES CAN BE CAST IN PLACE AFTER PLACEMENT OF PRECAST RAMP FLOOR. PRECAST CONCRETE SHALL BE CLASS A-4.
5. REQUIRED BARS ARE TO BE NO. 5 X 8" PLACED 1' CENTER TO CENTER ALONG BOTH SIDES OF THE RAMP FLOOR, MID-DEPTH OF RAMP FLOOR. MINIMUM CONCRETE COVER 1½".
6. CURB/CURB AND GUTTER SLOPE TRANSITIONS ADJACENT TO CURB RAMPS ARE INCLUDED IN PAYMENT FOR CURB/CURB AND GUTTER.
7. CURB RAMPS ARE TO BE LOCATED AS SHOWN ON THE PLANS OR AS DIRECTED BY THE ENGINEER. THEY ARE TO BE PROVIDED AT INTERSECTIONS WHEREVER AN ACCESSIBLE ROUTE WITHIN THE RIGHT OF WAY OF A HIGHWAY FACILITY CROSSES A CURB REGARDLESS OF WHETHER SIDEWALK IS EXISTING, PROPOSED, OR NONEXISTENT. THEY MUST BE LOCATED WITHIN PEDESTRIAN CROSSWALKS AS SHOWN ON PLANS OR AS DIRECTED BY THE ENGINEER, AND SHOULD NOT BE LOCATED BEHIND VEHICLE STOP LINES. EXISTING LIGHT POLES, FIRE HYDRANTS, DROP INLETS, ETC. ACCESSIBLE ROUTES PROVIDE A CONTINUOUS UNOBSTRUCTED, STABLE, FIRM AND SLIP RESISTANT PATH CONNECTING ALL ACCESSIBLE ELEMENTS OF A FACILITY THAT CAN BE APPROACHED, ENTERED AND USED BY PEDESTRIANS.
8. RAMPS MAY BE PLACED ON RADIAL OR TANGENTIAL SECTIONS PROVIDED THAT THE CURB OPENING IS PLACED WITHIN THE LIMITS OF THE CROSSWALK AND THAT THE SLOPE AT THE CONNECTION OF THE CURB OPENING IS PERPENDICULAR TO THE CURB.
9. TYPICAL CONCRETE SIDEWALK IS 4" THICK. WHEN THE ENTRANCE RADII CANNOT ACCOMMODATE THE TURNING REQUIREMENTS OF ANTICIPATED HEAVY TRUCK TRAFFIC THE CONCRETE SIDEWALK DEPTH SHOULD BE INCREASED TO 7".

SHEET 1 OF 3

CG-12 DETECTABLE WARNING SURFACE TYPE A (PERPENDICULAR) APPLICATION

VIRGINIA DEPARTMENT OF TRANSPORTATION

SPECIFICATION REFERENCE 105 502

REV. 1/04 203.05

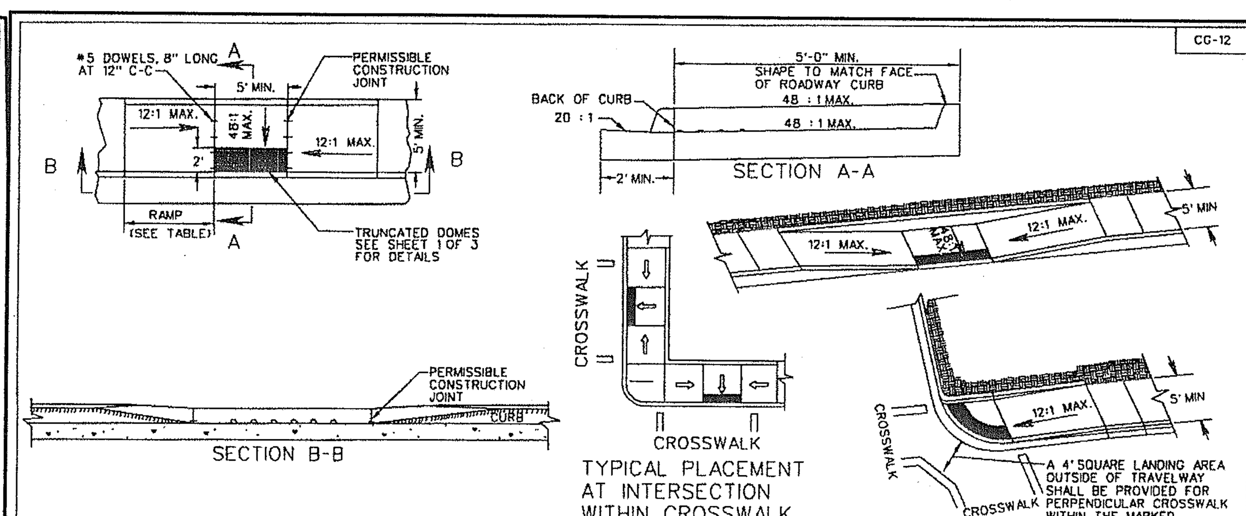

ROADWAY GRADE IN PERCENT	MINIMUM RAMP LENGTH IN FEET, 4" CURB HEIGTH	MINIMUM RAMP LENGTH IN FEET, 6" CURB HEIGTH
0	4	6
1	5	7
2	5	8
3	6	9
4	8	12
5	10	15
6	14	15

NOTES: THE REQUIRED LENGTH OF A PARALLEL RAMP IS LIMITED TO 15 FEET, REGARDLESS OF THE SLOPE.

NOTES:
1. DETECTABLE WARNING TO BE CLASS A-3 CONCRETE (CLASS A-4 IF PRECAST) WITH SLIP RESISTANT INTEGRAL SURFACE COVERING THE FULL WIDTH OF THE RAMP FLOOR BY 2 FOOT IN LENGTH IN THE DIRECTION OF PEDESTRIAN TRAVEL OTHER TYPES OF MATERIAL WITH THE TRUNCATED DOME DETECTABLE WARNING MAY BE USED WITH THE APPROVAL OF THE ENGINEER.
2. THE DETECTABLE WARNING SHALL BE PROVIDED BY TRUNCATED DOMES. TRUNCATED DOMES TO BE STAMPED IF CAST-IN-PLACE OR PRECAST IN TOP SURFACE. THE COLOR OF THE DETECTABLE WARNING SECTION SHALL BE A CONTRASTING COLOR WITH THE ADJACENT SURFACES (ADJACENT SURFACES INCLUDES FLARED SIDES), OR FEDERAL SAFETY YELLOW.
3. SLOPING SIDES OF CURB RAMP MAY BE POURED MONOLITHICALLY WITH RAMP FLOOR OR BY USING PERMISSIBLE CONSTRUCTION JOINT WITH REQUIRED BARS.
4. IF RAMP FLOOR IS PRECAST, HOLES MUST BE PROVIDED FOR DOWEL BARS SO THAT ADJOINING FLARED SIDES CAN BE CAST IN PLACE AFTER PLACEMENT OF PRECAST RAMP FLOOR. PRECAST CONCRETE SHALL BE CLASS A-4.
5. REQUIRED BARS ARE TO BE NO. 5 X 8" PLACED 1' CENTER TO CENTER ALONG BOTH SIDES OF THE RAMP FLOOR, MID-DEPTH OF RAMP FLOOR. MINIMUM CONCRETE COVER 1½".
6. CURB/CURB AND GUTTER SLOPE TRANSITIONS ADJACENT TO CURB RAMPS ARE INCLUDED IN PAYMENT FOR CURB/CURB AND GUTTER.
7. CURB RAMPS ARE TO BE LOCATED AS SHOWN ON THE PLANS OR AS DIRECTED BY THE ENGINEER. THEY ARE TO BE PROVIDED AT INTERSECTIONS WHEREVER AN ACCESSIBLE ROUTE WITHIN THE RIGHT OF WAY OF A HIGHWAY FACILITY CROSSES A CURB REGARDLESS OF WHETHER SIDEWALK IS EXISTING, PROPOSED, OR NONEXISTENT. THEY MUST BE LOCATED WITHIN PEDESTRIAN CROSSWALKS AS SHOWN ON PLANS OR AS DIRECTED BY THE ENGINEER, AND SHOULD NOT BE LOCATED BEHIND VEHICLE STOP LINES. EXISTING LIGHT POLES, FIRE HYDRANTS, DROP INLETS, ETC. ACCESSIBLE ROUTES PROVIDE A CONTINUOUS UNOBSTRUCTED, STABLE, FIRM AND SLIP RESISTANT PATH CONNECTING ALL ACCESSIBLE ELEMENTS OF A FACILITY THAT CAN BE APPROACHED, ENTERED AND USED BY PEDESTRIANS.
8. RAMPS MAY BE PLACED ON RADIAL OR TANGENTIAL SECTIONS PROVIDED THAT THE CURB OPENING IS PLACED WITHIN THE LIMITS OF THE CROSSWALK AND THAT THE SLOPE AT THE CONNECTION OF THE CURB OPENING IS PERPENDICULAR TO THE CURB.
9. TYPICAL CONCRETE SIDEWALK IS 4" THICK. WHEN THE ENTRANCE RADII CANNOT ACCOMMODATE THE TURNING REQUIREMENTS OF ANTICIPATED HEAVY TRUCK TRAFFIC THE CONCRETE SIDEWALK DEPTH SHOULD BE INCREASED TO 7".

SHEET 2 OF 3

SPECIFICATION REFERENCE 105 502

CG-12 DETECTABLE WARNING SURFACE TYPE B (PARALLEL) APPLICATION

VIRGINIA DEPARTMENT OF TRANSPORTATION

REV. 7/04 203.06

CG-6

NOTES:
1. THIS ITEM MAY BE PRECAST OR CAST IN PLACE.
2. CONCRETE TO BE CLASS A3 IF CAST IN PLACE, 4000 PSI IF PRECAST.
3. COMBINATION CURB & GUTTER HAVING A RADIUS OF 300 FEET OR LESS (ALONG FACE OF CURB) SHALL BE PAID FOR AS RADIAL COMBINATION CURB & GUTTER.
4. FOR USE WITH STABILIZED OPEN-GRADED DRAINAGE LAYER, THE BOTTOM OF THE CURB AND GUTTER SHALL BE CONSTRUCTED PARALLEL TO THE SLOPE OF SUBBASE COURSES AND TO THE DEPTH OF THE PAVEMENT.
5. THIS CURB MAY BE USED WHEN DESIGN SPEED IS 40 MPH OR LESS ON RURAL HIGHWAYS AND 45 MPH OR LESS IN DEVELOPED URBAN & SUBURBAN AREAS. IF THESE DESIGN SPEEDS ARE EXCEEDED STANDARD CG-7 IS REQUIRED.

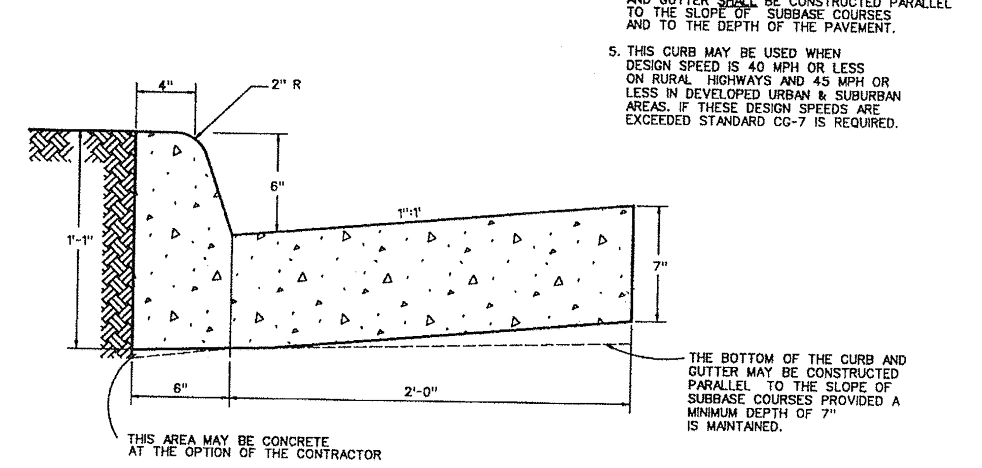

SPECIFICATION REFERENCE 105 502

COMBINATION 6" CURB & GUTTER

VIRGINIA DEPARTMENT OF TRANSPORTATION

201.03

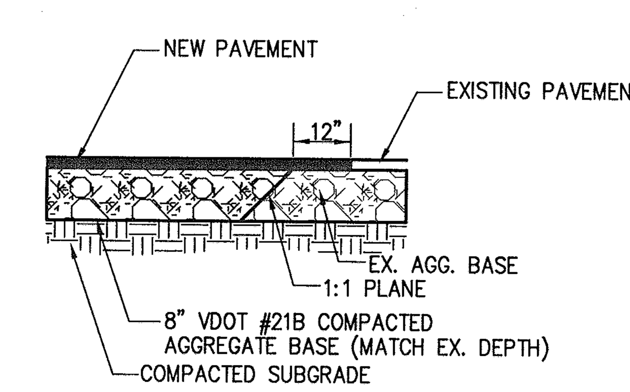

NEW & EXISTING PAVEMENT TRANSITION

NOT TO SCALE

ENGINEERS • ARCHITECTS • PLANNERS
DJG INC.
449 McLaws Circle, Williamsburg, VA 23185
Phone: 757.253.0673 Fax: 757.253.2319
Norfolk-Virginia Beach: 757.874.5015
www.djginc.com
COMMITTED TO EXCELLENCE

COMMONWEALTH OF VIRGINIA — DANIEL J. DE YOUNG No.3517 8-3-06 PROFESSIONAL ENGINEER

THIS DOCUMENT CONTAINS INFORMATION PROPRIETARY TO DJG, INC. AND IS FURNISHED IN CONFIDENCE AN AN INSTRUMENT OF SERVICE FOR THE LIMITED PURPOSE OF EVALUATION, BIDDING AND REVIEW, OR CONSTRUCTION OF A SPECIFIC PROJECT. REPRODUCTION OF THIS DOCUMENT, IN WHOLE OR IN PART, OR THE MODIFICATION OF ANY DETAIL OR DESIGN WITHOUT THE EXPRESSED, WRITTEN CONSENT OF DJG, INC. IS PROHIBITED. ALL RIGHTS RESERVED. COPYRIGHT (C) 2006.

REVISIONS

NO.	DATE	DESCRIPTION

CONSTRUCTION DETAILS #1

VIRGINIA DEPARTMENT OF TRANSPORTATION
NEW KENT SAFETY REST AREA AND INFORMATION CENTER
NEW KENT COUNTY, VIRGINIA

SCALE AS NOTED | DESIGNED MJG | DRAWN MES | CHECKED KMS | DATE 8/3/06

COMMISSION NUMBER 2070030

SHEET NUMBER C9

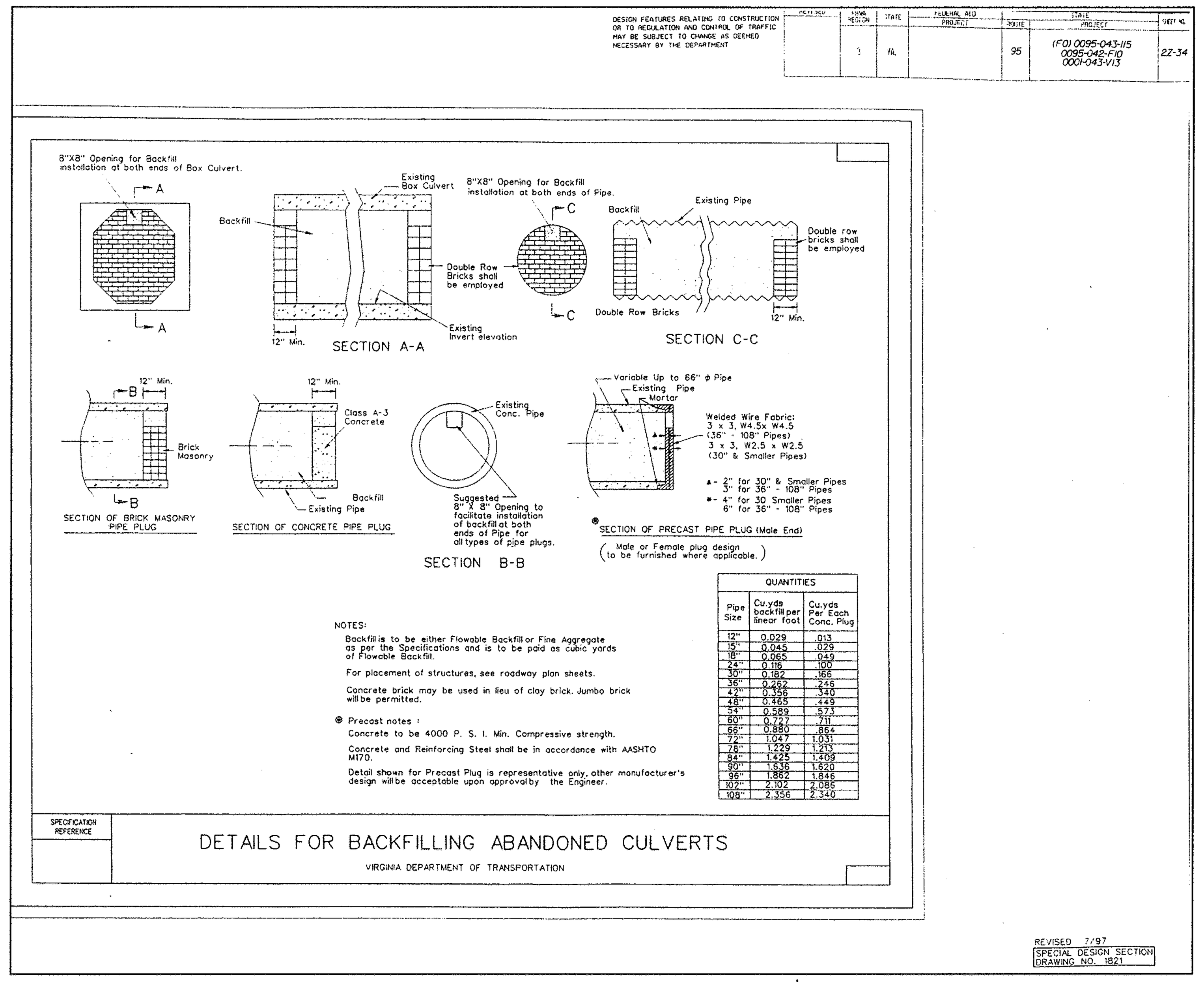

NOTES:

Backfill is to be either Flowable Backfill or Fine Aggregate as per the Specifications and is to be paid as cubic yards of Flowable Backfill.

For placement of structures, see roadway plan sheets.

Concrete brick may be used in lieu of clay brick. Jumbo brick will be permitted.

⊛ Precast notes :
Concrete to be 4000 P. S. I. Min. Compressive strength.
Concrete and Reinforcing Steel shall be in accordance with AASHTO M170.
Detail shown for Precast Plug is representative only, other manufacturer's design will be acceptable upon approval by the Engineer.

QUANTITIES		
Pipe Size	Cu.yds backfill per linear foot	Cu.yds Per Each Conc. Plug
12"	0.029	.013
15"	0.045	.029
18"	0.065	.049
24"	0.116	.100
30"	0.182	.166
36"	0.262	.246
42"	0.356	.340
48"	0.465	.449
54"	0.589	.573
60"	0.727	.711
66"	0.880	.864
72"	1.047	1.031
78"	1.229	1.213
84"	1.425	1.409
90"	1.636	1.620
96"	1.862	1.846
102"	2.102	2.086
108"	2.356	2.340

SPECIFICATION REFERENCE

DETAILS FOR BACKFILLING ABANDONED CULVERTS

VIRGINIA DEPARTMENT OF TRANSPORTATION

REVISED 7/97
SPECIAL DESIGN SECTION DRAWING NO. 1821

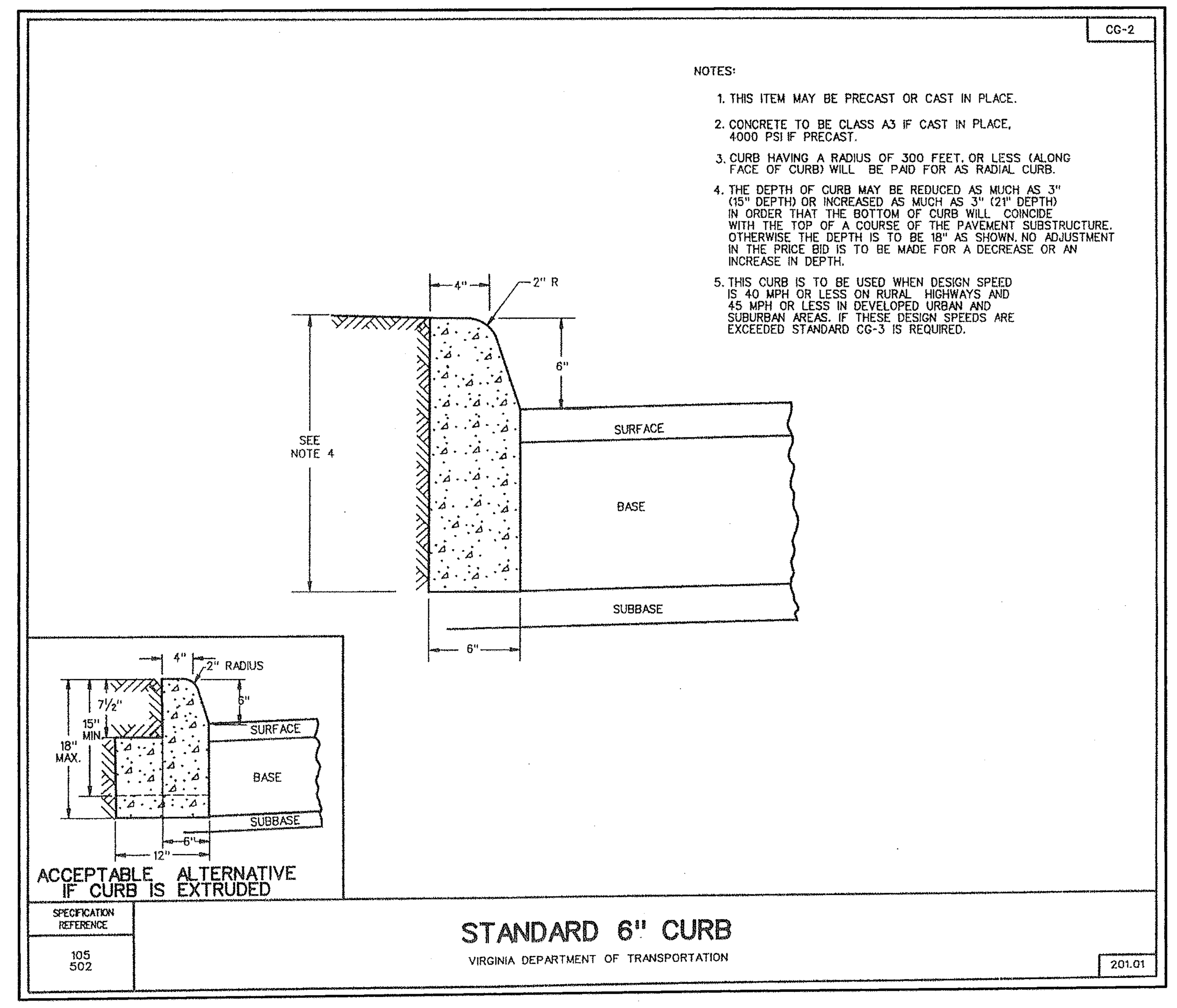

NOTES:
1. THIS ITEM MAY BE PRECAST OR CAST IN PLACE.
2. CONCRETE TO BE CLASS A3 IF CAST IN PLACE, 4000 PSI IF PRECAST.
3. CURB HAVING A RADIUS OF 300 FEET, OR LESS (ALONG FACE OF CURB) WILL BE PAID FOR AS RADIAL CURB.
4. THE DEPTH OF CURB MAY BE REDUCED AS MUCH AS 3" (15" DEPTH) OR INCREASED AS MUCH AS 3" (21" DEPTH) IN ORDER THAT THE BOTTOM OF CURB WILL COINCIDE WITH THE TOP OF A COURSE OF THE PAVEMENT SUBSTRUCTURE. OTHERWISE THE DEPTH IS TO BE 18" AS SHOWN. NO ADJUSTMENT IN THE PRICE BID IS TO BE MADE FOR A DECREASE OR AN INCREASE IN DEPTH.
5. THIS CURB IS TO BE USED WHEN DESIGN SPEED IS 40 MPH OR LESS ON RURAL HIGHWAYS AND 45 MPH OR LESS IN DEVELOPED URBAN AND SUBURBAN AREAS. IF THESE DESIGN SPEEDS ARE EXCEEDED STANDARD CG-3 IS REQUIRED.

SPECIFICATION REFERENCE 105 502

STANDARD 6" CURB

VIRGINIA DEPARTMENT OF TRANSPORTATION

201.01

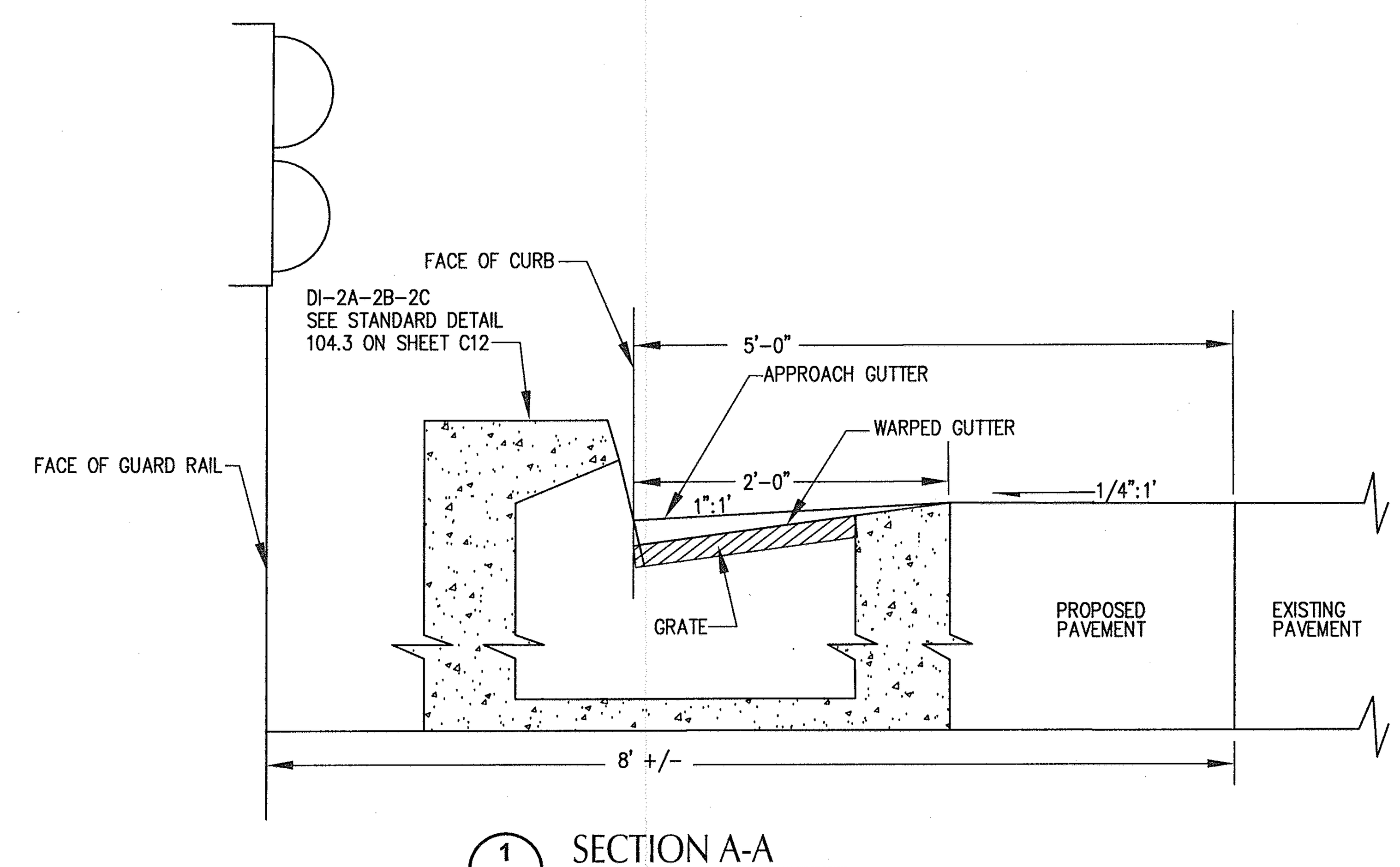

1 C3 C10 SECTION A-A
NOT TO SCALE

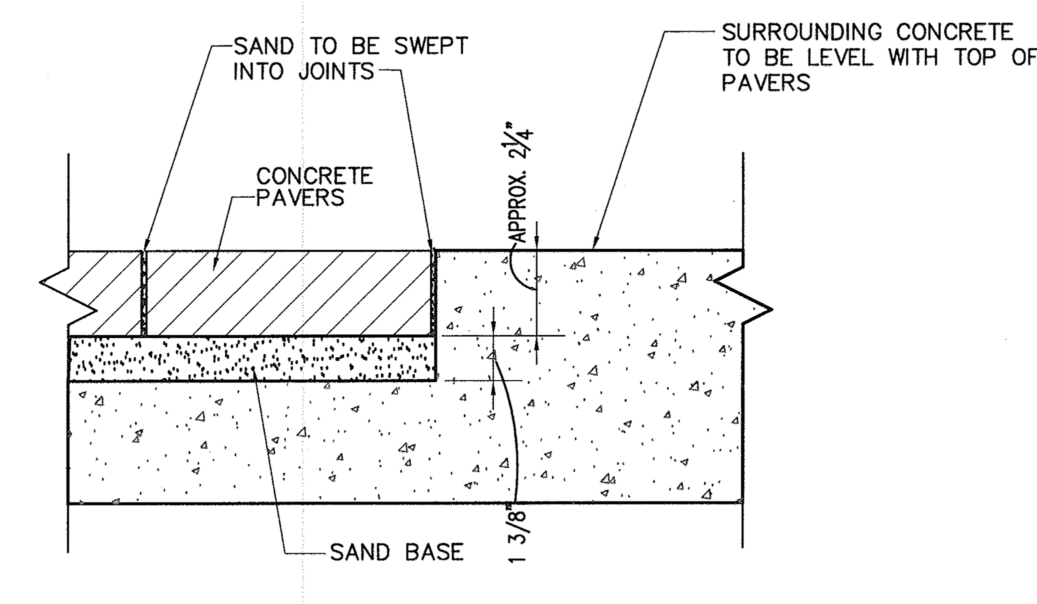

PAVER DETAIL
SCALE: NTS

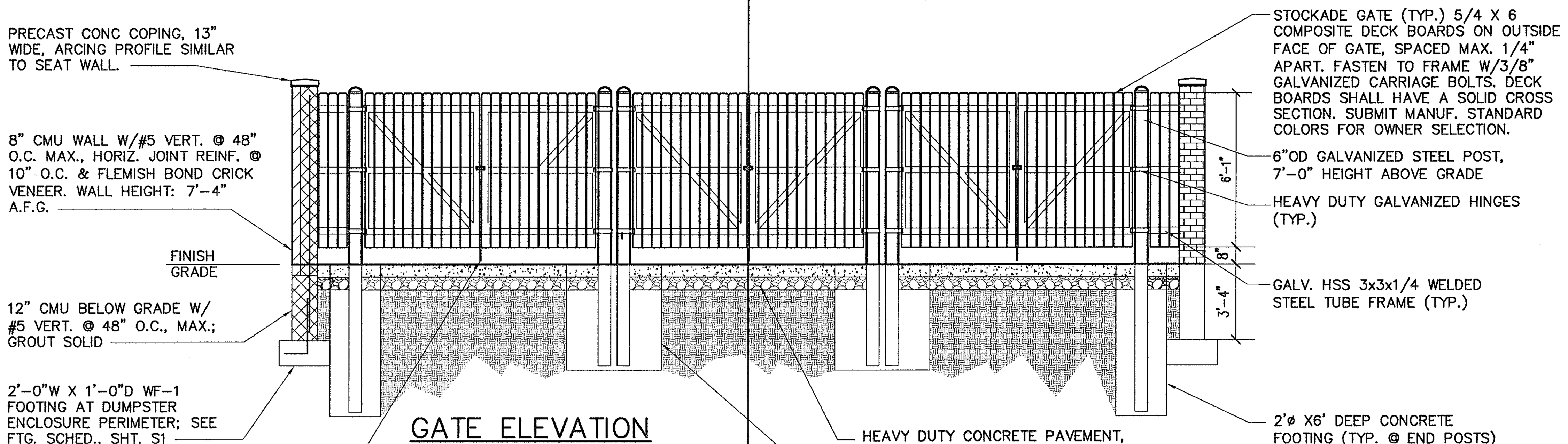

GATE ELEVATION

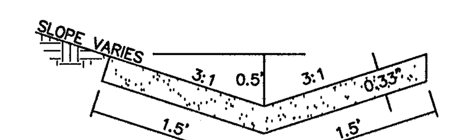

STD CONCRETE V-DITCH
NOT TO SCALE

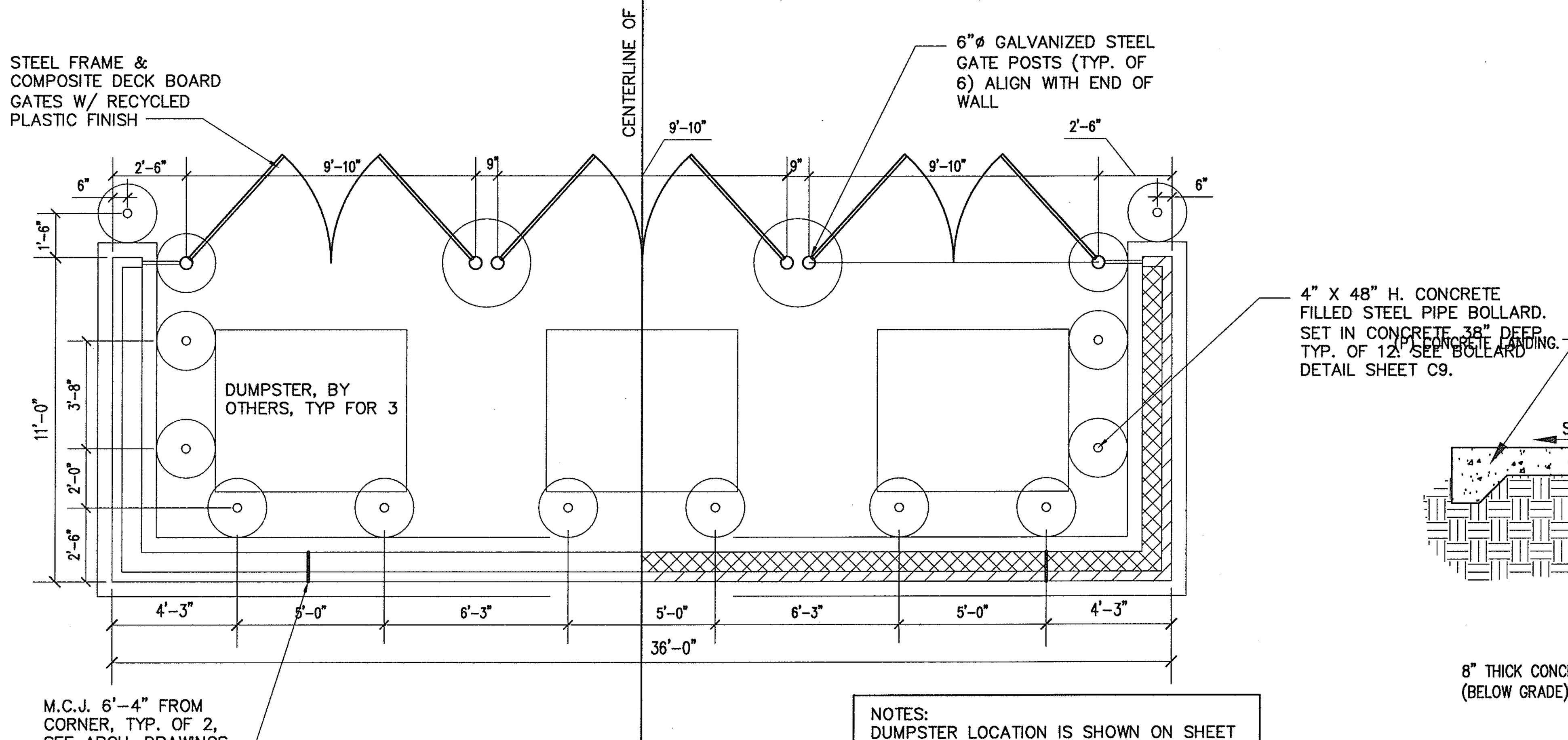

FLOOR PLAN

NOTES:
DUMPSTER LOCATION IS SHOWN ON SHEET C2 & C3. COORDINATE WITH SITE CONTRACTOR

SUBMIT GATE SHOP DRAWINGS– INDICATING DIMENSION AND CONNECTION INFORMATION

PROVIDE DOWELS & VERT REINF. AT 48" O.C. MAX. & WALL ENDS, CORNERS, & EACH SIDE OF CONTROL JOINTS.

HARDWARE FOR DUMPSTER PAD AND FENCE GATE (OR EQUAL):
* 2 CANE BOLTS X 18" GALVANIZED IRON "RICHARD WILCOX" #524 X 18" ZINC PLATED.
* 1 HASP #C935S – 3" EXTRA HEAVY DUTY, ZINC COATED – "LAWRENCE"
* 1 1/2 PAIR OF HINGES PER LEAF – "STANLEY #951 ZINC COATED 1½ x 16" STRAP, 3/4" x 6" HOOK, 3/8" CARRIAGE BOLTS AND NUTS

DUMPSTER ENCLOSURE
SCALE: 1/4"=1'-0"

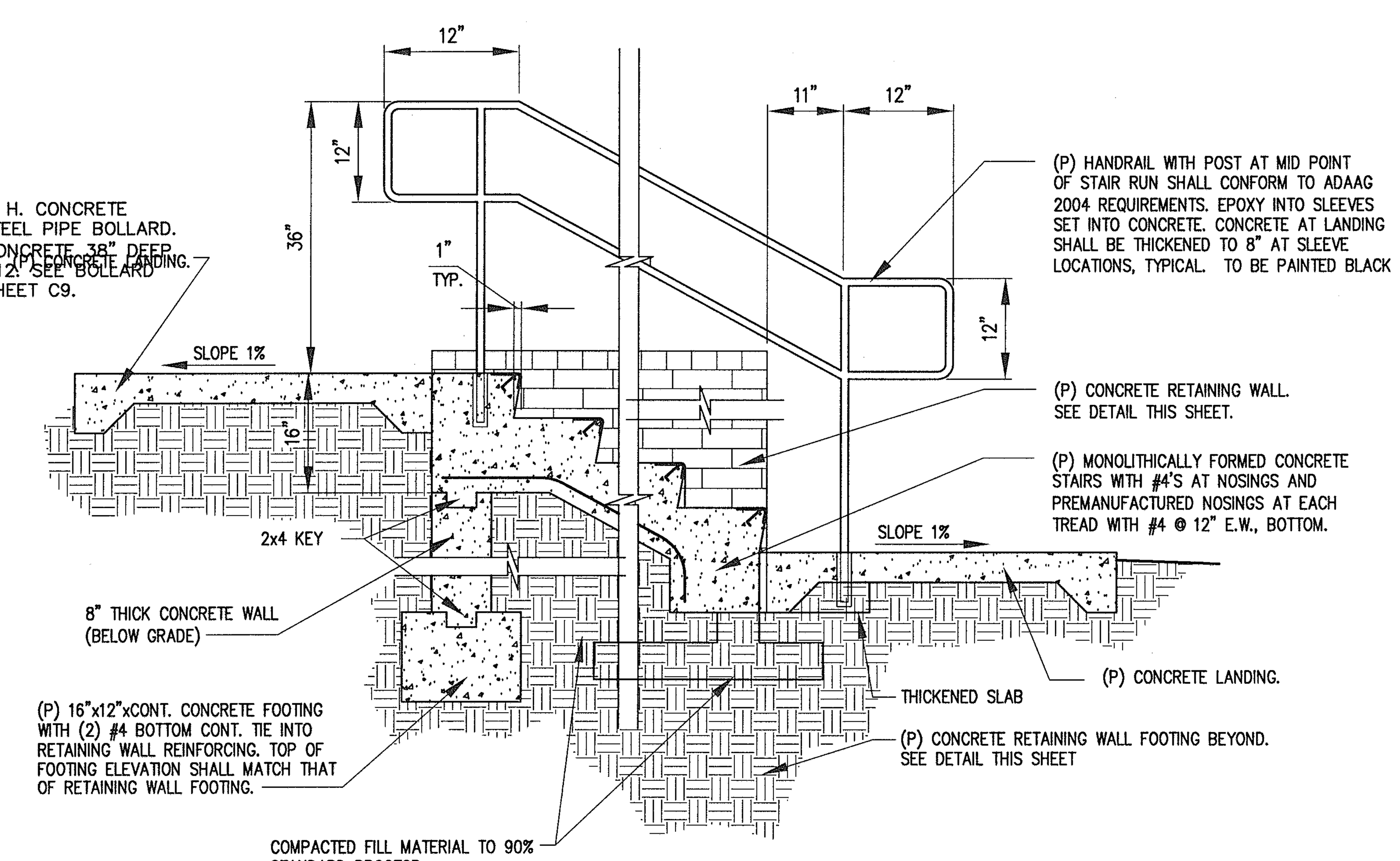

*ALL STAIRS TO BE CONSTRUCTED 6'–0" WIDE.
BUILD TREADS AS REQUIRED AT 0'–11".
BUILD RISERS AS REQUIRED AT 0'–7" MAX.

TYPICAL CONCRETE STAIRS W/ HANDRAILS
NOT TO SCALE

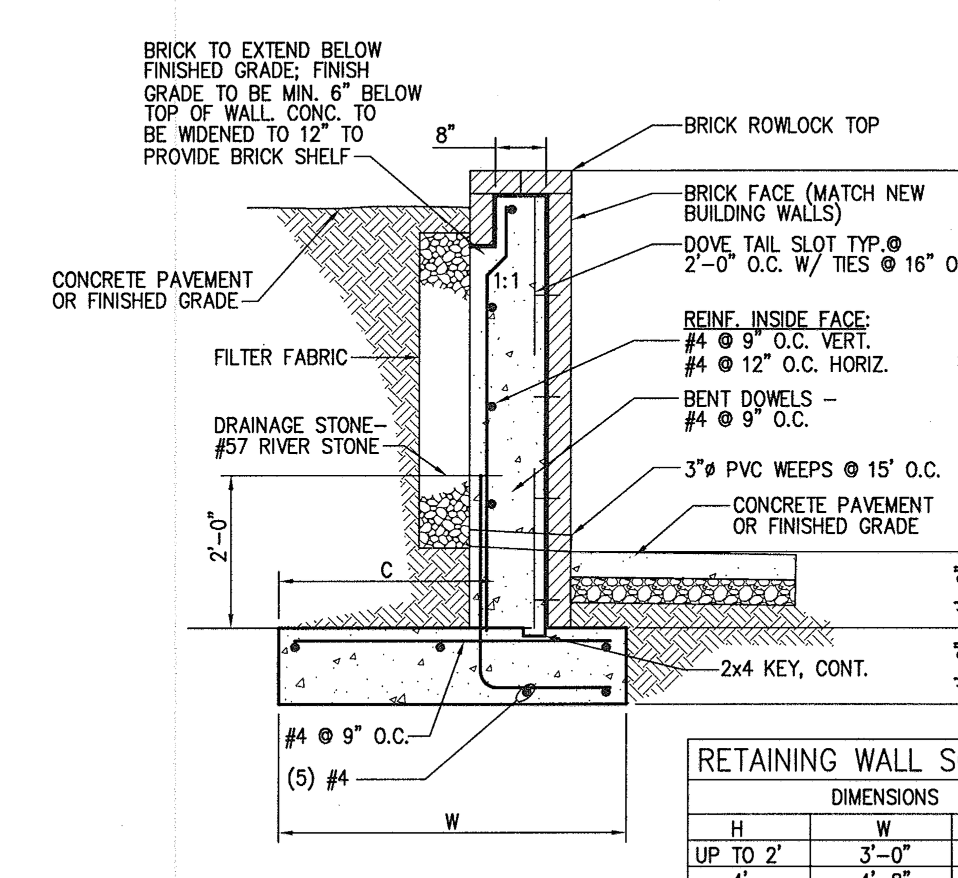

RETAINING WALL SCHEDULE		
DIMENSIONS		
H	W	C
UP TO 2'	3'-0"	1'-4"
4'	4'-8"	3'-0"
5'	6'-0"	3'-8"

RETAINING WALL SECTION
SCALE: 1/2"=1'-0"

ENGINEERS • ARCHITECTS • PLANNERS
DJG INC.
449 McLaws Circle, Williamsburg, VA 23185
Phone: 757.253.0673 Fax: 757.253.2319
Norfolk-Virginia Beach: 757.874.5015
www.djginc.com
COMMITTED TO EXCELLENCE

COMMONWEALTH OF VIRGINIA
DANIEL J. DE YOUNG
No.3517
8-3-06
PROFESSIONAL ENGINEER

THIS DOCUMENT CONTAINS INFORMATION PROPRIETARY TO DJG, INC. AND IS FURNISHED IN CONFIDENCE AN AN INSTRUMENT OF SERVICE FOR THE LIMITED PURPOSE OF EVALUATION, BIDDING AND REVIEW, OR CONSTRUCTION OF A SPECIFIC PROJECT. REPRODUCTION OF THIS DOCUMENT, IN WHOLE OR IN PART, OR THE MODIFICATION OF ANY DETAIL OR DESIGN WITHOUT THE EXPRESSED, WRITTEN CONSENT OF DJG, INC. IS PROHIBITED. ALL RIGHTS RESERVED. COPYRIGHT (C)2006.

REVISIONS		
NO.	DATE	DESCRIPTION

CONSTRUCTION DETAILS #2

VIRGINIA DEPARTMENT OF TRANSPORTATION
NEW KENT SAFETY REST AREA AND INFORMATION CENTER
NEW KENT COUNTY, VIRGINIA

SCALE	DESIGNED	DRAWN	CHECKED	DATE
AS NOTED	MJG	MES	KMS	8/3/06

COMMISSION NUMBER
2070030

SHEET NUMBER
C10

EROSION AND SEDIMENT CONTROL NARRATIVE

MINIMUM STANDARDS MUST BE ADDRESSED AND MAINTAINED AS NOTED IN THESE PLANS FOR THE DURATION OF THE PROJECT UNLESS OTHERWISE DIRECTED BY THE OWNER OR THE OWNER'S REPRESENTATIVE.

PROJECT DESCRIPTION THE PURPOSE OF THIS PROJECT IS FOR THE REDEVELOPMENT OF APPROXIMATELY A 14.00 ACRE SITE WITHIN A DEVELOPED SITE IN NEW KENT COUNTY, VIRGINIA. PROPOSED IMPROVEMENTS CONSIST OF A 1-STORY SAFETY REST AREA BUILDING, RESTRIPING THE CAR AND TRUCK PARKING LOTS, BIO-RETENTION AREA, PEDESTRIAN WALKWAYS, AND THE EXTENSION OF EXISTING SEWER, WATER, AND UTILITY SERVICES. THE PROPOSED AREA OF DISTURBANCE FOR THIS PROJECT IS APPROXIMATELY 4.0± ACRES AND POST-DEVELOPMENT IMPERVIOUS AREA WILL BE 3.48 AC. THE PROJECT IS SCHEDULED TO BEGIN IN SEPTEMBER 2006 WITH AN ANTICIPATED COMPLETION TIME OF MAY 2007.

EXISTING SITE CONDITIONS THE SITE POSSESSES MODERATELY SLOPING TOPOGRAPHY. THE TRUCK PARKING AREA DRAINS VIA SHEET FLOW OFF SITE. THE CAR PARKING AREA DRAINS TO A SWALE AND IS RELEASED OFF SITE. THE AREA BETWEEN THE PARKING LOTS IS LOW LYING AND DRAINS TO A SWALE RELEASING STORM WATER OFF SITE.

THE MAJORITY OF THE SITE IS DEVELOPED WITH SURROUNDING VEGETATION. MATURE OVERSTORY AND UNDERSTORY TREES COVER WHAT IS NOT DEVELOPED. EXISTING MATURE VEGETATION CONSISTS PRIMARILY OF NATIVE TREES. EXISTING VEGETATION IS TO BE PRESERVED TO THE MAXIMUM EXTENT POSSIBLE. VEGETATION OUTSIDE THE LIMITS OF DISTURBANCE WILL BE PRESERVED. INDIVIDUAL TREES TO BE PRESERVED WITHIN THE LIMITS OF DISTURBANCE ARE NOTED ON THE PLANS AND WILL BE MARKED IN THE FIELD WITH RED AND YELLOW FLAGGING. ADDITIONAL PROTECTION OF TREES SHALL BE IN ACCORDANCE WITH THE VIRGINIA EROSION AND SEDIMENTATION CONTROL HANDBOOK, 1992.

EXISTING TOPOGRAPHY IS SLOPING FROM SOUTH TO NORTH WITH SLOPES RANGING FROM 0 TO 33%. THERE ARE NO CRITICAL EROSION AREAS ON THIS SITE. SOIL EROSION AND SEDIMENTATION SHALL BE PREVENTED THROUGH A COMBINATION OF SILT FENCE, SEDIMENT TRAPS, AND DROP INLET AND CURB INLET PROTECTION PLACED ACCORDINGLY ALONG THE PERIMETER OF THE SITE.

ADJACENT AREAS THIS SITE IS LOCATED WITHIN THE VDOT RIGHT OF WAY TO THE NORTH, SOUTH, EAST, AND WEST. THE SITE IS BOUNDED ON THE NORTH BY RURAL NEW KENT COUNTY PROPERTY. AN EXISTING GROVE OF TREES AND A STEEP EMBANKMENT PROVIDES A NATURAL BUFFER TO THE SURROUNDING PROPERTIES, THUS THERE WILL BE NO CLEARING IN THIS AREA TO MAINTAIN THE BUFFER. SILT FENCE SHALL BE PLACED ALONG THE PERIMETER OF THE TRUCK PARKING, AND A TEMPORARY SEDIMENT TRAP SHALL BE BUILT IN ORDER TO PREVENT SEDIMENT FROM LEAVING THE SITE. CULVERT INLET PROTECTION SHALL BE INSTALLED FOR THE PREVENTION OF SEDIMENT LADEN WATER FROM ENTERING THE PROPOSED AND EXISTING STORMWATER COLLECTION SYSTEM.

OFF-SITE AREAS THERE ARE NO OFF-SITE AREAS PROPOSED FOR THIS PROJECT.

SOILS: SOIL INFORMATION FOR THIS AREA IS FROM THE GEOTECHNICAL REPORT PREPARED FOR THIS PROJECT. THE PREDOMINATE SOIL TYPES FOUND ARE COMPOSED OF SURFICIAL ORGANIC SOIL. THE SITE IS MAINLY COMPRISED OF FILL. THE FILL IS DESCRIBED AS SILTY SAND (SM), SANDY CLAY (SC), AND CLAYEY SAND (SC). THIS SOIL TYPE EXHIBITS MODERATE PERMEABILITY, AND MEDIUM SURFACE RUNOFF. VEGETATION DOES WELL IN THIS SOIL, ESPECIALLY WITH LIME AND FERTILIZER TREATMENTS.

CRITICAL AREAS THERE ARE NO CRITICAL AREAS ON THIS SITE.

EROSION AND SEDIMENT CONTROL MEASURES UNLESS OTHERWISE INDICATED, ALL VEGETATIVE AND STRUCTURAL EROSION AND SEDIMENT CONTROL PRACTICES WILL BE CONSTRUCTED AND MAINTAINED ACCORDING TO MINIMUM STANDARDS AND SPECIFICATIONS OF THE VIRGINIA EROSION AND SEDIMENT CONTROL HANDBOOK 1992.

STRUCTURAL PRACTICES:

SILT FENCE (3.05): SILT FENCE WILL BE INSTALLED AT THE LIMITS OF CLEARING AND GRADING IN ORDER TO INTERCEPT AND DETAIN SMALL AMOUNTS OF SEDIMENT FROM DISTURBED AREAS DURING CONSTRUCTION OPERATIONS AND TO PREVENT SEDIMENT FROM LEAVING THE SITE. SILT FENCE SHALL ALSO BE INSTALLED AT THE PERIMETER OF THE SITE.

STORM DRAIN INLET PROTECTION (3.07): INLET PROTECTION (INCLUDING DROP INLET AND CURB INLET PROTECTION) WILL BE PROVIDED FOR ALL EXISTING AND PROPOSED STORM DRAIN INLETS IN ORDER TO PREVENT SEDIMENTS FROM MIGRATING OFF-SITE AND ACCUMULATING WITHIN THE DRAIN SYSTEM.

TREE PROTECTION (3.38): TREE PROTECTION WILL BE PROVIDED ALONG THE LIMITS OF CLEARING AND GRADING, AS WELL AS FOR INDIVIDUAL TREES ON THE SITE IN ORDER TO HELP RETAIN SOILS ONSITE AND IN ORDER TO MAXIMIZE TREE CANOPY. TREE PROTECTION IS DELINEATED ON THE PLANS, AS WELL AS ON THE SITE. TREES TO BE PRESERVED SHALL BE INDICATED BY RED AND YELLOW SURVEY TAPE.

TEMPORARY SEDIMENT TRAP (3.13): TWO TEMPORARY SEDIMENT TRAPS WILL BE PROVIDED AT BOTH ENDS OF THE SITE IN ORDER TO HELP RETAIN SOILS ONSITE. DETAILS OF THE PROPOSED TEMPORARY SEDIMENT TRAP ARE DELINEATED ON THE PLANS.

VEGETATIVE PRACTICES: PERMANENT AND TEMPORARY SEEDING ACTIVITIES OF DENUDED AREAS WILL BE IN ACCORDANCE WITH THE MINIMUM STANDARDS OF THE CURRENT VIRGINIA EROSION AND SEDIMENTATION CONTROL HANDBOOK.

TEMPORARY SEEDING (3:31): ALL DISTURBED AREAS ARE TO BE STABILIZED BY SEEDING AND MULCHING AS SOON AS GRADING IS COMPLETED. REFER TO VESCH SECTION 3.31 FOR APPROPRIATE STANDARDS AND CRITERIA.

PERMANENT STABILIZATION

PERMANENT OR TEMPORARY SOIL STABILIZATION SHALL BE APPLIED TO DENUDED AREAS WITHIN SEVEN (7) DAYS AFTER FINAL GRADE IS REACHED ON ANY PORTION OF THE SITE. TEMPORARY SOIL STABILIZATION SHALL BE APPLIED WITHIN SEVEN (7) DAYS TO DENUDED AREAS THAT MAY NOT BE AT FINAL GRADE BUT WILL REMAIN DORMANT (UNDISTURBED) FOR LONGER THAN 30 DAYS. PERMANENT STABILIZATION SHALL BE APPLIED TO AREAS THAT ARE TO BE LEFT DORMANT FOR MORE THAN ONE (1) YEAR. FINAL STABILIZATION SHALL BE INSPECTED BY THE BASE EROSION CONTROL OFFICER OR REPRESENTATIVE. TOPSOIL TO BE USED ON SITE SHALL BE INSPECTED AS REQUIRED IN VESCH 3.30. % PURE LIVE SEED SHALL BE FESCUE (KY 31) WITH A MINIMUM OF 89 SEED, APPLIED AT A RATE OF 200 LBS/ACRE. FERTILIZER WILL BE OF A CONTROLLED RELEASE COMMERCIAL GRADE APPLIED BY HARD OR IN HYDROSEED MIX. LIMING MATERIAL WILL BE USED AS NECESSARY TO RAISE PH LEVELS OF THE TOPSOIL TO A POINT FAVORABLE TO THE SEED SPECIFIED. AREAS NOT TO BE SEEDED WILL BE STABILIZED WITH CONCRETE OR ASPHALT AS INDICATED WITHIN THE CONSTRUCTION DOCUMENTS.

STORMWATER RUNOFF CONSIDERATIONS

EXISTING PIPE ADEQUACY HAS BEEN TAKEN INTO CONSIDERATION AND FOUND TO BE ADEQUATE FOR THE 2 YEAR DESIGN STORM AS REQUIRED BY THE VIRGINIA EROSION AND SEDIMENTATION CONTROL HANDBOOK. WATER QUALITY CALCULATIONS SHOW THAT MORE POLLUTANTS ARE BEING REMOVED AFTER POST RE-DEVELOPMENT. THE AMOUNT OF UNTREATED RUNOFF WATER LEAVING THE SITE HAS BEEN GREATLY REDUCED BY ADDITION OF A BIORETENTION AREA TO TREAT SURFACE RUNOFF (SEE SHEETS C2, C4, C12 & C19).

MAINTENANCE:

ALL EROSION AND SEDIMENT CONTROL MEASURES WILL BE CHECKED AFTER EACH SIGNIFICANT RAINFALL EVENT, OR A MINIMUM OF ONCE EVERY TWO WEEK PERIOD. FURTHER, ALL MEASURES SHALL BE INSPECTED, AND REPAIRED/PREPARED IF NECESSARY, PRIOR TO FORECASTED LARGE STORM EVENTS. THE FOLLOWING ITEMS WILL BE CHECKED IN PARTICULAR: * THE SILT FENCE AND INLET PROTECTION CONTROLS WILL BE CHECKED REGULARLY FOR UNDERMINING OR DETERIORATION OF THE FABRIC. SEDIMENT SHALL BE REMOVED WHEN THE LEVEL OF SEDIMENT DEPOSITION REACHES HALFWAY TO THE TOP OF THE BARRIER. THE CONTRACTOR IS RESPONSIBLE TO ADHERE TO ALL MAINTENANCE REQUIREMENTS OF THE EROSION AND SEDIMENT CONTROL MEASURES AS OUTLINED IN VIRGINIA EROSION AND SEDIMENT CONTROL HANDBOOK, 1992. * SEEDED AREAS WILL BE CHECKED REGULARLY TO ENSURE THAT A UNIFORM STAND IS MAINTAINED. AREA SHOULD BE FERTILIZED AND RESEEDED AS NEEDED.

MANAGEMENT STRATEGIES AND SEQUENCE OF CONSTRUCTION

ALL EROSION AND SEDIMENT CONTROL MEASURES SHALL BE INSTALLED PRIOR TO ANY LAND DISTURBING ACTIVITY. THE JOB SUPERINTENDENT SHALL BE RESPONSIBLE FOR THE INSTALLATION AND MAINTENANCE OF THESE MEASURES. THE CONTRACTOR MUST HAVE AN APPROVED EROSION AND SEDIMENT CONTROL PLAN PRIOR TO LAND DISTURBING ACTIVITIES, AND HAULING EXCESS DEBRIS, WASTE, OR SOIL MATERIAL TO ANY OFFSITE DISPOSAL AREA(S). NO EROSION AND SEDIMENT CONTROL MEASURES SHALL BE REMOVED UNTIL STABILIZATION, AS DETERMINED BY NEW KENT COUNTY EROSION AND SEDIMENT CONTROL INSPECTOR OR REPRESENTATIVE, HAS BEEN ACHIEVED.

DURING CONSTRUCTION, THE POINT OF CONTACT AND THE OWNER'S REPRESENTATIVE SHALL BE IMMEDIATELY NOTIFIED OF ANY ISSUES CONCERNING FAILING EROSION CONTROLS OR THOSE AT RISK OF IMMINENT FAILURE.

SEDIMENT TRAP CALCULATIONS

SEDIMENT TRAP #1 CALCULATIONS:
TOTAL STORAGE VOLUME REQUIRED: 3,294 CF
TOTAL STORAGE VOLUME PROVIDED: 3,750 CF
WET STORAGE VOLUME: 1,700 CF
STONE OUTLET BASE ELEVATION: 62 (EXISTING GROUND)
STONE OUTLET CREST ELEVATION: 64.50
STONE OUTLET STRUCTURE LENGTH: 6'
BOTTOM DIMENSION AT ELEVATION 59.5: 15' X 35'
OUTLET HEIGHT: 64.0
TOP WIDTH: 2.5

SEDIMENT TRAP #2 CALCULATIONS:
TOTAL STORAGE VOLUME REQUIRED: 10,854 CF
TOTAL STORAGE VOLUME PROVIDED: 11,797.5 CF
WET STORAGE VOLUME: 6,247.5 CF
STONE OUTLET BASE ELEVATION: 42 (EXISTING GROUND)
STONE OUTLET CREST ELEVATION: 45.0
STONE OUTLET STRUCTURE LENGTH: 18'
BOTTOM DIMENSION AT ELEVATION 39: 29' X 64'
OUTLET HEIGHT: 44.0
TOP WIDTH: 2.5

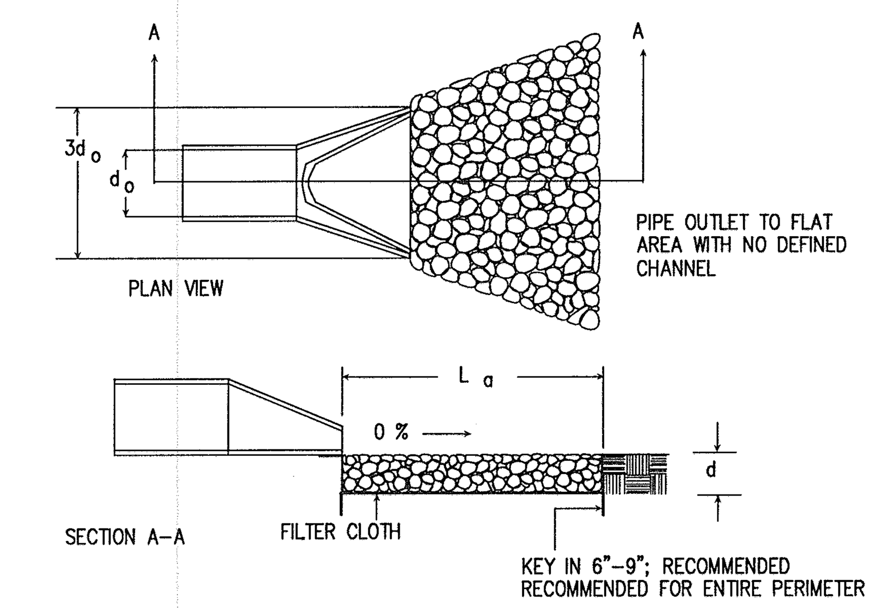

NOTES:
1. APRON LINING MAY BE RIPRAP, GROUTED RIPRAP, GABION BASKET, OR CONCRETE.
2. SLOPE OF OUTLET PROTECTION SHALL BE 0%.

KEY	
(C4-5)	(C4-9)
L_a=14'	L_a=13'
d=15"min	d=12"min
d_o=24"	d_o=18"

(OP) OUTLET PROTECTION DETAILS AND NOTES

NOT TO SCALE

Source: Va. DSWC — Plate 3.18-1

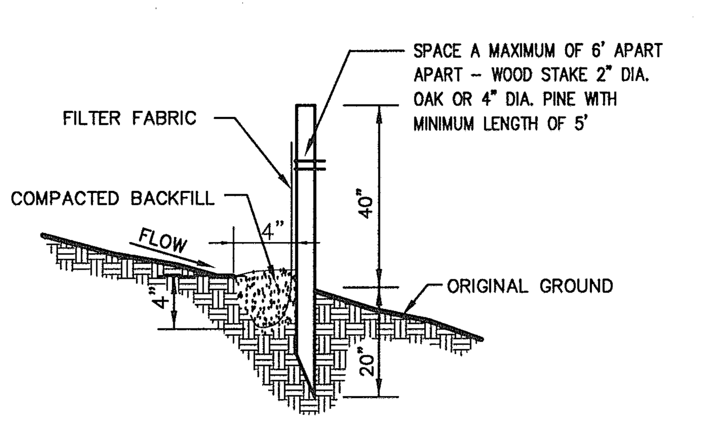

(SF) SILT FENCE VESCH 3.05

NOT TO SCALE

SOURCE: VA. DSWC — PLATE. 3.05-2

GRAVEL CURB INLET SEDIMENT FILTER

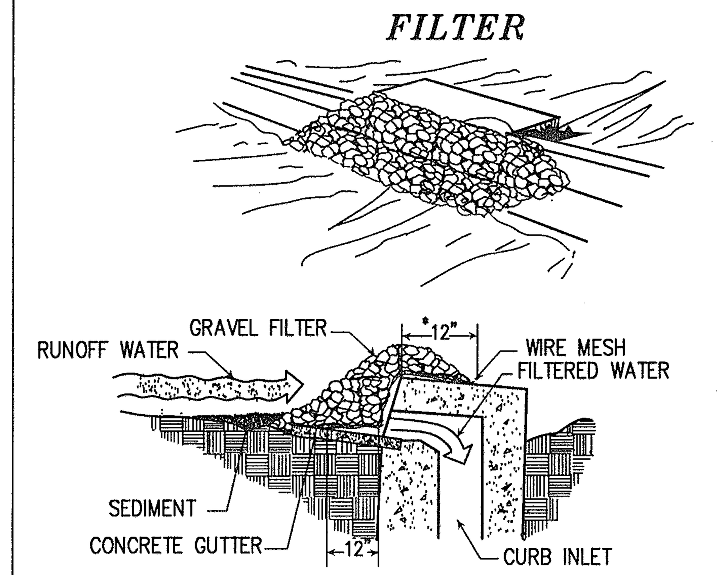

SPECIFIC APPLICATION

THIS METHOD OF INLET PROTECTION IS APPLICABLE AT CURB INLETS WHERE PONDING IN FRONT OF THE STRUCTURE IS NOT LIKELY TO CAUSE INCONVENIENCE OR DAMAGE TO ADJACENT STRUCTURES AND UNPROTECTED AREAS.

* GRAVEL SHALL BE VDOT #3, #357 OR 5 COARSE AGGREGATE.

(IP) DROP INLETPROTECTION VESCH 3.07

NOT TO SCALE

SOURCE: VA. DSWC — PLATE 3.07-6

TEMPORARY SEDIMENT TRAP

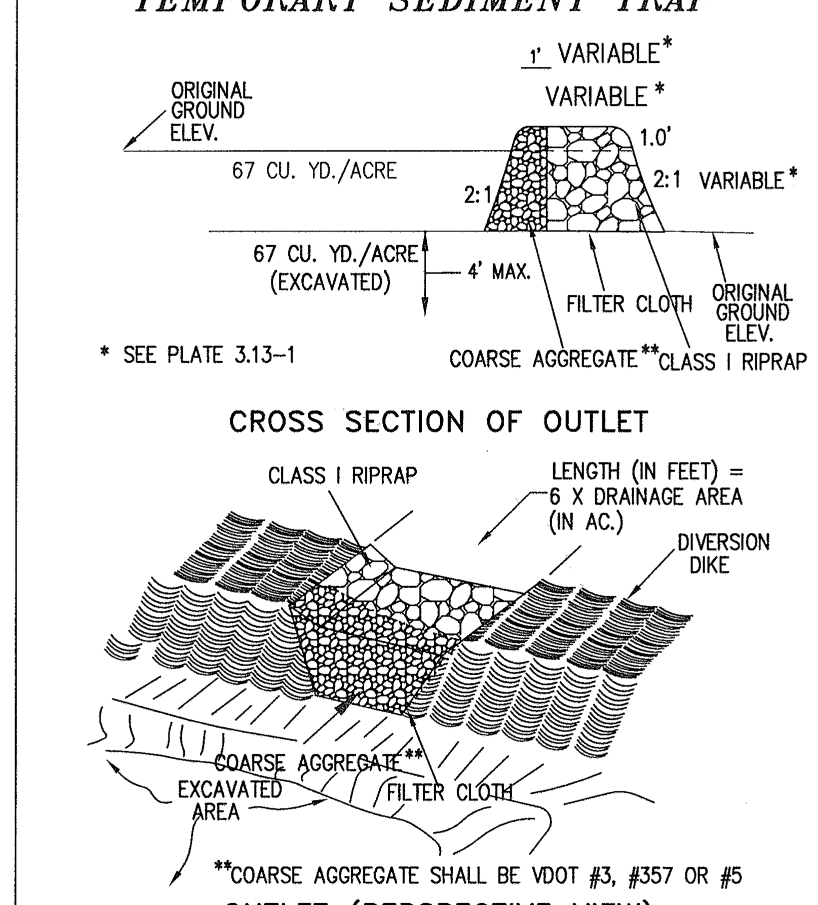

(ST) SEDIMENT TRAPVESCH 3.13

NOT TO SCALE

Source: Va. DSWC — Plate 3.13-2

FENCING AND ARMORING

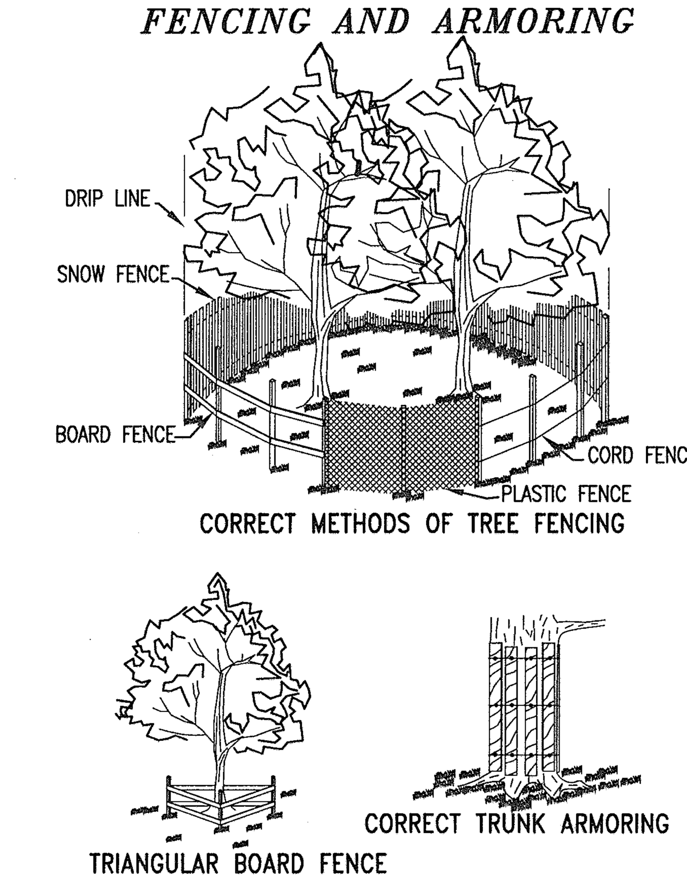

(TP) TREE PROTECTION VESCH 3.38

Source: Va. DSCW — Plate 3.38-2

ENGINEERS • ARCHITECTS • PLANNERS
DJG INC.
449 McLaws Circle, Williamsburg, VA 23185
Phone: 757.253.0673 Fax: 757.253.2319
Norfolk-Virginia Beach: 757.874.5015
www.djginc.com
COMMITTED TO EXCELLENCE

COMMONWEALTH OF VIRGINIA — DANIEL J. DE YOUNG — No.3517 — 8-3-06 — PROFESSIONAL ENGINEER

THIS DOCUMENT CONTAINS INFORMATION PROPRIETARY TO DJG, INC. AND IS FURNISHED IN CONFIDENCE AN AN INSTRUMENT OF SERVICE FOR THE LIMITED PURPOSE OF EVALUATION, BIDDING AND REVIEW, OR CONSTRUCTION OF A SPECIFIC PROJECT. REPRODUCTION OF THIS DOCUMENT, IN WHOLE OR IN PART, OR THE MODIFICATION OF ANY DETAIL OR DESIGN WITHOUT THE EXPRESSED WRITTEN CONSENT OF DJG, INC. IS PROHIBITED. ALL RIGHTS RESERVED. COPYRIGHT (C)2006.

REVISIONS		
NO.	DATE	DESCRIPTION

EROSION & SEDIMENT CONTROL NOTES & DETAILS

VIRGINIA DEPARTMENT OF TRANSPORTATION
NEW KENT SAFETY REST AREA AND INFORMATION CENTER
NEW KENT COUNTY, VIRGINIA

SCALE	DESIGNED	DRAWN	CHECKED	DATE
AS NOTED	MJG	MES	KMS	8/3/06

COMMISSION NUMBER
2070030

SHEET NUMBER
C11

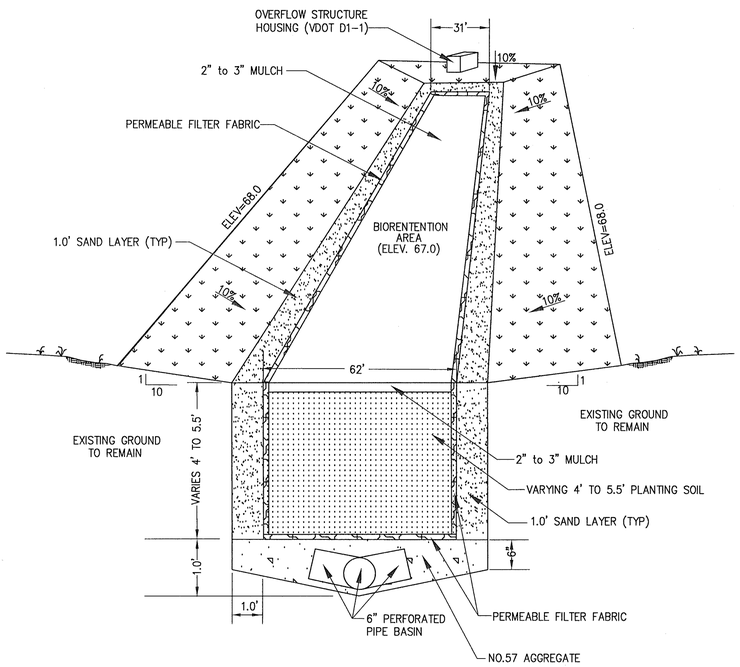

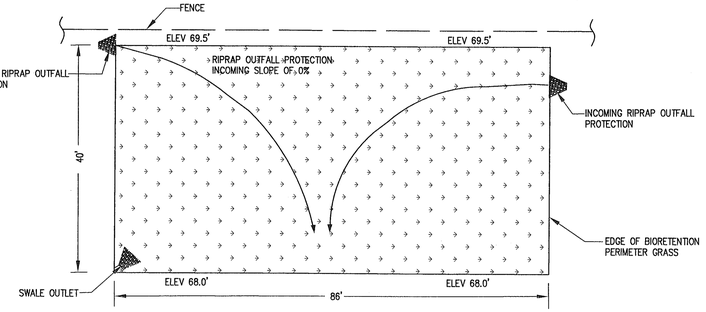

VEGETATIVE FILTER STRIP DETAILS:
VEGETATIVE FILTER AREA: APPROX: 40'L x 86'W
SLOPE ENTERING FILTER AREA: 2%
SLOPE: 3.75% (BEGIN AT 69.5 END 68.0)
VEGETATIVE FILTER AREA TOP SOIL DEPTH: 12"

TOP SOIL REQUIREMENTS:
pH 5.0 – 7.0
ORGANIC MATTER > 1.5
MAGNESIUM (Mg) 100+ UNITS
PHOSPHORUS (P_2O_5) 150+ UNITS
SOLUBLE SALTS < 900 ppm

VEGETATIVE FILTER CONSTRUCTION NOTES:
1) CONTRACTOR SHALL NOT BEGIN CONSTRUCTION OF VEGETATIVE FILTER UNTIL THE ENTIRE SITE IS STABILIZED AND APPROVED BY OWNER REPRESENTATIVE.
2) FINISHED GRADE SHALL BE TILLED TO A DEPTH OF 4" BEFORE APPLICATION OF TOP SOIL.
3) TOPSOIL SHALL BE MINIMUM DEPTH OF 12" IN VEGETATIVE FILTER AREA.
4) VEGETATION SELECTION MUST BE NATIVE TO THE NEW KENT COUNTY AREA, SUITED FOR USDA PLANT HARDINESS ZONES 6 OR 7, APPROVED BY OWNER REPRESENTATIVE, AND SHALL BE A AT LEAST TWO OF THE FOLLOWING:
a) DEEP-ROOTED GRASSES, GROUND COVERS, OR VINES
b) DECIDUOUS AND EVERGREEN SHRUBS
c) UNDER- AND OVER-STORY TREES
5) CONTRACTOR MAY REUSE ON-SITE TOPSOIL, IF PROPERLY STORED AND CONTRACTOR CAN DEMONSTRATE THAT TOP SOIL MEETS STATED REQUIREMENTS.

VEGETATIVE FILTER AREA DETAILS AND NOTES

NOT TO SCALE

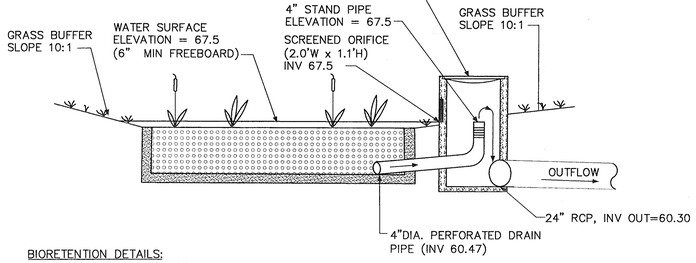

BIORETENTION DETAILS:
BIORETENTION AREA: 5760 SF
BIORETENTION SOIL DEPTH: 4'
BUFFER STRIP LENGTH: 10'
BIORETENTION ELEV: 67'
ORIFICE ELEV: 67.50'
OVERLOW RIM ELEV: 69'
SAND WALL WIDTH: 1' AROUND PERIMETER OF BIORETENTION AREA
NO. OF STEMS IN BIORETENTION AREA: 96
NO. OF TREES IN BIORETENTION AREA: 19
NO. OF SHRUBS IN BIORETENTION AREA: 41
POLLUTANT LOAD ENTERING: ~7.54 lb/year
POLLUTANT LOAD REMOVED: ~3.77 lb/year

BIORETENTION PLANTING SOIL DETAILS:
50% SAND
30% FULLY COMPOSTED LEAF
20% TOP SOIL

TOP SOIL REQUIREMENTS:
pH 5.0 – 7.0
ORGANIC MATTER > 1.5
MAGNESIUM (Mg) 100+ UNITS
PHOSPHORUS (P_2O_5) 150+ UNITS
SOLUBLE SALTS < 900 ppm

BIORETENTION CONSTRUCTION NOTES:

CONTRACTOR SHALL NOT BEGIN CONSTRUCTION OF BIORETENTION BASIN UNTIL THE ENTIRE SITE IS STABILIZED AND APPROVED BY OWNER REPRESENTATIVE.

1) CONTRACTOR SHALL INSTALL PERMEABLE FILTER FABRIC BETWEEN BIORETENTION SOIL AND SAND LAYERS.
2) PLANTING SOIL SHALL BE PLACED IN LIFTS LESS THAN 18" AND LIGHTLY COMPACTED USING HAND OPERATED ROLLER.
3) SAND SHALL BE ASTM C-33 CONCRETE SAND AND FREE OF DELETERIOUS AND FOREIGN MATERIAL.
4) CONTRACTOR SHALL PROVIDE 2-3" MULCH BED AROUND ALL VEGETATION IN BIORETENTION BED. MULCH SHALL BE EITHER STANDARD LANDSCAPE FINE SHREDDED HARDWOOD MULCH OR SHREDDED HARDWOOD CHIPS.
5) CONTRACTOR SHALL SUBMIT TEST VERIFYING pH AND ORGANIC MATTER CONTENT OF TOP SOIL. CONTRACTOR SHALL USE SAME GRADE AND SOURCE OF TOP SOIL FOR ENTIRE BASIN.
6) CONTRACTOR SHALL SUBMIT TEST VERIFYING MAGNESIUM, PHOSPORUS, POTASSIUM, AND SOLUBLE SALTS CONTENT OF TOP SOIL.
7) BIORETENTION AREA WALLS SHALL BE DUG VERTICAL. ONCE WALLS HAVE BEEN DUG, CONTRACTOR MUST PROVIDE SILT FENCE AROUND PERIMETER OF WALLS. SILT FENCE TO REMAIN UNTIL ALL LANDSCAPING IN BIORETENTION BED IS COMPLETE.
8) CONTRACTOR SHALL EXCAVATE TO FINAL GRADE AND AFTER FINAL GRADING DEEPLY TILL BASIN FLOOR TO PROVIDE A WELL-AERATED, HIGHLY POROUS SURFACE TEXTURE.
9) SEE SHEET L1 FOR PLANTING SCHEDULE.
10) REFER TO THE VIRGINIA EROSION & SEDIMENT CONTROL HANDBOOK 1992 THRID EDITION, FOR MINIMUM STANDARDS FOR BIORETENTION BASIN.

TYPICAL BIORETENTION BASIN DETAIL AND NOTES

NOT TO SCALE

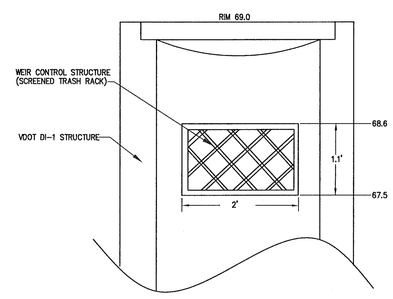

SCREENED WEIR CONTROL STRUCTURE DETAIL

NOT TO SCALE

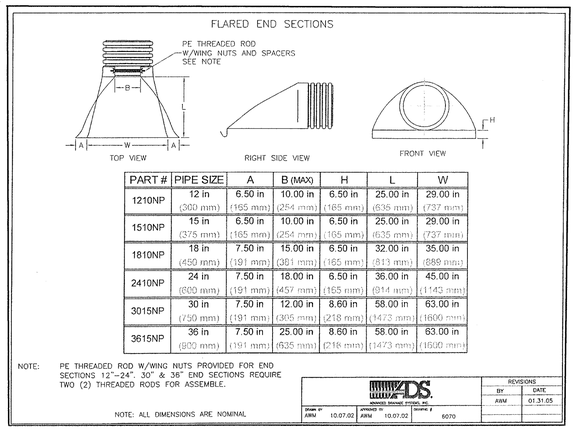

PART #	PIPE SIZE	A	B (MAX)	H	L	W
1210NP	12 in (300 mm)	6.50 in (165 mm)	10.00 in (254 mm)	6.50 in (165 mm)	25.00 in (635 mm)	29.00 in (737 mm)
1510NP	15 in (375 mm)	6.50 in (165 mm)	10.00 in (254 mm)	6.50 in (165 mm)	25.00 in (635 mm)	29.00 in (737 mm)
1810NP	18 in (450 mm)	7.50 in (191 mm)	15.00 in (381 mm)	6.50 in (165 mm)	32.00 in (813 mm)	35.00 in (889 mm)
2410NP	24 in (600 mm)	7.50 in (191 mm)	18.00 in (457 mm)	6.50 in (165 mm)	36.00 in (914 mm)	45.00 in (1143 mm)
3015NP	30 in (750 mm)	7.50 in (191 mm)	12.00 in (305 mm)	8.60 in (218 mm)	58.00 in (1473 mm)	63.00 in (1600 mm)
3615NP	36 in (900 mm)	7.50 in (191 mm)	25.00 in (635 mm)	8.60 in (218 mm)	58.00 in (1473 mm)	63.00 in (1600 mm)

NOTE: PE THREADED ROD W/WING NUTS PROVIDED FOR END SECTIONS 12"-24". 30" & 36" END SECTIONS REQUIRE TWO (2) THREADED RODS FOR ASSEMBLE.

NOTE: ALL DIMENSIONS ARE NOMINAL

DIMENSIONS SHOWN ARE FOR REFERENCE ONLY

DRAWN BY	DATE	DESIGNED BY	DATE	DRAWING #
AWM	10.07.02	AWM	10.07.02	6070

REVISIONS	
BY	DATE
AWM	01.31.05

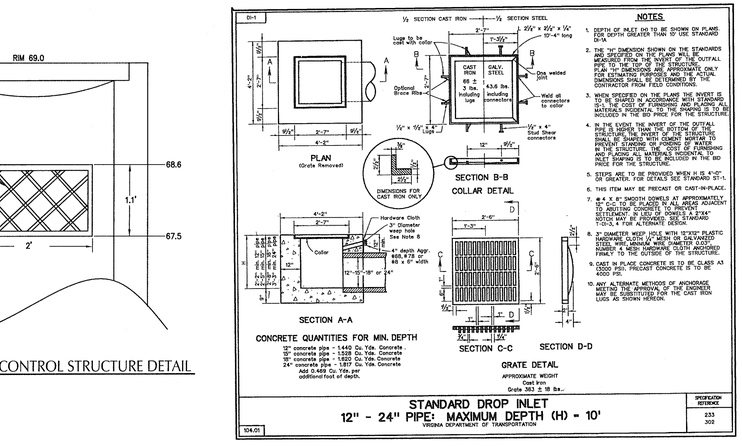

NOTES

1. DEPTH OF INLET DIG TO BE SHOWN ON PLANS FOR DEPTH GREATER THAN 10' USE STANDARD DI-1A.
2. THE "D" DIMENSION SHOWN ON THE STANDARDS WAS ASSUMED ON THE PLANS WILL BE MEASURED FROM THE INVERT OF THE OUTFALL PIPE TO THE TOP OF THE STRUCTURE. THE "D" DIMENSION SHOWN ON THE STANDARDS ONLY FOR ESTIMATING PURPOSES AND THE ACTUAL DIMENSIONS SHALL BE DETERMINED BY THE CONTRACTOR FROM FIELD CONDITIONS.
3. WHEN SPECIFIED ON THE PLANS THE INVERT IS TO BE SHAPED IN ACCORDANCE WITH FLARING END SECTION SPECIFICATIONS. THE FLARING END MATERIALS PERPENDICULAR TO THE DRAINING IS TO BE INCLUDED IN THE BID PRICE FOR THE STRUCTURE.
4. IN THE EVENT THE INVERT OF THE OUTFALL PIPE IS HIGHER THAN THE BOTTOM OF THE STRUCTURE, THE INVERT OF THE STRUCTURE SHALL BE SHAPED TO PROVIDE A SMOOTH TRANSITION TO PREVENT STANDING OR PONDING OF WATER IN THE STRUCTURE. THE COST OF FURNISHING AND PLACING THE MATERIAL REQUIRED FOR THE INVERT SHAPING IS TO BE INCLUDED IN THE BID PRICE FOR THE STRUCTURE.
5. STEPS ARE TO BE PROVIDED WHEN H IS 4'-0" OR GREATER. FOR DETAILS SEE STANDARD ST-1.
6. THIS ITEM MAY BE PRECAST OR CAST-IN-PLACE.
7. #4 X 8" SMOOTH DOWELS AT APPROXIMATELY 12" ON CENTER TO BE PLACED IN ADJACENT POUR OF CONCRETE TO ALLOW FOR SETTLEMENT. IN LIEU OF DOWELS A 2"X4" NOTCH MAY BE PROVIDED. SEE STANDARD T-DI-5, 4 FOR ALTERNATE DESIGN.
8. 3" DIAMETER WEEP HOLE WITH 12"X12" PLASTIC WIDE MESH HARDWARE CLOTH ANCHORED TO WIRE MESH. AROUND WEEP HOLE USE 1/2" WIDE MESH, NUMBER 4 MESH HARDWARE CLOTH ANCHORED FIRMLY TO THE OUTSIDE OF THE STRUCTURE.
9. CAST IN PLACE CONCRETE IS TO BE CLASS A3 4000 PSI. PRECAST CONCRETE IS TO BE 4000 PSI.
10. ANY ALTERNATE METHODS OF ANCHORAGE MEETING THE APPROVAL OF THE ENGINEER MAY BE USED IN LIEU OF THE CAST IRON LUGS AS SHOWN HEREON.

CONCRETE QUANTITIES FOR MIN. DEPTH
12" concrete pipe - 1.440 Cu. Yds. Concrete.
15" concrete pipe - 1.528 Cu. Yds. Concrete
18" concrete pipe - 1.620 Cu. Yds. Concrete
24" concrete pipe - 1.817 Cu. Yds. Concrete
Add 0.469 Cu. Yds. per additional foot of depth.

STANDARD DROP INLET
12" - 24" PIPE: MAXIMUM DEPTH (H) = 10'
VIRGINIA DEPARTMENT OF TRANSPORTATION
SPECIFICATION REFERENCE 233 302
104.01

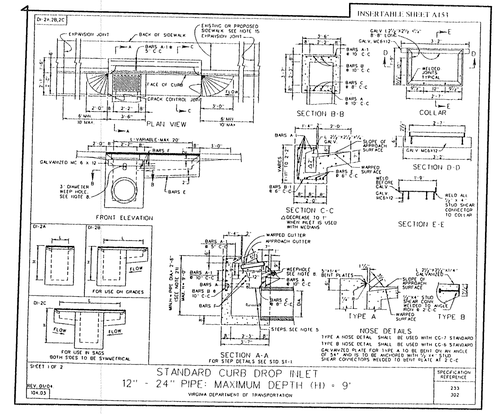

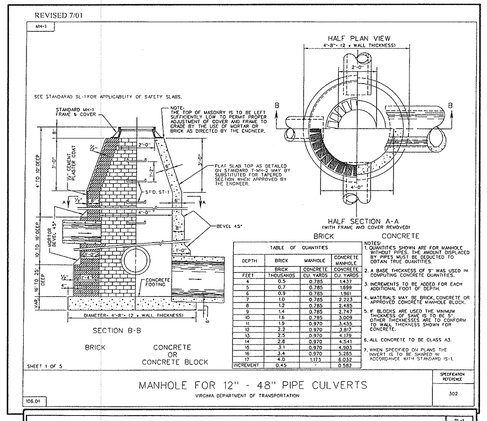

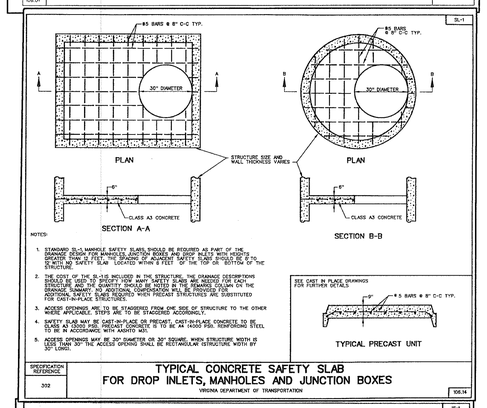

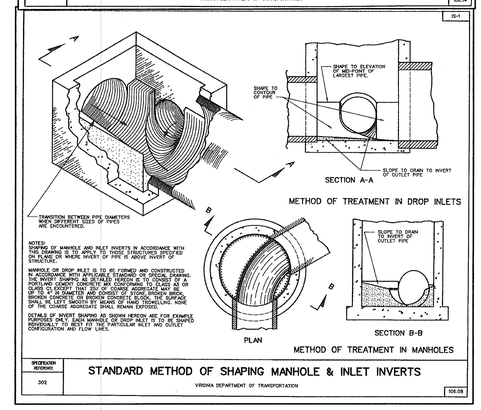

ENGINEERS • ARCHITECTS • PLANNERS
449 McLaws Circle, Williamsburg, VA 23185
Phone: 757.253.0673 Fax: 757.253.2319
Norfolk-Virginia Beach: 757.874.5015
www.dgjinc.com
DGJ INC.
COMMITTED TO EXCELLENCE

COMMONWEALTH OF VIRGINIA
DANIEL J. DE YOUNG
No.3517
9/3/06
PROFESSIONAL ENGINEER

THIS DOCUMENT CONTAINS INFORMATION PROPRIETARY TO DJG, INC. AND IS FURNISHED IN CONFIDENCE. THE INFORMATION HEREIN IS TO BE USED ONLY IN CONNECTION WITH A SPECIFIC PROJECT. REPRODUCTION OF THIS DOCUMENT, OR ANY PART THEREOF, FOR USE ON OTHER PROJECTS OR FOR OTHER PURPOSES IS PROHIBITED WITHOUT THE WRITTEN CONSENT OF DJG, INC. IS PROHIBITED. ALL RIGHTS RESERVED. COPYRIGHT © 2003.

REVISIONS

DATE	DESCRIPTION

BIO-RETENTION AND STORM DRAIN DETAILS

VIRGINIA DEPARTMENT OF TRANSPORTATION
NEW KENT SAFETY REST AREA AND INFORMATION CENTER
NEW KENT COUNTY, VIRGINIA

SCALE	DESIGNED	DRAWN	CHECKED	DATE
AS NOTED	BEK	MES	KMS	8/3/06

COMMISSION NUMBER
2070030

SHEET NUMBER
C12

SHEET GENERAL NOTES

* REFER TO THE MECHANICAL DRAWINGS FOR ADDITIONAL INFORMATION. THE SITE PLAN BELOW IS DIAGRAMATIC IN NATURE. THE ACTUAL PIPING LAYOUT WILL INCORPORATE A REVERSE RETURN PIPING SYSTEM AS SHOWN ON THE MECHANICAL DRAWINGS

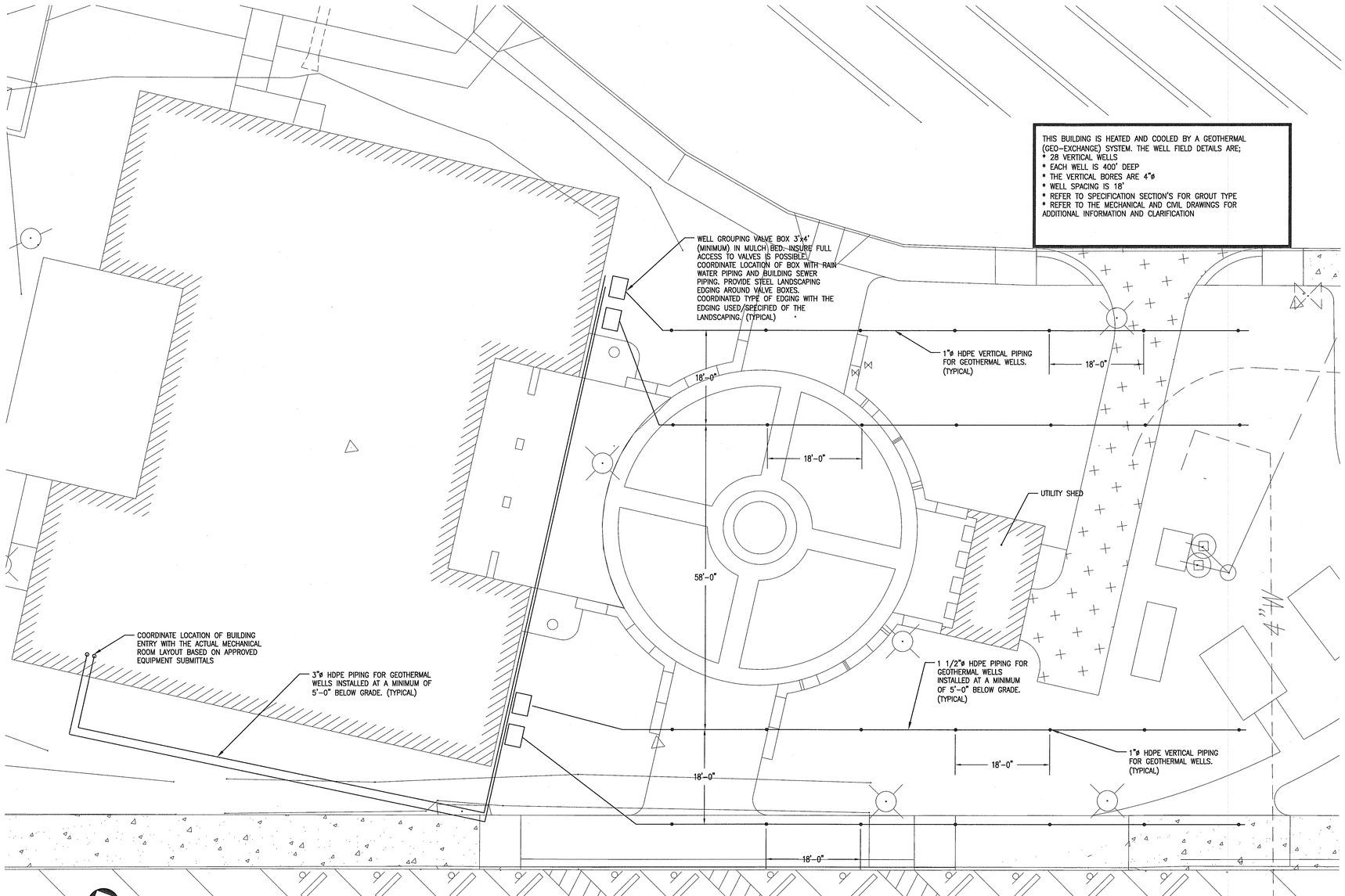

GEOTHERMAL SITE PLAN

SCALE: 3/32" = 1'-0"

GRAPHIC SCALE

0 4 8 12 16 20 24

SCALE: 3/32" = 1'-0"

ENGINEERS • ARCHITECTS • PLANNERS

DJG INC.

449 McLaws Circle, Williamsburg, VA 23185
Phone: 757.253.0673 Fax: 757.253.2319
Norfolk-Virginia Beach: 757.874.5015
www.djginc.com

COMMITTED TO EXCELLENCE

COMMONWEALTH OF VIRGINIA
DANIEL J. DE YOUNG
No.3517
PROFESSIONAL ENGINEER
6-3-06

THIS DOCUMENT CONTAINS INFORMATION PROPRIETARY TO DJG, INC. AND IS FURNISHED IN CONFIDENCE AN AN INSTRUMENT OF SERVICE FOR THE LIMITED PURPOSE OF EVALUATION, BIDDING AND REVIEW, OR CONSTRUCTION OF A SPECIFIC PROJECT. REPRODUCTION OF THIS DOCUMENT, IN WHOLE OR IN PART, OR THE MODIFICATION OF ANY DETAIL OR DESIGN WITHOUT THE EXPRESSED, WRITTEN CONSENT OF DJG, INC. IS PROHIBITED. ALL RIGHTS RESERVED. COPYRIGHT (C) 2006.

REVISIONS

NO.	DATE	DESCRIPTION

ENLARGED GEOTHERMAL SITE PLAN

VIRGINIA DEPARTMENT OF TRANSPORTATION

NEW KENT SAFETY REST AREA AND INFORMATION CENTER

NEW KENT COUNTY, VIRGINIA

SCALE	DESIGNED	DRAWN	CHECKED	DATE
AS NOTED	DSM	DSM	KPH	8/3/06

COMMISSION NUMBER
2070030

SHEET NUMBER
C13

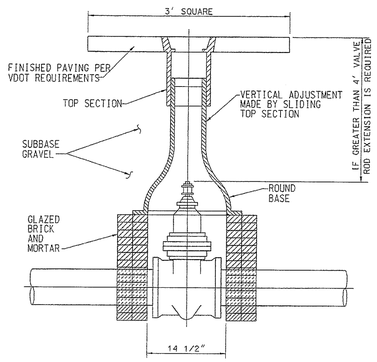

SMALL VALVE BOX

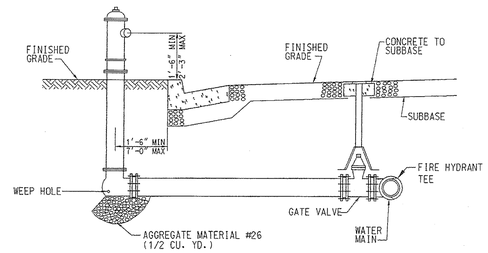

CURB & GUTTER

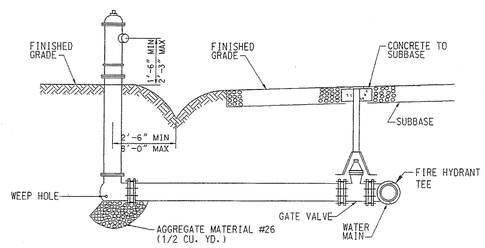

DITCH

NOTE: RESTRAIN ENTIRE LENGTH OF PIPE WITH THREADED RODS. THREADS ARE TO BE "NATIONAL STANDARD THREADS".

TYPICAL FIRE HYDRANT DETAIL

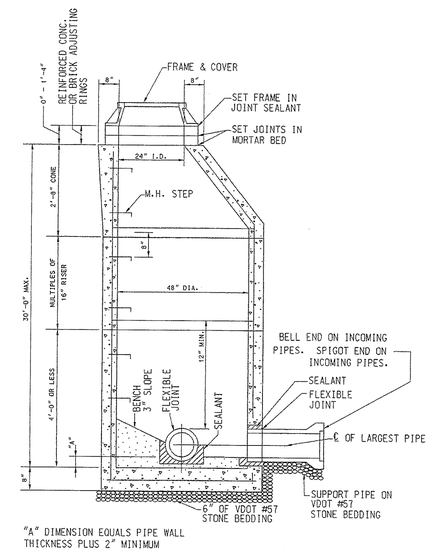

STANDARD PRECAST CONCRETE MANHOLE SEWERS 8" TO 15"

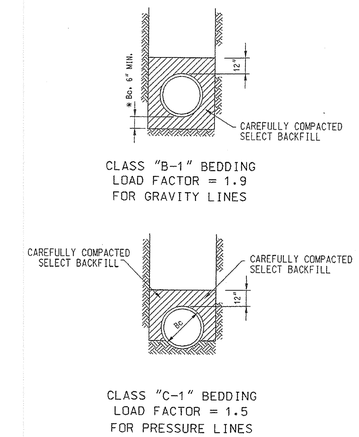

TRENCH BEDDING DETAIL

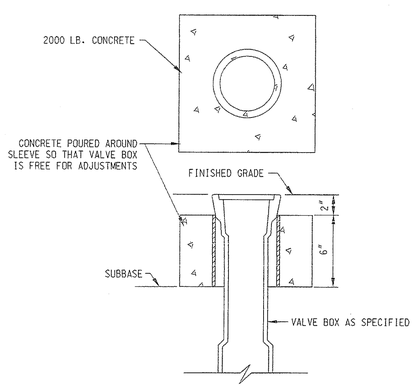

VALVE BOX INSTALLATION DETAIL

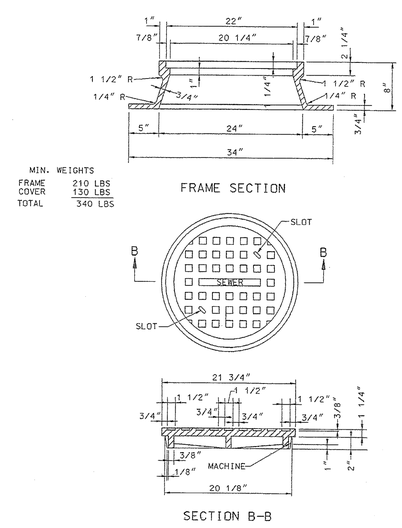

STANDARD MANHOLE FRAME & COVER

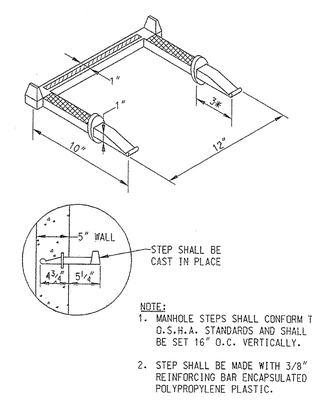

NOTE:
1. MANHOLE STEPS SHALL CONFORM TO O.S.H.A. STANDARDS AND SHALL BE SET 16" O.C. VERTICALLY.
2. STEP SHALL BE MADE WITH 3/8" STEEL REINFORCING BAR ENCAPSULATED IN POLYPROPYLENE PLASTIC.

MANHOLE STEP - ALTERNATE

ENGINEERS • ARCHITECTS • PLANNERS
449 McLaws Circle, Williamsburg, VA 23185
Phone: 757.253.0673 Fax: 757.253.2319
Norfolk-Virgina Beach: 757.874.5015
www.dgjinc.com
DJG INC.
COMMITTED TO EXCELLENCE

COMMONWEALTH OF VIRGINIA
DANIEL J. DE YOUNG
No.3517
6-3-06
PROFESSIONAL ENGINEER

REVISIONS

DATE	DESCRIPTION

THIS DOCUMENT CONTAINS INFORMATION PROPRIETARY TO DJG, INC. AND IS FURNISHED IN CONFIDENCE AND WITHOUT WARRANTY OF ANY KIND. ACCEPTANCE OF THIS DOCUMENT AND REVIEW OR CONSTRUCTION OF A SPECIFIC PROJECT IS PERMISSIBLE ONLY WITH WRITTEN CONSENT OF DJG, INC. IS PROHIBITED. ALL RIGHTS RESERVED. COPYRIGHT © 2006

UTILITY DETAILS

VIRGINIA DEPARTMENT OF TRANSPORTATION
NEW KENT SAFETY REST AREA AND INFORMATION CENTER
NEW KENT COUNTY, VIRGINIA

SCALE	DESIGNED	DRAWN	CHECKED	DATE
AS NOTED	BMB	BMB	KWS	8/3/06

COMMISSION NUMBER
2070030

SHEET NUMBER
C14

WATER AND SEWER NOTES

1. ALL CONSTRUCTION MATERIALS AND INSTALLATION SHALL CONFORM TO THE LATEST EDITION OF STANDARDS, NEW KENT COUNTY WATER AUTHORITY.
2. CONTRACTOR SHALL BE RESPONSIBLE FOR NOTIFYING THE UTILITY CONSTRUCTION DIVISION AND SCHEDULING A PRE-CONSTRUCTION MEETING AT LEAST 48 HOURS PRIOR TO STARTING ANY WORK ON THIS PROJECT. ALL WORK SHALL BE SUBJECT TO INSPECTION BY WATER AUTHORITY INSPECTORS. THE CONTRACTOR SHALL OBTAIN ALL NECESSARY PERMITS.
3. THE CONTRACTOR SHALL INCLUDE IN APPLICABLE BID PRICE, THE COST OF LOCATING AND UNCOVERING ALL SEWER MANHOLES AND ALL VALVE BOXES AFTER COMPLETION OF ALL PAVING AND ADJUST THEM TO THE FINAL ROAD GRADE.
4. THE LOCATION OF EXISTING UTILTIES ACROSS OR ALONG THE LINE OF THE PROPOSED WORK IS NO NECESSARILY SHOWN ON THE PLANS AND WHERE SHOWN IS ONLY APPROXIMATLEY CORRECT. THE CONTRACTOR SHALL, ON HIS OWN INITIATIVE AND AT NO EXTRA COST, LOCATE ALL UNDERGROUND LINES AND STRUCTURES AS NECESSARY. THE CONTRACTOR SHALL BE RESPOSIBLE FOR ANY DAMAGE TO UNDERGROUND STRUCTURES.
5. MINIMUM COVER OVER TOP OF WATER PIPE SHALL BE 3.50 FEET.
6. DATUM FOR ALL ELEVATIONS SHOWN IN NATIONAL GEODETIC SURVEY.
7. ENGINEER SHALL CERTIFY THAT UNPAVED STREET AREA TO SUBGRADE PRIOR TO CONTRACTOR INSTALLING WATER SYSTEM. CURB AND GUTTER, IF REQUIRED, SHALL BE INSTALLED PRIOR TO ACCEPTANCE OF WATER SYSTEM BY WATER AUTHORITY.
8. CONTRACTOR SHAL CALL "MISS UTILITY" TOLL FREE AT 1-800-552-7001 PRIOR TO CONSTRUCTION.
9. NO STRUCTURES OR PLANTING OF TREES SHALL BE PERMITEED IN UTILITY EASEMENTS.
10. SERVICE SADDLES MUST BE USED ON WATER CONNECTIONS TO PVC MAINS LESS THAN 6" IN DIAMETER.
11. FIRE HYDRANTS SHALL BE INSTALLED IN ACCORDANCE WITH THE TYPICAL FIRE HYDRANT DETAIL ON SHEET C14.
12. SEWER MANHOLE COVERS SHALL BE IN ACCORDANCE WITH STANDARD MANHOLE FRAME AND COVER DETAIL ON SHEET C14.
13. FINAL ACCEPTANCE BY WATER AUTHORITY SHALL NOT BE MADE UNTIL ALL WORK SHOWN ON APPROVED UTILITY PLANS IS COMPLETED INCLUDING PAVING, GRADING, AND ALL REQUIRED ADJUSTMENTS.

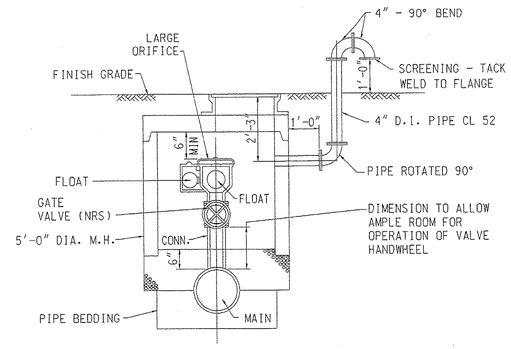

COMBINATION AIR VALVE
FOR WATER SERVICE

NOT TO SCALE

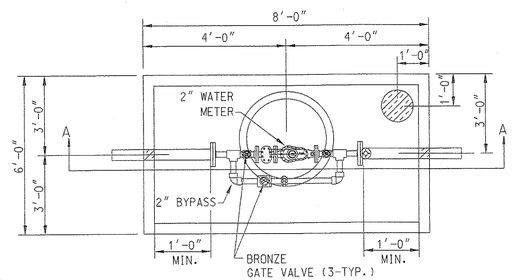

PLAN VIEW

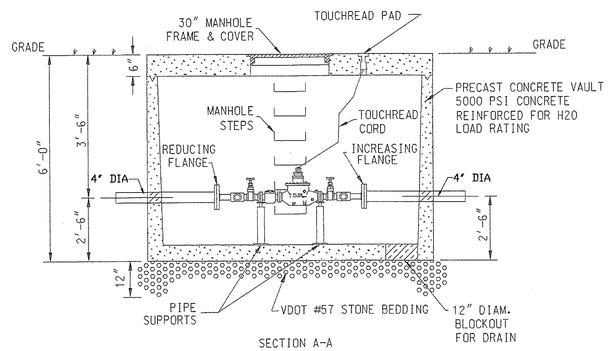

SECTION A-A

REST AREA
2" WATER METER & VAULT

NOT TO SCALE

ENGINEERS • ARCHITECTS • PLANNERS
449 McLaws Circle, Williamsburg, VA 23185
Phone: 757.253.0673 Fax: 757.253.2319
Norfolk-Virgina Beach: 757.874.5015
www.dgjinc.com
DJG INC.
COMMITTED TO EXCELLENCE

COMMONWEALTH OF VIRGINIA
DANIEL J. DE YOUNG
No.3317
8-3-06
PROFESSIONAL ENGINEER

THIS DOCUMENT CONTAINS INFORMATION PROPRIETARY TO DJG, INC. AND IS FURNISHED IN CONFIDENCE AND WITHOUT RECOURSE TO STATE FOR THE LIMITED PURPOSES OF REVIEW AND REVISION OF CONSTRUCTION OF A SPECIFIC PROJECT. IT MAY NOT BE USED FOR OTHER PURPOSES OR REPRODUCED IN WHOLE OR IN PART WITHOUT THE WRITTEN CONSENT OF DJG, INC. IS PROHIBITED. COPYRIGHT (C) 2006 ALL RIGHTS RESERVED.

REVISIONS

DATE	DESCRIPTION

UTILITY NOTES AND DETAILS

VIRGINIA DEPARTMENT OF TRANSPORTATION
NEW KENT SAFETY REST AREA AND INFORMATION CENTER
NEW KENT COUNTY, VIRGINIA

SCALE	AS NOTED
DESIGNED	BMB
DRAWN	BMB
CHECKED	KWS
DATE	8/3/06

COMMISSION NUMBER
2070030

SHEET NUMBER
C15

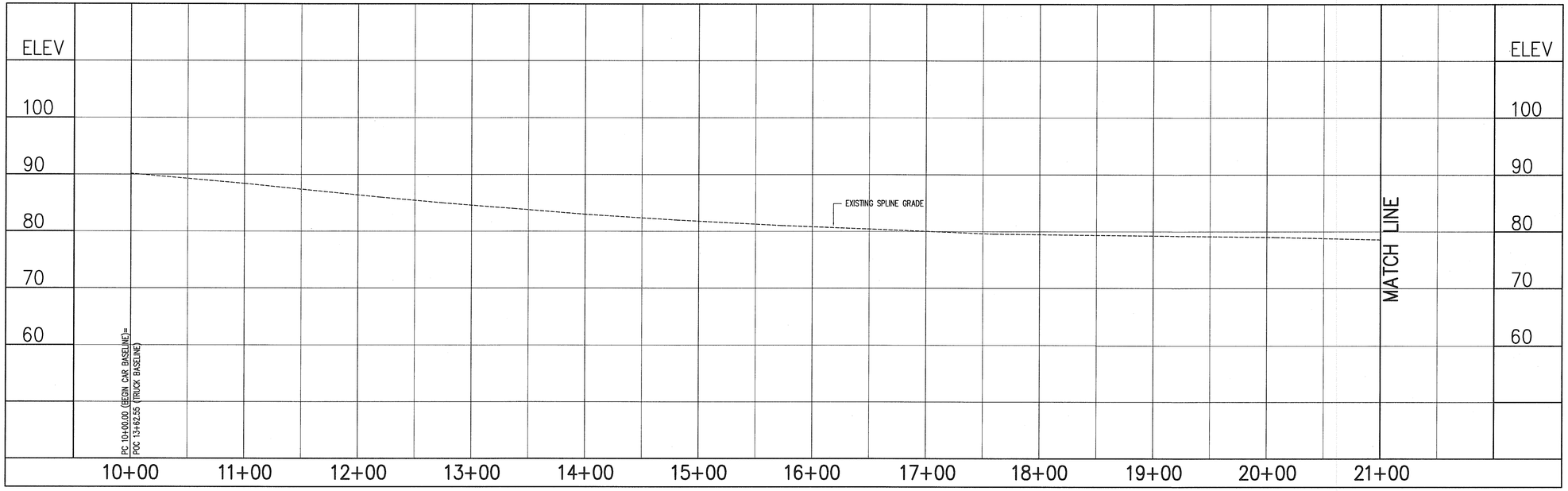

CAR BASELINE PROFILE

HORIZONTAL SCALE: 1"=50'
VERTICAL SCALE: 1"=10'

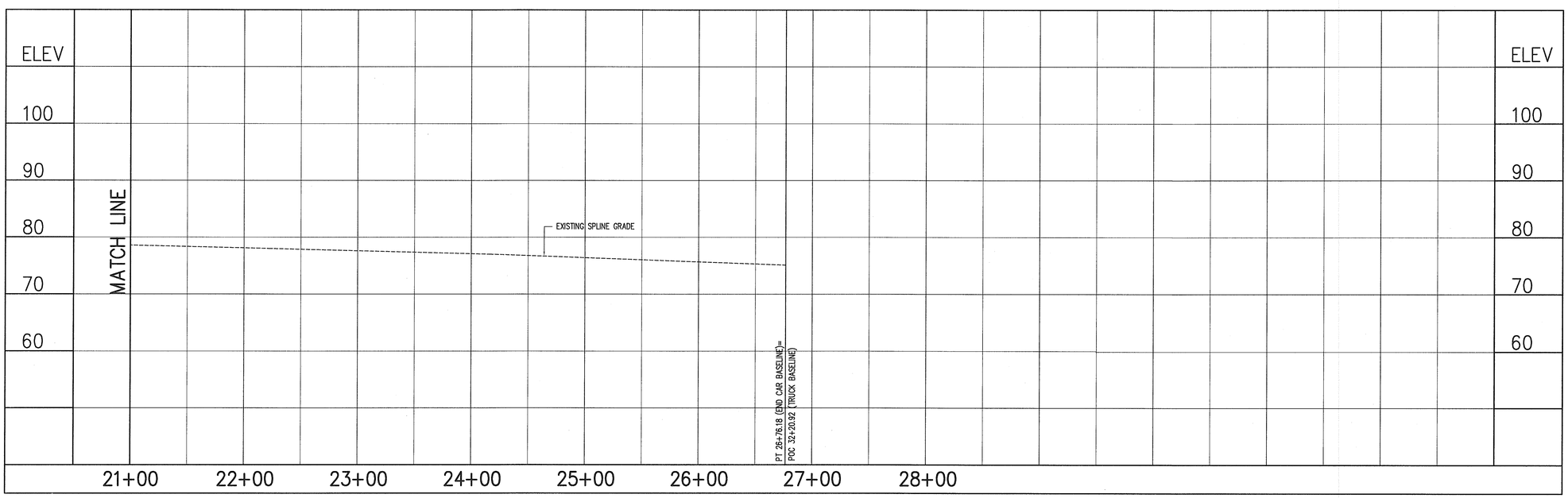

CAR BASELINE PROFILE

HORIZONTAL SCALE: 1"=50'
VERTICAL SCALE: 1"=10'

ENGINEERS • ARCHITECTS • PLANNERS
449 McLaws Circle, Williamsburg, VA 23185
Phone: 757.253.0673 Fax: 757.253.2319
Norfolk-Virginia Beach: 757.874.5015
www.dgjinc.com
DJG INC.
COMMITTED TO EXCELLENCE

COMMONWEALTH OF VIRGINIA
DANIEL J. DE YOUNG
No.3517
8-3-06
PROFESSIONAL ENGINEER

THIS DOCUMENT CONTAINS INFORMATION PROPRIETARY TO D.J.G. INC. AND IS FURNISHED IN CONFIDENCE AS AN INSTRUMENT OF SERVICE FOR THE LIMITED PURPOSE OF EVALUATION, BIDDING OR CONSTRUCTION WITH RESPECT TO A SPECIFIC PROJECT. REPRODUCTION OF THIS DOCUMENT IN WHOLE OR IN PART OR THE MODIFICATION OF ANY DETAIL OR DESIGN WITHOUT THE EXPRESSED WRITTEN CONSENT OF D.J.G. INC. IS PROHIBITED. ALL RIGHTS RESERVED. COPYRIGHT (C)2006

REVISIONS

	DATE	DESCRIPTION

CAR BASELINE PROFILE

VIRGINIA DEPARTMENT OF TRANSPORTATION
NEW KENT SAFETY REST AREA AND INFORMATION CENTER
NEW KENT COUNTY, VIRGINIA

SCALE AS NOTED	DESIGNED BMB	DRAWN BMB	CHECKED KMS
DATE 8/3/06			

COMMISSION NUMBER
2070030

SHEET NUMBER
C16

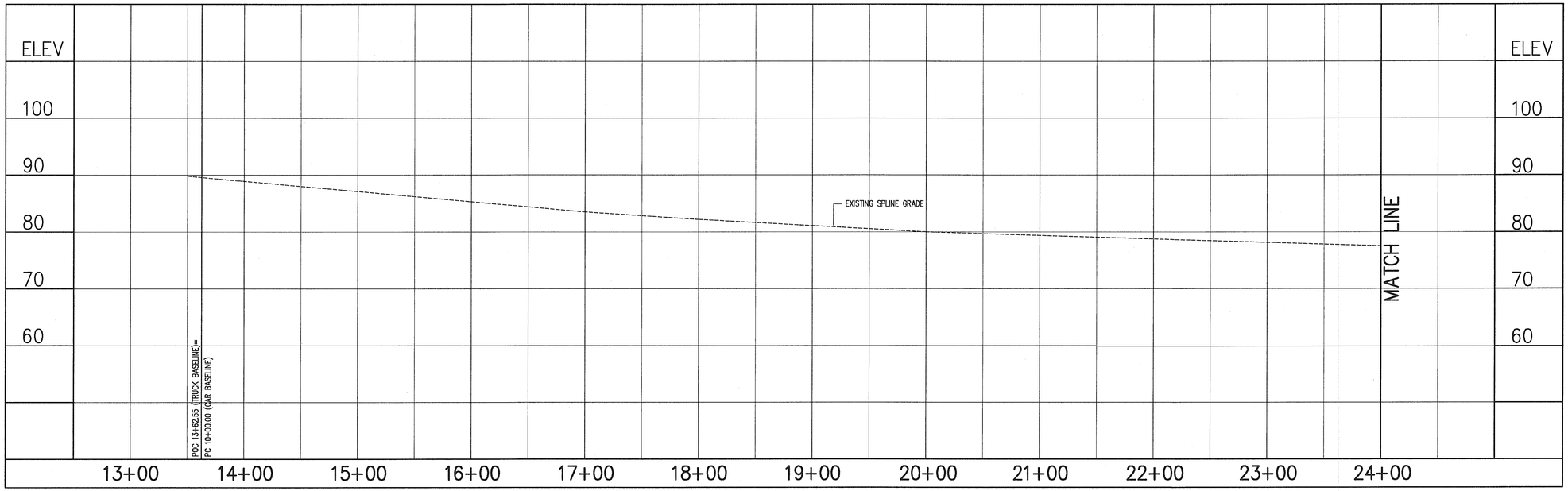

TRUCK BASELINE PROFILE

HORIZONTAL SCALE: 1"=50'
VERTICAL SCALE: 1"=10'

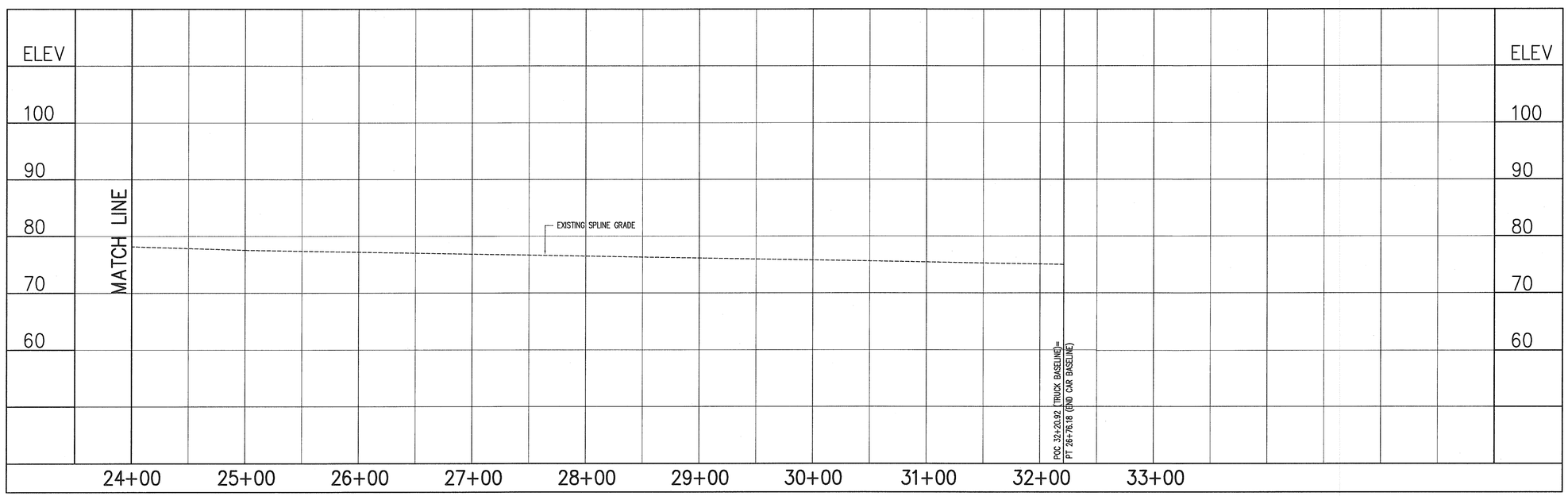

TRUCK BASELINE PROFILE

HORIZONTAL SCALE: 1"=50'
VERTICAL SCALE: 1"=10'

ENGINEERS • ARCHITECTS • PLANNERS
DJG INC.
449 McLaws Circle, Williamsburg, VA 23185
Phone: 757.253.0673 Fax: 757.253.2319
Norfolk-Virginia Beach: 757.874.5015
www.djginc.com
COMMITTED TO EXCELLENCE

COMMONWEALTH OF VIRGINIA
DANIEL J. DE YOUNG
No.3517
8-3-06
PROFESSIONAL ENGINEER

THIS DOCUMENT CONTAINS INFORMATION PROPRIETARY TO DJG, INC. AND IS FURNISHED IN CONFIDENCE AN AN INSTRUMENT OF SERVICE FOR THE LIMITED PURPOSE OF EVALUATION, BIDDING AND REVIEW, OR CONSTRUCTION OF A SPECIFIC PROJECT. REPRODUCTION OF THIS DOCUMENT, IN WHOLE OR IN PART, OR THE MODIFICATION OF ANY DETAIL OR DESIGN WITHOUT THE EXPRESSED WRITTEN CONSENT OF DJG, INC. IS PROHIBITED. ALL RIGHTS RESERVED. COPYRIGHT (C) 2006

REVISIONS

NO.	DATE	DESCRIPTION

TRUCK BASELINE PROFILE

VIRGINIA DEPARTMENT OF TRANSPORTATION
NEW KENT SAFETY REST AREA
AND INFORMATION CENTER
NEW KENT COUNTY, VIRGINIA

SCALE AS NOTED
DESIGNED BMB
DRAWN BMB
CHECKED KMS
DATE 8/3/06

COMMISSION NUMBER
2070030

SHEET NUMBER
C17

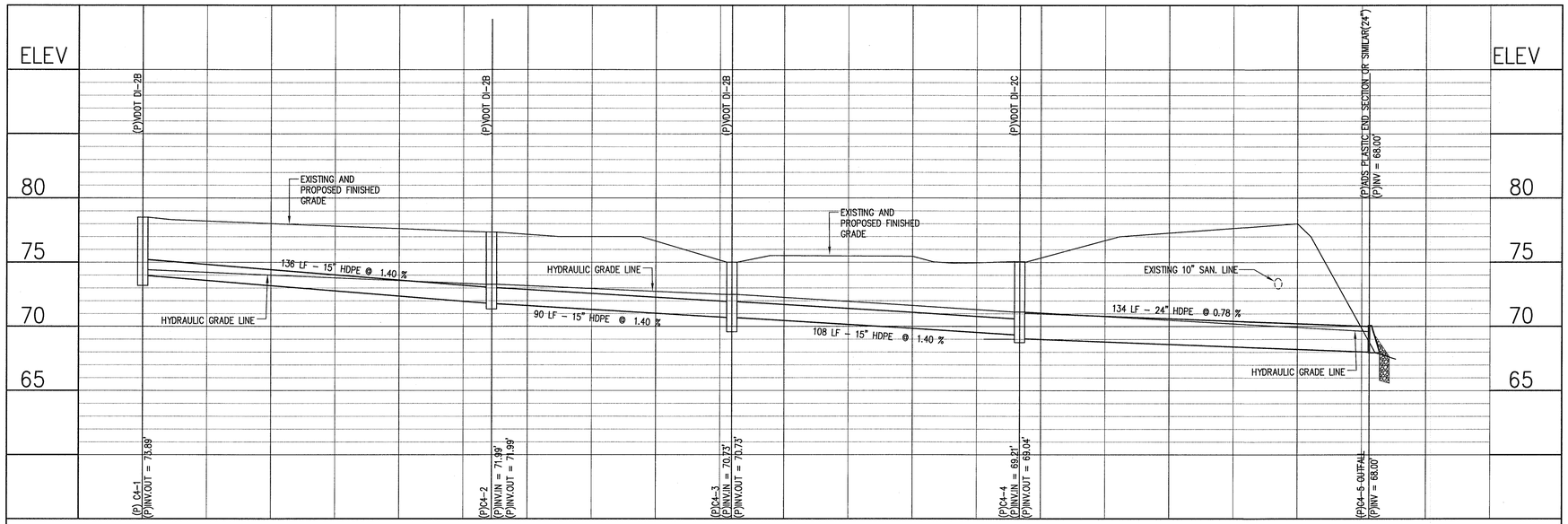

STORM SEWER PROFILE

HORIZONTAL SCALE: 1"=25'
VERTICAL SCALE: 1"=5'

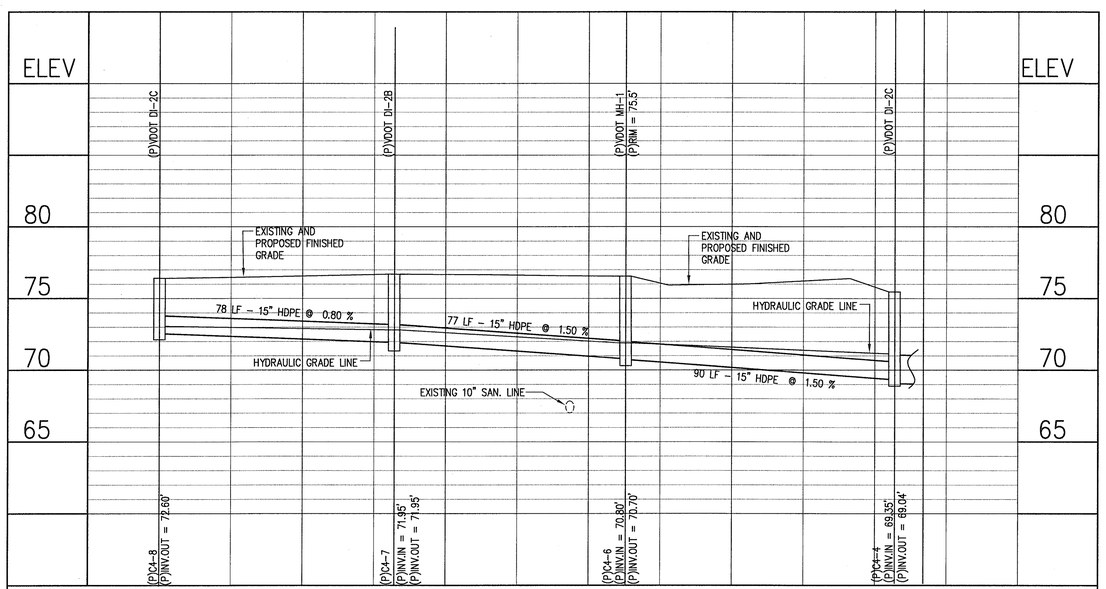

STORM SEWER PROFILE

HORIZONTAL SCALE: 1"=25'
VERTICAL SCALE: 1"=5'

ENGINEERS • ARCHITECTS • PLANNERS
DJG INC.
449 McLaws Circle, Williamsburg, VA 23185
Phone: 757.253.0673 Fax: 757.253.2319
Norfolk-Virginia Beach: 757.874.5015
www.djginc.com
COMMITTED TO EXCELLENCE

COMMONWEALTH OF VIRGINIA
DANIEL J. DE YOUNG
No.3517
6-3-06
PROFESSIONAL ENGINEER

THIS DOCUMENT CONTAINS INFORMATION PROPRIETARY TO DJG, INC. AND IS FURNISHED IN CONFIDENCE AN AN INSTRUMENT OF SERVICE FOR THE LIMITED PURPOSE OF EVALUATION, BIDDING AND REVIEW, OR CONSTRUCTION OF A SPECIFIC PROJECT. REPRODUCTION OF THIS DOCUMENT, IN WHOLE OR IN PART, OR THE MODIFICATION OF ANY DETAIL OR DESIGN WITHOUT THE EXPRESSED WRITTEN CONSENT OF DJG, INC. IS PROHIBITED. ALL RIGHTS RESERVED. COPYRIGHT (C)2006

REVISIONS

NO.	DATE	DESCRIPTION

STORM SYSTEM PROFILE #1

VIRGINIA DEPARTMENT OF TRANSPORTATION
NEW KENT SAFETY REST AREA
AND INFORMATION CENTER
NEW KENT COUNTY, VIRGINIA

SCALE AS NOTED
DESIGNED MEP
DRAWN MES
CHECKED KMS
DATE 8/3/06

COMMISSION NUMBER
2070030

SHEET NUMBER
C18

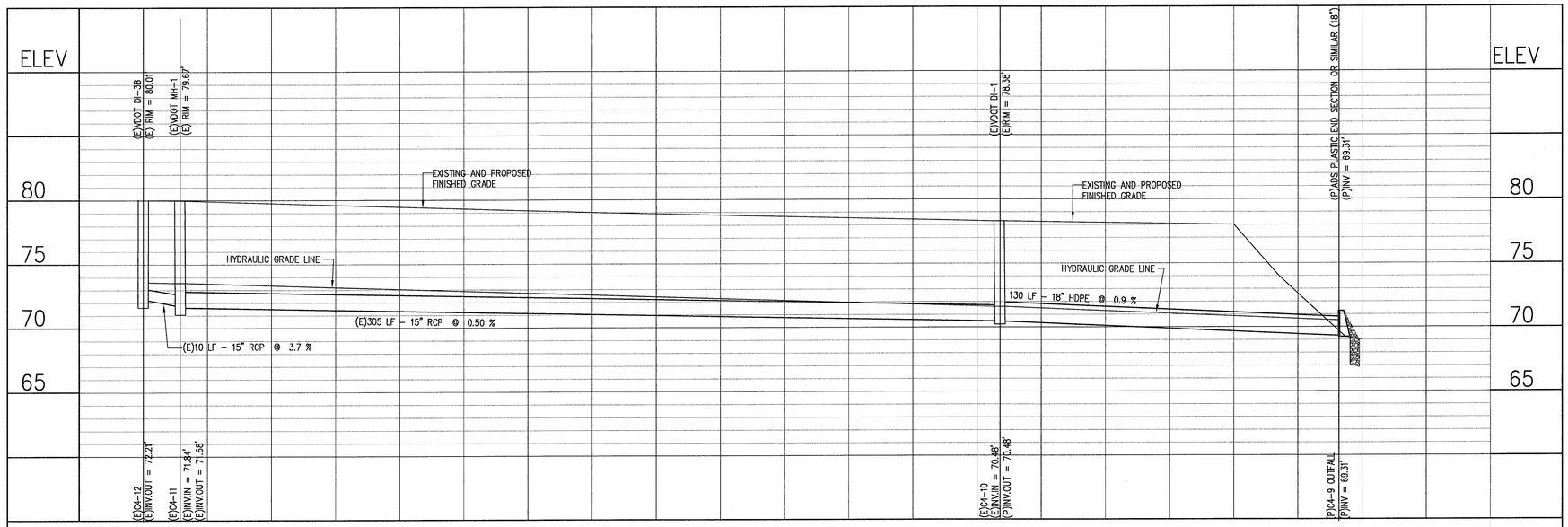

STORM SEWER PROFILE

HORIZONTAL SCALE: 1"=25'
VERTICAL SCALE: 1"=5'

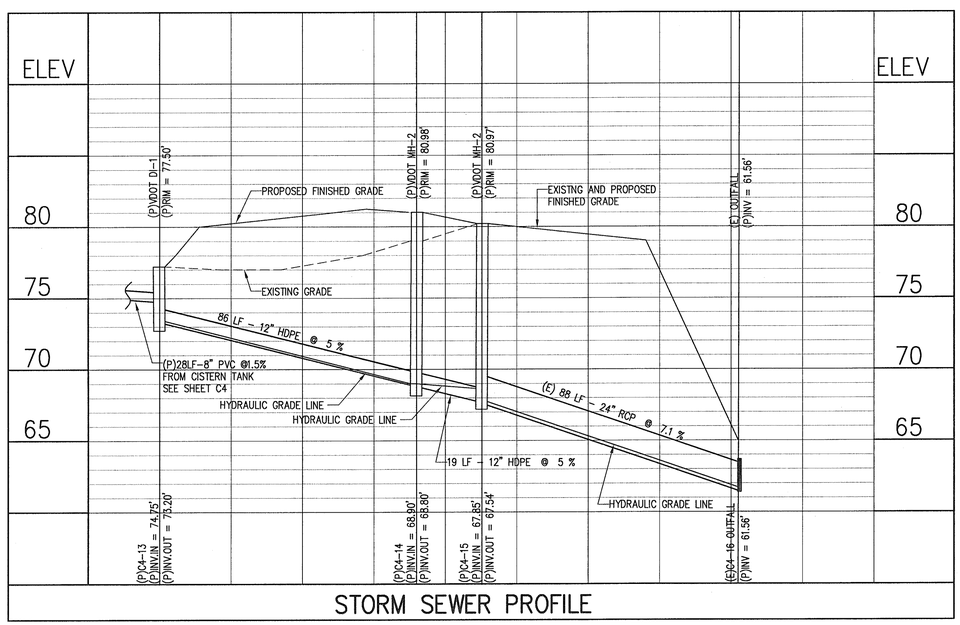

STORM SEWER PROFILE

HORIZONTAL SCALE: 1"=25'
VERTICAL SCALE: 1"=5'

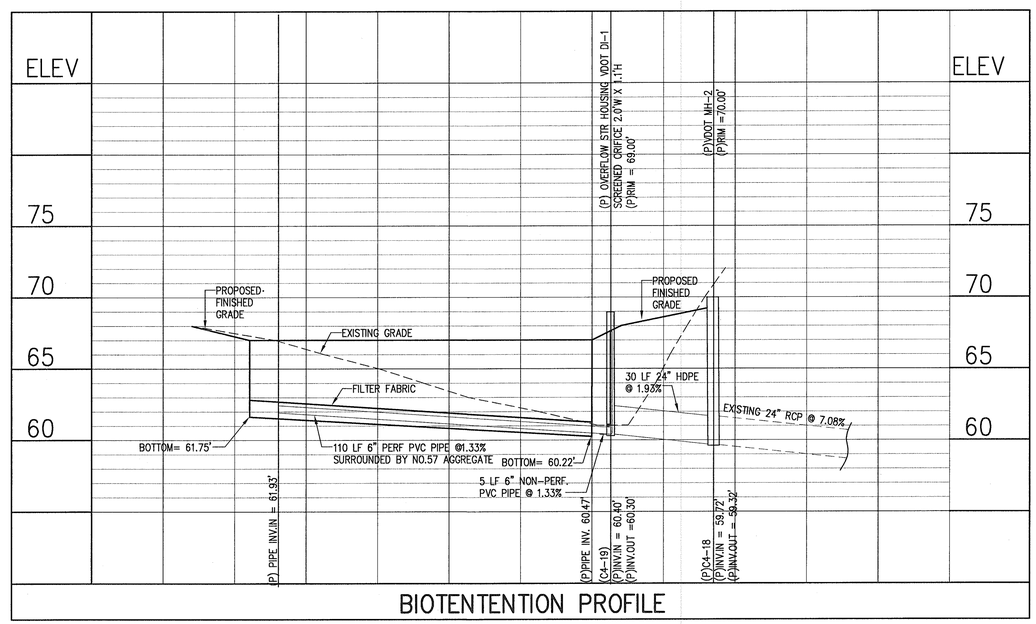

BIOTENTENTION PROFILE

HORIZONTAL SCALE: 1"=25'
VERTICAL SCALE: 1"=5'

ENGINEERS • ARCHITECTS • PLANNERS
449 McLaws Circle, Williamsburg, VA 23185
Phone: 757.253.0673 Fax: 757.253.2319
Norfolk-Virginia Beach: 757.874.5015
www.djginc.com
COMMITTED TO EXCELLENCE

COMMONWEALTH OF VIRGINIA
DANIEL J. DE YOUNG
No.3517
8/3/06
PROFESSIONAL ENGINEER

THIS DOCUMENT CONTAINS INFORMATION PROPRIETARY TO DJG, INC. AND IS FURNISHED IN CONFIDENCE AN AN INSTRUMENT OF SERVICE FOR THE LIMITED PURPOSE OF EVALUATION, BIDDING AND REVIEW, OR CONSTRUCTION OF SERVICE, PROJECT, REPRODUCTION OF THIS DOCUMENT, IN WHOLE OR IN PART, OR THE MODIFICATION OF ANY DETAIL OR DESIGN WITHOUT THE EXPRESSED WRITTEN CONSENT OF DJG, INC. IS PROHIBITED. ALL RIGHTS RESERVED. COPYRIGHT (C) 2006

REVISIONS

NO.	DATE	DESCRIPTION

STORM SYSTEM PROFILE #2

VIRGINIA DEPARTMENT OF TRANSPORTATION
NEW KENT SAFETY REST AREA AND INFORMATION CENTER
NEW KENT COUNTY, VIRGINIA

SCALE AS NOTED
DESIGNED MEP
DRAWN MES
CHECKED KMS
DATE 8/3/06

COMMISSION NUMBER
2070030

SHEET NUMBER
C19

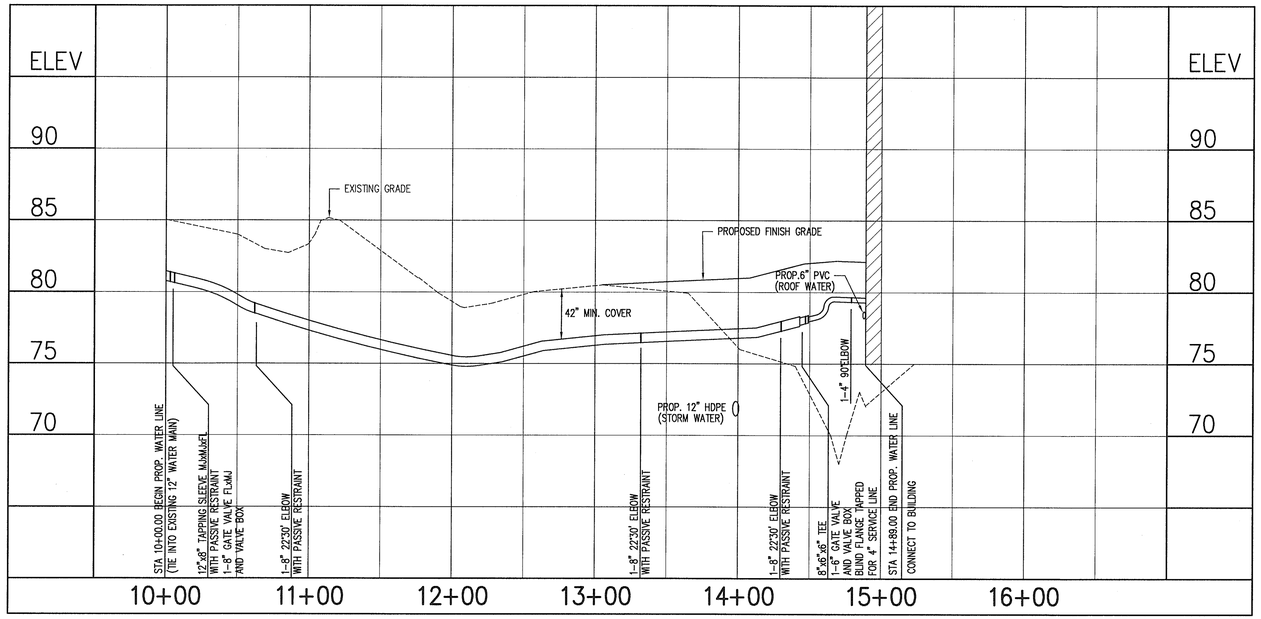

WATER LINE PROFILE

HORIZONTAL SCALE: 1"=50'
VERTICAL SCALE: 1"=5'

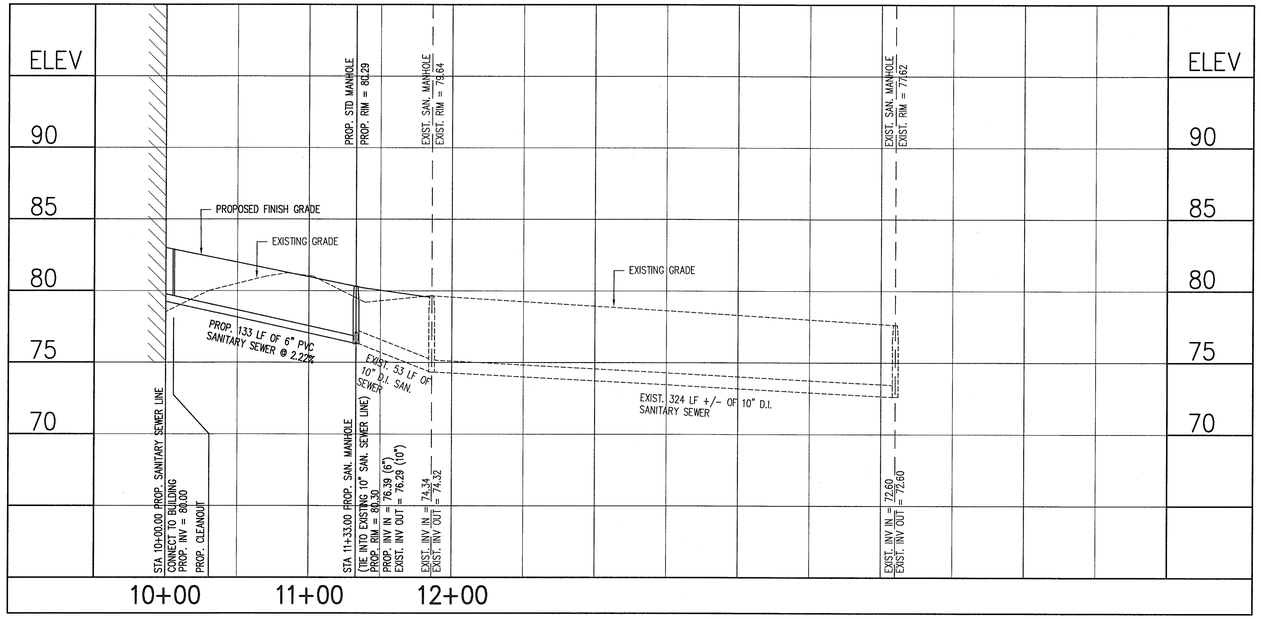

SANITARY SEWER PROFILE

HORIZONTAL SCALE: 1"=50'
VERTICAL SCALE: 1"=5'

ENGINEERS • ARCHITECTS • PLANNERS
DJG INC.
449 McLaws Circle, Williamsburg, VA 23185
Phone: 757.253.0673 Fax: 757.253.2319
Norfolk-Virginia Beach: 757.874.5015
www.djginc.com
COMMITTED TO EXCELLENCE

COMMONWEALTH OF VIRGINIA
DANIEL J. DE YOUNG
No.3517
8-3-06
PROFESSIONAL ENGINEER

THIS DOCUMENT CONTAINS INFORMATION PROPRIETARY TO DJG, INC. AND IS FURNISHED IN CONFIDENCE AN AN INSTRUMENT OF SERVICE FOR THE LIMITED PURPOSE OF EVALUATION, BIDDING AND REVIEW, OR CONSTRUCTION OF A SPECIFIC PROJECT. REPRODUCTION OF THIS DOCUMENT, IN WHOLE OR IN PART, OR THE MODIFICATION OF ANY DETAIL OR DESIGN WITHOUT THE EXPRESSED, WRITTEN CONSENT OF DJG, INC. IS PROHIBITED. ALL RIGHTS RESERVED. COPYRIGHT (C)2006

REVISIONS

No.	DATE	DESCRIPTION

WATER AND SANITARY SEWER LINE PROFILE

VIRGINIA DEPARTMENT OF TRANSPORTATION
NEW KENT SAFETY REST AREA AND INFORMATION CENTER
NEW KENT COUNTY, VIRGINIA

SCALE AS NOTED
DESIGNED BMB
DRAWN BMB
CHECKED KMS
DATE 8/3/06

COMMISSION NUMBER
2070030

SHEET NUMBER
C20

LEGEND

EXISTING:

- (E) = EXISTING
- E = ELECTRIC BOX
- = WATER VALVE
- = FIRE HYDRANT
- = LIGHT POLE (L.P.)
- = POWER POLE
- = GUY WIRE
- = BOLLARD
- = SIGN
- —W— = UNDERGROUND WATER LINE
- —TEL— = UNDERGROUND TELEPHONE LINE
- = FENCE
- = CENTERLINE OF DITCH
- 18"RCP = STORMWATER PIPES
- R/W = RIGHT-OF-WAY
- —280— = CONTOURS (FEET)
- = EXISTING TREE
- = TREELINE
- —12"W— = EXISTING WATERLINE
- 10" D.I. = EXISTING SANITARY SEWER LINE

PROPOSED:

- TYP. = TYPICAL
- R = RADIUS
- = HANDICAP ACCESSIBLE SPACE
- = SITE LIGHT
- = SPOT LIGHT
- = BOLLARD
- = CONCRETE
- = LARGE DECIDUOUS TREE
- = EVERGREEN / ORNAMENTAL TREE
- = LARGE SHRUB
- = SMALL SHRUB
- = ORNAMENTAL GRASS/PERRENIAL
- Nd/5 = ABBREVIATION AND QUANTITY OF PLANT MATERIAL

PLANT SCHEDULE

ABBR.	QTY.	SCIENTIFIC NAME	COMMON NAME	TYPE	SIZE
TREES					
Ab	14	Amelanchier arboria	Downy Serviceberry	Deciduous	1 1/2"– 2" CAL. B&B
Ar	10	Acer rubrum	Red Maple	Deciduous	2 1/2" –3" CAL. B&B
Ci	14	Chionanthus virginicus	Fringe Tree	Deciduous	1 1/2"– 2" CAL. B&B
Cf	15	Cornus florida	Flowering Dogwood	Deciduous	1 1/2"– 2" CAL. B&B
Fa	10	Fraxinus americana	White Ash	Deciduous	2 1/2" –3" CAL. B&B
Io	14	Ilex opaca	American Holly	Evergreen	5'–6' Ht. B&B
Lt	5	Liriodendron tulipifera	Tulip–Tree	Deciduous	2 1/2" –3" CAL. B&B
Mv	17	Magnolia virginiana	Sweetbay Magnolia	Evergreen	1 1/2"– 2" CAL. B&B
Ns	4	Nyssa sylvatica	Black Gum	Deciduous	1 1/2"– 2" CAL. B&B
Pe	10	Pinus echinata	Shortleaf Pine	Evergreen	5'–6' Ht. B&B
Pt	13	Pinus taeda	Loblolly Pine	Evergreen	5'–6' Ht. B&B
Pv	22	Prunus virginiana	Choke Cherry	Deciduous	1 1/2"– 2" CAL. B&B
Qf	8	Quercus falcata	Southern Red Oak	Deciduous	2 1/2" –3" CAL. B&B
Sa	9	Sassafras albidum	Common Sassafras	Deciduous	1 1/2"– 2" CAL. B&B
SHRUBS					
Cr	15	Cornus spp.	Red Twig Dogwood	Evergreen	24"–36" Ht. CONTAINER
Ir	32	Itea virginica	Virginia Sweetspire	Deciduous	24"–36" Ht. CONTAINER
Hm	2	Hydrangea macrophylla	Bigleaf Hydrangea 'Blue Wave'	Deciduous	24"–36" Ht. CONTAINER
Kl	20	Kalmia latifilia	Mountain Laurel	Deciduous	24"–36" Ht. CONTAINER
Mc	25	Myrica cerifera	Southern Wax Myrtle	Evergreen	24"–36" Ht. CONTAINER
Vd	17	Viburnum dentatum	Southern Arrow–Wood Viburnum	Deciduous	24"–36" Ht. CONTAINER
PERENNIALS & GROUND COVERS					
Cv	37	Coreopsis verticillata	Coreopsis Moonbeam	Cut Back in Fall	1–3 Gal. Cont.
Ep	41	Echinacea purpurea	Purple Coneflower	Cut Back in Fall	1–3 Gal. Cont.
Hf	6	Hemerocallis 'Frankly Scarlet'	Frankly Scarlet Day Lilly	Cut Back in Fall	1–3 Gal. Cont.
Hh	178	Hedera helix	English Ivy	Cut Back in Fall	Flats – 1 Gal. Cont.
Hs	81	Hemerocallis 'Stella Dora'	Stella Dora Day Lilly	Cut Back in Fall	1–3 Gal. Cont.
Ls	6	Leucanthemum x superbum	Shasta Daisy	Cut Back in Fall	1–3 Gal. Cont.
Rh	36	Rudbeckia hirta	Black–Eyed Susan	Cut Back in Fall	1–3 Gal. Cont.

BIO-RETENTION PLANT SCHEDULE

ABBR.	QTY.	SCIENTIFIC NAME	COMMON NAME	TYPE	SIZE
TREES					
Ar	5	Acer rubrum	Red Maple	Deciduous	1 1/2"– 2" CAL. B&B
Fa	5	Fraxinus americana	White Ash	Deciduous	1 1/2"– 2" CAL. B&B
Ns	6	Nyssa sylvatica	Black Gum	Deciduous	1 1/2"– 2" CAL. B&B
Qf	3	Quercus phellow	Willow Oak	Deciduous	1 1/2"– 2" CAL. B&B
SHRUBS					
Hv	7	Hamamelis virginiana	Witch–Hazel	Deciduous	24"–36" Ht. CONTAINER
Iv	15	Ilex verticillata	Winterberry	Evergreen	24"–36" Ht. CONTAINER
Lb	10	Lindera benzoin	Spicebush	Deciduous	24"–36" Ht. CONTAINER
Vd	9	Viburnum Dentatum	Southern Arrow–Wood Viburnum	Deciduous	24"–36" Ht. CONTAINER
HERBACEOUS SPECIES					
Aa	21	Agrostis alba	Red Top	Cut Back in Fall	1–3 Gal. Cont.
Dc	9	Deschampsia caespitosa	Tufted Hairgrass	Cut Back in Fall	1–3 Gal. Cont.
Pv	6	Panicum virgatum	Switch Grass	Cut Back in Fall	1–3 Gal. Cont.

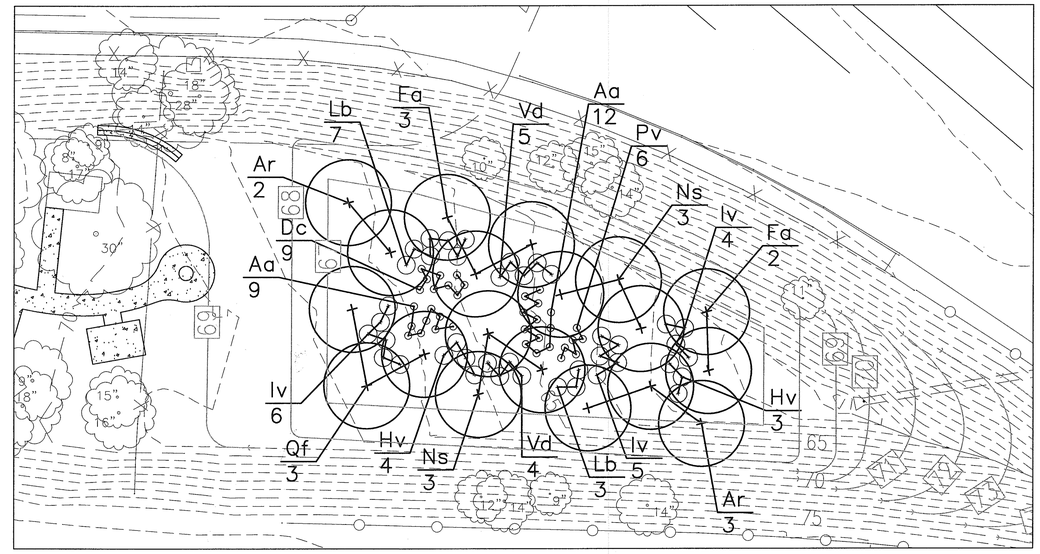

NORTH

BIO-RETENTION PLANTING PLAN

SCALE: 1'–20"

GRAPHIC SCALE
20' 0' 20' 40'
SCALE: 1" = 20'

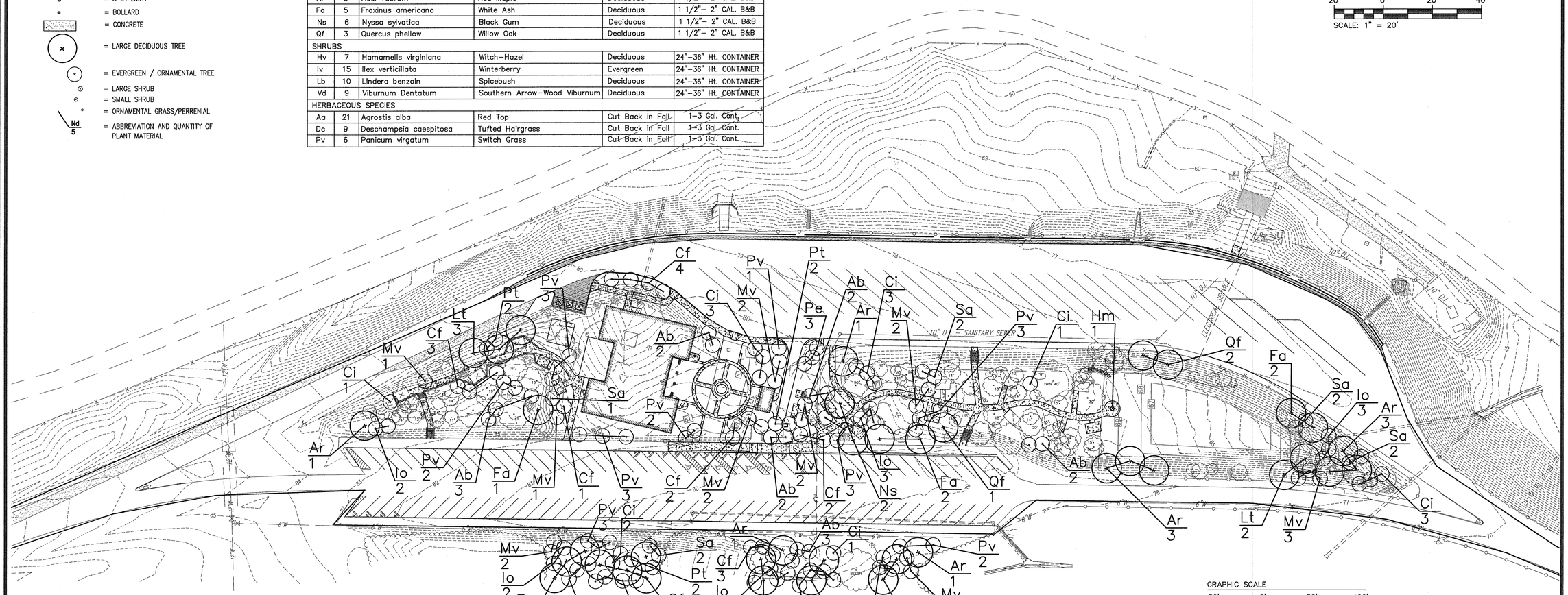

NORTH

LANDSCAPE PLAN

SCALE: 1'–50"

GRAPHIC SCALE
50' 0' 50' 100'
SCALE: 1" = 50'

ENGINEERS • ARCHITECTS • PLANNERS
DJG INC.
449 McLaws Circle, Williamsburg, VA 23185
Phone: 757.253.0673 Fax: 757.253.2319
Norfolk-Virginia Beach: 757.874.5015
www.djginc.com
COMMITTED TO EXCELLENCE

COMMONWEALTH OF VIRGINIA
MATTHEW JOSEPH GILLIGAN
No. 001264
8/3/06
CERTIFIED LANDSCAPE ARCHITECT

THIS DOCUMENT CONTAINS INFORMATION PROPRIETARY TO DJG, INC. AND IS FURNISHED IN CONFIDENCE, AN INSTRUMENT OF SERVICE, FOR THE LIMITED PURPOSE OF EVALUATION, BIDDING OR CONSTRUCTION WITH RESPECT TO THE PROJECT OR SITE IDENTIFIED HEREIN. IT MAY NOT BE USED IN WHOLE OR IN PART, OR THE MODIFICATION OF ANY DETAIL OR DESIGN WITHOUT THE EXPRESSED, WRITTEN CONSENT OF DJG, INC. ALL RIGHTS RESERVED. COPYRIGHT © 1996.

REVISIONS	
DATE	DESCRIPTION

LANDSCAPE PLAN

VIRGINIA DEPARTMENT OF TRANSPORTATION
NEW KENT SAFETY REST AREA AND INFORMATION CENTER
NEW KENT COUNTY, VIRGINIA

SCALE	AS NOTED
DESIGNED	MJG
DRAWN	MJG
CHECKED	KMS
DATE	8/3/06

COMMISSION NUMBER
2070030

SHEET NUMBER
L1

LEGEND

EXISTING:

- (E) = EXISTING
- P = ELECTRIC BOX
- = WATER VALVE
- = FIRE HYDRANT
- = LIGHT POLE (L.P.)
- = POWER POLE
- = GUY WIRE
- = BOLLARD
- = SIGN
- W = UNDERGROUND WATER LINE
- GAS = UNDERGROUND GAS LINE
- TEL = UNDERGROUND TELEPHONE LINE
- OHE = OVERHEAD POWER/CATV LINE(S)
- OHT = OVERHEAD TELEPHONE LINE(S)
- = FENCE
- = CENTERLINE OF DITCH
- 18"RCP = STORMWATER PIPES
- R/W = RIGHT-OF-WAY
- 280 = CONTOURS (FEET)
- = EXISTING TREE
- = TREELINE
- 12"W = EXISTING WATERLINE
- 8"PVC = EXISTING SANITARY SEWER LINE

PROPOSED:

- TYP. = TYPICAL
- R = RADIUS
- = HANDICAP ACCESSIBLE SPACE
- = SITE LIGHT
- = SPOT LIGHT
- = BOLLARD
- = CONCRETE
- = LARGE DECIDUOUS TREE
- = EVERGREEN / ORNAMENTAL TREE
- = LARGE SHRUB
- = SMALL SHRUB
- = ORNAMENTAL GRASS/PERRENIAL
- Nd 5 = ABBREVIATION AND QUANTITY OF PLANT MATERIAL
- = EDGE OF MULCH PLANTING BED
- = CRUSHED BRICK MULCH
- = GROUND COVER

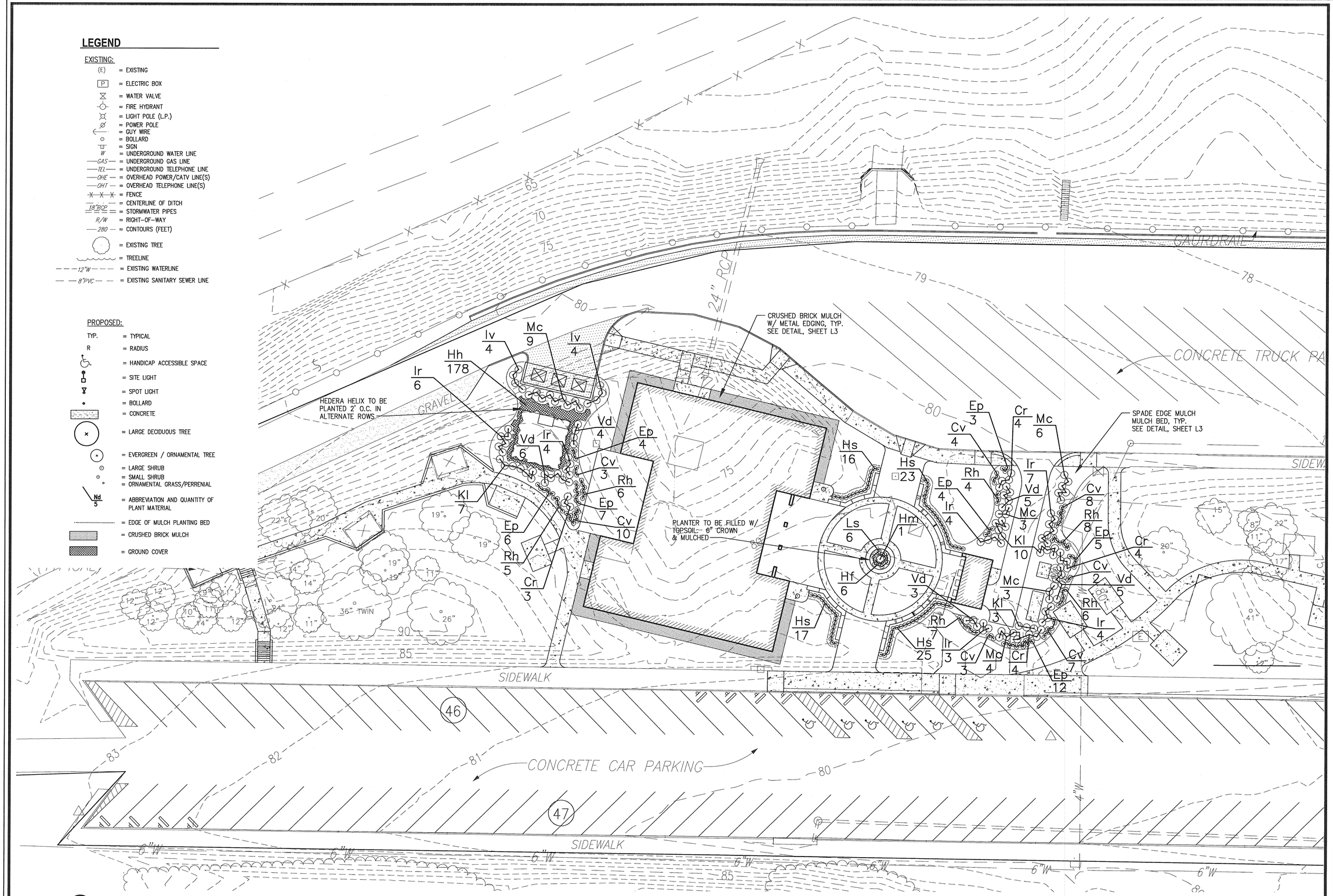

NORTH

ENLARGED LANDSCAPE PLAN

SCALE: 1'–20"

GRAPHIC SCALE

20' 0' 20' 40'

SCALE: 1" = 20'

ENGINEERS • ARCHITECTS • PLANNERS

DJG, INC.

449 McLaws Circle, Williamsburg, VA 23185
Phone: 757.253.0673 Fax: 757.253.2319
Norfolk-Virginia Beach: 757.874.5015
www.djginc.com

COMMITTED TO EXCELLENCE

COMMONWEALTH OF VIRGINIA
MATTHEW JOSEPH GILLIGAN
No. 001264
8/3/06
CERTIFIED LANDSCAPE ARCHITECT

REVISIONS

DATE	DESCRIPTION

THIS DOCUMENT CONTAINS INFORMATION PROPRIETARY TO DJG, INC. AND IS FURNISHED IN CONFIDENCE AS AN INSTRUMENT OF SERVICE FOR THE LIMITED PURPOSE OF EVALUATION, BIDDING OR CONSTRUCTION WITH RESPECT TO THE PROJECT OR SITE IDENTIFIED HEREIN. IT MAY NOT BE USED IN WHOLE OR IN PART OR THE MODIFICATION OF ANY DETAIL OR DESIGN WITHOUT THE EXPRESSED, WRITTEN CONSENT OF DJG, INC. ALL RIGHTS, INCLUDING COPYRIGHT, ARE RESERVED. COPYRIGHT © 2006

ENLARGED LANDSCAPE PLAN

VIRGINIA DEPARTMENT OF TRANSPORTATION
NEW KENT SAFETY REST AREA AND INFORMATION CENTER
NEW KENT COUNTY, VIRGINIA

SCALE	DESIGNED	DRAWN	CHECKED	DATE
AS NOTED	MJG	MJG	KMS	8/3/06

COMMISSION NUMBER
2070030

SHEET NUMBER
L2

LANDSCAPE PLAN NOTES:

1. ALL REQUIRED PLANTINGS SHALL CONFORM WITH THE MOST RECENT EDITION OF AMERICAN STANDARD FOR NURSERY STOCK, PUBLISHED BY THE AMERICAN ASSOCIATION OF NURSERYMEN, AND SHALL BE PLANTED IN ACCORDANCE WITH THE MOST RECENT EDITION OF "GUIDELINES FOR PLANTING LANDSCAPE TREES AND PLANTING AND CARE OF TREES AND SHRUBS", PUBLISHED BY THE VIRGINIA COOPERATIVE EXTENSION SERVICE.

2. THIS PROJECT PROPOSES TO REPLACE ALL EXISTING LAWN AREAS BETWEEN THE CAR AND TRUCK PARKING TO PROVIDE UNIFORMITY IN SEEDING MIXTURES, REPLENISHED TOPSOIL, AND REPAIR OF DAMAGED LAWN AREAS.
–AREAS WITH NO LAWN ARE TO BE BROUGHT TO A PROPER FINISH GRADE TO PROMOTE POSITIVE DRAINAGE AND GOOD ROOT HEALTH WITH ADDED TOPSOIL. TOPSOIL IS TO BE LIMED AND FERTILIZED BASED ON AGRONOMICAL ANALYSIS OF TOPSOIL, AGGRESSIVELY TILLED TO A DEPTH OF 4–6", FINE RACKED TO ACHIEVE FINISH GRADE, SEEDED W/ PERMANENT TURFGRASS SPECIFIED BELOW, LIGHTLY RAKED TO COVER SEED 1/4", MULCHED W/ CLEAN STRAW, AND WATERED TO MAINTAIN SURFACE MOISTURE FOR 30 DAYS FOLLOWING PLANTING.
–AREAS THAT MEET THE SPECIFICATION OF AN EXISTING STAND OF TURF ARE TO BE AERATED, LIMED AND FERTILIZED BASED ON AGRONOMICAL ANALYSIS OF TOPSOIL, SPARSE AREAS RAKED TO CREATE SEED BED 1/4" IN DEPTH, COVER–SEEDED W/ PERMANENT TURFGRASS SPECIFIED BELOW, LIGHTLY RAKED TO COVER SEED 1/4", AND WATERED TO MAINTAIN SURFACE MOISTURE FOR 30 DAYS FOLLOWING PLANTING.

3. WATER TO MEET STANDARD PLANTING SPECIFICATION AND THE ACT OF WATERING THE PROPOSED PLANT MATERIEL TO MEET SPECIFICATIONS IS PROVIDED BY THE CONTRACTOR. CONTRACTOR IS REQUIRED TO RE–SEED AREAS THAT DO NOT TAKE UNTIL THE LAWN AREA MEETS REQUIRED SPECIFICATIONS.

4. PERMANENT OR TEMPORARY SEEDING SHALL BE APPLIED TO DENUDED AREAS WITHIN 7 DAYS AFTER FINAL GRADE IS REACHED ON ANY PORTION OF THE SITE. TEMPORARY SEEDING SHALL BE APPLIED WITHIN 7 DAYS TO DENUDED AREAS THAT MAY NOT BE AT FINAL GRADE, BUT WILL REMAIN UNDISTURBED FOR LONGER THAN 30 DAYS. PERMANENT SEEDING SHALL BE APPLIED TO ALL AREAS THAT ARE NOT OTHERWISE PERMANENTLY STABILIZED OR ARE LEFT UNDISTURBED FOR MORE THAN ONE YEAR. APPLICATION OF LIME AND FERTILIZER SHALL BE BASED ON AGRONOMICAL ANALYSIS OF TOPSOIL FOR THE ENTIRE PROPERTY. SEEDED AREAS SHALL BE MULCHED WITH APPROVED MATERIALS.

5. GRASS TYPE SPECIFIED FOR FULL SUN TO PARTIAL SHADE IS 90% SEEDED TALL FESCUE VARIETIES AND 10% KENTUCKY BLUEGRASS VARIETIES: 90% TALL FESCUE IS TO BE CHOSEN FROM CATEGORY I FROM THE "2004–2005 VIRGINIA TURFGRASS VARIETY RECOMMENDATIONS" FOR SOUTHEASTERN VIRGINIA. 10% KENTUCKY BLUEGRASS IS TO BE CHOSEN FROM CATEGORY III UNDER TALL FESCUE. SINGLE VARIETIES GROWN ALONE ARE PREFERRED. SEE SPECIFICATIONS FOR DETAILED INSTALLATION INSTRUCTIONS.

6. GRASS TYPE SPECIFIED FOR FULL SHADE IS 65% SEEDED KENTUCKY BLUEGRASS CHOSEN FROM CATEGORY I AND 35% SHADE TOLERANT KENTUCKY BLUEGRASS CHOSEN FROM CATEGORY II VARIETIES. SEED VARIETIES IS TO BE CHOSEN FROM CATEGORY I FROM THE "2004–2005 VIRGINIA TURFGRASS VARIETY RECOMMENDATIONS" FOR SOUTHEASTERN VIRGINIA.

7. ALL TREES TO BE PRESERVED SHALL BE PROTECTED BEFORE, DURING AND AFTER THE DEVELOPMENT PROCESS IN ACCORDANCE WITH SPECIFICATIONS CONTAINED IN THE VIRGINIA EROSION & SEDIMENT CONTROL HANDBOOK.

8. A TEMPORARY FENCE WILL BE INSTALLED TO PROTECT THE TREES TO BE PRESERVED, BEFORE ANY CLEARING OR GRADING OF THE SITE.

9. MAINTENANCE OF LANDSCAPING WILL BE IN ACCORDANCE WITH THE VDOT STANDARDS.

10. AFTER PARKING LOT IS COMPLETE, AND PRIOR TO PLANT MATERIAL INSTALLATION, THE OWNER'S REPRESENTATIVE, THE CONTRACTOR, AND THE LANDSCAPE ARCHITECT SHALL WALK THE SITE FOR POTENTIAL MODIFICATIONS.

11. NO TREES, SHRUBS, STRUCTURES, FENCES OR OBSTACLES SHALL BE PLACED WITHIN AN EASEMENT WHICH WOULD RENDER THE EASEMENT INACCESSIBLE BY EQUIPMENT. SHRUBS SHALL BE 5 FEET, AND TREES A MINIMUM OF 10 FEET, FROM THE CENTER OF WATER AND SEWER PIPELINES.

12. CONTRACTOR IS RESPONSIBLE TO VERIFY ALL QUANTITIES AND DIMENSIONS AT THE SITE AND SHALL NOTIFY THE LANDSCAPE ARCHITECT OF ANY DISCREPANCIES.

13. CRUSHED BRICK MULCH IS TO BE RECOVERED OR RECYCLED FROM DEMOLITION OF EXISTING BRICK VENEER AND PAVERS FROM EXISTING BUILDINGS AND WALKWAYS.

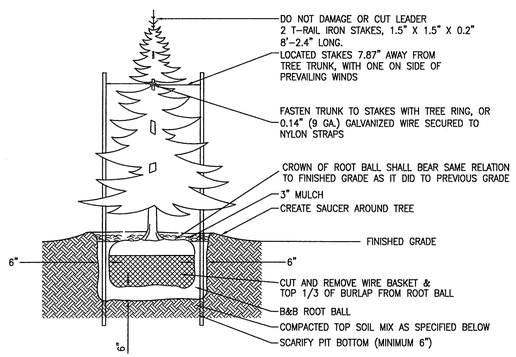

SPECIFICATIONS:
1. DO NOT DAMAGE MAIN ROOTS OR DESTROY ROOT BALL WHEN INSTALLING TREE STAKE.
2. WATER THOROUGHLY AFTER INSTALLATION.
3. REMOVE TREE RINGS AND STAKES TWO YEARS AFTER INSTALLATIONS
4. PROVIDED DRAINAGE FOR PLANTING PIT IN IMPERMEABLE SOIL.
5. TOPSOIL MIX, SEE SPEC.

CONIFEROUS TREE DETAIL
NOT TO SCALE

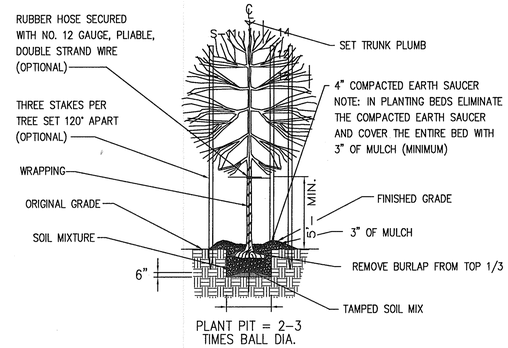

TREE PLANTING DETAIL
NOT TO SCALE

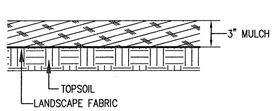

MULCHED BED SECTION
NOT TO SCALE

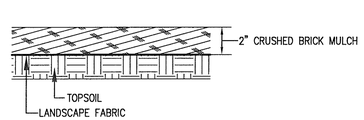

BRICK MULCH BED
NOT TO SCALE

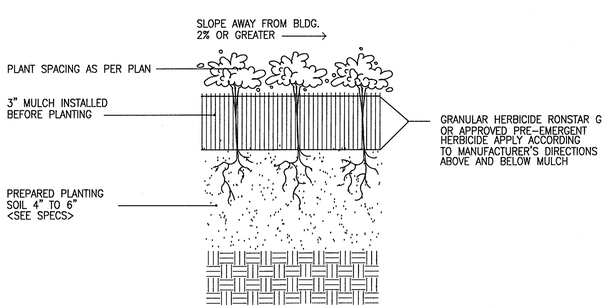

GROUND COVER / PERENNIAL PLANTING DETAIL
NOT TO SCALE

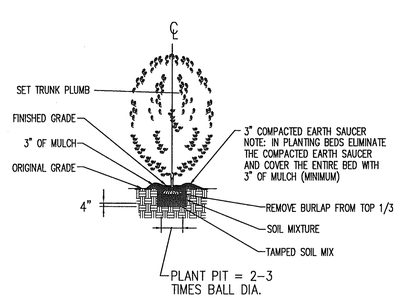

SHRUB PLANTING DETAIL
NOT TO SCALE

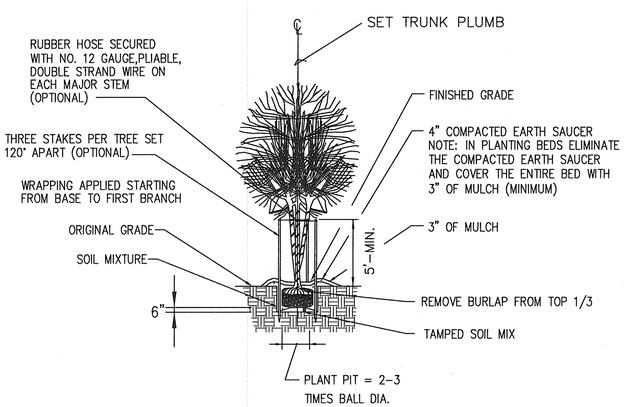

MULTI - STEM TREE PLANTING DETAIL
NOT TO SCALE

ENGINEERS • ARCHITECTS • PLANNERS
DJG INC.
449 McLaws Circle, Williamsburg, VA 23185
Phone: 757.253.0673 Fax: 757.253.2319
Norfolk-Virgina Beach: 757.874.5015
www.djginc.com
COMMITTED TO EXCELLENCE

COMMONWEALTH OF VIRGINIA
MATTHEW JOSEPH GILLIGAN
No. 001264
8/3/06
CERTIFIED LANDSCAPE ARCHITECT

THIS DOCUMENT CONTAINS INFORMATION PROPRIETARY TO DJG, INC. AND IS FURNISHED IN ACCEPTANCE FOR THE LIMITED PURPOSE OF EVALUATION, BIDDING AND/OR REVIEW. IT IS NOT TO BE REPRODUCED, USED OR DISCLOSED FOR ANY OTHER PURPOSE IN WHOLE OR IN PART OR THE MODIFICATION OF ANY DETAIL THEREOF, WITHOUT THE EXPRESSED, WRITTEN CONSENT OF DJG, INC. COPYRIGHT © 2006

REVISIONS		
	DATE	DESCRIPTION

LANDSCAPE NOTES & DETAILS

VIRGINIA DEPARTMENT OF TRANSPORTATION
NEW KENT SAFETY REST AREA AND INFORMATION CENTER
NEW KENT COUNTY, VIRGINIA

SCALE	DESIGNED	DRAWN	CHECKED	DATE
AS NOTED	MJG	MJG	KMS	8/3/06

COMMISSION NUMBER
2070030

SHEET NUMBER
L3

LEGEND

EXISTING:

- (E) = EXISTING
- P = ELECTRIC BOX
- = WATER VALVE
- = FIRE HYDRANT
- = LIGHT POLE (L.P.)
- = POWER POLE
- = GUY WIRE
- = BOLLARD
- = SIGN
- W = UNDERGROUND WATER LINE
- GAS = UNDERGROUND GAS LINE
- TEL = UNDERGROUND TELEPHONE LINE
- OHE = OVERHEAD POWER/CATV LINE(S)
- OHT = OVERHEAD TELEPHONE LINE(S)
- = FENCE
- = CENTERLINE OF DITCH
- 18"RCP = STORMWATER PIPES
- R/W = RIGHT-OF-WAY
- 280 = CONTOURS (FEET)
- = EXISTING TREE
- = TREELINE
- 12"W = EXISTING WATERLINE
- 8"PVC = EXISTING SANITARY SEWER LINE

PROPOSED:

- (TYP) = TYPICAL
- (TBR) = TO BE REMOVED
- = TO BE REMOVED
- = CONCRETE TO BE REMOVED
- = ASPHALT PAVEMENT TO BE REMOVED
- = PAVERS TO BE REMOVED
- = BRICK WALL TO BE REMOVED
- = CONTAMINATED SOIL TO BE REMOVED

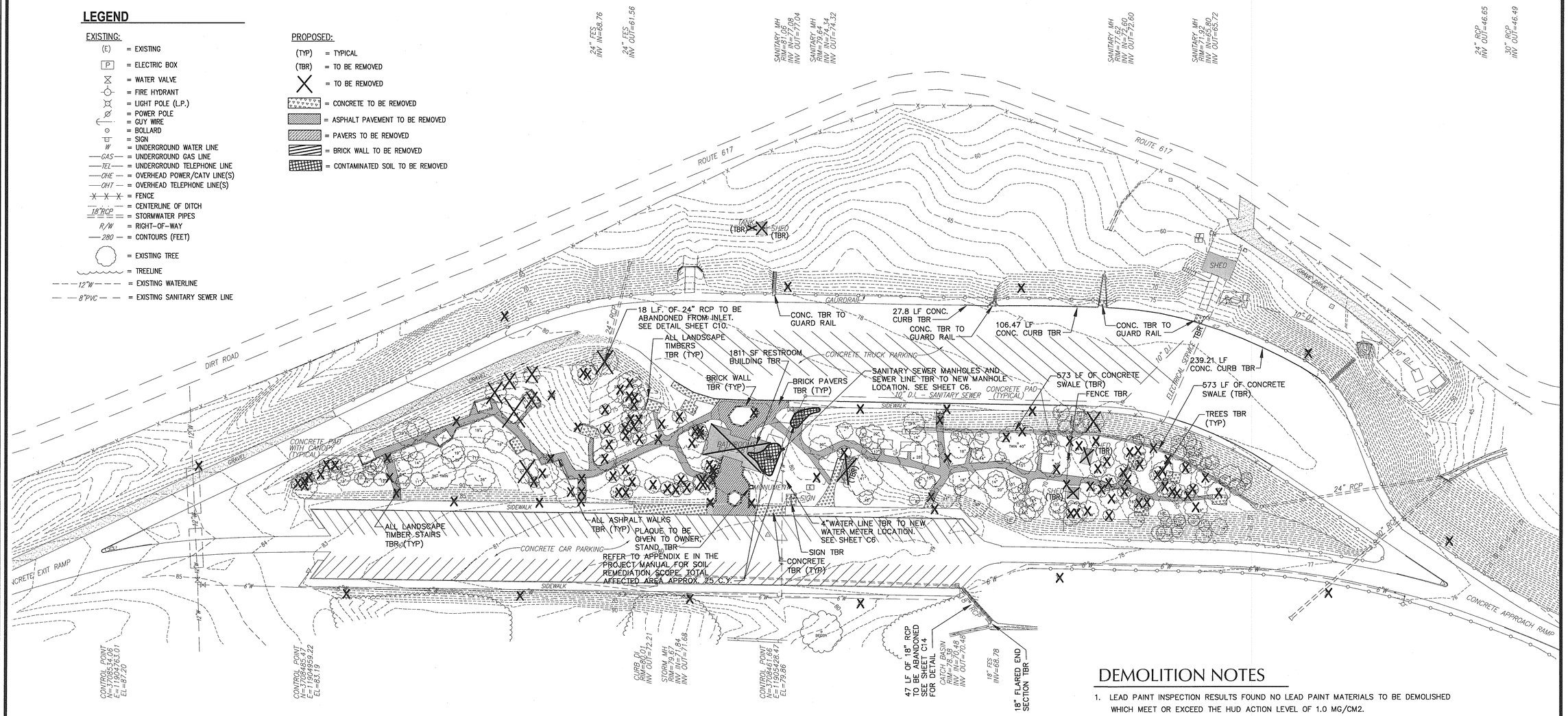

NORTH

DEMOLITION PLAN

SCALE: 1'-50"

GRAPHIC SCALE

50' 0' 50' 100'

SCALE: 1" = 50'

DEMOLITION NOTES

1. LEAD PAINT INSPECTION RESULTS FOUND NO LEAD PAINT MATERIALS TO BE DEMOLISHED WHICH MEET OR EXCEED THE HUD ACTION LEVEL OF 1.0 MG/CM2.
2. ASBESTOS SAMPLING RESULTS REPORTED 45 LINEAR FEET OF ASBESTOS-CONTAINING ROOF SEALANT FROM THE ROOF SYSTEM OF THE BRICK STORAGE BULDING #4275336. ASBESTOS WAS ALSO FOUND IN THE CAULKING FROM THE INTERIOR OF THE DOOR JAM OF THE PUMP AND WELL HOUSE #1, #4275358.
4. DISCONNECT AND REMOVE EXISTING BOXES, CONDUIT, AND WIRE FOR ELECTRICAL SERVICE FOR EXISTING REST AREA BUILDING. CONDUITS DIRECTLY BURIED IN EARTH MAY BE ABANDONED IN PLACE.
5. DISCONNECT AND REMOVE ALL EXISTING LIGHTING, EXCEPT FOR LIGHTING WITHIN FENCE OF GRINDER STATION.
6. ALL LANDSCAPE TIMBERS INCLUDING TIMBER STAIRS ARE TO BE REMOVED. TIMBER RETAINING WALL LOCATIONS THAT DO NOT INTERFERE WITH PROPOSED DESIGN WILL BE REPLACED WITH HARDSCAPE RETAINING WALL. SEE SITE PLAN FOR LOCATIONS.
7. WATER FOUNTAINS INTERFERING WITH PROPOSED CONSTRUCTION WILL BE RELOCATED. REFER TO SHEET C2 FOR WATER FOUNTAIN LOCATIONS. WATER FOUNTAINS WILL BE LOCATED CLOSE TO EXISTING WATER LINE VALVE BOXES.
8. EXISTING 4" WATER LINE TO BE REMOVED TO NEW WATER METER LOCATION. SHOWN ON SHEET C6. EXISTING 4" WATER LINE WILL SUPPLY EXISTING AND RELOCATED WATER FOUNTAINS. CAR PARKING PAVEMENT AND EXISTING SIDEWALK TO REMAIN UNDISTURBED.
9. EXISTING SANITARY SEWER MANHOLES AND SEWER LINE ARE TO BE REMOVED TO NEW MANHOLE LOCATION. SHOWN ON SHEET C6. PROPOSED SANITARY SEWER WILL TIE INTO THE EXISTING LINE.
10. UTILITIES SERVING STRUCTURES OTHER THAN THE MAIN BUILDING WILL BE CAPPED, SEALED, AND ABANDONED IN PLACE. ONLY TO BE REMOVED IF INTERFERRING WITH PROPOSED CONSTRUCTION.
11. BRICK VENEER FROM ALL BUILDINGS AND BRICK PAVERS TO BE CRUSHED AND REUSED AS BRICK MULCH AROUND BUILDING. RANGING IN SIZE FROM 0.25" – 2.0".
12. SLATE SHINGLES TO BE REUSED ON PROPOSED BUILDING ROOF.
13. METAL LIGHT POLES TO BE RECYCLED.
14. ALL ITEMS TO BE DEMOLISHED OR REMOVED SHALL BE DONE IN ACCORDANCE WITH ALL APPLICABLE STATE & FEDERAL REGULATIONS. ALL ITEMS ARE TO BE TRANSPORTED TO A STATE-APPROVED LANDFILL.
15. ALL STUMPS AND DEAD TREES WILL BE REMOVED.
16. EXISTING PICNIC TABLES TO BE RELOCATED. REFER TO SHHET C2 FOR PICNIC PAD LOCATIONS.
17. ALL EXISTING SIGNAGE TO BE REMOVED AND REPLACED WITH NEW. REFER TO SHEET C7 AND C8. FOR NEW LOCATIONS.

REST AREA BUILDING TBR #4275361

VENDING MACHINES TBR #4275386

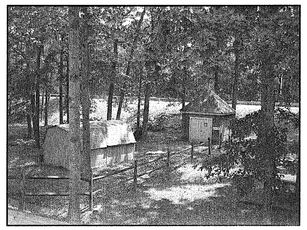

STORAGE SHEDS TBR #4275336

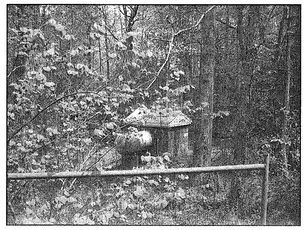

PUMP AND WELL HOUSE TBR #4275358

ENGINEERS • ARCHITECTS • PLANNERS

DJG INC.

448 McLaws Circle, Williamsburg, VA 23185
Phone: 757.253.0673 Fax: 757.253.2319
Norfolk-Virginia Beach: 757.874.5015
www.djginc.com

COMMITTED TO EXCELLENCE

COMMONWEALTH OF VIRGINIA
DANIEL J. DE YOUNG
No.3517
PROFESSIONAL ENGINEER
6-3-06

THIS DOCUMENT CONTAINS INFORMATION PROPRIETARY TO DJG, INC. AND IS FURNISHED IN CONFIDENCE AS AN INSTRUMENT OF SERVICE FOR THE LIMITED PURPOSE OF EVALUATION, BIDDING OR CONSTRUCTION. IT MAY NOT BE REPRODUCED OR DISTRIBUTED IN WHOLE OR IN PART OR THE MODIFICATION OF ANY DETAIL OR DESIGN WITHOUT THE EXPRESSED, WRITTEN CONSENT OF DJG, INC. ©2006, DJG INC. COPYRIGHT LITIGATION.

REVISIONS

DATE	DESCRIPTION

DEMOLITION PLAN

VIRGINIA DEPARTMENT OF TRANSPORTATION
NEW KENT SAFETY REST AREA AND INFORMATION CENTER
NEW KENT COUNTY, VIRGINIA

SCALE	AS NOTED
DESIGNED	MJG
DRAWN	MES
CHECKED	KMS
DATE	8/3/06

COMMISSION NUMBER
2070030

SHEET NUMBER
D1

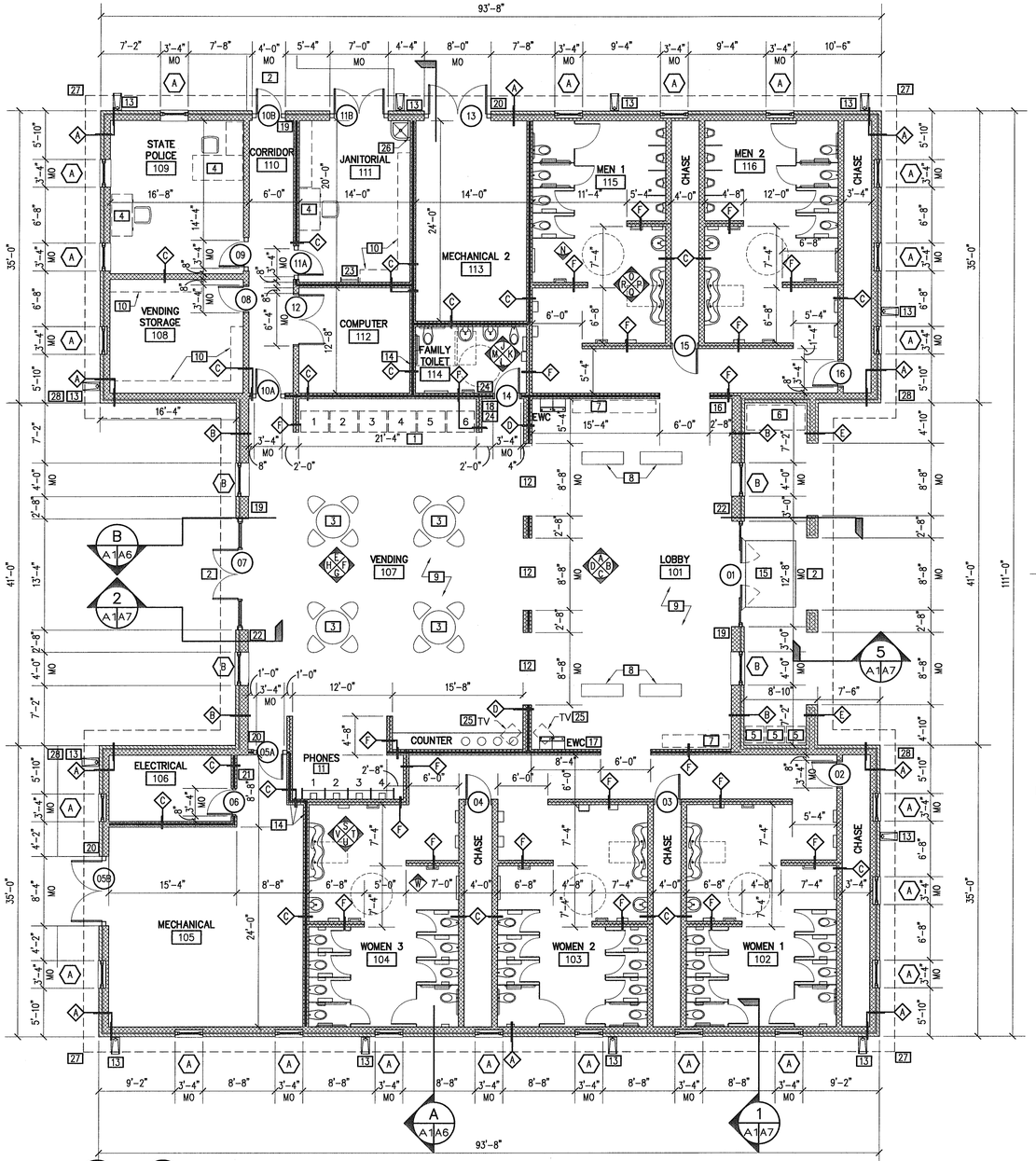

PROJECT NORTH TRUE NORTH

FLOOR PLAN (SHOWN ABOVE WATER TABLE)

SCALE: 1/8" = 1'-0" 9,058 G.S.F.

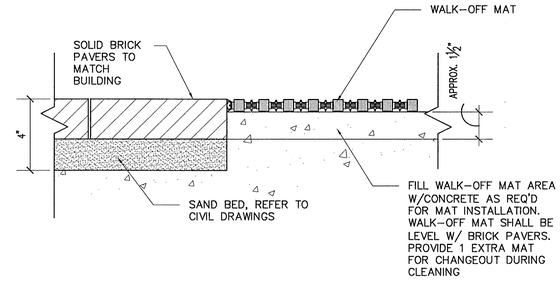

WALK-OFF MAT DETAIL

1 / A1A1 SCALE: 3"=1'-0"

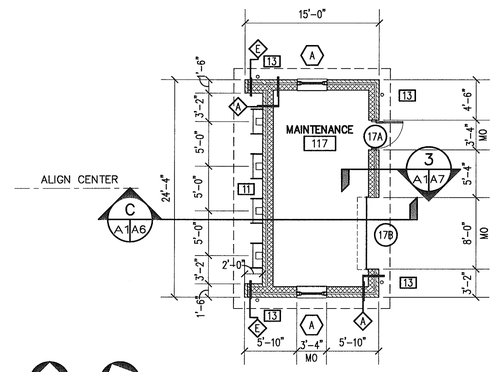

MAINTENANCE BUILDING

SCALE: 1/8" = 1'-0" 316 G.S.F.

GENERAL NOTES

1. ALL DIMENSIONS ARE TO FACE OF BLOCK OR FACE OF BRICK UON
2. REFER TO SHEET A10 FOR INTERIOR FINISHES
3. REFER TO SHEET A2 FOR CASED OPENING LOCATIONS.
4. REFER TO FP1 FOR FIRE EXTINGUISHER LOCATIONS

KEYNOTES

1. VENDING MACHINES, O.F.O.I.
2. HANDICAP ACCESSIBLE ENTRANCE
3. PREFABRICATED, PRE-FINISHED METAL DINING TABLES WITH INTEGRAL SEATING, BOLTED TO FLOOR.
4. WORK STATION, O.F.O.I.
5. NEWSPAPER DISPENSERS BY OTHERS
6. RECYCLING CENTER BY OTHERS (LEED ITEM)
7. DISPLAY AREA BY OTHERS
8. 18"D X 48"L BENCH SEATING
9. TERRAZZO FLOOR PATTERN- REFER TO SHEET A10
10. SHELVING BY OTHERS
11. TELEPHONE ENCLOSURES TYP. FOR 4. PAY TELEPHONES BY OTHERS.
12. CASED OPENING SEE DETAIL 1 & 2/A8
13. DOWNSPOUT, 4"ø COPPER W/SPLASH BLOCK, DOWNSPOUT COMES DOWN FROM ROOF AND TIES INTO 'FIRST FLUSH' SYSTEM THEN PICKS UP BELOW AND CONTINUES ON AND KICKS OUT ONTO SPLASH BLOCK
14. INTERIOR PARTITIONS WHERE INDICATED BY THIS NOTE SHALL TERMINATE @ UNDERSIDE OF ROOF TRUSS W/1½" PT WOOD PLATE – COORDINATE W/DRAFTSTOP LOCATIONS AND STRUCTURAL DRAWINGS. ALL OTHER INTERIOR PARTITIONS SHALL TERMINATE ON THE NEXT FULL BLOCK COURSE ABOVE THE FINISHED CEILING.
15. 8'-0"W X 6'-0"D WALK-OFF MAT, REFER TO 1/A1. (LEED ITEM)
16. SIGN TYPE A "MEN"
17. SIGN TYPE A "WOMEN"
18. SIGN TYPE A "FAMILY" "TOILET"
19. SIGN TYPE B "EXIT" (TACTILE EXIT SIGN)
20. SIGN TYPE B "MECHANICAL" "ROOM"
21. SIGN TYPE C "ELECTRICAL ROOM" "NO STORAGE ALLOWED"
22. OCCUPANCY SIGN, SEE SHEET FP1 FOR TYPE AND TEXT.
23. ATTIC ACCESS LADDER- PROVIDE 12' HIGH, WALL MOUNTED STEEL LADDER, FS INDUSTRIES MODEL F13S OR EQUAL WITH GREY POWDER COATED FINISH. MOUNT WITH BOTTOM RUNG AT +12" A.F.F.
24. SIGN TYPE C "FOR IMMEDIATE ASSISTANCE, USE INTERCOM OR CONTACT CUSTODIAL STAFF"
25. TV BRACKET: PEERLESS DS27 OR EQUAL, (TV BY OTHERS)
26. MOP AND BROOM HOLDER (BOBRICK MODEL: B-223x24, OR EQUAL), MOUNT AT 5'-0" AFF TO CENTER
27. LINE OF ROOF ABOVE
28. NO SMOKING SIGN- SEE DETAIL 2 THIS SHEET (LEED ITEM)

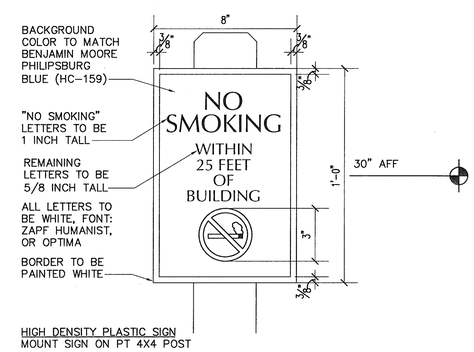

NO SMOKING SIGN

2 / A1A1 SCALE: 3"=1'-0"

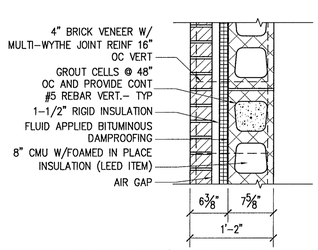

A MAS WALL - 8" CMU SCALE: 1"=1'-0" (ABOVE WATER TABLE)

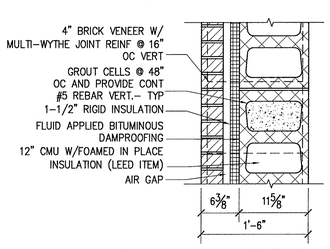

B MAS WALL - 12" CMU SCALE: 1"=1'-0" (ABOVE WATER TABLE)

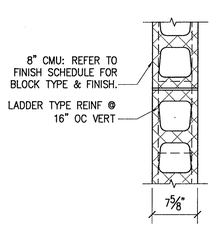

C 8" CMU WALL SCALE: 1"=1'-0"

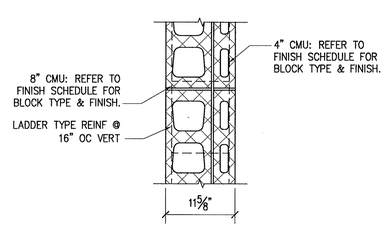

D 12" CMU WALL SCALE: 1"=1'-0"

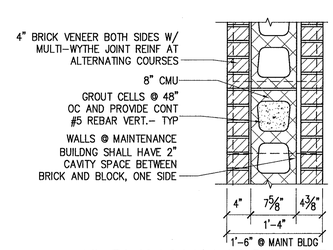

E 8" CMU W/ MAS FACE SCALE: 1"=1'-0"

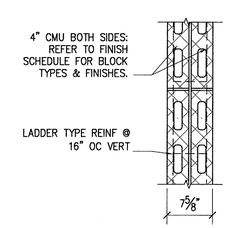

F DBL WYTHE CMU WALL SCALE: 1"=1'-0"

ENGINEERS • ARCHITECTS • PLANNERS
449 McLaws Circle, Williamsburg, VA 23185
Phone: 757.253.0673 Fax: 757.253.2319
Norfolk-Virginia Beach: 757.874.5015
www.dgainc.com
DGA INC.
COMMITTED TO EXCELLENCE

COMMONWEALTH OF VIRGINIA MATTHEW BOGDON BOOTON No. 011104 8/4/06 ARCHITECT

REVISIONS		
DATE	DESCRIPTION	

THIS DOCUMENT CONTAINS INFORMATION PROPRIETARY TO DJG, INC. IT IS TO BE USED ONLY FOR THE PURPOSE OF OBTAINING PERMITS AND REVIEW OR CONSTRUCTION OF A SPECIFIC PROJECT. REPRODUCTION IN WHOLE OR IN PART, OR DISCLOSURE TO OTHERS WITHOUT WRITTEN CONSENT OF DJG, INC. IS PROHIBITED. ALL RIGHTS RESERVED. COPYRIGHT (C) 2006.

FLOOR PLAN

VIRGINIA DEPARTMENT OF TRANSPORTATION
NEW KENT SAFETY REST AREA AND INFORMATION CENTER
NEW KENT COUNTY, VIRGINIA

SCALE	DESIGNED	DRAWN	CHECKED	DATE
AS NOTED	MGB	LJD	MGB	8/3/06

COMMISSION NUMBER **2070030**

SHEET NUMBER **A1**

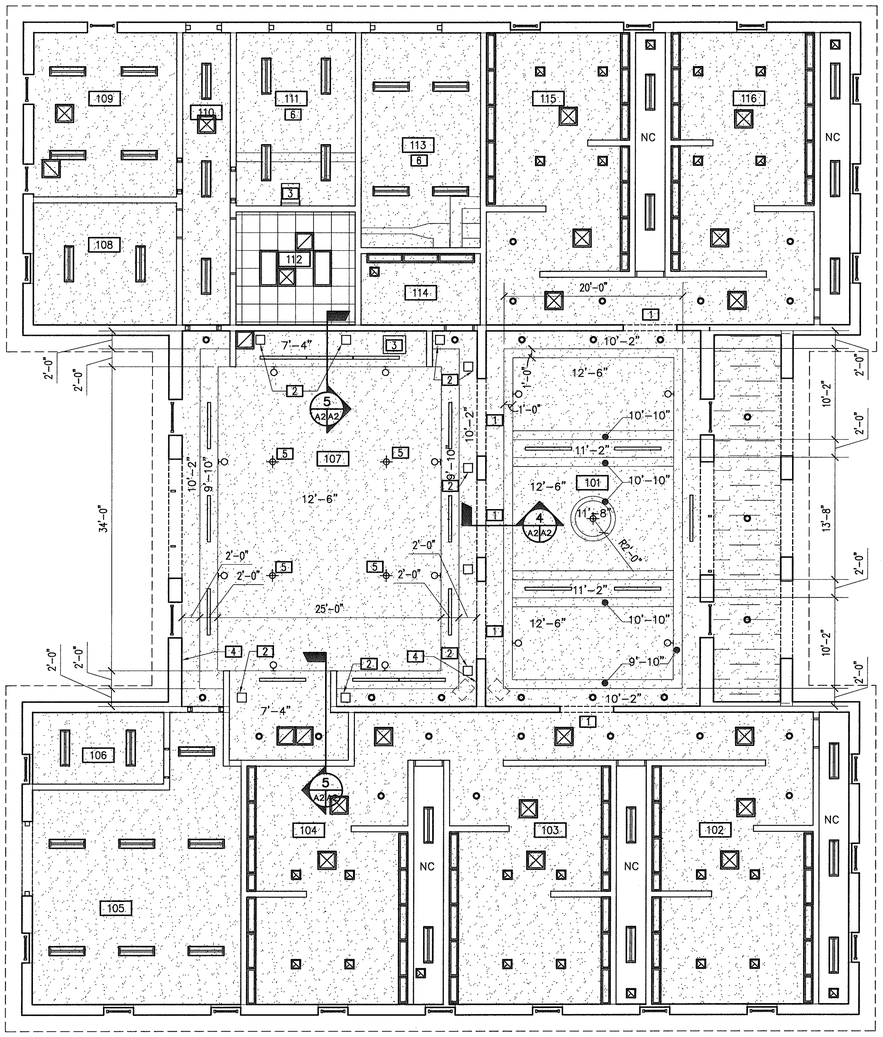

PROJECT NORTH TRUE NORTH

REFLECTED CEILING PLAN

SCALE: 1/8" = 1'-0"

LEGEND

- 5/8" GYPSUM BOARD ON SUSPENSION SYSTEM* AT INTERIOR CEILINGS – DETAIL 2/A2
- EXTERIOR 5/8" GYPSUM BOARD ON SUSPENSION SYSTEM* AT EXTERIOR CEILINGS – DETAIL 2/A2
- 2'X2' LAY-IN ACOUSTIC TILE CEILING SYSTEM. DETAIL 1/A2
- 2'X4' RECESSED FLUORESCENT LIGHT FIXTURE. SEE ELECTRICAL DWGS.
- 1'X4' RECESSED FLOURESCENT LIGHT FIXTURES. SEE ELECT. DWGS.
- 1'X3' RECESSED FLOURESCENT LIGHT FIXTURES. SEE ELECT. DWGS.
- 1'X2' RECESSED FLOURESCENT LIGHT FIXTURES. SEE ELECT. DWGS.
- 1'X4' SURFACE MOUNTED OR FLOURESCENT LIGHT FIXTURE. SEE ELECT. DWGS.
- CEILING ACCESS PANEL, SEE DETAIL 3/A2
- WALL MOUNTED FIXTURE. SEE ELECTRICAL DWGS.
- RECESSED FLUORESCENT OR INCANDESCENT LIGHT FIXTURE. SEE ELECT. DWGS.
- CEILING MOUNTED PENDANT FIXTURE. SEE ELECTRICAL DWGS.
- SUPPLY AIR DIFFUSER, SEE MECH. DWGS.
- RETURN AIR GRILLE, SEE MECH. DWGS.
- EXHAUST AIR GRILLE, SEE MECH. DWGS.

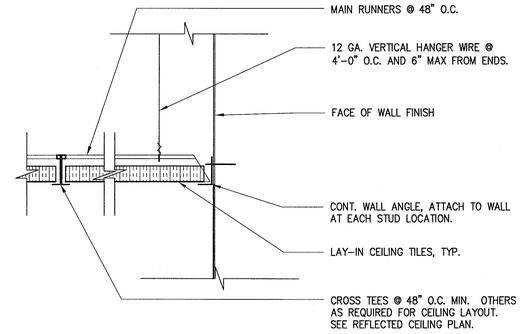

1 A2/A2 TYP. SUSPENDED LAY-IN TILE CEILING

SCALE: 3"=1'-0"

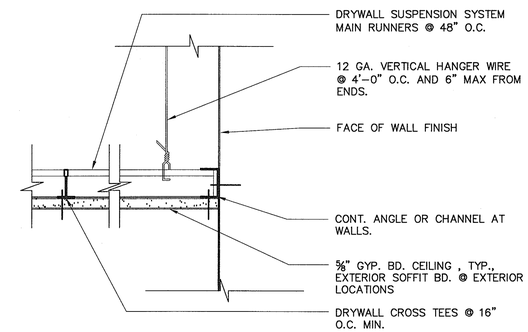

2 A2/A2 TYP. SUSPENDED GYP. BD. CEILING

SCALE: 3"=1'-0"

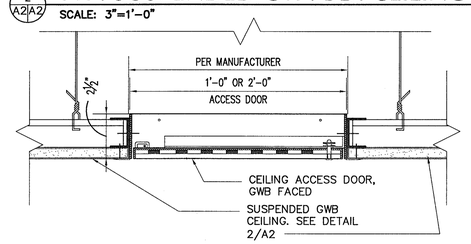

3 A2/A2 TYP. CEILING ACCESS PANEL

SCALE: 3"=1'-0"

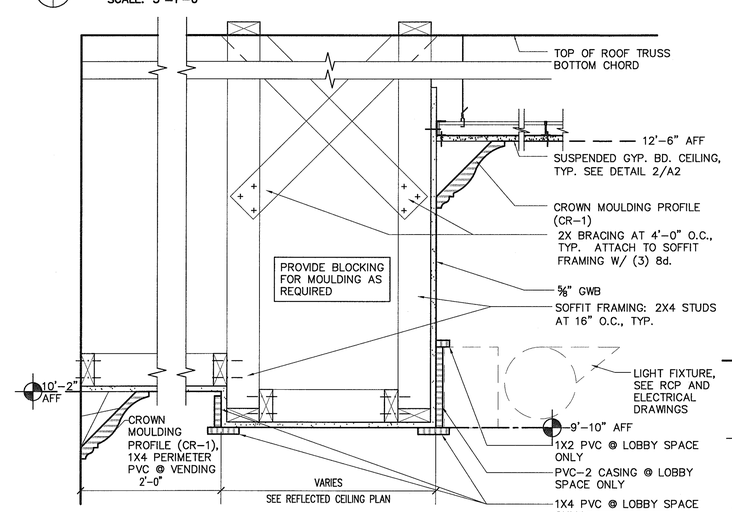

4 A2/A2 SOFFIT DETAIL

SCALE: 1 1/2"=1'-0"

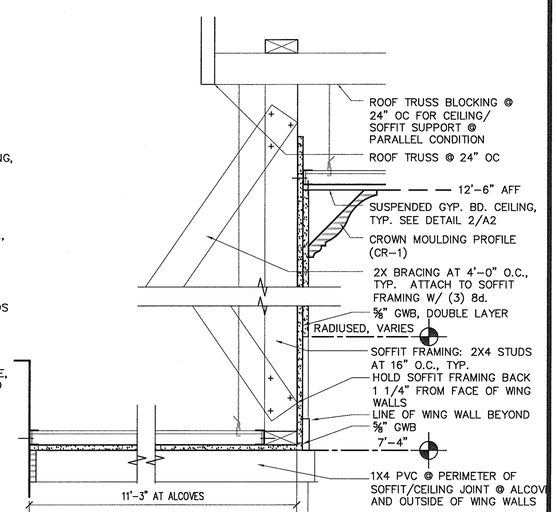

5 A2/A2 SOFFIT DETAIL @ VENDING ALCOVES

SCALE: 1 1/2"=1'-0"

GENERAL NOTES

1. ALL DIMENSIONS ARE TO FACE OF FINISH UON

KEYNOTES

1. CASED OPENING– SEE DETAILS 1 & 2/ A8
2. 12"X12" ACCESS PANEL– DETAIL 3/A2
3. 24"X30" ACCESS PANEL– DETAIL 3/A2
4. PROVIDE 1X4 PVC TRIM AROUND PERIMETER OF ROOM AT SOFFIT/ CMU TRANSITIONS
5. COORDINATE LIGHT FIXTURE LOCATION, TABLE PLACEMENT AND FLOOR PATTERN.

ENGINEERS • ARCHITECTS • PLANNERS
449 McLaws Circle, Williamsburg, VA 23185
Phone: 757.253.0673 Fax: 757.253.2319
Norfolk-Virginia Beach: 757.874.5015
www.dgainc.com
DGA INC.
COMMITTED TO EXCELLENCE

COMMONWEALTH OF VIRGINIA
MATTHEW GRAHAM BURTON
No. 011104
8/4/06
ARCHITECT

REVISIONS

DATE	DESCRIPTION

THIS DOCUMENT CONTAINS INFORMATION PROPRIETARY TO D.A.G., INC. AND IS FURNISHED IN CONFIDENCE FOR LIMITED PURPOSE AS AUTHORIZED BY THE ORIGINAL CONTRACT AND REVIEW, OR CONSTRUCTION OF A SPECIFIC PROJECT. REPRODUCTION OF THIS DOCUMENT IN WHOLE OR IN PART, OR USE FOR OTHER PURPOSES WITHOUT WRITTEN CONSENT OF D.A.G., INC. IS PROHIBITED. ALL RIGHTS RESERVED. COPYRIGHT (C) 2006.

REFLECTED CEILING PLAN

VIRGINIA DEPARTMENT OF TRANSPORTATION
NEW KENT SAFETY REST AREA AND INFORMATION CENTER
NEW KENT COUNTY, VIRGINIA

SCALE	DESIGNED	DRAWN	CHECKED	DATE
AS NOTED	MGB	LJD	MGB	8/3/06

COMMISSION NUMBER
2070030

SHEET NUMBER
A2

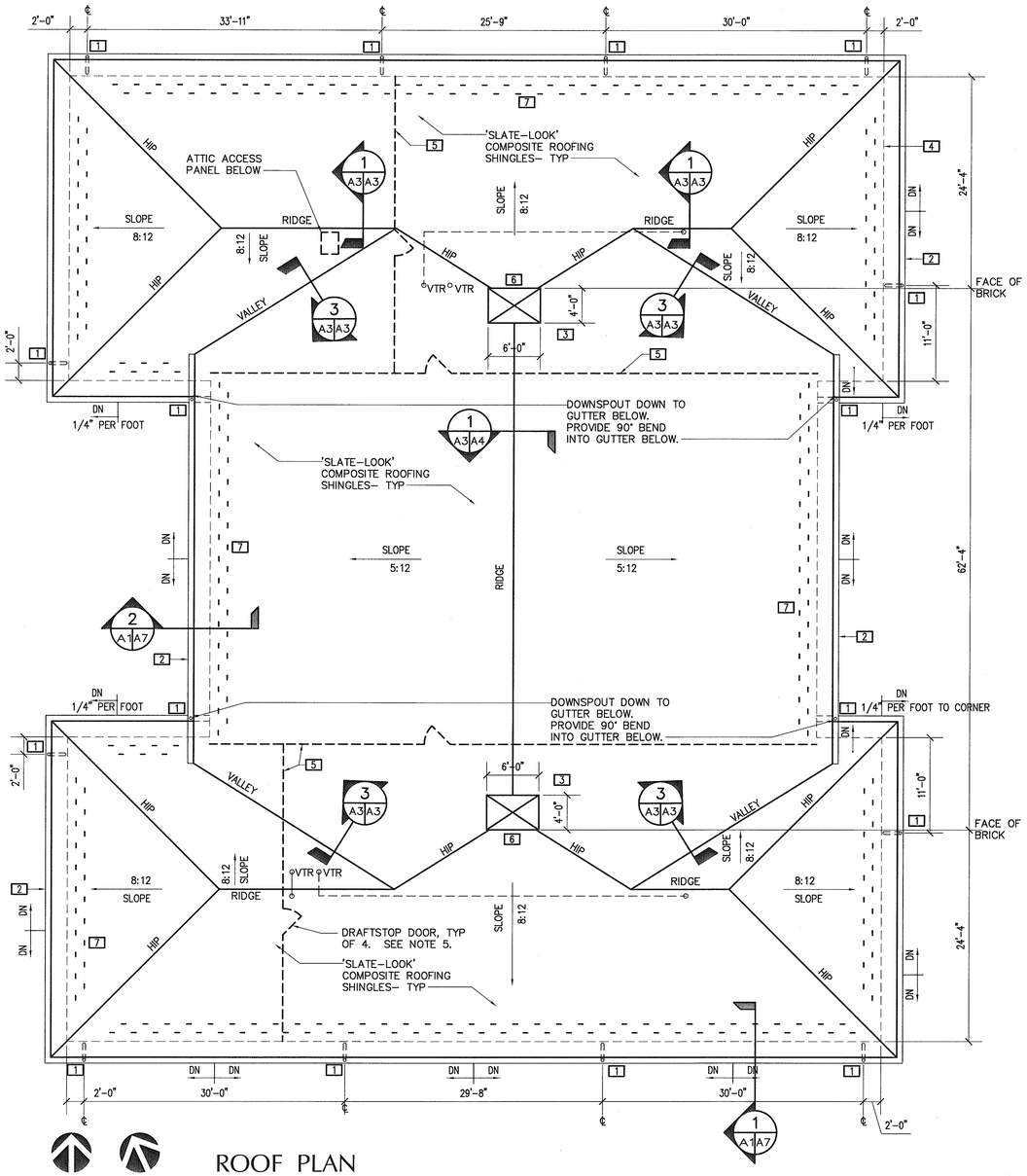

ROOF PLAN

SCALE: 1/8" = 1'-0"

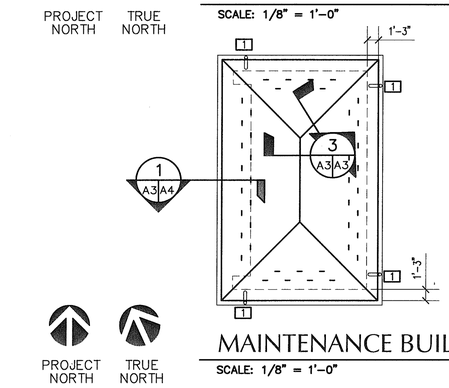

MAINTENANCE BUILDING ROOF PLAN

SCALE: 1/8" = 1'-0"

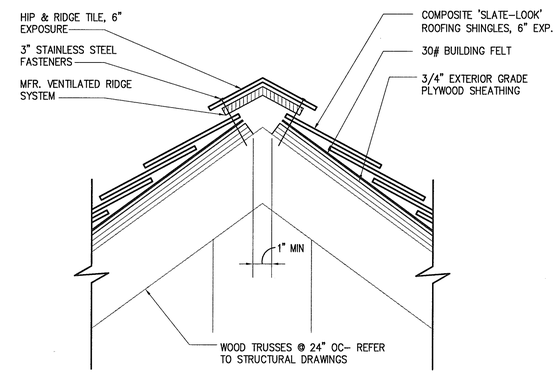

HIP & RIDGE DETAIL

SCALE: 3"=1'-0"

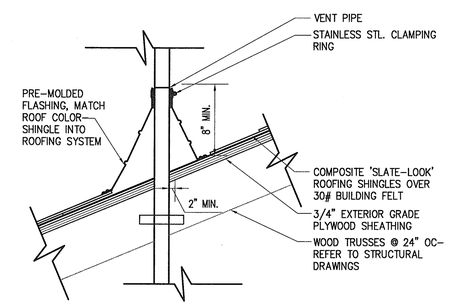

VTR DETAIL

SCALE: 1 1/2"=1'-0"

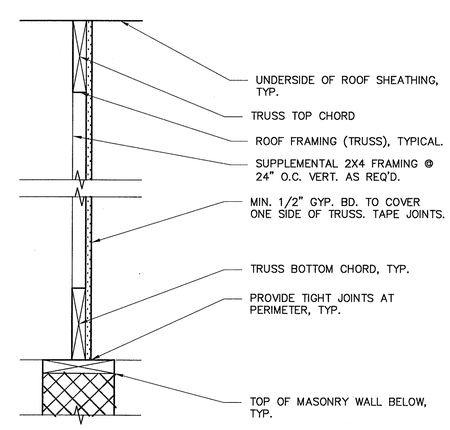

TYPICAL DRAFT STOP

NOT TO SCALE

d-draftstop

GENERAL NOTES

1. ALL DIMENSIONS ARE TO FACE OF BRICK OR FACE OF STUD UON

KEYNOTES

1. 4" ROUND COPPER DOWNSPOUT LOCATION – PROVIDE SMACNA 1-35J ATTACHMENT @ 4' O.C. VERT
2. 8"ø- 1/2 ROUND COPPER GUTTER W/CAST BRACKETS 3' O.C. GUTTER SLOPES 1/8:12 UON ON PLAN
3. DIMENSIONS ARE TO FACE OF CHIMNEY BRICK
4. LINE OF BRICK WALL BELOW
5. LINE OF DRAFTSTOP LIMITS- EXTEND FROM TOP OF WALL BELOW TO UNDERSIDE OF ROOF DECK- DRAFSTOP SHALL CONSIST OF MIN. 1/2" GYPSUM BOARD ADEQUATELY FASTENED TO THE ADJACENT TRUSS AND CREATING A SOLID AIR FLOW BARRIER FROM ONE SECTION TO THE NEXT WITHOUT GAPS. INFILL TRUSS FRAMING AND SPACE BETWEEN TOP OF WALL AND BOTTOM CHORD OF TRUSS WITH 2X4 (FRAMED FLAT) TO ALLOW DRAFTSTOP MATERIALS TO BE SUPPORTED AT ALL EDGES AND AT MAX. 24" O.C. VERT. PROVIDE A FRAMED OPENING WITH A 3/8" PLYWOOD, SELF-CLOSING DOOR (3' WIDE X 4' HIGH) FOR EACH DRAFTSTOP WALL WHERE SHOWN. EXACT PLACEMENT SHALL BE COINCIDENT WITH THE SPACES BETWEEN TRUSS MEMBERS. SEE DETAIL 5, THIS SHEET.
6. REFER TO A5 AND S3 FOR CHIMNEY DETAIL.
7. COPPER SNOW GUARDS, INSTALL (2) ROWS 12" APART WITH BOTTOM ROW APPROXIMATELY 24" FROM ROOF EDGE. SPACE GUARDS APPROXIMATELY 24" O.C., WITH ROWS STAGGERED 12". EXACT SPACING TO COORDINATE W/ WIDTH OF SLATES AND EXPOSURE. SNOW GUARDS SHALL BE INSTALLED AROUND ENTIRE ROOF PERIMETER AS SHOWN.

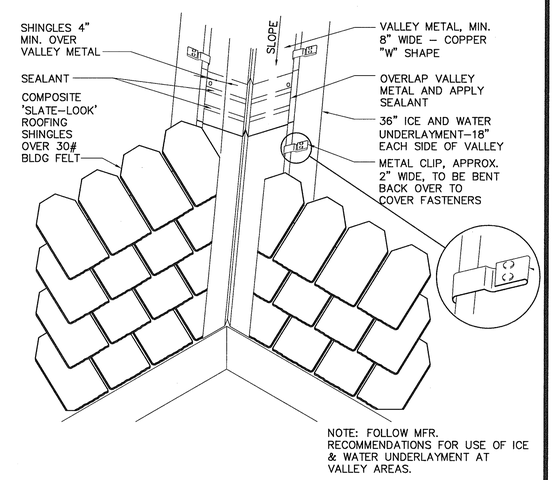

VALLEY DETAIL

SCALE: 1"=1'-0"

ENGINEERS • ARCHITECTS • PLANNERS
449 McLaws Circle, Williamsburg, VA 23185
Phone: 757.253.0673 Fax: 757.253.2319
Norfolk-Virginia Beach: 757.874.5015
www.dgjinc.com
DJG INC.
COMMITTED TO EXCELLENCE

COMMONWEALTH OF VIRGINIA
MATTHEW GORDON BURTON
No. 011104
8/2/06
ARCHITECT

REVISIONS		
△	DATE	DESCRIPTION

THIS DOCUMENT CONTAINS INFORMATION PROPRIETARY TO D.J.G., INC. AND IS FURNISHED IN CONFIDENCE FOR THE LIMITED PURPOSE OF REVIEW AND REVIEW OF CONSTRUCTION OF A SPECIFIC PROJECT. REPRODUCTION OF THIS DOCUMENT IN WHOLE OR IN PART OR THE DISCLOSURE OF ITS CONTENTS WITHOUT WRITTEN CONSENT OF D.J.G., INC. IS PROHIBITED. COPYRIGHT (C) 2006. ALL RIGHTS RESERVED.

ROOF PLAN AND DETAILS

VIRGINIA DEPARTMENT OF TRANSPORTATION
NEW KENT SAFETY REST AREA AND INFORMATION CENTER
NEW KENT COUNTY, VIRGINIA

SCALE	DESIGNED	DRAWN	CHECKED	DATE
AS NOTED	MGB	LJD	MGB	8/3/06

COMMISSION NUMBER
2070030

SHEET NUMBER
A3

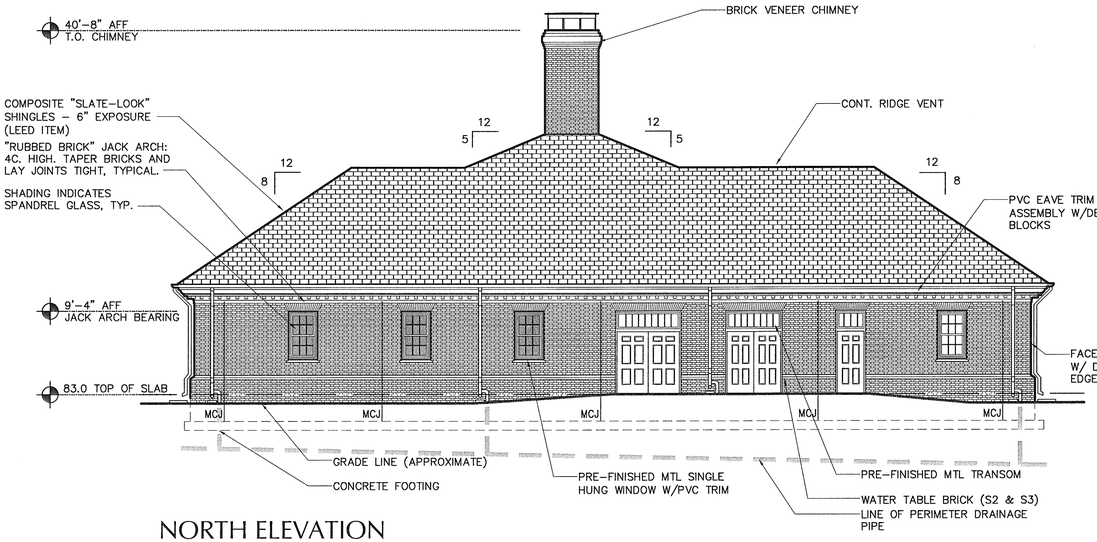

NORTH ELEVATION

SCALE: 1/8" = 1'-0"

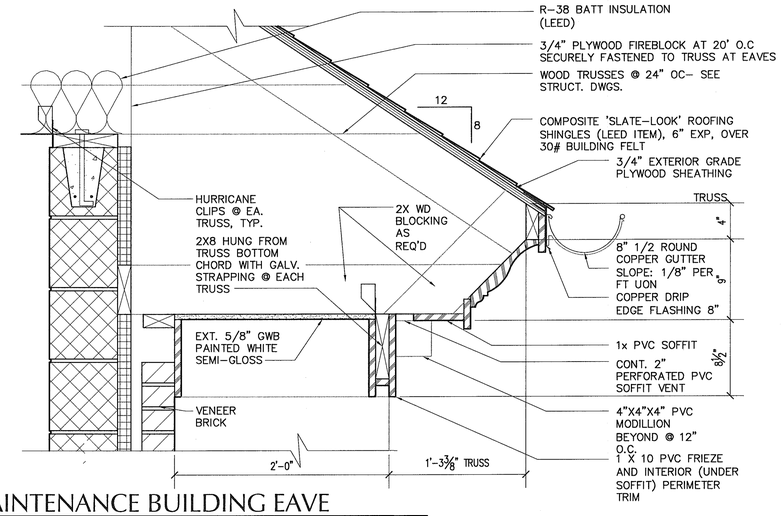

MAINTENANCE BUILDING EAVE

1 / A3|A4

SCALE: 1 1/2"=1'-0"

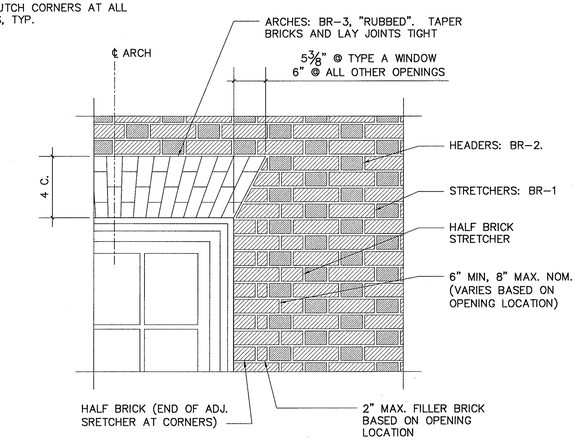

BRICK DETAILING

2 / A4|A4

SCALE: 1"=1'-0"

d-brick detailing

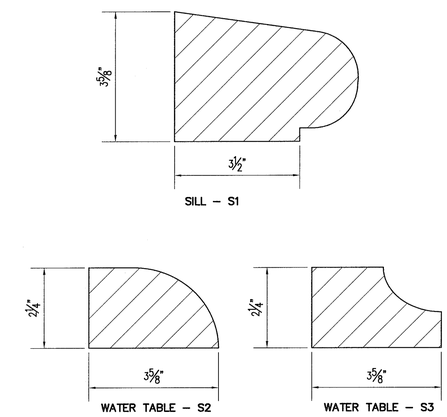

BRICK PROFILES

3 / A4|A4

SCALE: 6"=1'-0"

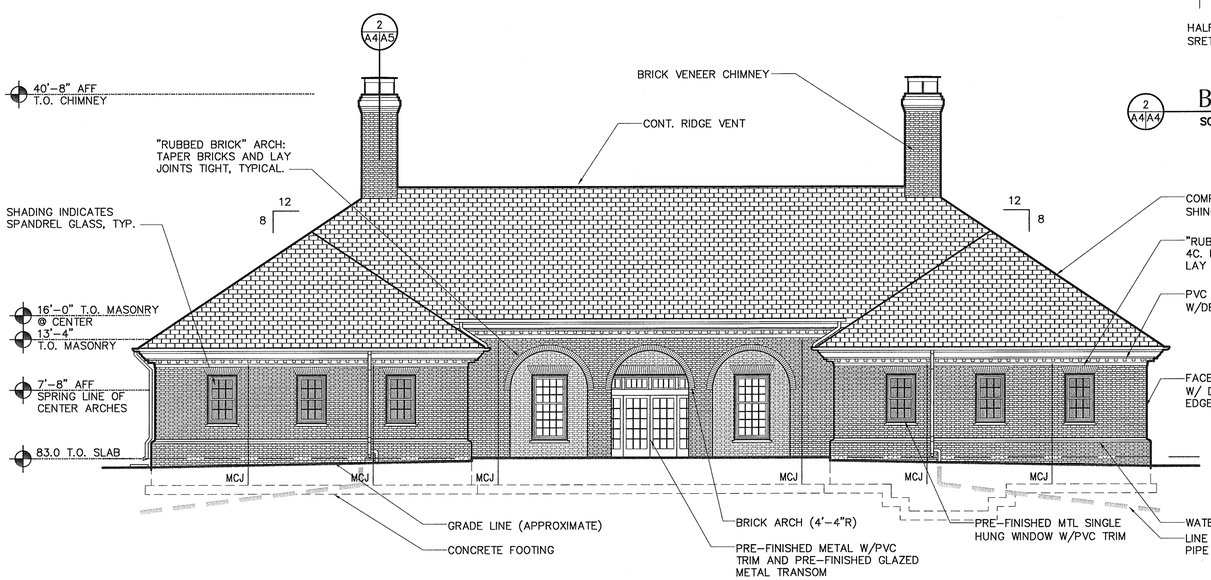

EAST ELEVATION

SCALE: 1/8" = 1'-0"

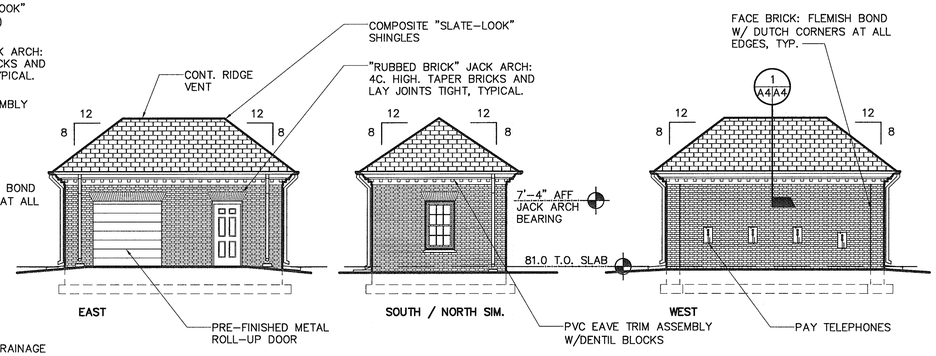

MAINTENANCE BLDG ELEVATIONS

SCALE: 1/8" = 1'-0"

ENGINEERS • ARCHITECTS • PLANNERS

DJG INC.

449 McLaws Circle, Williamsburg, VA 23185
Phone: 757.253.0673 Fax: 757.253.2319
Norfolk, Virginia Beach: 757.874.3015
www.djginc.com

COMMITTED TO EXCELLENCE

COMMONWEALTH OF VIRGINIA
MATTHEW GORDON BOTTICH
No. 011104
ARCHITECT

REVISIONS

DATE	DESCRIPTION

THIS DOCUMENT CONTAINS INFORMATION PROPRIETARY TO DJG, INC AND IS FURNISHED IN CONFIDENCE FOR THE LIMITED PURPOSE OF REVIEW IN CONNECTION WITH THE SPECIFIC PROJECT. REPRODUCTION OF THIS DOCUMENT, IN WHOLE OR IN PART, OR DISCLOSURE TO OTHERS IS NOT PERMITTED WITHOUT WRITTEN CONSENT OF DJG, INC. IS PROHIBITED. ALL RIGHTS RESERVED. COPYRIGHT (C) 2006.

EXTERIOR ELEVATIONS

VIRGINIA DEPARTMENT OF TRANSPORTATION

NEW KENT SAFETY REST AREA AND INFORMATION CENTER

NEW KENT COUNTY, VIRGINIA

SCALE	DESIGNED	DRAWN	CHECKED	DATE
AS NOTED	MGB	LJD	MGB	8/3/06

COMMISSION NUMBER **2070030**

SHEET NUMBER **A4**

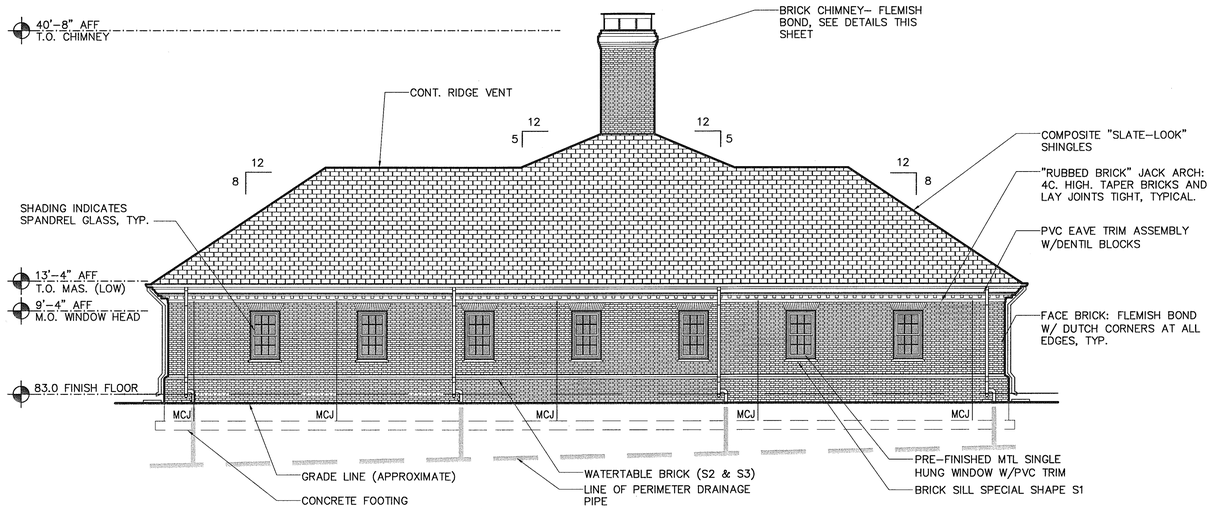

SOUTH ELEVATION

SCALE: 1/8" = 1'-0"

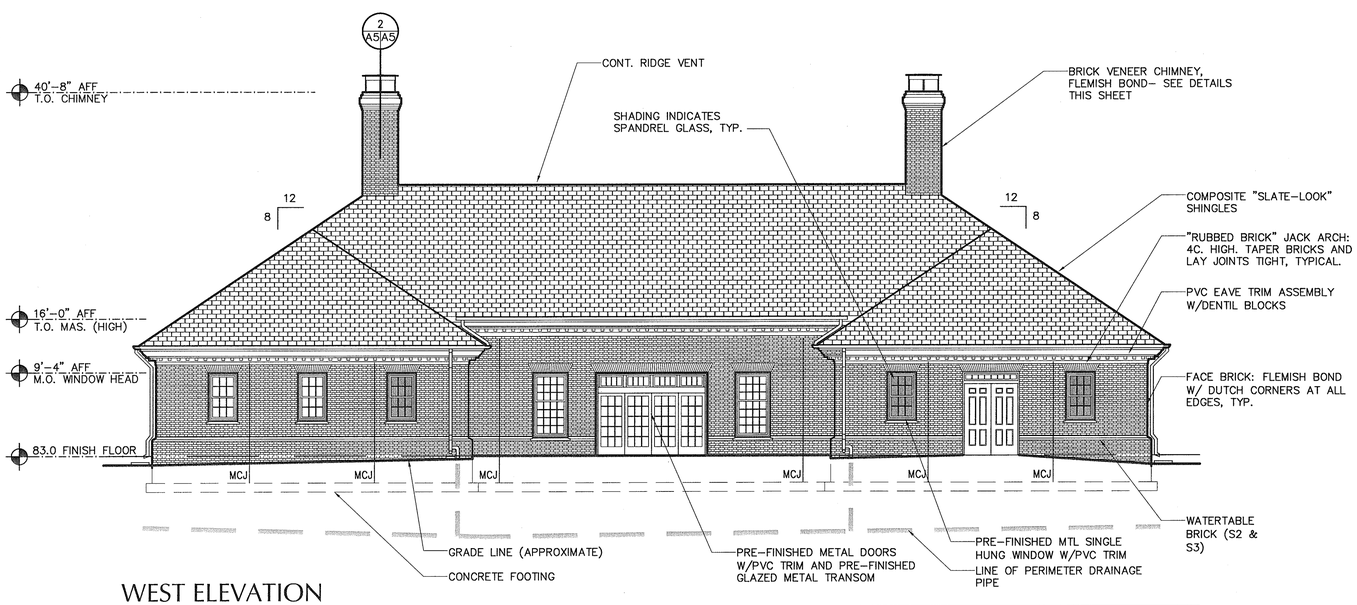

WEST ELEVATION

SCALE: 1/8" = 1'-0"

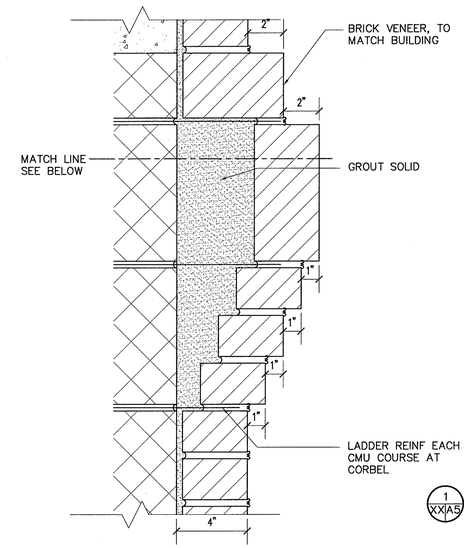

PROFILE CORBEL BELOW CAP

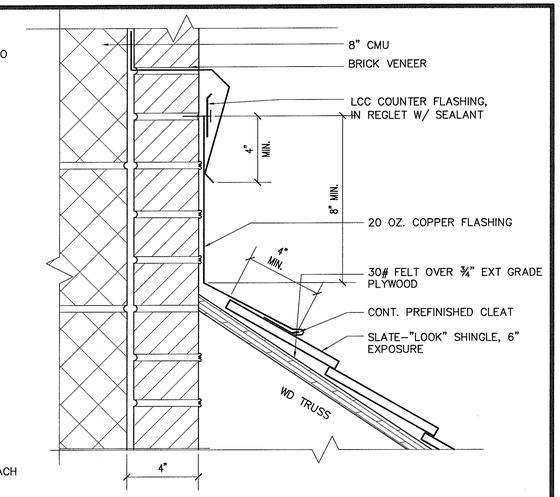

1 XX|A5 FLASHING DETAIL @ CHIMNEY

SCALE: 3"=1'-0"

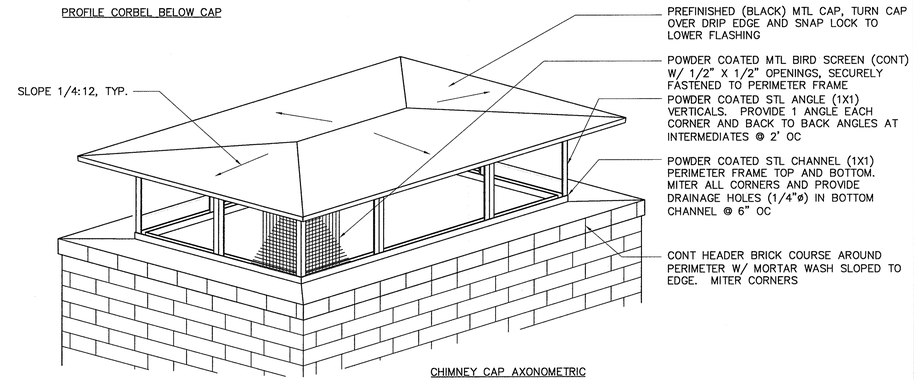

CHIMNEY CAP AXONOMETRIC

SCALE: NTS

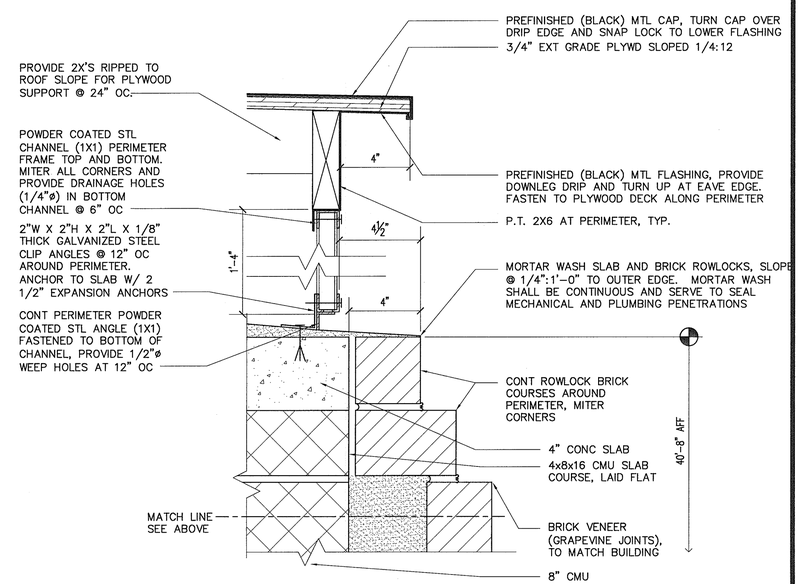

2 XX|A5 CHIMNEY CAP SECTION

SCALE: 3"=1'-0"

ENGINEERS • ARCHITECTS • PLANNERS
DJG INC.
449 McLaws Circle, Williamsburg, VA 23185
Phone: 757.253.0673 Fax: 757.253.2319
Norfolk-Virginia Beach: 757.874.5015
www.djginc.com
COMMITTED TO EXCELLENCE

COMMONWEALTH OF VIRGINIA
MATTHEW GORDON GUTTON
No. 011104
ARCHITECT

REVISIONS		
△	DATE	DESCRIPTION

THIS DOCUMENT CONTAINS INFORMATION PROPRIETARY TO DJG, INC. AND IS FURNISHED IN CONFIDENCE AND SUBJECT TO RETURN UPON REQUEST. IT IS TO BE USED ONLY FOR REVIEW, OR CONSTRUCTION OF A SPECIFIC PROJECT. REPRODUCTION OF THIS DOCUMENT, WHOLE OR IN PART, OR DISCLOSURE TO OTHERS WITHOUT THE WRITTEN CONSENT OF DJG, INC. IS PROHIBITED. ALL RIGHTS RESERVED. COPYRIGHT (C) 2006.

EXTERIOR ELEVATIONS

VIRGINIA DEPARTMENT OF TRANSPORTATION
NEW KENT SAFETY REST AREA AND INFORMATION CENTER
NEW KENT COUNTY, VIRGINIA

SCALE	DESIGNED	DRAWN	CHECKED	DATE
AS NOTED	MGB	LJD	MGB	8/3/06

COMMISSION NUMBER
2070030

SHEET NUMBER
A5

GENERAL NOTES

1. ALL DIMENSIONS ARE TO FACE OF STUD OR CMU UON
2. REFER TO SPECIFICATIONS FOR ATTIC INSULATION SUPPORT

KEYNOTES

1. LINE OF DRAFTSTOPPING SEE NOTE ON SHEET A3
2. OPENING BEYOND IN DRAFTSTOP SEE NOTE ON SHEET A3

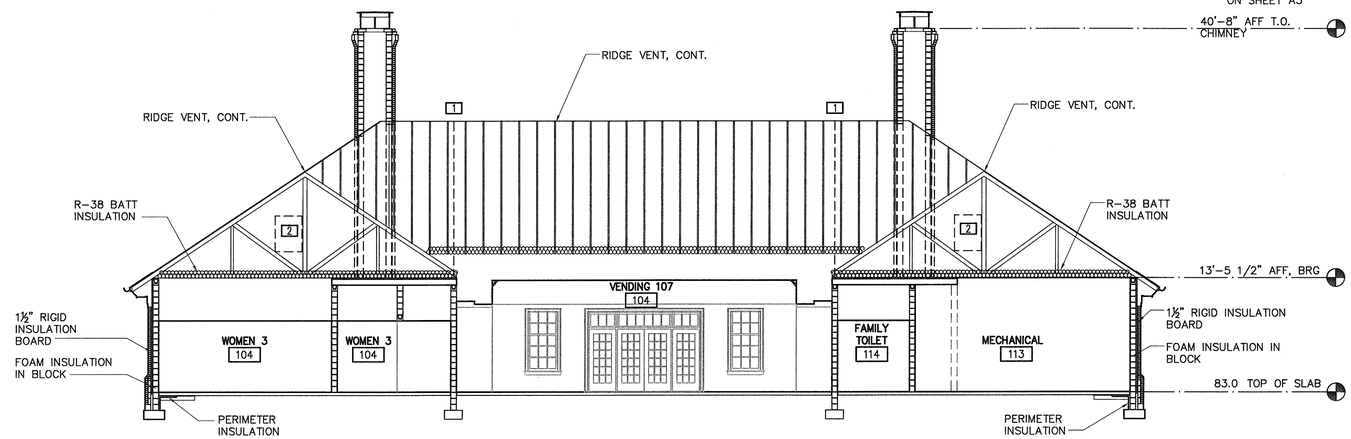

A/A6 NORTH-SOUTH BUILDING SECTION

SCALE: 1/8" = 1'-0"

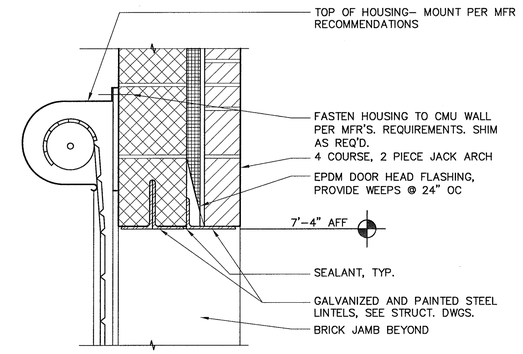

1/A6/A6 PUSH-UP OVERHEAD DOOR (HEAD)

SCALE: 1 1/2"=1'-0"

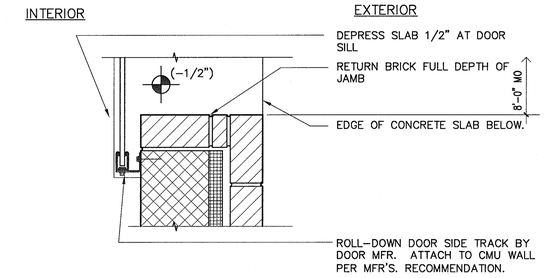

2/A6/A6 PUSH-UP OVERHEAD DOOR (JAMB)

SCALE: 1 1/2"=1'-0"

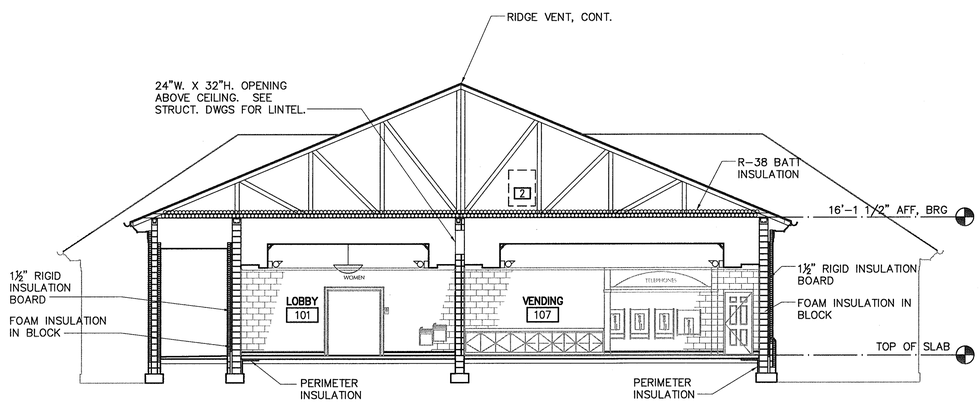

B/A1/A6 EAST-WEST BUILDING SECTION

SCALE: 1/8" = 1'-0"

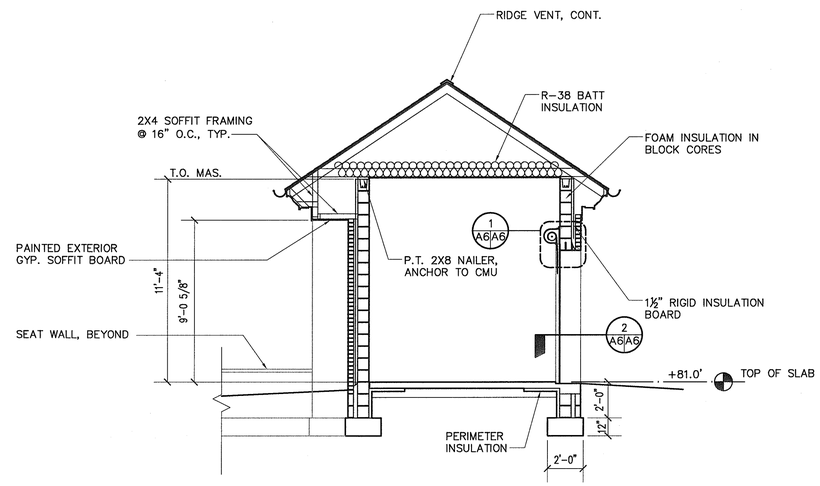

C/A1/A6 MAINTENANCE BUILDING SECTION

SCALE: 1/4" = 1'-0"

ENGINEERS • ARCHITECTS • PLANNERS
449 McLaws Circle, Williamsburg, VA 23185
Phone: 757.253.0673 Fax: 757.253.2319
Norfolk-Virginia Beach: 757.874.5015
www.dgainc.com
COMMITTED TO EXCELLENCE

COMMONWEALTH OF VIRGINIA
MATTHEW GORDON BURTON
No. 011104
8/2/06
ARCHITECT

THIS DOCUMENT CONTAINS INFORMATION PROPRIETARY TO D.G.A., INC., AND IS FURNISHED IN CONFIDENCE AND MAY NOT BE DISCLOSED TO OTHERS OR USED FOR ANY PURPOSE OTHER THAN THE CONSTRUCTION OF A SPECIFIC PROJECT. REPRODUCTION OF THIS DOCUMENT, IN WHOLE OR IN PART, WITHOUT THE WRITTEN CONSENT OF D.G.A., INC. IS PROHIBITED. ALL RIGHTS RESERVED. COPYRIGHT (C) 2006.

REVISIONS		
	DATE	DESCRIPTION

BUILDING SECTIONS

VIRGINIA DEPARTMENT OF TRANSPORTATION
NEW KENT SAFETY REST AREA AND INFORMATION CENTER
NEW KENT COUNTY, VIRGINIA

SCALE	DESIGNED	DRAWN	CHECKED	DATE
AS NOTED	MGB	LJD	MGB	8/3/06

COMMISSION NUMBER
2070030

SHEET NUMBER
A6

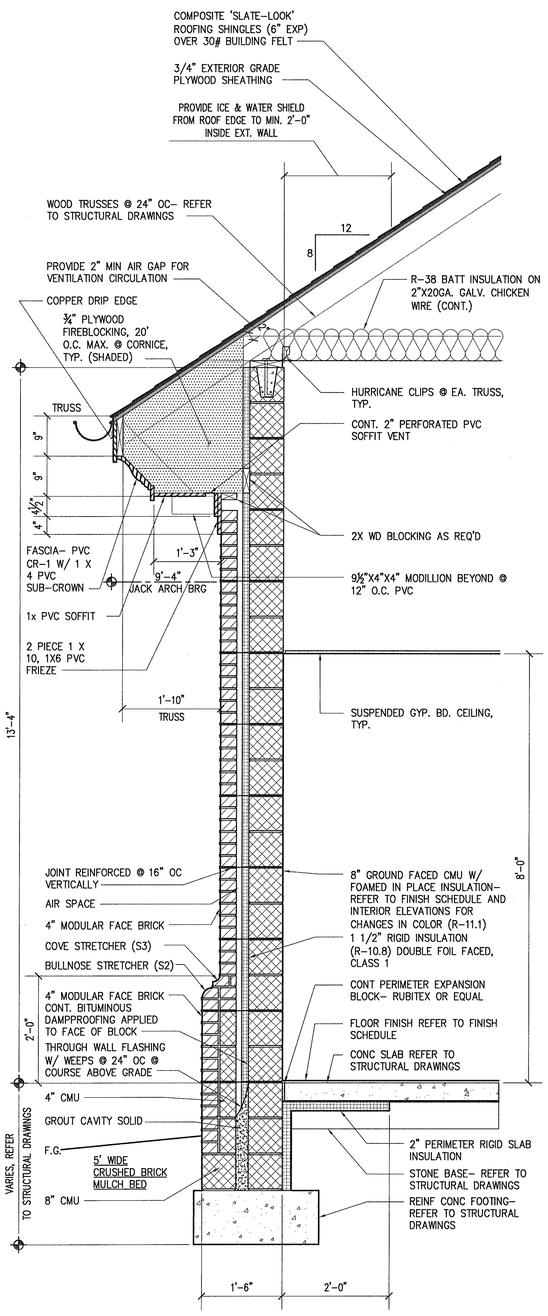

1 A1 A7 TYPICAL WALL SECTION ROOF 8:12

SCALE: 3/4"=1'-0"

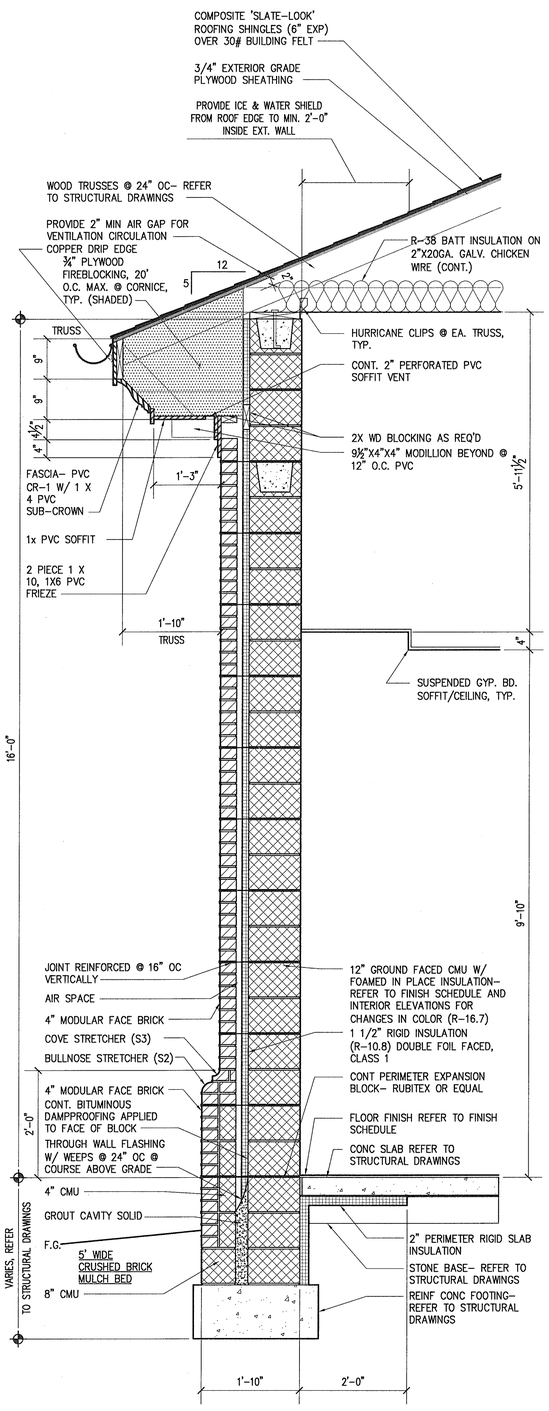

2 A1 A7 TYPICAL WALL SECTION ROOF 5:12

SCALE: 3/4"=1'-0"

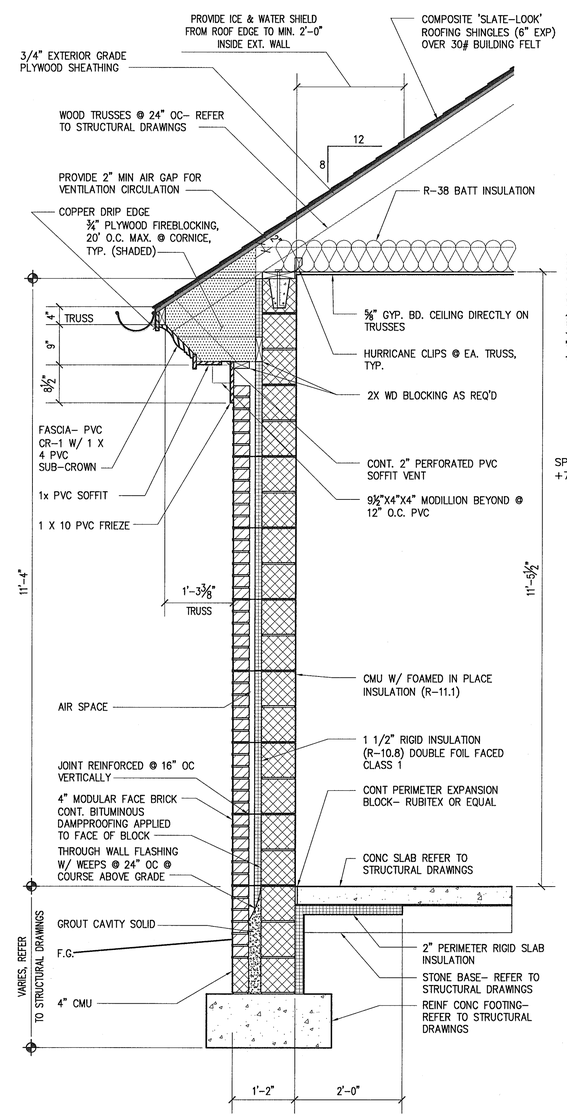

3 A1 A7 MAINTENANCE BLDG. WALL SECTION

SCALE: 3/4"=1'-0"

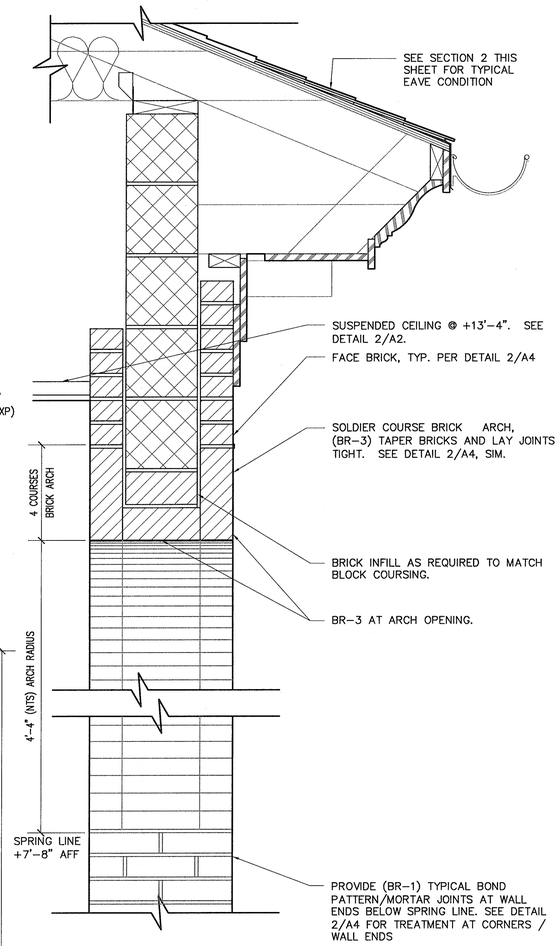

5 A1 A7 ARCHED OPENING DETAIL

SCALE: 1 1/2"=1'-0"

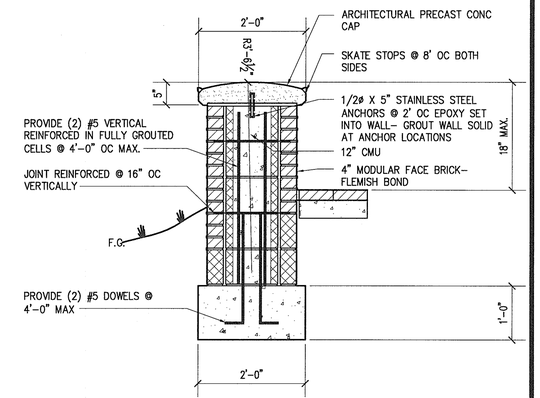

4 C3 A7 LOW SEATING WALL SECTION

SCALE: 3/4"=1'-0"

ENGINEERS • ARCHITECTS • PLANNERS
DJG INC.
449 McLaws Circle, Williamsburg, VA 23185
Phone: 757.253.0673 Fax: 757.253.2319
Norfolk-Virginia Beach: 757.874.5015
www.djginc.com
COMMITTED TO EXCELLENCE

COMMONWEALTH OF VIRGINIA
No. 011104
9-30-06
ARCHITECT

THIS DOCUMENT CONTAINS INFORMATION PROPRIETARY TO DJG, INC. AND IS FURNISHED IN CONFIDENCE AND SUBJECT TO RETURN UPON REQUEST. IT IS TO BE USED ONLY FOR REVIEW OR CONSTRUCTION OF A SPECIFIC PROJECT. REPRODUCTION OF THIS DOCUMENT, IN WHOLE OR IN PART, OR DISCLOSURE TO OTHERS WITHOUT THE WRITTEN CONSENT OF DJG, INC. IS PROHIBITED. COPYRIGHT (C) 2006. ALL RIGHTS RESERVED.

REVISIONS

DATE	DESCRIPTION

WALL SECTIONS

VIRGINIA DEPARTMENT OF TRANSPORTATION
NEW KENT SAFETY REST AREA AND INFORMATION CENTER
NEW KENT COUNTY, VIRGINIA

SCALE	DESIGNED	DRAWN	CHECKED	DATE
AS NOTED	MGB	LJD	MGB	8/3/06

COMMISSION NUMBER
2070030

SHEET NUMBER
A7

DOOR AND FRAME SCHEDULE

MARK	DOOR Elev	DOOR MATL	DOOR FINISH	SIZE WD	SIZE HGT	SIZE THK	FRAME MATL	FRAME FINISH	EL	DETAIL HEAD	DETAIL JAMB	DETAIL THRESH	HDWR SET	NOTES	
01	G	PAL	F.F.	12'-0"	9'-0"	1 3/4"	PAL	F.F.	–	1/A9 SIM	9/A9 SIM	3/A8	1	AUTOMATIC BI-PARTING DOOR W/ GLAZED TRANSOM	3
02	B	IHM	P-3	3'-0"	7'-0"	1 3/4"	HM	P-1	F5	6/A9	6/A9	4/A8	2		
03	B	IHM	P-3	3'-0"	7'-0"	1 3/4"	HM	P-1	F5	6/A9	6/A9	4/A8	2		
04	B	IHM	P-3	3'-0"	7'-0"	1 3/4"	HM	P-1	F5	6/A9	6/A9	4/A8	2		
05A	B	IHM	P-2	3'-0"	7'-0"	1 3/4"	HM	P-1	F5	6/A9	6/A9	4/A8	3		
05B	A	IHM	P-1/ P-2	7'-4"	8'-0"	1 3/4"	HM	P-1	F3	1/A9	9/A9	3/A8	11	W/ 1'-0" H GLAZED TRANSOM W/O FRAME	1
06	C	IHM	P-2	3'-0"	7'-0"	1 3/4"	HM	P-1	F5	2/A9	2/A9	–	5		
07	F	PAL	P-1/ P-2	6'-0"	7'-0"	1 3/4"	PAL	F.F.	F4	1/A9	9/A9	3/A8	6	PROVIDE (2) 3'-0" X 7'-0" FIXED PANELS AND GLAZED TRANSOM.	
08	B	IHM	P-2	3'-0"	7'-0"	1 3/4"	HM	P-1	F5	2/A9	2/A9	–	7		
09	B	IHM	P-2	3'-0"	7'-0"	1 3/4"	HM	P-1	F5	2/A9	2/A9	–	7		
10A	B	IHM	P-2	3'-0"	7'-0"	1 3/4"	HM	P-1	F5	6/A9	6/A9	4/A8	7		
10B	B	IHM	P-1/ P-2	3'-0"	7'-0"	1 3/4"	HM	P-1	F1	1/A9	9/A9	3/A8	9	W/ 2'-0" GLAZED TRANSOM	1
11A	B	IHM	P-2	3'-0"	7'-0"	1 3/4"	HM	P-1	F5	2/A9	2/A9	–	7		
11B	A	IHM	P-1/ P-2	6'-0"	7'-0"	1 3/4"	HM	P-1	F2	1/A9	9/A9	3/A8	4	W/ 2'-0" GLAZED TRANSOM	1
12	D	IHM	P-2	6'-0"	7'-0"	1 3/4"	HM	P-1	F6	2/A9	2/A9	–	10		
13	A	IHM	P-1/P-2	7'-0"	7'-0"	1 3/4"	HM	P-1	F3	1/A9	9/A9	3/A8	11		1
14	B	IHM	P-2/ P-3	3'-0"	7'-0"	1 3/4"	HM	P-1	F5	6/A9	6/A9	4/A8	2		2
15	B	IHM	P-3	3'-0"	7'-0"	1 3/4"	HM	P-1	F5	6/A9	6/A9	4/A8	2		
16	B	IHM	P-3	3'-0"	7'-0"	1 3/4"	HM	P-1	F5	6/A9	6/A9	4/A8	2		
17A	B	IHM	P-1/P-2	3'-0"	7'-0"	1 3/4"	HM	P-1	F5	1/A9 SIM	9/A9 SIM	3/A8	8		1
17B	E	STL	P-1/P-2	8'-0"	7'-4"	1/2"	STL	P-1	MFR	1/A6	2/A6	–	---		1

GENERAL NOTES

1. ALL DIMENSIONS ARE TO FACE OF FINISH, UON
2. REFER TO SPEC. SECTION 00870 – DESIGN SELECTION SUMMARY FOR A LIST OF FINISH MATERIALS

KEYNOTES

1. PAINT FACE OF DOOR FACING EXTERIOR P-1 & FACE OF DOOR FACING THE INTERIOR OF THE BUILDING P-2
2. PAINT FACE OF DOOR FACING VENDING P-2 & FACE OF DOOR FACING RESTROOM P-3
3. PREFINISHED ALUMINUM DOOR COLOR TO MATCH P-1

FINISH KEY

IHM – INSULATED HOLLOW METAL
PAL – PREFINISHED ALUMINUM
F.F. – FACTORY FINISHED

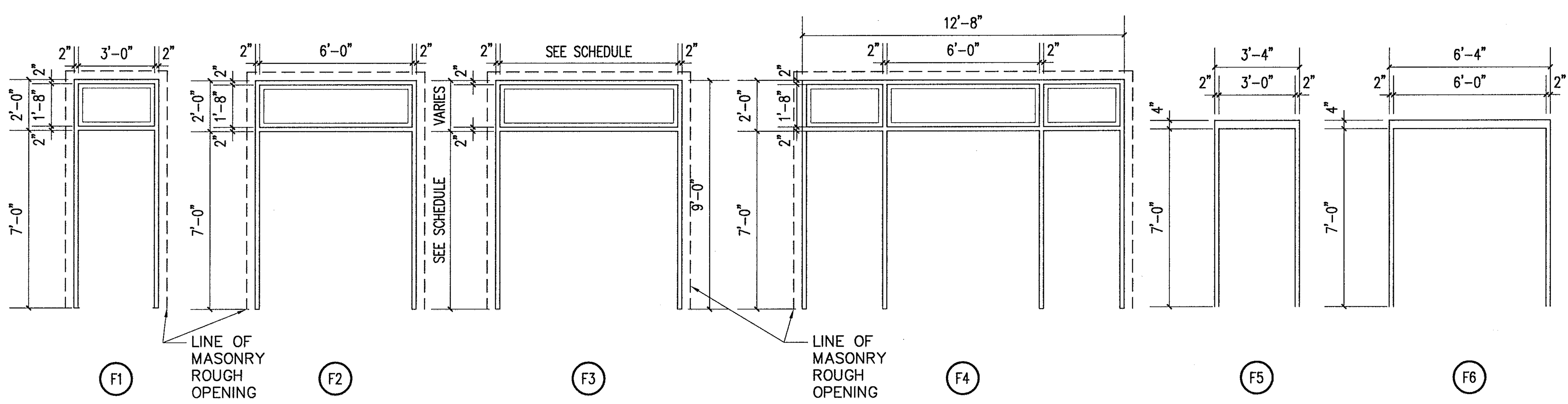

DOOR FRAMES

SCALE: 1/4"=1'-0"

TRANSOMS AT TYPES A, B & F SHALL BE GLAZED DIRECTLY INTO FRAMES PER DETAILS, FRAME STOPS SHOWN FOR CLARITY

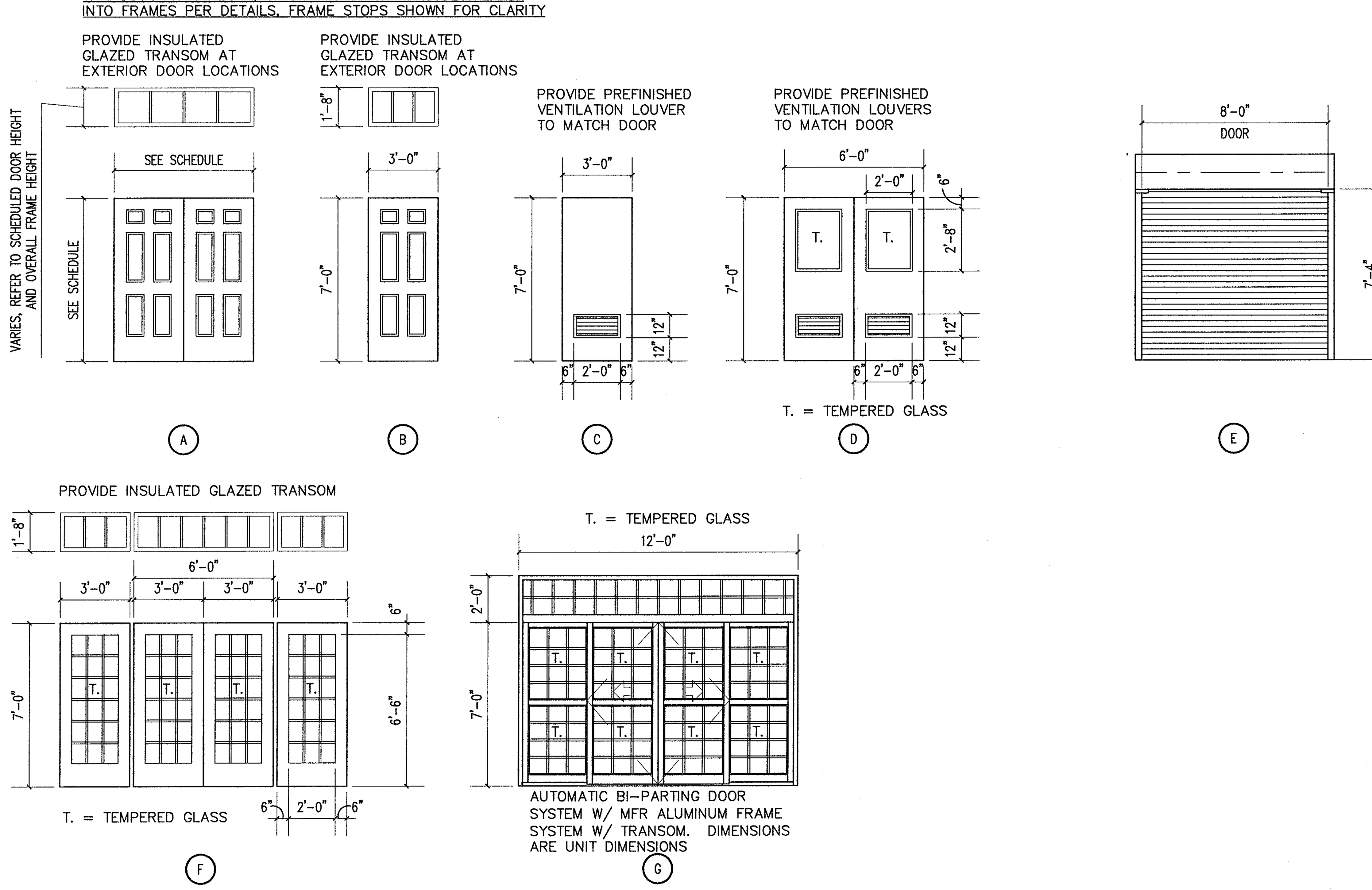

DOOR ELEVATIONS

SCALE: 1/4"=1'-0"

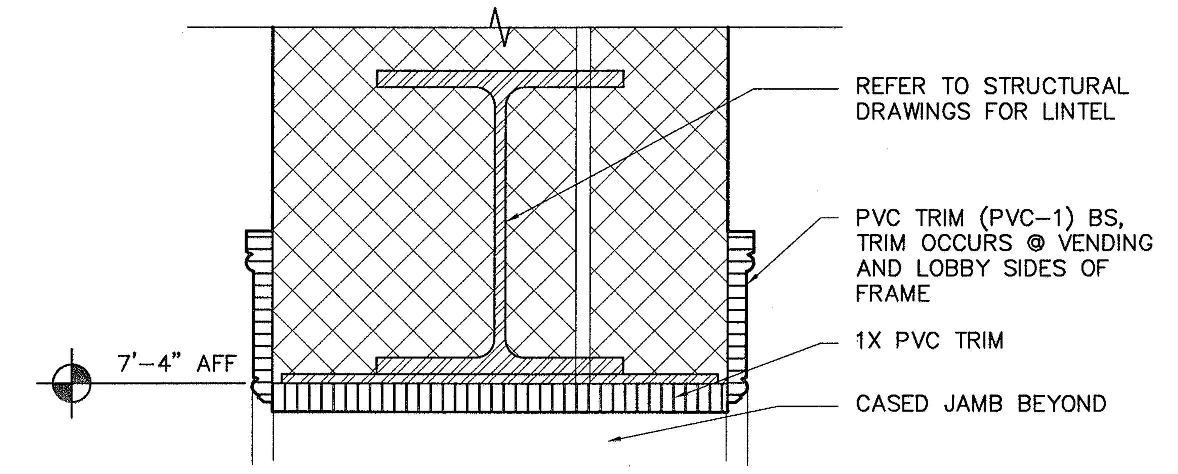

1 A8/A8 CASED OPENING (HEAD CONDITION)

SCALE: 3"=1'-0"

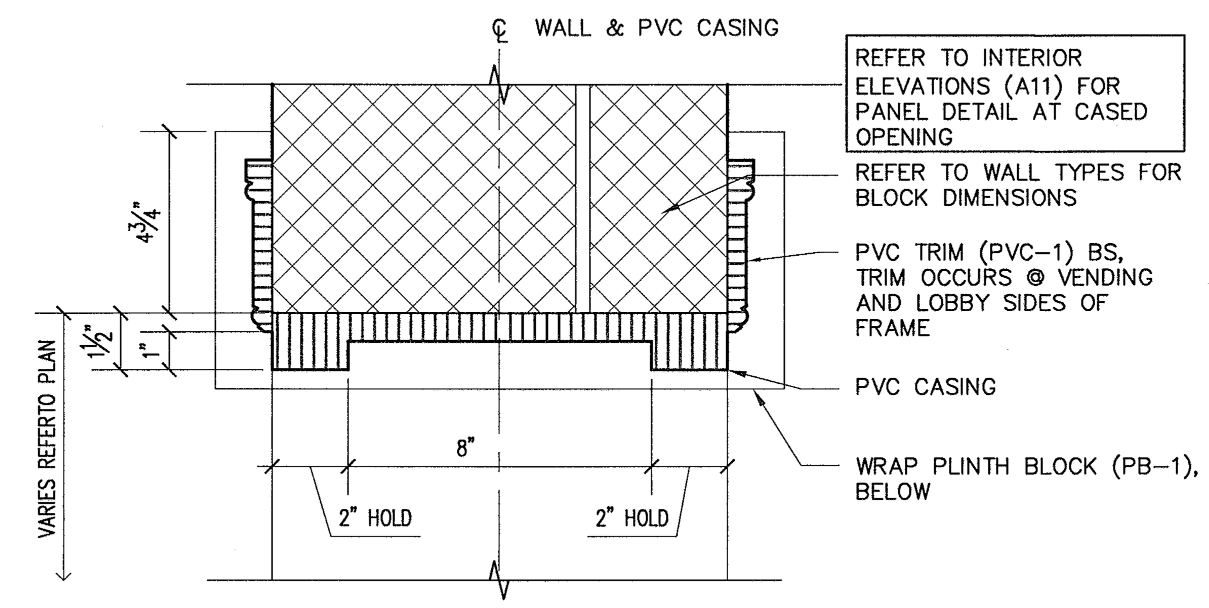

2 A8/A8 CASED OPENING (JAMB CONDITION)

SCALE: 3"=1'-0"

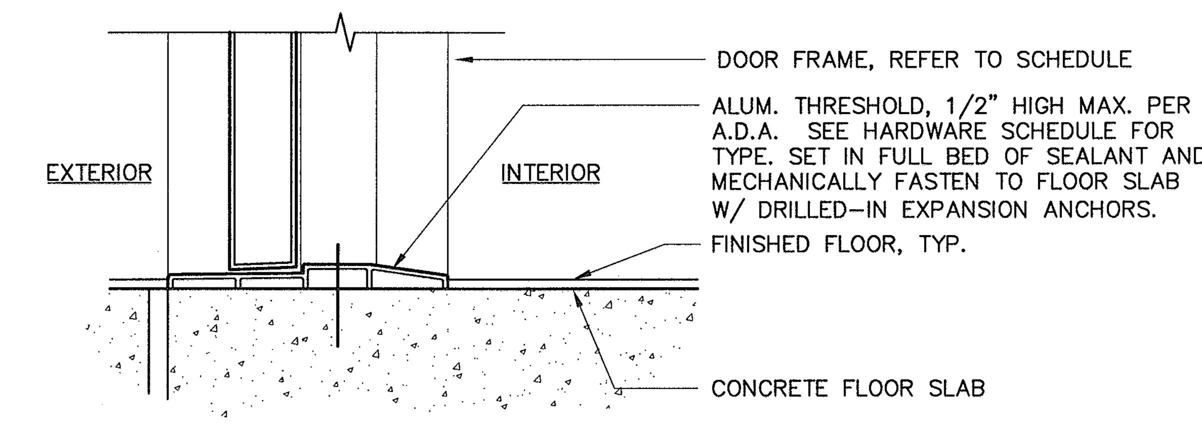

3 A8/A8 TYPICAL EXTERIOR THRESHOLD

SCALE: 3"=1'-0"

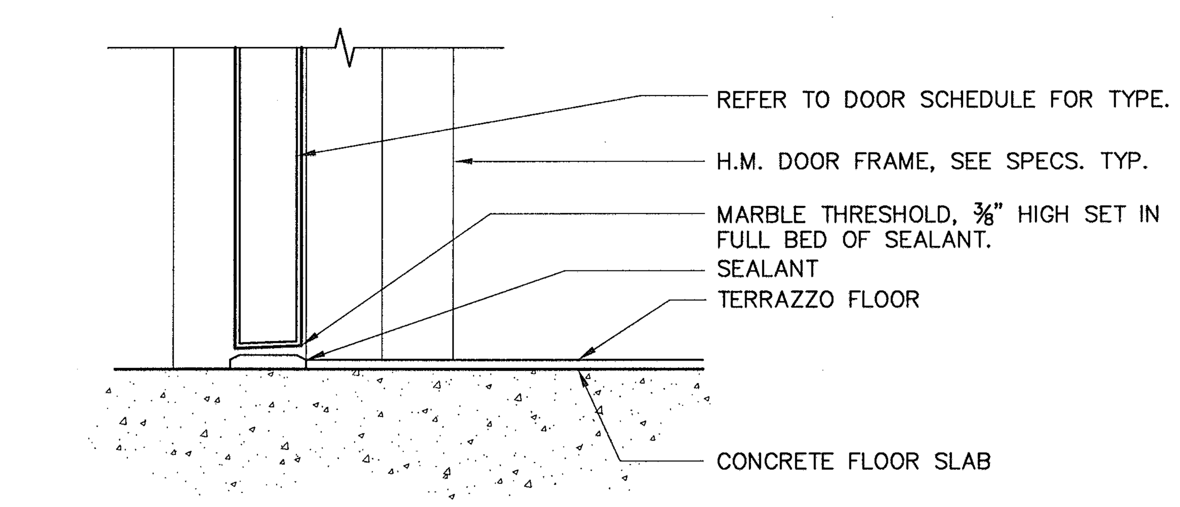

4 A8/A8 MARBLE THRESHOLD

SCALE: 3"=1'-0"

HARDWARE SCHEDULE

HARDWARE GROUP 1

QTY.	DESCRIPTION	ANSI/BHMA	FINISH
1	MANUFACTURER'S POWER OPERATING MECHANISM W/ INFARED SENSOR		
2	MANUFACTURER'S LOCK CYLINDER	–	630
2	COMPATIBLE LOCK CORE	–	630
2	DUST-PROOF STRIKE	L04011	630
1 SET	MANUFACTURER'S PILE WEATHERSTRIPPING	–	–
1	MANUFACTURER'S THRESHOLD, ADA TYPE	–	719

HARDWARE GROUP 2

QTY.	DESCRIPTION	ANSI/BHMA	FINISH
1 1/2 PR	BUTT HINGES	A5112	630
1	BORED LEVER LOCKSET F86 (STOREROOM)	–	630
1	OVERHEAD STOP / HOLD OPEN	C02511	630
1 SET	DOOR SILENCERS	L03011	GRAY

HARDWARE GROUP 3

QTY.	DESCRIPTION	ANSI/BHMA	FINISH
1 1/2 PR	BUTT HINGES	A5112	630
1	BORED LEVER LOCKSET F84 (CLASSROOM)	–	630
1	SURFACE CLOSER (PT 4G, PT 4H)	C02211	701
1 SET	DOOR SILENCERS	L03011	GRAY
1	WIDE ANGLE DOOR VIEWER	L03221	630

HARDWARE GROUP 4

QTY.	DESCRIPTION	ANSI/BHMA	FINISH
3 PR.	BUTT HINGES	A5112	630
1	BORED LEVER LOCKSET F84 (CLASSROOM)	–	630
1 PR.	LEVER EXTENSION FLUSH BOLTS	L04081	630
1	DUST-PROOF STRIKE	L04011	630
2	OVERHEAD STOP / HOLD OPEN	C02511	630
2	KICKPLATE	J102	630
1	WIDE ANGLE DOOR VIEWER	L03221	630
1	DOOR MANUFACTURER'S "Z" ASTRAGAL	–	PAINT
1 SET	WEATHERSTRIPPING (PEMKO 305CR)	–	628
1	THRESHOLD, ADA TYPE	J32180	719

HARDWARE GROUP 5

QTY.	DESCRIPTION	ANSI/BHMA	FINISH
1 1/2 PR	BUTT HINGES	A5112	630
1	BORED LEVER LOCKSET F84 (CLASSROOM)	–	630
1	SURFACE CLOSER (PT 4G, PT 4H)	C02211	701
1 SET	DOOR SILENCERS	L03011	GRAY

HARDWARE GROUP 6

QTY.	DESCRIPTION	ANSI/BHMA	FINISH
3 PR.	BUTT HINGES	A5112	630
2	PUSH BAR	J501	630
2	DOOR PULL	–	630
2	CONCEALED CLOSER (PT 4G, PT 4H)	C0531	–
1	THREE POINT LOCK	E0261	630
1	DUST-PROOF STRIKE	L04011	630
2	KICKPLATE	J102	630
1 SET	MANUFACTURER'S PILE WEATHERSTRIPPING	–	–
1	THRESHOLD, ADA TYPE	J32180	719

HARDWARE GROUP 7

QTY.	DESCRIPTION	ANSI/BHMA	FINISH
1 1/2 PR	BUTT HINGES	A5112	630
1	BORED LEVER LOCKSET F84 (CLASSROOM)	–	630
1	SURFACE CLOSER (PT 4G, PT 4H)	C02211	701
1	WIDE ANGLE DOOR VIEWER	L03221	630
1	KICKPLATE	J102	630
1 SET	DOOR SILENCERS	L03011	GRAY

HARDWARE GROUP 8

QTY.	DESCRIPTION	ANSI/BHMA	FINISH
1 1/2 PR	BUTT HINGES	A5112	630
1	BORED LEVER LOCKSET F84 (CLASSROOM)	–	630
2	SURFACE CLOSER (PT 4G, PT 4H)	C02211	701
1	WIDE ANGLE DOOR VIEWER	L03221	630
1	KICKPLATE	J102	630
1 SET	WEATHERSTRIPPING (PEMKO 305CR)	–	628

HARDWARE GROUP 9

QTY.	DESCRIPTION	ANSI/BHMA	FINISH
1 1/2 PR	BUTT HINGES	A5112	630
2	TOUCH BAR EXIT DEVICE: TYPE 1, FUNC. 08	–	630
2	SURFACE CLOSER (PT 4G, PT 4H)	C02241	701
1	WIDE ANGLE DOOR VIEWER	L03221	630
1	KICKPLATE	J102	630
1 SET	WEATHERSTRIPPING (PEMKO 305CR)	–	628
1	THRESHOLD, ADA TYPE	J32180	719

HARDWARE GROUP 10

QTY.	DESCRIPTION	ANSI/BHMA	FINISH
3 PR.	BUTT HINGES	A5112	630
1	ELECTRONIC PUSHBUTTON LOCK	–	630
1 PR.	LEVER EXTENSION FLUSH BOLTS	L04081	630
2	COMPATIBLE LOCK CORE	–	630
1	DUST-PROOF STRIKE	L04011	630
2	OVERHEAD STOP / HOLD OPEN	C02511	630
1	WIDE ANGLE DOOR VIEWER	L03221	630
1	DOOR MANUFACTURER'S "Z" ASTRAGAL	–	PAINT
1 SET	DOOR SILENCERS	L03011	GRAY

HARDWARE GROUP 11

QTY.	DESCRIPTION	ANSI/BHMA	FINISH
4 PR.	BUTT HINGES	A5112	630
1	BORED LEVER LOCKSET F84 (CLASSROOM)	–	630
1 PR.	LEVER EXTENSION FLUSH BOLTS	L04081	630
1	DUST-PROOF STRIKE	L04011	630
2	OVERHEAD STOP / HOLD OPEN	C02511	630
2	KICKPLATE	J102	630
1	DOOR MANUFACTURER'S "Z" ASTRAGAL	–	PAINT
1 SET	WEATHERSTRIPPING (PEMKO 305CR)	–	628
1	THRESHOLD, ADA TYPE	J32180	719
1	WIDE ANGLE DOOR VIEWER	L03221	630

ENGINEERS • ARCHITECTS • PLANNERS
DJG INC.
449 McLaws Circle, Williamsburg, VA 23185
Phone: 757.253.0673 Fax: 757.253.2319
Norfolk-Virginia Beach: 757.874.5015
www.djginc.com
COMMITTED TO EXCELLENCE

COMMONWEALTH OF VIRGINIA
MATTHEW GORHAM BURTON
No. 011104
8-3-06
ARCHITECT

THIS DOCUMENT CONTAINS INFORMATION PROPRIETARY TO DJG, INC. AND IS FURNISHED IN CONFIDENCE AN AN INSTRUMENT OF SERVICE FOR THE LIMITED PURPOSE OF EVALUATION, BIDDING AND REVIEW, OR CONSTRUCTION OF A SPECIFIC PROJECT. REPRODUCTION OF THIS DOCUMENT, IN WHOLE OR IN PART, OR THE MODIFICATION OF ANY DETAIL OR DESIGN WITHOUT THE EXPRESSED, WRITTEN CONSENT OF DJG, INC. IS PROHIBITED. ALL RIGHTS RESERVED. COPYRIGHT (C) 2006.

REVISIONS

NO.	DATE	DESCRIPTION

DOOR SCHEDULE AND DETAILS

VIRGINIA DEPARTMENT OF TRANSPORTATION
NEW KENT SAFETY REST AREA AND INFORMATION CENTER
NEW KENT COUNTY, VIRGINIA

SCALE AS NOTED | DESIGNED MGB | DRAWN LJD | CHECKED MGB | DATE 8/3/06

COMMISSION NUMBER
2070030

SHEET NUMBER
A8

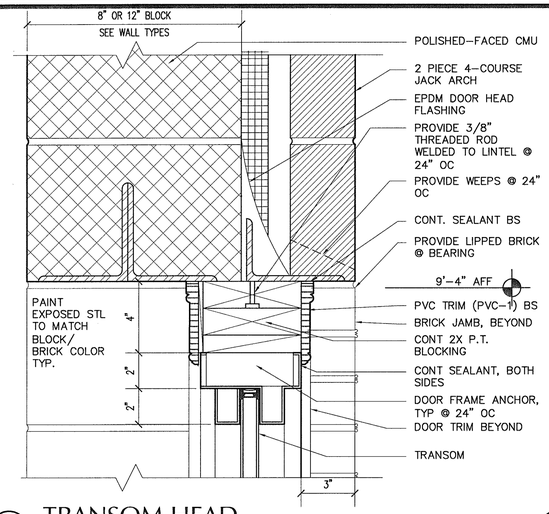

1 A9/A9 **TRANSOM HEAD**
SCALE: 3"=1'-0"

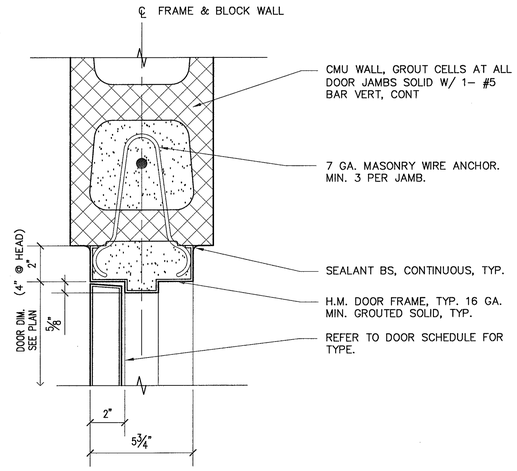

2 A9/A9 **DOOR JAMB (HEAD SIM.) AT CMU**
SCALE: 3"=1'-0"

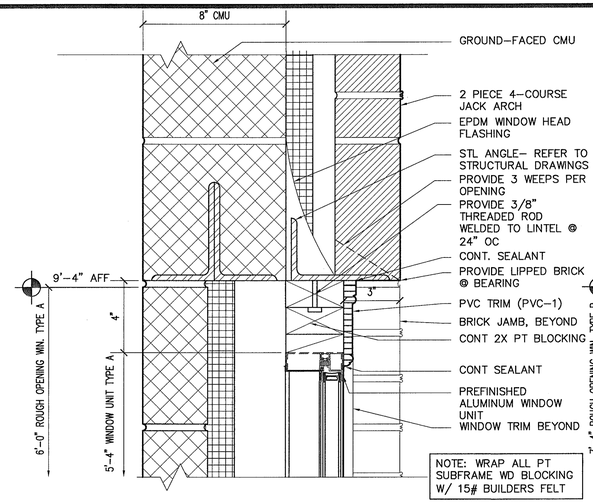

3 A9/A9 **WINDOW HEAD (FALSE WINDOW)**
SCALE: 3"=1'-0"

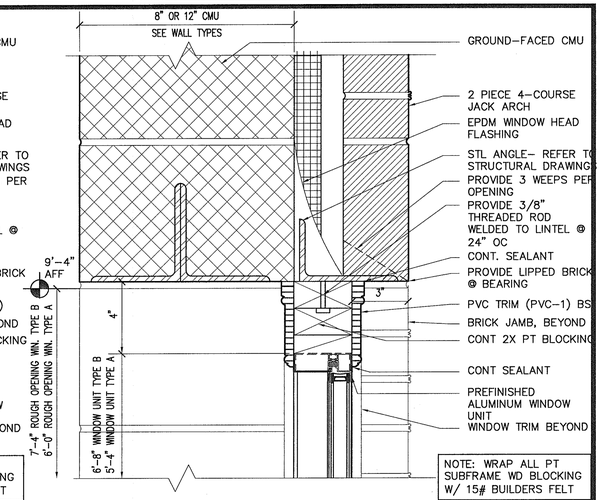

4 A9/A9 **WINDOW HEAD BRICK/BLOCK**
SCALE: 3"=1'-0"

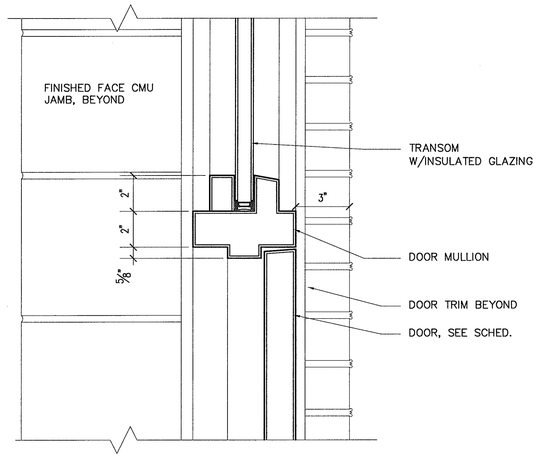

5 A9/A9 **DOOR HEAD TRANSOM MULLION**
SCALE: 3"=1'-0"

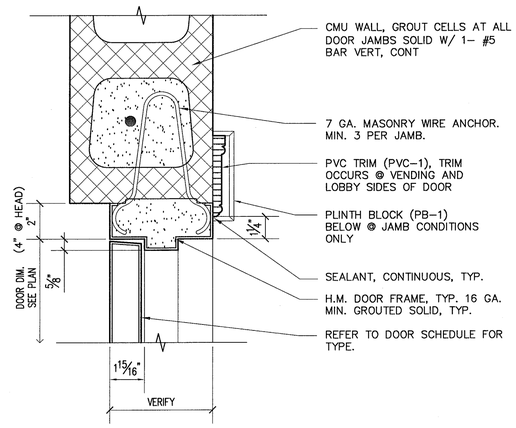

6 A9/A9 **DOOR JAMB (HEAD SIM.) W/CASING**
SCALE: 3"=1'-0"
d-door-int-casing

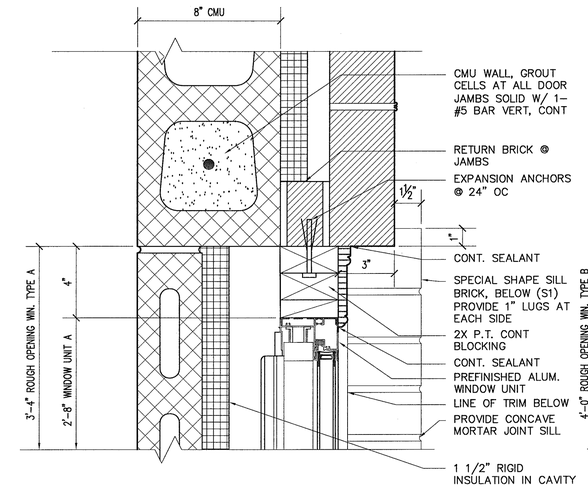

7 A9/A9 **WINDOW JAMB (FALSE WINDOW)**
SCALE: 3"=1'-0"

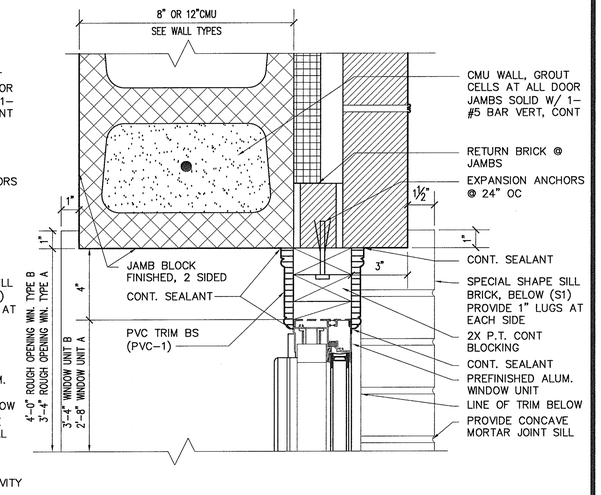

8 A9/A9 **WINDOW JAMB BRICK/BLOCK**
SCALE: 3"=1'-0"

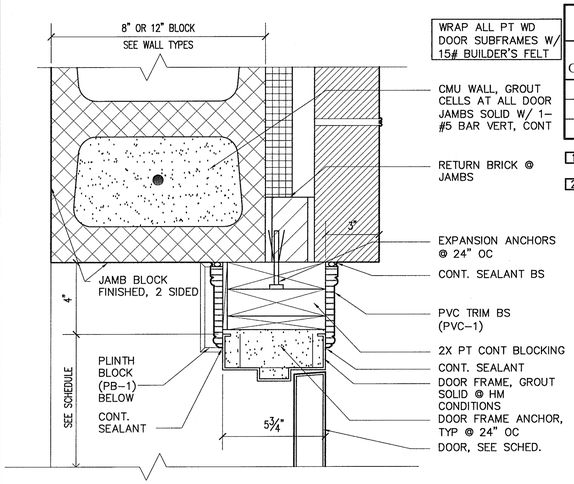

9 A9/A9 **DOOR JAMB BRICK/BLOCK**
SCALE: 3"=1'-0"

WRAP ALL PT WD DOOR SUBFRAMES W/ 15# BUILDER'S FELT

WINDOW SCHEDULE

QTY	TYPE	WINDOW UNIT HEIGHT	WINDOW UNIT WIDTH	WINDOW UNIT HEAD HEIGHT	DETAILS HEAD	DETAILS JAMB	DETAILS SILL	NOTES
19	A	5'-4"	2'-8"	9'-0"	3/A9	7/A9	10/A9	1
5	A	5'-4"	2'-8"	9'-0"	4/A9	8/A9	11/A9	2
4	B	6'-8"	3'-4"	9'-0"	4/A9	8/A9	11/A9	2

1 WINDOW IS TRIMMED OUT ON EXTERIOR SIDE ONLY, PROVIDE SPANDREL GLAZING
2 WINDOW IS TRIMMED OUT ON BOTH SIDES, PROVIDE INSULATED LOW E GLAZING

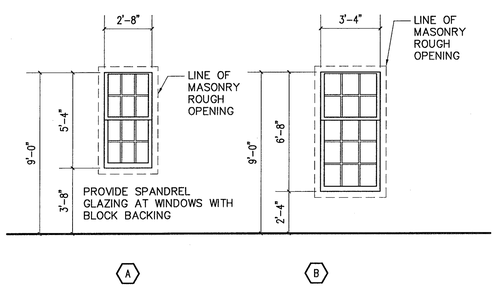

WINDOW TYPES
SCALE: 1/4"=1'-0"

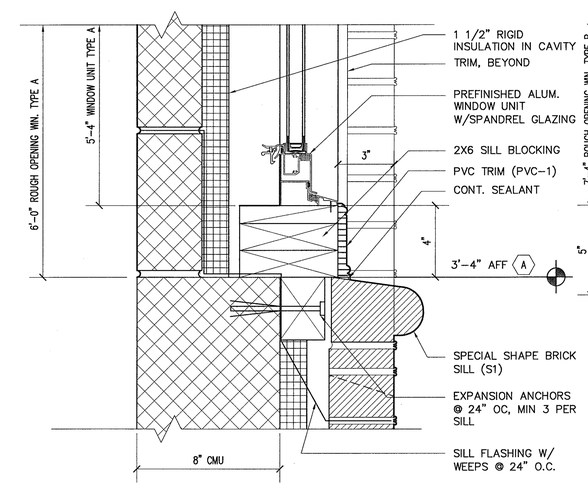

10 A9/A9 **WINDOW SILL (FALSE WINDOW)**
SCALE: 3"=1'-0"

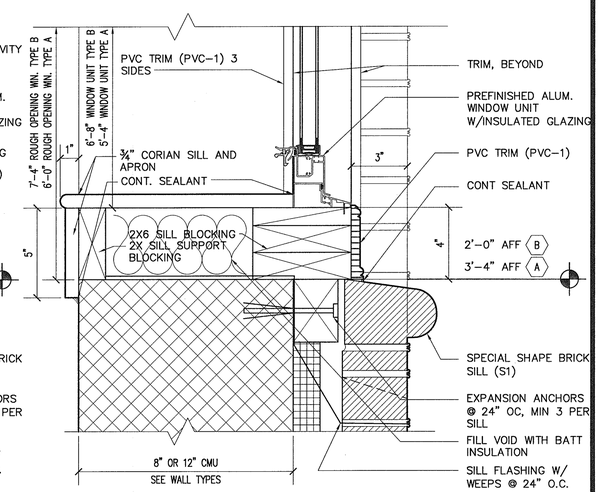

11 A9/A9 **WINDOW SILL BRICK/BLOCK**
SCALE: 3"=1'-0"

ENGINEERS • ARCHITECTS • PLANNERS
449 McLaws Circle, Williamsburg, VA 23185
Phone: 757.253.0673 Fax: 757.253.2319
Norfolk-Virginia Beach: 757.874.5015
www.dgjinc.com
DJ INC.
COMMITTED TO EXCELLENCE

COMMONWEALTH OF VIRGINIA
No. 011104
MATTHEW GUSTAVE BURTON
ARCHITECT

REVISIONS

DATE	DESCRIPTION

THIS DOCUMENT CONTAINS INFORMATION PROPRIETARY TO DJ, INC., AND IS FURNISHED IN CONFIDENCE AN INSTRUMENT OF SERVICE FOR THE LIMITED PURPOSE OF EVALUATION, BIDDING OR CONSTRUCTION. IT MAY NOT BE REPRODUCED, DISCLOSED, IN WHOLE OR IN PART OR THE MODIFICATION OF ANY PORTION OF THE DOCUMENT WITHOUT THE EXPRESSED, WRITTEN CONSENT OF DJ, INC. IS PROHIBITED. ALL RIGHTS RESERVED. COPYRIGHT (C) 2006.

DOOR AND WINDOW DETAILS

VIRGINIA DEPARTMENT OF TRANSPORTATION
NEW KENT SAFETY REST AREA AND INFORMATION CENTER
NEW KENT COUNTY, VIRGINIA

SCALE	DESIGNED	DRAWN	CHECKED	DATE
AS NOTED	MGB	LJD	MGB	8/3/06

COMMISSION NUMBER
2070030

SHEET NUMBER
A9

ROOM FINISH SCHEDULE

ROOM			FLOOR		BASE		WALLS												CEILING		
							WAINSCOT			NORTH		SOUTH		EAST		WEST					
NUMBER	NAME	NET AREA	MATL	FINISH	MAT'L	FINISH*	MAT'L	FINISH*	HEIGHT	MAT'L	FINISH*	MAT'L	FINISH*	MAT'L	FINISH*	MAT'L	FINISH*	MATL	HEIGHT	NOTES	
101	LOBBY	1008.00 SF	TZO	5	PVC 9	P-4	--	--	--	CMU-PF	POL-1	CMU-PF	POL-1	CMU-PF	POL-1	CMU-PF	POL-1	GYP	VARIES	--	
102	WOMEN	581.33 SF	EPX	EPX-1	CMU-PF	GC-1	CMU-PF	GC-1	3'-4"	CMU-PF	GC-2	CMU-PF	GC-2	CMU-PF	GC-2	CMU-PF	GC-2	GYP	8'-0"		6
103	WOMEN	597.78 SF	EPX	EPX-1	CMU-PF	GC-1	CMU-PF	GC-1	3'-4"	CMU-PF	GC-2	CMU-PF	GC-2	CMU-PF	GC-2	CMU-PF	GC-2	GYP	8'-0"		6
104	WOMEN	519.78 SF	EPX	EPX-1	CMU-PF	GC-1	CMU-PF	GC-1	3'-4"	CMU-PF	GC-2	CMU-PF	GC-2	CMU-PF	GC-2	CMU-PF	GC-2	GYP	8'-0"		6
105	MECHANICAL	617.33 SF	CONC	CS	RB	RB-1	--	--	--	CMU	P-2	CMU	P-2	CMU	P-2	CMU	P-2	GYP	13'-5"	--	
106	ELECTRICAL	117.33 SF	CONC	CS	RB	RB-1	--	--	--	CMU	P-2	CMU	P-2	CMU	P-2	CMU	P-2	GYP	13'-5"	--	
107	VENDING	1455.78 SF	TZO	5	PVC 9	P-4	--	--	--	CMU-PF	POL-1	CMU-PF	POL-1	CMU-PF	POL-1	CMU-PF	POL-1	GYP	VARIES	--	
108	VENDING STORAGE	224.00 SF	CONC	ST-1/CS	RB	RB-1	--	--	--	CMU	P-2	CMU	P-2	CMU	P-2	CMU	P-2	GYP	13'-5"	--	
109	POLICE	288.00 SF	CONC	ST-1/CS	RB	RB-1	--	--	--	CMU	P-2	CMU	P-2	CMU	P-2	CMU	P-2	GYP	9'-6"	--	
110	CORRIDOR	174.22 SF	CONC	ST-1/CS	RB	RB-1	--	--	--	CMU	P-2	CMU	P-2	CMU	P-2	CMU	P-2	GYP	9'-6"	--	
111	JANITORIAL	257.78 SF	CONC	CS	RB	RB-1	--	--	--	CMU	P-2	CMU	P-2	CMU	P-2	CMU	P-2	GYP	13'-5"	--	
112	COMPUTER	168.89 SF	CONC	ST-1/CS	RB	RB-1	--	--	--	CMU	P-2	CMU	P-2	CMU	P-2	CMU	P-2	ACT	8'-0"	--	
113	MECHANICAL 2	320.00 SF	CONC	CS	RB	RB-1	--	--	--	CMU	P-2	CMU	P-2	CMU	P-2	CMU	P-2	GYP	13'-5"	--	
114	FAMILY TOILET	106.67 SF	EPX	EPX-1	CMU-PF	GC-1	CMU-PF	GC-1	3'-4"	CMU-PF	GC-2	CMU-PF	GC-2	CMU-PF	GC-2	CMU-PF	GC-2	GYP	8'-0"		6
115	MEN	522.67 SF	EPX	EPX-1	CMU-PF	GC-1	CMU-PF	GC-1	3'-4"	CMU-PF	GC-2	CMU-PF	GC-2	CMU-PF	GC-2	CMU-PF	GC-2	GYP	8'-0"		6
116	MEN	518.67 SF	EPX	EPX-1	CMU-PF	GC-1	CMU-PF	GC-1	3'-4"	CMU-PF	GC-2	CMU-PF	GC-2	CMU-PF	GC-2	CMU-PF	GC-2	GYP	8'-0"		6
117	MAINTENANCE	234.67 SF	CONC	CS	--	--	--	--	--	CMU	--	CMU	--	CMU	--	CMU	--	GYP	11'-5 3/8"	--	

*FINISHES NOTED (P-4, ETC) ARE FINISH COLORS SPECIFIED IN SPECIFICATION SECTION 00870 "DESIGN SELECTION SUMMARY." SEE SPEC. SECTION 09900 FOR REQUIRED PAINT SYSTEM

FINISH KEY

ACT	–	ACUSTICAL CEILING TILE
CONC	–	SEALED CONCRETE
CMU-PF	–	PREFINISHED CMU
CS	–	CONCRETE SEALER
EPX	–	EPOXY FLOORING
GC	–	GLAZED COATING
P	–	PAINT
POL	–	POLISH FINISH
RB	–	RUBBER BASE
ST	–	SEALED CONCRETE STAIN
TZO	–	TERRAZZO

LEGEND

TZO-1 ACCENT COLOR

TZO-2 FIELD COLOR

TZO-3 BORDER COLOR

GENERAL NOTES

1. ALL DIMENSIONS ARE TO FACE OF FINISH, UON
2. REFER TO SPEC. SECTION 00870 – DESIGN SELECTION SUMMARY FOR A LIST OF FINISH MATERIALS
3. REFER TO THE DOOR SCHEDULE ON SHEET A8 FOR ADDITIONAL DOOR AND FRAME FINISH INFORMATION
4. TRANSITION OF FLOOR FINISH MATERIALS AT DOOR THRESHOLDS SHOULD OCCUR AT MIDLINE OF DOOR PLANE
5. SEE PLAN ON THIS SHEET FOR ALL FLOOR PATTERNS
6. ALL WINDOW FRAMES TO BE PAINTED P-1
7. ALL CEILING SOFFIT TRIM TO BE PAINTED P-2
8. ALL GYP. BD. SOFFITS TO BE PAINTED P-1.
9. ALL EXPOSED GWB CEILINGS TO BE PAINTED WHITE (P-5).

KEYNOTES

1. BLOCK TO BE POL-1
2. GLAZED/POLISHED TRANSITION
3. BLOCK TO HAVE GLAZED BULLNOSE END CAPS ON WALL END, TYP. TO MATCH WALL COLOR, SCORE PATTERN
4. CAST ALUMINUM LETTERS BY TERAZZO MFR – FONT: PALATINO, SIZE: 8" TALL
5. SEE FINISH FLOOR PLAN BELOW FOR FINISH PATTERN OF FLOOR
6. BASE TO BE SELF COVED BASE INTREGAL TO BLOCK
7. BOLT TABLES TO FLOOR WHERE FLOOR PATTERN INTERSECTS
8. BOLT BENCH TO FLOOR
9. BASE TO BE MOULDING PROFILE PVC-3

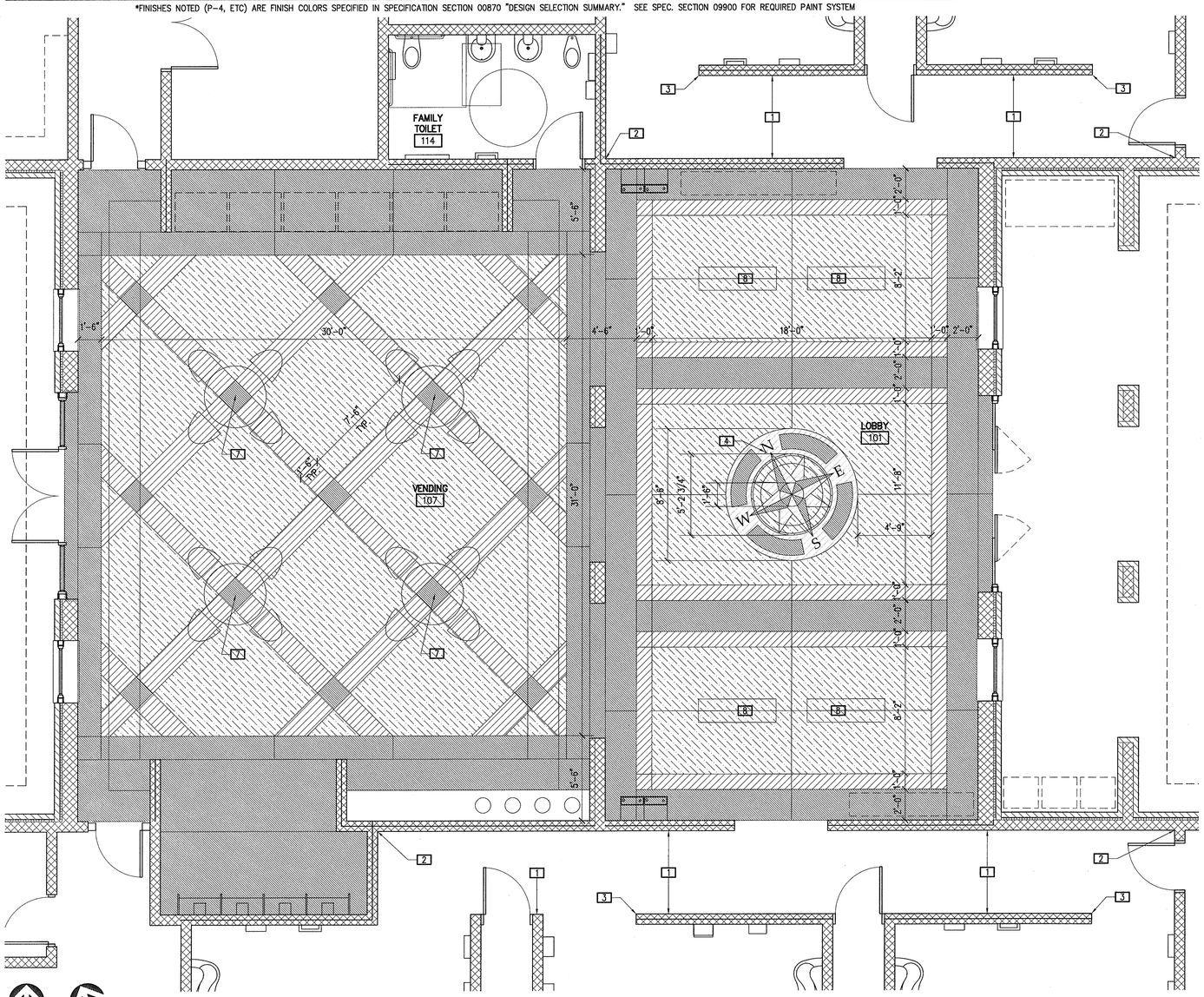

FINISH FLOOR PLAN

SCALE: 1/4" = 1'-0"

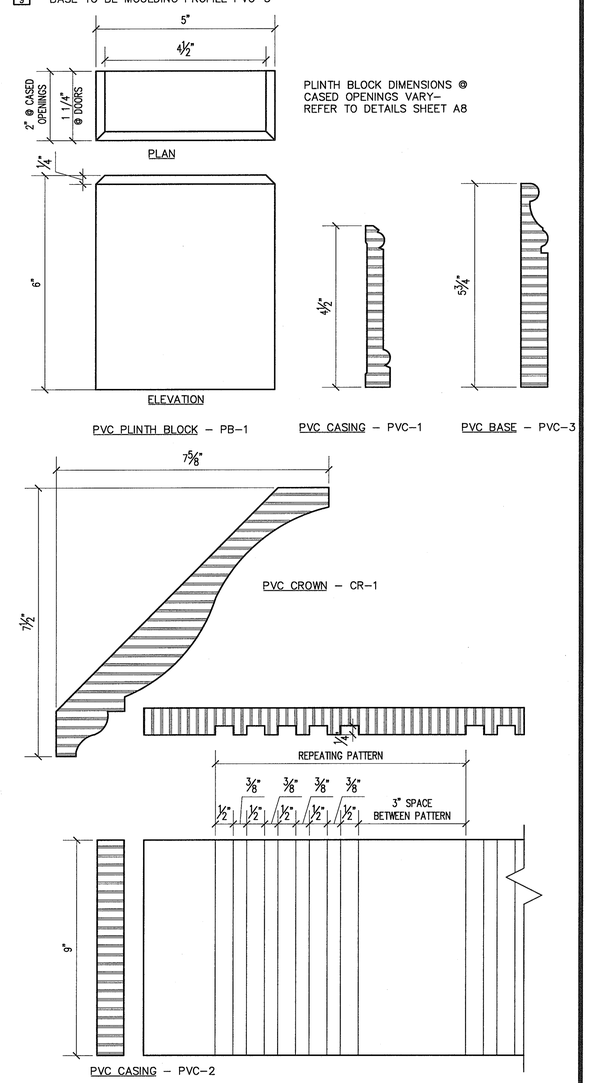

1 A2|A10 TYPICAL MOULDING PROFILES

SCALE: 6"=1'-0"

ENGINEERS • ARCHITECTS • PLANNERS

449 McLaws Circle, Williamsburg, VA 23185
Phone: 757.253.0673 Fax: 757.253.2319
Norfolk-Virginia Beach: 757.874.5015
www.dgiinc.com

DGI INC.

COMMITTED TO EXCELLENCE

COMMONWEALTH OF VIRGINIA MATTHEW GRAHAM BURTON No. 011104 8/2/06 ARCHITECT

THIS DOCUMENT CONTAINS INFORMATION PROPRIETARY TO DGI, INC. AND IS FURNISHED IN CONFIDENCE AN INSTRUMENT OF SERVICE FOR THE LIMITED PURPOSE OF EVALUATION, BIDDING OR CONSTRUCTION. NO PART OF THIS DOCUMENT MAY BE REPRODUCED IN WHOLE OR IN PART OR THE MODIFICATION OF ANY DETAIL OR DESIGN WITHOUT THE EXPRESSED, WRITTEN CONSENT OF DGI, INC. IS PROHIBITED. ALL RIGHTS RESERVED. COPYRIGHT (C) 2006.

REVISIONS

	DATE	DESCRIPTION

FINISH SCHEDULE AND DETAILS

VIRGINIA DEPARTMENT OF TRANSPORTATION
NEW KENT SAFETY REST AREA AND INFORMATION CENTER
NEW KENT COUNTY, VIRGINIA

SCALE	DESIGNED	DRAWN	CHECKED	DATE
AS NOTED	MGB	LJD	MGB	8/3/06

COMMISSION NUMBER **2070030**

SHEET NUMBER **A10**

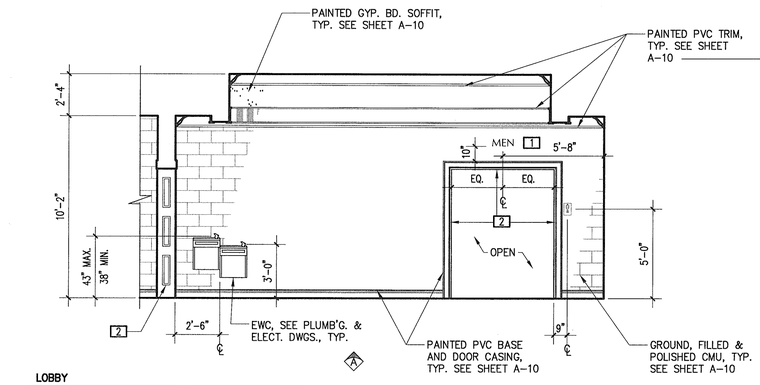

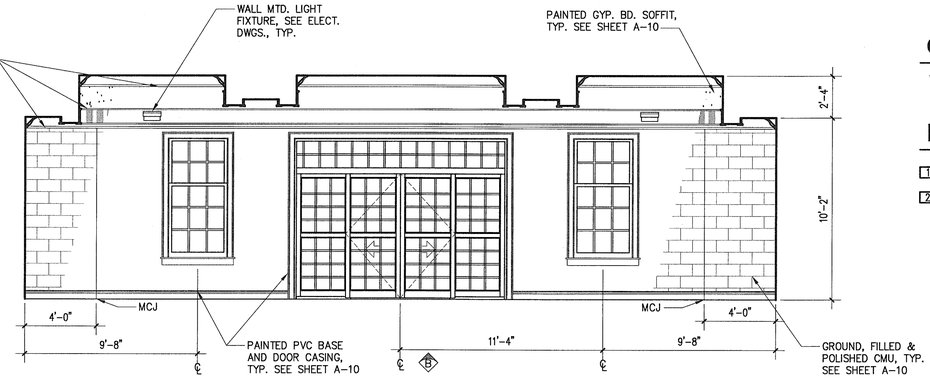

LOBBY
RM: 101

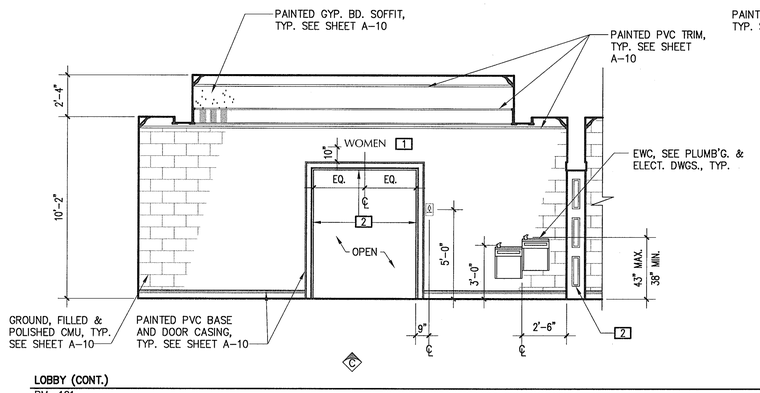

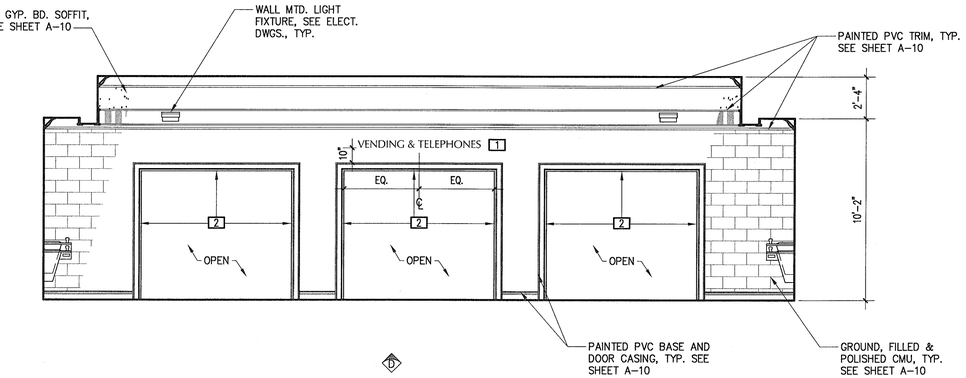

LOBBY (CONT.)
RM: 101

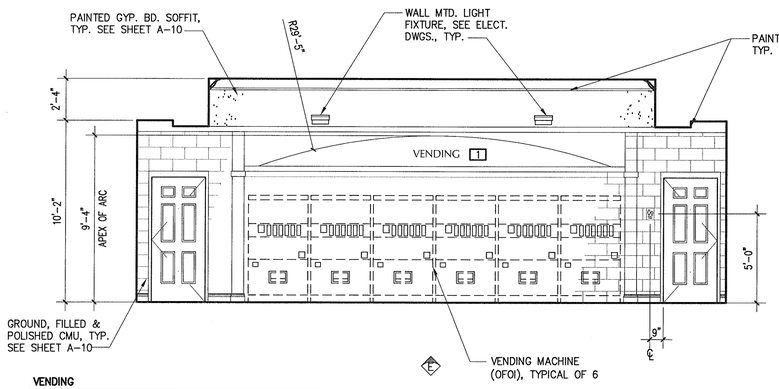

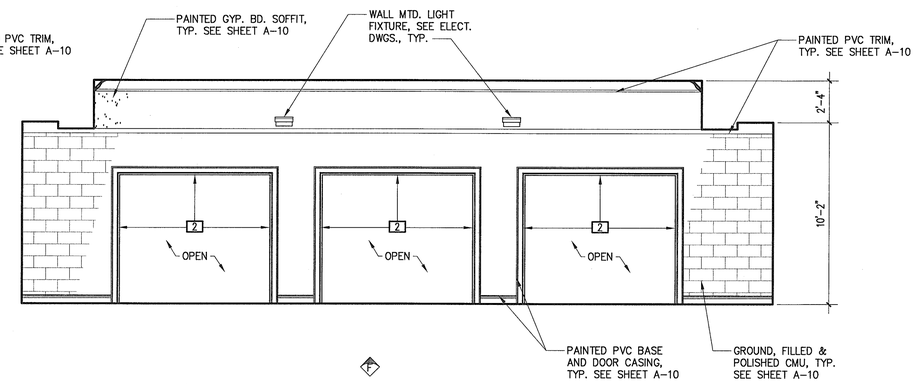

VENDING
RM: 107

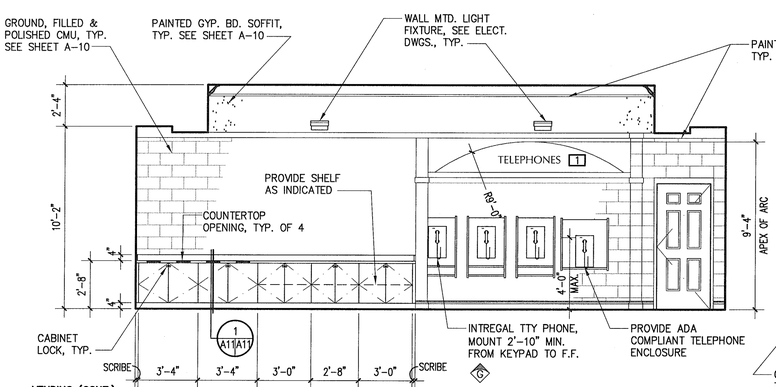

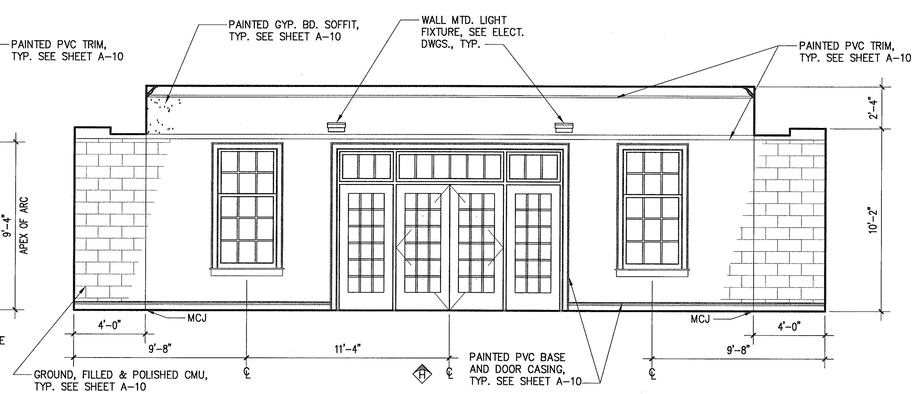

VENDING (CONT.)
RM: 107

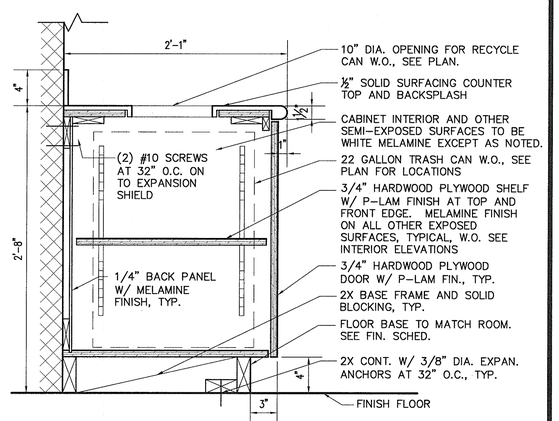

1 A11 A11 **BASE CABINET**
SCALE: 1 1/2"=1'-0"

GENERAL NOTES

1. ALL DIMENSIONS ARE TO FACE OF FINISH, UON

KEYNOTES

1 5" HIGH CAST ALUMINUM LETTERS – COLOR: P-4

2 CASED OPENING, REFER TO A8 FOR HEAD AND JAMB DETAILS

ENGINEERS • ARCHITECTS • PLANNERS
449 McLaws Circle, Williamsburg, VA 23185
Phone: 757.253.0673 Fax: 757.253.2319
Norfolk-Virgina Beach: 757.874.5015
www.dgiinc.com
DGI INC.
COMMITTED TO EXCELLENCE

COMMONWEALTH OF VIRGINIA
MATTHEW GORMAN BOUTON
No. 011104
ARCHITECT

REVISIONS

DATE	DESCRIPTION

THIS DOCUMENT CONTAINS INFORMATION PROPRIETARY TO D.G.I., INC. AND IS FURNISHED IN CONFIDENCE FOR THE LIMITED PURPOSE OF CONSTRUCTION, OPERATION, MAINTENANCE AND REVIEW. ANY OTHER USE, CONSTRUCTION OF A SPECIFIC PROJECT, REPRODUCTION OF THIS DOCUMENT, IN WHOLE OR IN PART, WITHOUT THE EXPRESS WRITTEN CONSENT OF D.G.I., INC. IS PROHIBITED. ALL RIGHTS RESERVED. COPYRIGHT © 2006.

INTERIOR ELEVATIONS

VIRGINIA DEPARTMENT OF TRANSPORTATION
NEW KENT SAFETY REST AREA AND INFORMATION CENTER
NEW KENT COUNTY, VIRGINIA

SCALE	DESIGNED	DRAWN	CHECKED	DATE
AS NOTED	MGB	LJD	MGB	8/3/06

COMMISSION NUMBER
2070030

SHEET NUMBER
A11

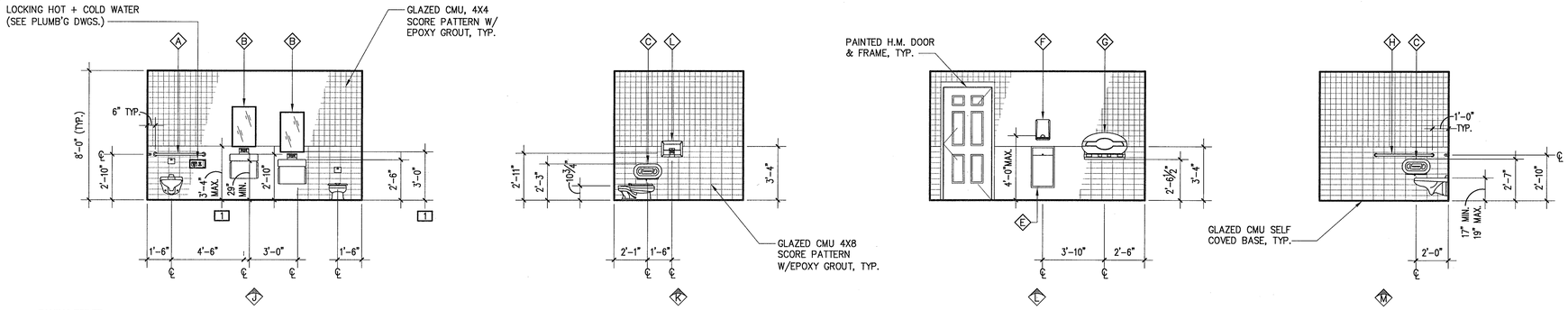

FAMILY TOILET
RM: 114

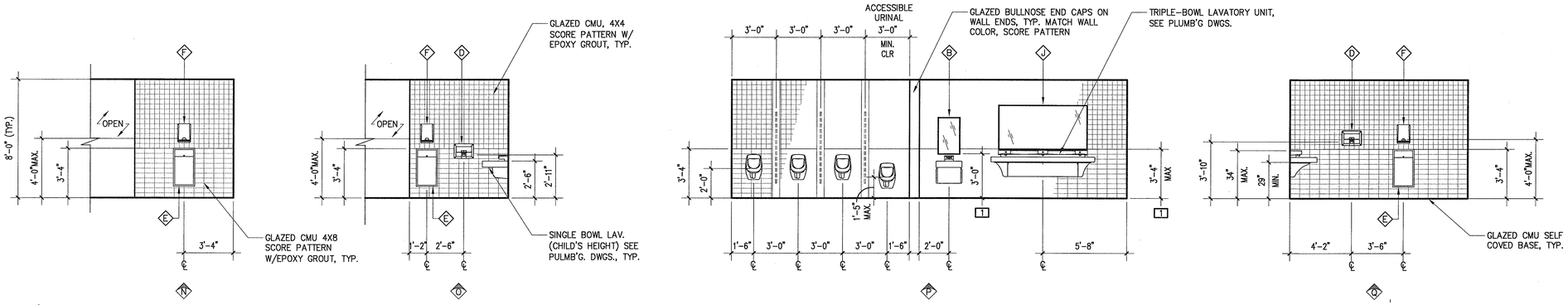

MEN'S RESTROOM
RM: 115 (116 OPP. SIM.)

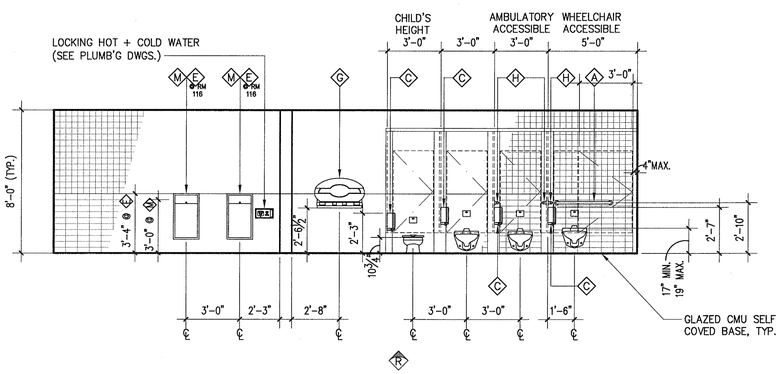

MEN'S RESTROOM (CONT.)
RM: 115 (116 OPP. SIM.)

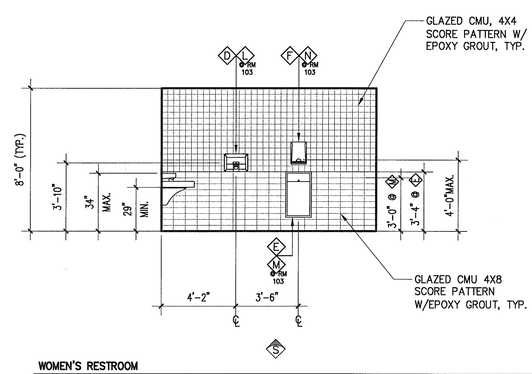

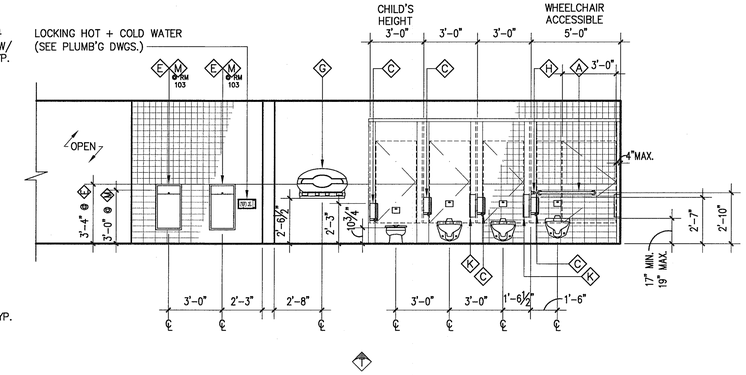

WOMEN'S RESTROOM
RM: 104 (102 SIM., 103 OPP. SIM.)

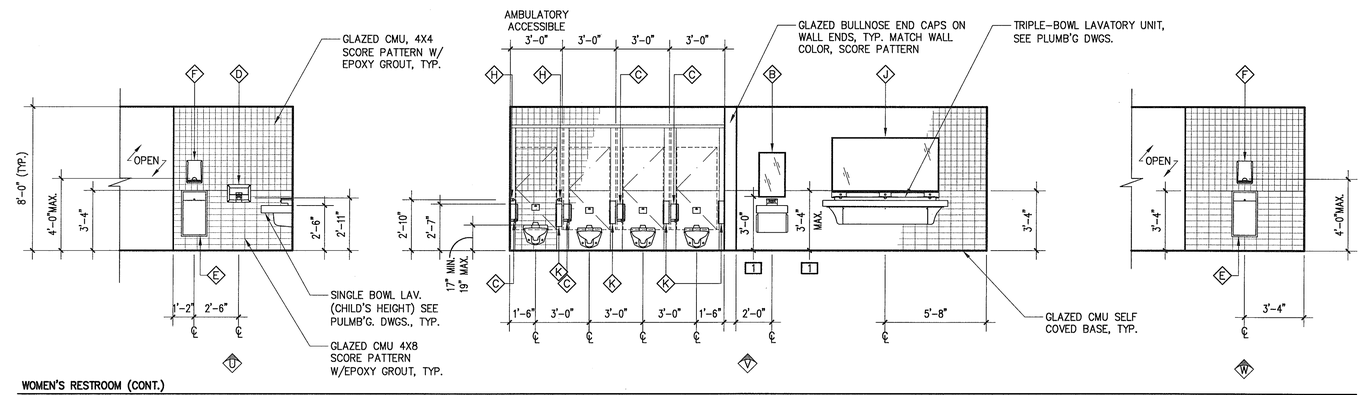

WOMEN'S RESTROOM (CONT.)
RM: 104 (102 SIM., 103 OPP. SIM.)

GENERAL NOTES

1. ALL DIMENSIONS ARE TO FACE OF FINISH, UON

KEYNOTES

1 DIMENSION IS FROM FACE OF REFLECTIVE SURFACE

TOILET ACCESSORY SCHEDULE

ITEM	DESCRIPTION
A	GRAB BAR – 36"
B	18" X 30" MIRROR (CENTERED ABOVE LAV.)
C	JUMBO-ROLL TOILET TISSUE DISPENSER
D	SEMI-RECESSED HAND DRYER
E	SEMI-RECESSED WASTE RECEPTACLE
F	SEMI-RECESSED AUTOMATED TOUCHLESS TOWEL DISPENSER
G	OVAL BABY CHANGING STATION
H	GRAB BAR – 42"
J	36" X 72" MIRROR (CENTERED ON LAV. UNIT)
K	SURFACE MOUNTED SANITARY NAPKIN DISPOSAL
L	SURFACE MOUNTED HAND DRYER
M	SURFACE MOUNTED WASTE RECEPTACLE
N	WALL MOUNT AUTOMATED TOUCHLESS TOWEL DISPENSER

ENGINEERS • ARCHITECTS • PLANNERS
449 McLaws Circle, Williamsburg, VA 23185
Phone: 757.253.0673 Fax: 757.253.2319
Norfolk-Virginia Beach: 757.874.5015
www.djginc.com
DJG INC.
COMMITTED TO EXCELLENCE

COMMONWEALTH OF VIRGINIA
MATTHEW BORIAN BOTTOM
No. 011104
ARCHITECT
8-3-06

REVISIONS

DATE	DESCRIPTION

THIS DOCUMENT CONTAINS INFORMATION PROPRIETARY TO D.J.G. INC. AND IS FURNISHED IN CONFIDENCE AS AN INSTRUMENT OF SERVICE FOR THE LIMITED PURPOSE OF EVALUATION, BIDDING OR CONSTRUCTION WITH RESPECT TO THE PROJECT OR SUBJECT SHOWN. IT SHALL NOT BE REPRODUCED IN WHOLE OR IN PART, OR THE MODIFICATION OF ANY DETAIL OR DESIGN WITHOUT THE EXPRESSED WRITTEN CONSENT OF D.J.G. INC. IT IS PROHIBITED. ALL RIGHTS RESERVED. COPYRIGHT (C) 2006.

INTERIOR ELEVATIONS

VIRGINIA DEPARTMENT OF TRANSPORTATION
NEW KENT SAFETY REST AREA AND INFORMATION CENTER
NEW KENT COUNTY, VIRGINIA

SCALE: AS NOTED
DESIGNED: MGB
DRAWN: LJD
CHECKED: MGB
DATE: 8/3/06

COMMISSION NUMBER
2070030

SHEET NUMBER
A12

FOB/AWT– FACE OF BRICK ABOVE WATER TABLE

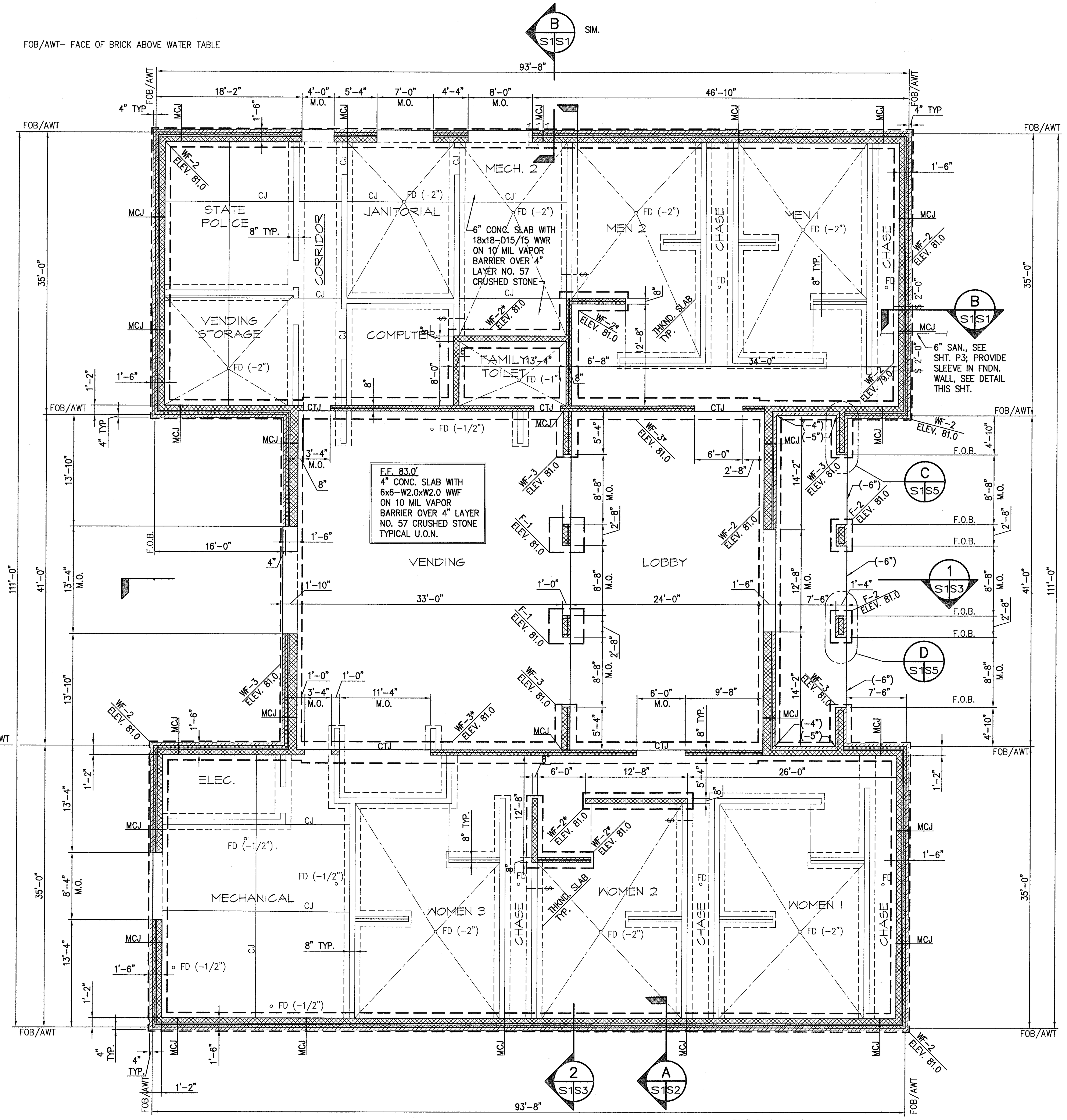

FOUNDATION PLAN

SCALE: 1/8"=1'–0"

PROJECT NORTH

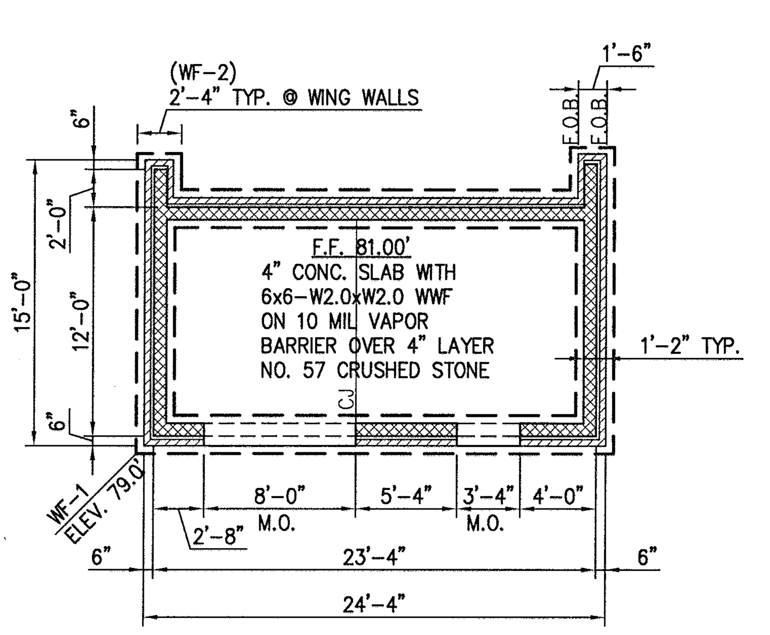

FOUNDATION PLAN - MAINT. BLDG.

SCALE: 1/8'=1'–0"

PROJECT NORTH

FOUNDATION NOTES:

1. PROVIDE THICKENED SLAB UNDER ALL NON–LOAD BEARING CMU WALLS AND WHERE INDICATED; SEE DETAIL F, THIS SHT.
2. SEE ARCH. DWGS. FOR DIMENSIONS NOT SHOWN ON THIS PLAN.
3. DIMENSIONS ON PLAN ARE TO FACE OF BLOCK UNLESS OTHERWISE NOTED.
4. SEE DETAIL H, SHT. S5 FOR SLAB JOINT DETAILS.
5. WALL THICKNESSES INDICATED ON THIS PLAN ARE AT FINISHED FLOOR LEVEL; SEE SECTION A, SHT. S2 AND ARCHITECTURAL DWGS. FOR ADDITIONAL DETAILS.

FOOTING SCHEDULE

MARK	SIZE	REINFORCING			REMARKS
		LONGITUDINAL BARS	TRANSVERSE BARS	DOWELS	
WF–1	2'–0"x12"xCONT.	(2) #5 CONT., BOT.	#4 @ 24" O.C., BOT.	#5 @ 48" O.C.	SEE NOTES 1 & 2
WF–2	2'–4"x12"xCONT.	(3) #5 CONT., BOT.	#4 @ 24" O.C., BOT.	#5 @ 48" O.C.	SEE NOTES 1, 2 & 3
WF–3	2'–8"x12"xCONT.	(3) #5 CONT., BOT.	#4 @ 24" O.C., BOT.	#5 @ 48" O.C.	SEE NOTES 1, 2 & 3
F–1	4'–4"x4'–4"x1'–0"	(4) #6, BOT.	(4) #6, BOT.	(4) #5	
F–2	4'–0"x2'–8"x1'–0"	(3) #5, BOT.	(4) #5, BOT.	––	

NOTES:
1. PROVIDE TOP BARS MATCHING BOTTOM BARS AT DOOR OPENINGS; EXTEND TOP BARS 40 BAR ø BEYOND OPENING JAMBS.
2. PROVIDE (1) DOWEL 8" FROM WALL ENDS AND MASONRY OPNGS., @ CORNERS, AND 48" O.C. MAX.; EXTEND 30" ABV. FOOTING. LAP FOOTING DOWELS W/VERTICAL WALL REINFORCING.
3. PROVIDE TOP BARS MATCHING BOTTOM BARS FOR WALL FOOTINGS WITH "*" DESIGNATION ON PLAN.

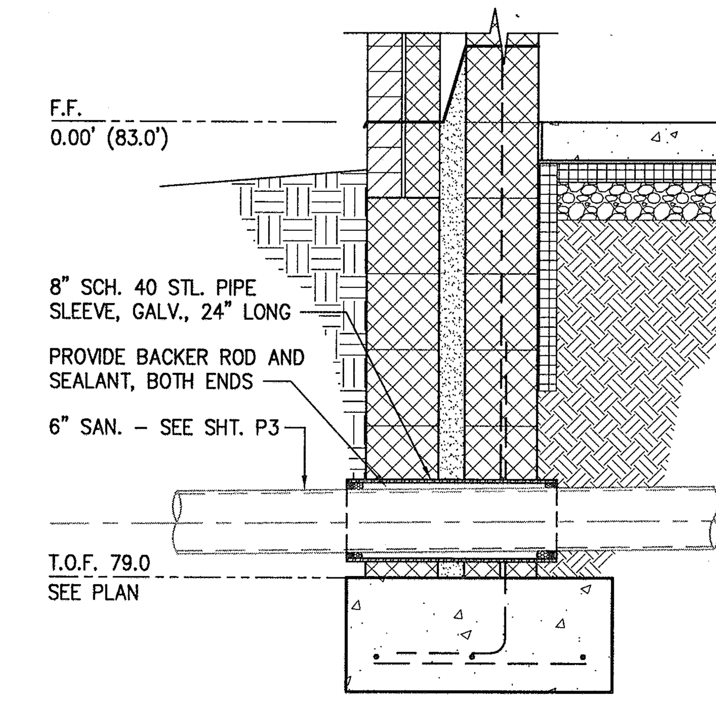

B S1|S1 SLEEVE FOR SAN. LINE THRU EXT. WALL

SCALE: 3/4"=1'–0"

NOTE: PROVIDE SIMILAR SLEEVES FOR WATER LINES PASSING THRU FOUNDATION WALL; SIZE STL. PIPE SLEEVES TO ACCOMMODATE WATER LINE SIZES

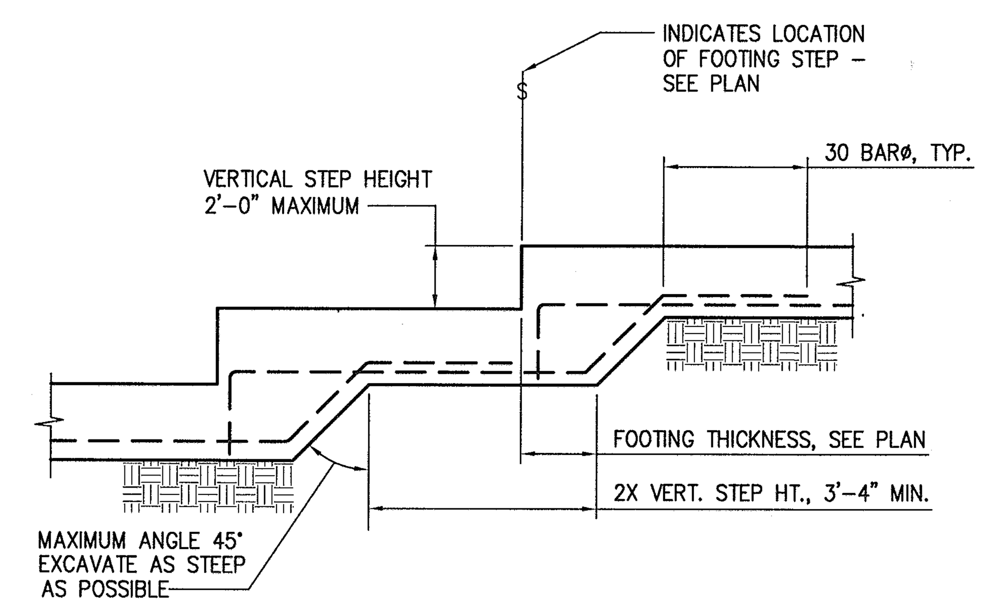

E S1|S1 TYPICAL STEPPED FOOTING

SCALE: 1/2"=1'–0"

(NOTED ON PLAN THUS: $)

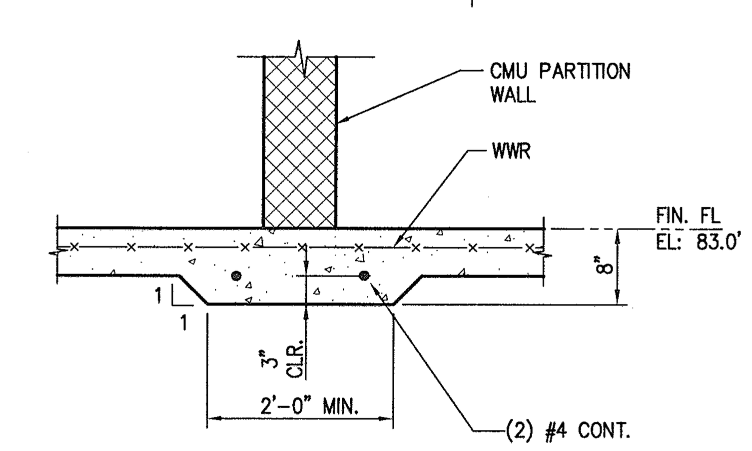

F S1|S1 DETAIL - THICKENED SLAB, TYP.

SCALE: 3/4"=1'–0"

NOTE:
AT PARTITION WALLS END, EXTEND THICKENED SLAB A MINIMUM OF 4" BEYOND WALL END

FOUNDATION PLAN LEGEND:

$	FOOTING STEP LOCATION – SEE DETAIL E, THIS SHT.
F3 ELEV. 81.0	FOOTING DESIGNATION – SEE SCHEDULE TOP OF FOOTING ELEV.
— – —	SLAB SLOPE TO DRAIN
∘ FD (–2")	FLOOR DRAIN, SEE SHT. P3; WHERE SLAB IS INDICATED TO BE SLOPED, SET TOP OF DRAIN (–0") BELOW F.F.
F.O.BLK.	FACE OF BLOCK (CMU)
F.O.B.	FACE OF BRICK
F.O.B./AWT	FACE OF BRICK ABOVE WATER TABLE
M.C.J.	MASONRY CONTROL JOINT – SEE DETAIL G, THIS SHT.
CJ	SLAB CONTROL JOINT – SEE DETAIL H, SHT. S5
CTJ	SLAB CONSTRUCTION JOINT – SEE DETAIL H, SHT. S5
	8" CMU PARTITION WALL – (2) 4" WYTHES
	8" CMU PARTITION WALL
1'–6"	8" CMU EXT. BEARING CAVITY WALL WITH BRICK VENEER WATERTABLE
	8" COMPOSITE BEARING WALL – (2) 4" WYTHES
	12" COMPOSITE BEARING WALL – (1) 8", (1) 4" WYTHE
1'–10"	12" CMU EXT. BEARING CAVITY WALL WITH BRICK VENEER WATERTABLE
1'–6"	18" COMPOSITE BEARING WALL – (1) 12" CMU, (1) 4" WYTHE

NOTES:

1. CODE:
THE APPLICABLE CODE FOR THIS PROJECT IS THE VUSBC 2003 EDITION.

2. DESIGN LOADS VUSBC CATEGORY II (TABLE 1604.5)

FLOOR LIVE LOAD: (1603.1.1)
ALL SLABS ON GRADE: 100 PSF

ROOF LIVE LOAD: (1603.1.2)
L_r 5:12 19 PSF
L_r 8:12 16 PSF

ROOF SNOW LOAD: (1603.1.3)
5:12 SLOPE 19 PSF
8:12 SLOPE 16 PSF

SNOW LOAD: (1603.1.3)
GROUND SNOW LOAD, Pg 20 PSF
FLAT ROOF SNOW LOAD, Pf 13 PSF
SNOW EXPOSURE FACTOR, Ce 0.9
SNOW LOAD IMPORTANCE FACTOR, I 1.0
THERMAL FACTOR, Ct 1.0

WIND {ASCE 7–02}: (1603.1.4)
BASIC WIND SPEED – 90 MPH
IMPORTANCE FACTOR – 1.0
EXPOSURE – B
INTERNAL PRESSURE COEF. ± 0.18
COMPONENTS & CLADDING ± 12.79 PSF

SEISMIC (1603.1.5):
SEISMIC DESIGN CATEGORY – B
SITE CLASS – D
SEISMIC USE GROUP – 1
S_{DS} – 0.203 %g S_{D1} – 0.112 %g
Cs – 0.259 R – 2.5
DESIGN BASE SHEAR – 0.081W
BASIC SEISMIC FORCE RESISTING SYSTEM – ORDINARY REINF. MASONRY SHEAR WALLS
ANALYSIS PROCEDURE – EQUIVALENT LATERAL FORCE PROCEDURE

3. FOUNDATIONS HAVE BEEN DESIGNED USING A MAX. ALLOWABLE BEARING PRESSURE OF 2,000 PSF IN ACCORDANCE WITH THE GEOTECHNICAL ENGINEERING REPORT PREPARED BY FROEHLING & ROBERTSON, INC. DATED JUNE 2006 AND INCLUDED IN THE PROJECT MANUAL (APPENDIX B).

ALL STRUCTURES SHALL BE CONSTRUCTED ON UNDISTURBED EARTH, OR SELECT MATERIAL INSTALLED IN 6–INCH MAXIMUM LIFTS, AND COMPACTED TO AT LEAST 95% MAXIMUM DRY DENSITY (ASTM D1557). PRIOR TO CONSTRUCTION OR INSTALLATION OF FILL, THE EXISTING SUBGRADE SHALL BE PROOF–ROLLED WITH A FULLY LOADED TANDEM DUMP TRUCK, IN THE PRESENCE OF AN INDEPENDENT GEOTECHNICAL ENGINEER; UNSUITABLE AREAS SHALL BE EXCAVATED AND STABILIZED IN ACCORDANCE WITH THE GEOTECHNICAL ENGINEER'S RECOMMENDATIONS.

4. CONCRETE
- FOOTINGS: 3,000 PSI AT 28 DAYS
- SLAB ON GRADE: 4,000 PSI AT 28 DAYS; ALL CONCRETE EXPOSED TO WEATHER SHALL BE AIR–ENTRAINED 5 TO 7 PERCENT.

REINFORCING BARS SHALL CONFORM TO ASTM A 615, GRADE 60; WELDED WIRE FABRIC SHALL CONFORM TO ASTM A185 AND BE PROVIDED IN FLAT MAT FORM IF AVAILABLE. REINFORCING DETAILS AND PLACEMENT SHALL CONFORM TO ACI 318. PROVIDE CONCRETE MIX DESIGNS FOR APPROVAL PRIOR TO CONSTRUCTION.

5. MASONRY:
f'm=1,500 PSI.; ASTM C90–02. PROVIDE REINFORCING BARS, ASTM A615, GRADE 60, IN GROUTED CELLS AT SPACING TO MATCH FOOTING DOWELS, SEE FOOTING SCHEDULE. PROVIDE HORIZONTAL JOINT JOINT REINFORCEMENT (GALVANIZED, ASTM A82) IN ALTERNATE COURSES OF ALL CMU. MORTAR SHALL BE TYPE M OR S. GROUT SHALL HAVE A MINIMUM COMPRESSIVE STRENGTH OF 2,000 PSI AND A SLUMP OF 8 TO 11 INCHES.

6. STEEL:
STEEL WIDE FLANGE SHAPES SHALL CONFORM TO ASTM A992, 50KSI; CHANNELS, ANGLES AND PLATES SHALL CONFORM TO ASTM A36, Fy=36 KSI; ALL STEEL SHALL BE FURNISHED WITH A SHOP–APPLIED RUST INHIBITIVE PRIMER; TOUCHUP WELDS AND ABRASIONS WITH MATCHING PRIMER AFTER CONSTRUCTION. ALL WELDING SHALL CONFORM TO AWS D1.1.; WELDING ELECTRODES SHALL BE E70 SERIES. GROUT FOR GROUTING BASE PLATES SHALL BE NON–SHRINK, NONFERROUS, HIGH–STRENGTH LOAD– BEARING PACKAGED PRODUCT CONFORMING TO ASTM C 1107; SONNEBORN "SONOGROUT 14", OR EQUAL.

7. WOOD:
WOOD FRAMING SHALL CONFORM TO THE REQUIREMENTS OF THE VIRGINIA STATEWIDE UNIFORM BUILDING CODE/2003 EDITION. DIMENSIONAL LUMBER SHALL CONFORM TO THE CURRENT STANDARD GRADING RULES FOR SOUTHERN PINE BY THE SOUTHERN PINE INSPECTION BUREAU (SPIB) MAX. MOISTURE CONTENT 19%.

GRADE STAMPS SHALL INDICATE GRADE, METHOD OF GRADING, SPECIES, MOISTURE CONTENT AND MILL IDENTIFICATION. FRAMING LUMBER SHALL BE S4S, SOUND AND FREE FROM WARP THAT CANNOT BE CORRECTED BY BRIDGING, BLOCKING OR NAILING.

FRAMING CONNECTORS: WOOD CONNECTORS SHALL BE AS MANUFACTURED BY SIMPSON OR EQUAL; PROVIDE APPROPRIATE GALVANIZED METAL FRAMING CONNECTORS AT ALL WOOD FRAMING CONNECTIONS FOR HANGERS, FRAMING ANGLES, SHEATHING CLIPS, ETC.

ROOF SHEATHING: 3/4" APA RATED PLYWOOD SHEATHING, SPAN RATING 48/24, EXPOSURE 1; ORIENTED STRAND BOARD (OSB) OR SIMILAR PANELS NOT ALLOWED. USE 4'x8' PANELS WITH LONG DIMENSION PERPENDICULAR TO FRAMING; STAGGER JOINTS, NO PANEL DIMENSION SMALLER THAN 2'–0". USE 8d COMMON NAILS AT 6" O.C. ALONG DIAPHRAGM BOUNDARIES, 6" O.C. ALL OTHER EDGES, AND 12" O.C. AT INTERMEDIATE SUPPORTS.

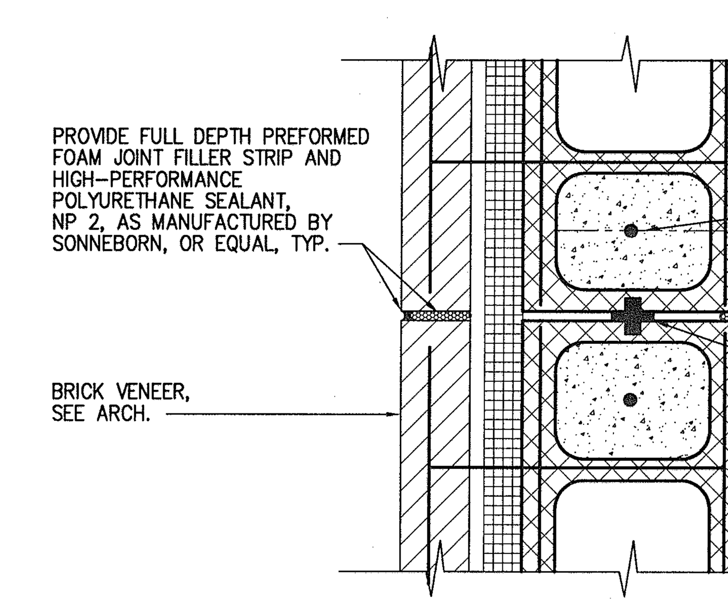

G S1|S1 DETAIL - MASONRY CONTROL JOINT (MCJ)

SCALE: 1 1/2"=1'–0"

GRAPHIC SCALE
0 4 8 12 16 20 24
SCALE: 1/8" = 1'–0"

ENGINEERS • ARCHITECTS • PLANNERS
DJG INC.
449 McLaws Circle, Williamsburg, VA 23185
Phone: 757.253.0673 Fax: 757.253.2319
Norfolk-Virginia Beach: 757.874.5015
www.djginc.com
COMMITTED TO EXCELLENCE

COMMONWEALTH OF VIRGINIA — DANIEL J. DE YOUNG — No.3517 — PROFESSIONAL ENGINEER — 8·13·06

THIS DOCUMENT CONTAINS INFORMATION PROPRIETARY TO DJG, INC. AND IS FURNISHED IN CONFIDENCE AN AN INSTRUMENT OF SERVICE FOR THE LIMITED PURPOSE OF EVALUATION, BIDDING AND REVIEW, OR CONSTRUCTION OF A SPECIFIC PROJECT. REPRODUCTION OF THIS DOCUMENT, IN WHOLE OR IN PART, OR THE MODIFICATION OF ANY DETAIL OR DESIGN WITHOUT THE EXPRESSED, WRITTEN CONSENT OF DJG, INC. IS PROHIBITED. ALL RIGHTS RESERVED. COPYRIGHT (C) 2006.

NO.	DATE	DESCRIPTION
REVISIONS		

FOUNDATION PLAN, NOTES & FOOTING SCHEDULE

VIRGINIA DEPARTMENT OF TRANSPORTATION
NEW KENT SAFETY REST AREA AND INFORMATION CENTER
NEW KENT COUNTY, VIRGINIA

SCALE	DESIGNED	DRAWN	CHECKED	DATE
AS NOTED	RNK	RNK	KMS	8/3/06

COMMISSION NUMBER
2070030

SHEET NUMBER
S1

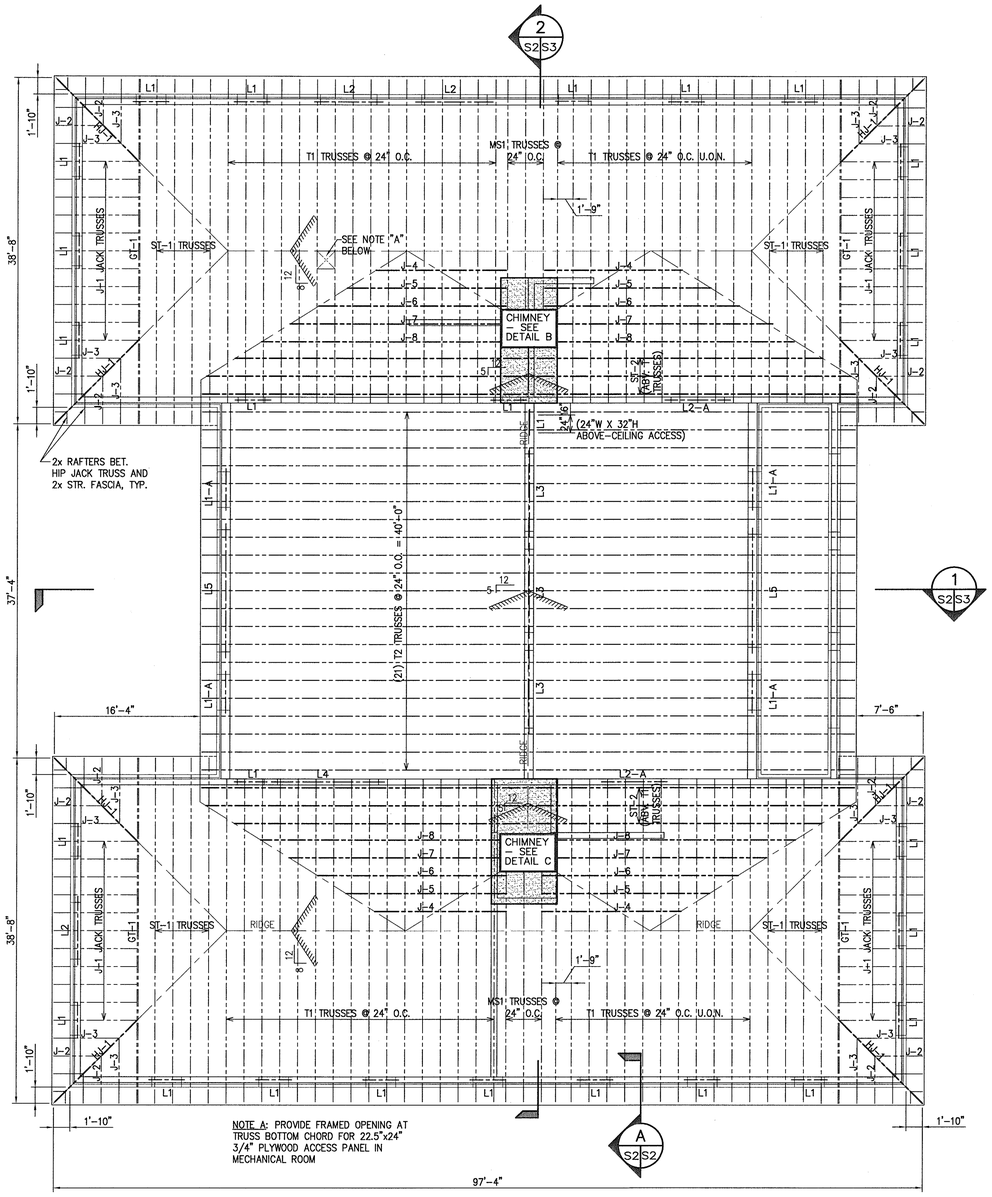

PROJECT NORTH

ROOF FRAMING PLAN

SCALE: 1/8"=1'-0"

SEE SHT. S4 FOR TRUSS DETAILS AND NOTES

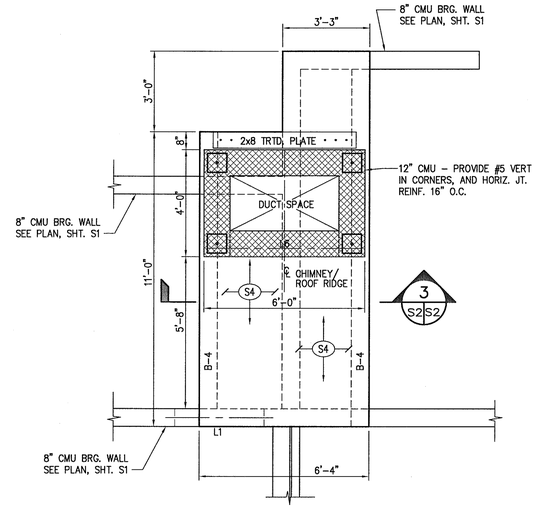

ENLARGED PLAN - NORTH CHIMNEY PLATFORM

B S2 S2 SCALE: 3/8"=1'-0"

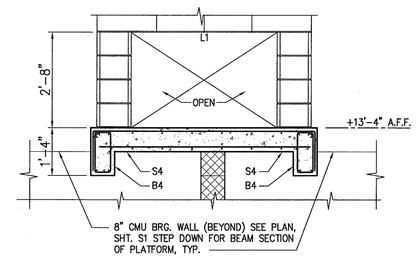

SECTION - NORTH CHIMNEY PLATFORM

3 S2 S2 SCALE: 1/2"=1'-0"

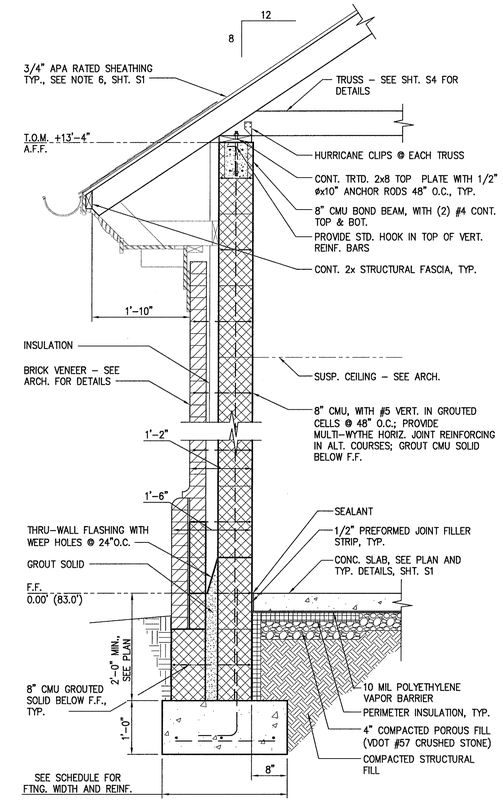

SECTION THRU BEARING WALL (WING, TYP.)

A S2 SCALE: 3/4"=1'-0"

S1,S2

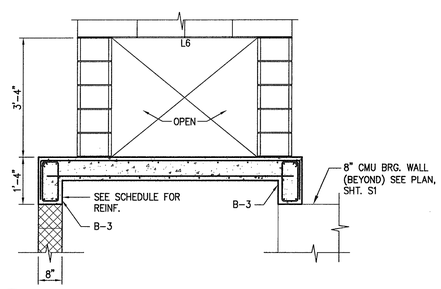

SECTION - SOUTH CHIMNEY PLATFORM

4 S2 S2 SCALE: 1/2"=1'-0"

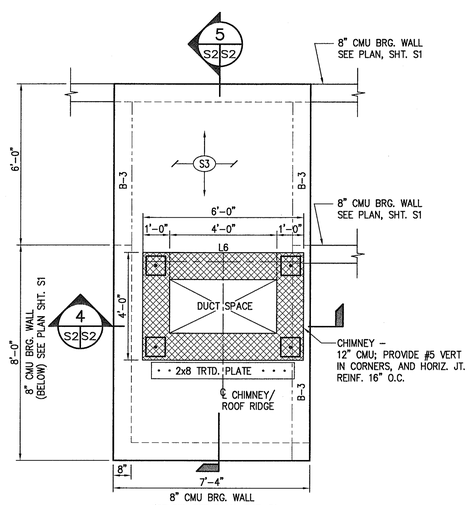

ENLARGED PLAN - SOUTH CHIMNEY PLATFORM

C S2 S2 SCALE: 3/8"=1'-0"

SEE SLAB & BEAM SCHEDULE, SHT. S6.

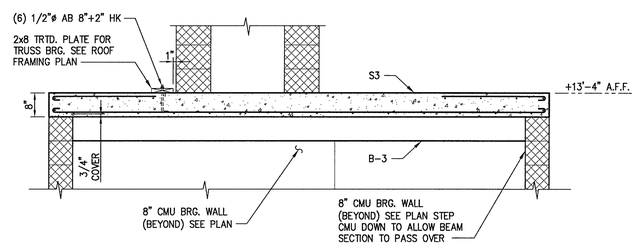

SECTION - SOUTH CHIMNEY PLATFORM

5 S2 S2 SCALE: 1/2"=1'-0"

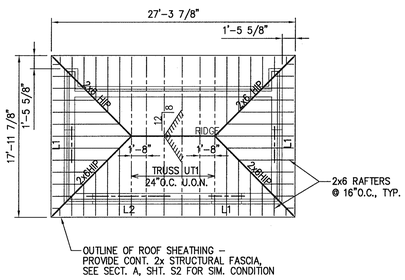

PROJECT NORTH

ROOF FRAMING PLAN - MAINT. BLDG.

SCALE: 1/8"=1'-0"

LINTEL SCHEDULE

DESIGNATION	LINTEL: CMU WALL	LINTEL: BRICK VENEER	LINTEL: BEARING E.E.	REMARKS
L1	DBL. L5x3 1/2x5/16 ⅃L LLV	L5x3 1/2x5/16 LLH	6"	SEE DETAIL E, SHT. S5; NOTE 4
L1-A	DBL. L5x5x5/16	L5x3 1/2x5/16 LLH	6"	SEE DETAIL E, SHT. S5
L2	DBL. L6x3-1/2x5/16 ⅃L LLV	L5x3 1/2x5/16 LLH	6"	SEE DETAIL E, SHT. S5
L2-A	DBL. L6x3-1/2x5/16 ⅃L LLV	--	6"	SIMILAR DETAIL E, SHT. S5
L3	W8x28 WITH 1/4"x11 1/2" CONT. BOTTOM PLATE ⊥	--	12"	SEE DETAIL A, SHT. S5
L4	W8x18; T.O.S. +12'-8" A.F.F. ⊥	--	12"	SEE DETAIL C, SHT. S5
L5	W12x40 WITH 1/4"x11 1/2" CONT. BOTTOM PLATE ⊥	L5x5x3/8	--	SEE DETAIL B, SHT. S5
NON-BRG. CMU PARTITION & L6	(1) L3 1/2x3 1/2x1/4 PER 4" WYTHE OR CMU	--	4"	SEE DETAIL D, SHT. S5

NOTES:
1. SEE GENERAL STRUCTURAL NOTES SHT. S1.1 FOR STEEL SPECIFICATIONS.
2. TACK WELD DBL. ANGLES TOGETHER.
3. LINTELS FOR BRICK VENEER SHALL BE HOT-DIPPED GALVANIZED, ASTM A123.
4. OMIT LOOSE LINTEL FOR NON-EXTERIOR WALL LOCATIONS.
5. PROVIDE SOLID MASONRY BEARING FOR ALL LINTELS, MIN. 3 COURSES HIGH.

ENGINEERS • ARCHITECTS • PLANNERS
449 McLaws Circle, Williamsburg, VA 23185
Phone: 757.253.0673 Fax: 757.253.2319
Norfolk-Virginia Beach: 757.874.5015
www.dgainc.com
COMMITTED TO EXCELLENCE

COMMONWEALTH OF VIRGINIA
DANIEL J. DE YOUNG
No. 3517
8-11-06
PROFESSIONAL ENGINEER

THIS DOCUMENT CONTAINS INFORMATION PROPRIETARY TO D.G.A., INC. AND IS FURNISHED IN CONFIDENCE AND SUBJECT TO RETURN UPON REQUEST. ACCEPTANCE AND REVIEW OF DOCUMENT CONSTITUTES AGREEMENT THAT IT WILL BE USED ONLY IN CONNECTION WITH THE DESIGN, ESTIMATING, BIDDING OR CONSTRUCTION OF A SPECIFIED PROJECT. REPRODUCTION OF THIS DOCUMENT, IN WHOLE OR IN PART, OR ITS DISCLOSURE TO OTHERS IS PROHIBITED WITHOUT WRITTEN CONSENT OF D.G.A., INC. ALL RIGHTS RESERVED. COPYRIGHT (C) 2006.

REVISIONS

DATE	DESCRIPTION

ROOF FRAMING PLAN, SECTIONS AND DETAILS

VIRGINIA DEPARTMENT OF TRANSPORTATION

NEW KENT SAFETY REST AREA AND INFORMATION CENTER

NEW KENT COUNTY, VIRGINIA

SCALE	AS NOTED
DESIGNED	RNK
DRAWN	RNK
CHECKED	KMS
DATE	8/3/06

COMMISSION NUMBER
2070030

SHEET NUMBER
S2

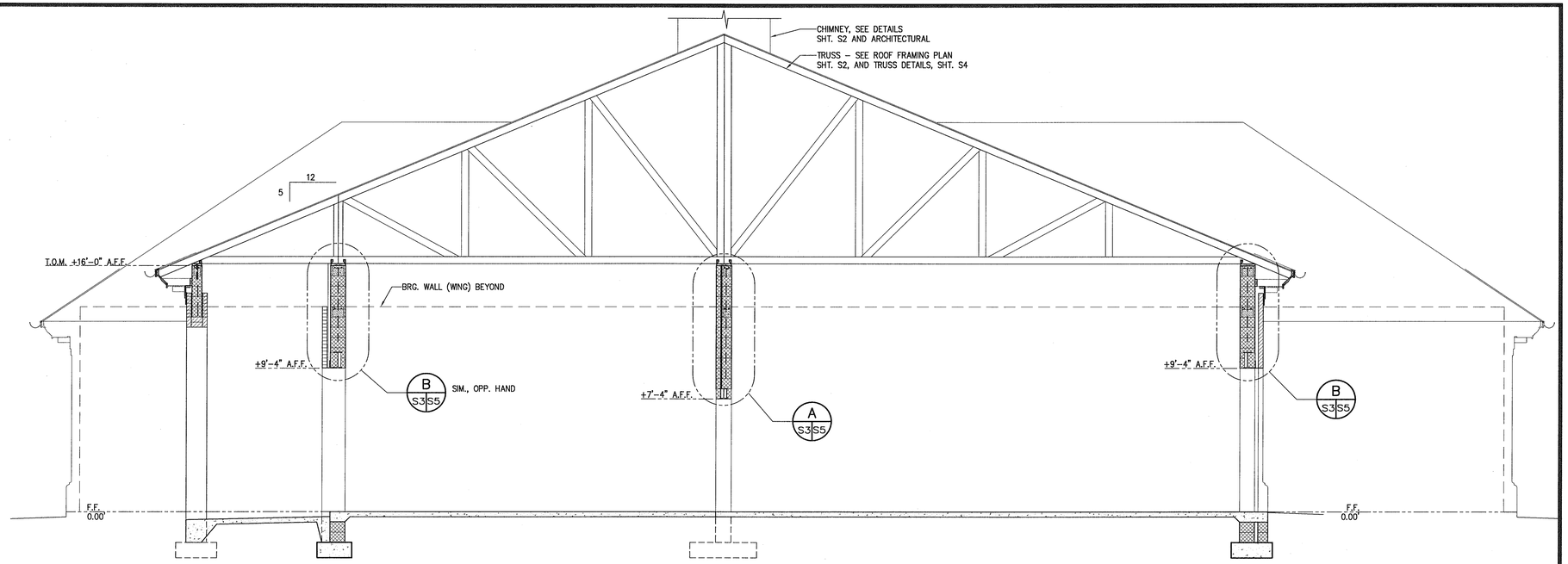

1 S3 BLDG. SECTION THRU CENTER
SCALE: 1/4"=1'-0"
SECT-THRU-CENTER
S1, S2

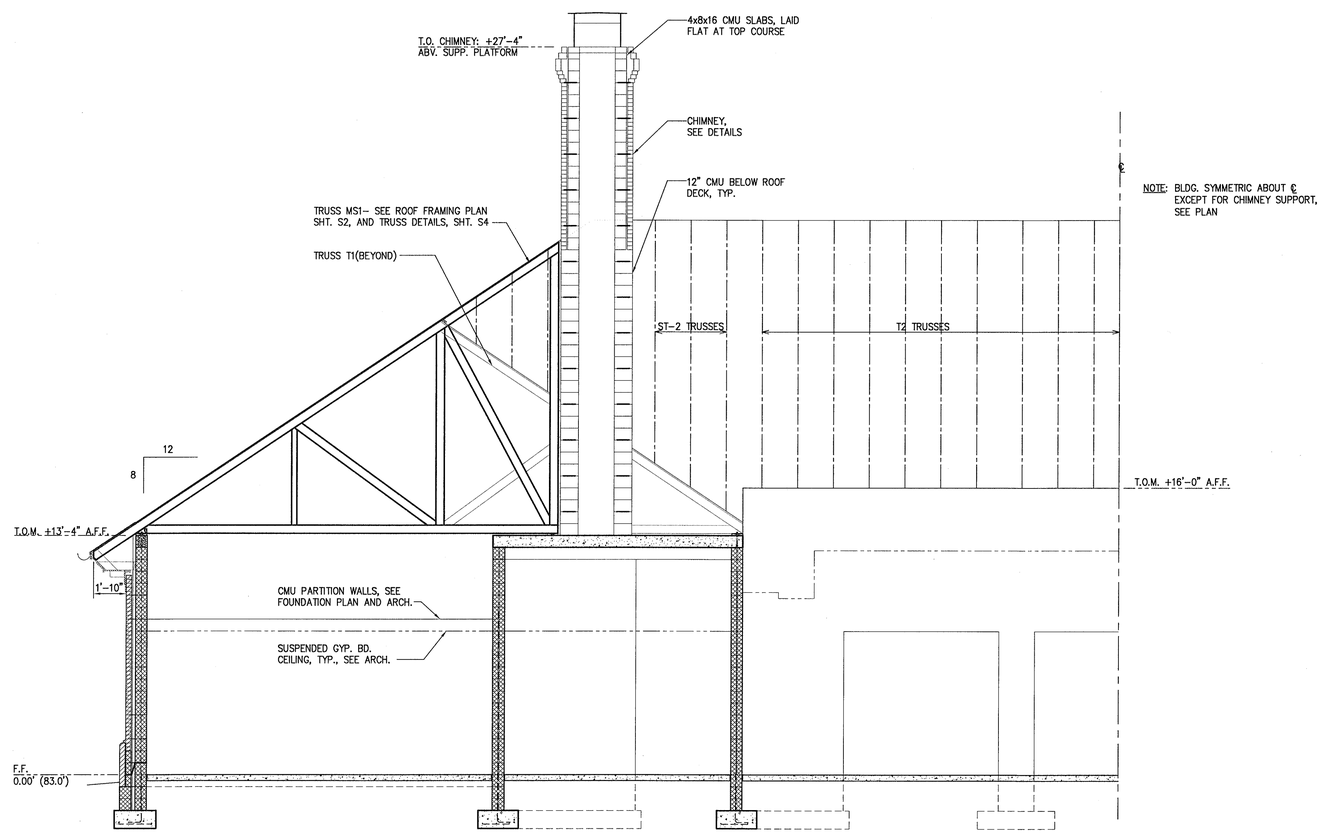

2 S3 SECTION THRU BLDG.
SCALE: 1/4"=1'-0"
SECT-THRU-BLDG
S1, S2

ENGINEERS • ARCHITECTS • PLANNERS
DJG INC.
449 McLaws Circle, Williamsburg, VA 23185
Phone: 757.253.0673 Fax: 757.253.2319
Norfolk-Virgina Beach: 757.874.5015
www.djginc.com
COMMITTED TO EXCELLENCE

COMMONWEALTH OF VIRGINIA
DANIEL J. DE YOUNG
No. 3617
PROFESSIONAL ENGINEER
8-3-06

THIS DOCUMENT CONTAINS INFORMATION PROPRIETARY TO DJG, INC. AND IS FURNISHED IN CONFIDENCE, IN AN INSTRUMENT OF SERVICE, FOR THE LIMITED PURPOSE OF EVALUATION, BIDDING OR PROPOSAL, AND ACCEPTANCE. THIS DOCUMENT, OR ANY PART THEREOF, MAY NOT BE USED IN WHOLE OR IN PART, OR THE MODIFICATION OF ANY DETAIL OR DESIGN WITHOUT THE EXPRESSED, WRITTEN CONSENT OF DJG, INC. COPYRIGHT (C) 2006.

REVISIONS

	DATE	DESCRIPTION

BUILDING SECTIONS AND DETAILS

VIRGINIA DEPARTMENT OF TRANSPORTATION
NEW KENT SAFETY REST AREA AND INFORMATION CENTER
NEW KENT COUNTY, VIRGINIA

SCALE	DESIGNED	DRAWN	CHECKED	DATE
AS NOTED	RNK	RNK	KMS	8/3/06

COMMISSION NUMBER
2070030

SHEET NUMBER
S3

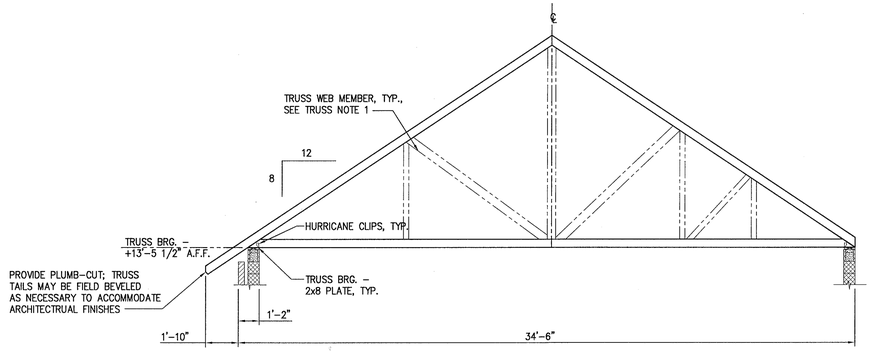

ELEVATION - TRUSS T1

SCALE: 1/4"=1'–0"

NOTE:
T1 TRUSS FOR SOUTH WING SHOWN, TYPICAL NORTH WING, OPPOSITE HAND

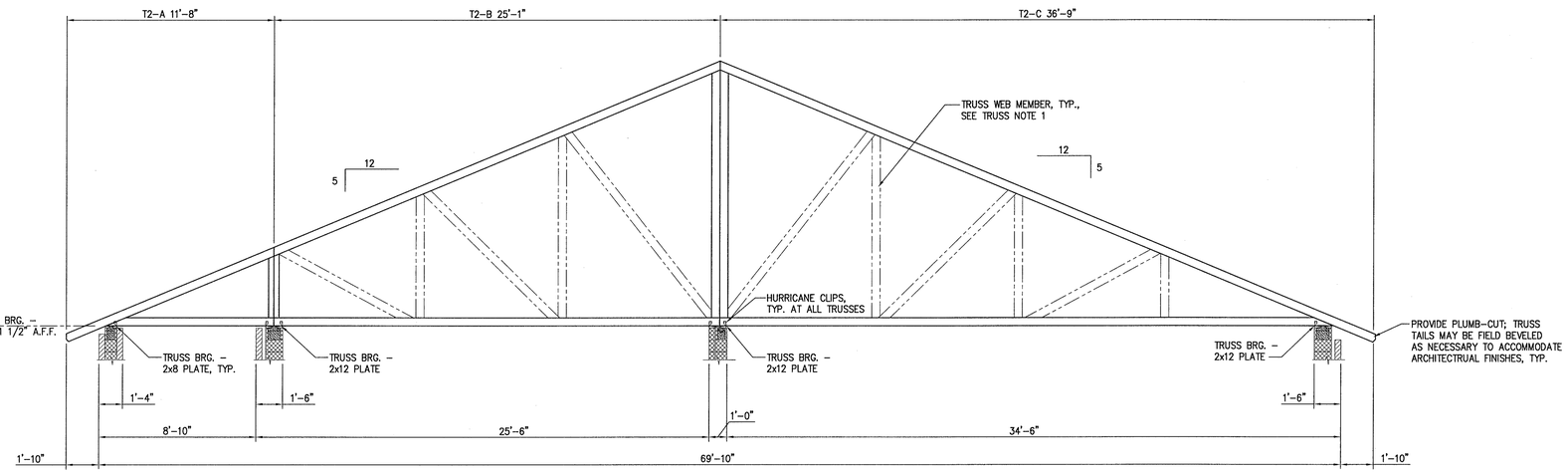

ELEVATION - TRUSS T2

SCALE: 1/4"=1'–0"

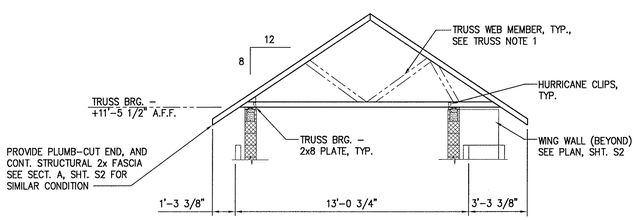

ELEVATION - TRUSS UT1

SCALE: 1/4"=1'–0"

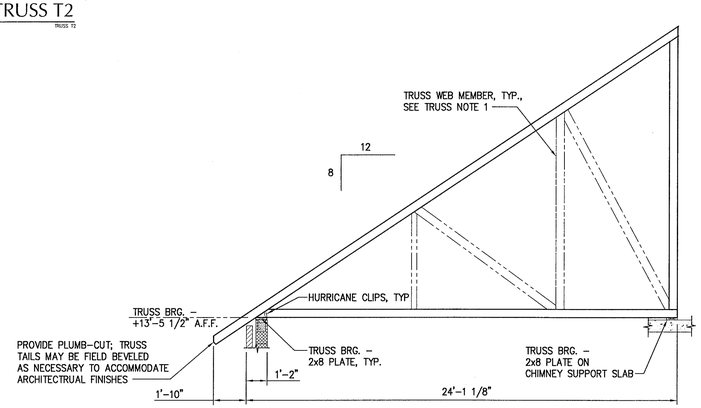

ELEVATION - TRUSS MS1

SCALE: 1/4"=1'–0"

TRUSS NOTES

1. THE METAL–PLATE CONNECTED WOOD TRUSS SYSTEM SHALL BE FABRICATOR DESIGNED; THE TRUSS SYSTEM SHALL INCLUDE ALL TEMPORARY AND PERMANENT BRACING, BLOCKING AND ACCESSORIES AS REQUIRED FOR CONSTRUCTION AND TO PROVIDE A COMPLETE STRUCTURAL SYSTEM FOR SUPPORT OF THE INDICATED SHEATHING. LAYOUT OF TRUSS WEBS SHOWN IS DIAGRAMMATIC; FABRICATOR SHALL SUBMIT SHOP DRAWINGS OF PROPOSED TRUSSES, INDICATING LAYOUT PLAN, ACTUAL CONFIGURATION OF INDIVIDUAL TRUSSES, MEMBER SIZES, TRUSS REACTIONS, INSTALLATION INSTRUCTIONS AND TYPICAL DETAILS; TRUSS SPACING SHALL NOT EXCEED 2'–0" O.C.
2. TRUSSES SHALL BE DESIGNED TO ACCOMODATE THE DEAD, LIVE, AND WIND LOADS INDICATED BELOW; TRUSS SHOP DRAWINGS SHALL BE SEALED BY AN ENGINEER REGISTERED IN THE STATE OF VIRGINIA.

DEAD LOAD:	(TOP CHORD)	10 PSF	
	(BOTTOM CHORD)	10 PSF	
LIVE LOAD:	(BOTTOM CHORD WHERE CLEAR DIST. BETWEEN TOP AND BOTTOM CHORDS IS 42" OR MORE)	25 PSF	(ATTIC, NON–RESIDENTIAL NON–STORAGE)

3. WIND LOADS SHALL BE DETERMINED AS INDICATED IN NOTE 1 ON SHEET S1. DESIGN FOR WIND LOAD BASED ON "COMPONENTS AND CLADDING" OF THE STRUCTURE.
4. TRUSSES SHALL BE TEMPORARILY BRACED UNTIL ALL PERMANENT BRACING AND ROOF DECKING IS INSTALLED; TEMPORARY BRACING SHALL BE INCLUDED IN THE TRUSS DESIGN, AND SHALL BE SHOWN ON THE TRUSS SHOP DRAWINGS.
5. ALL TRUSSES SHALL BE ANCHORED AT EACH END WITH HURRICANE STRAPS CAPABLE OF RESISTING THE UPLIFT LOADS REQUIRED BY 2003 VUSBC. UPLIFT DEVICES SHALL BE SUBMITTED AS SHOP DRAWING SUBMITTALS.

ENGINEERS • ARCHITECTS • PLANNERS
449 McLaws Circle, Williamsburg, VA 23185
Phone: 757.253.0673 Fax: 757.253.2319
Norfolk-Virginia Beach: 757.874.5015
www.djginc.com
DJG INC.
COMMITTED TO EXCELLENCE

COMMONWEALTH OF VIRGINIA
DANIEL J. DE YOUNG
No. 3317
6-3-06
PROFESSIONAL ENGINEER

THIS DOCUMENT CONTAINS INFORMATION PROPRIETARY TO DJG, INC. AND IS FURNISHED IN CONFIDENCE AS AN INSTRUMENT OF SERVICE FOR THE LIMITED PURPOSE OF EVALUATION, BIDDING OR CONSTRUCTION WITHIN A PROJECT SPECIFIED TO DJG, INC. OWNERSHIP IS RETAINED BY DJG, INC. AND THE INFORMATION IS TO BE RETURNED UPON REQUEST. IN WHOLE OR IN PART, OR THE MODIFICATION OF ANY DETAIL OR DESIGN WITHOUT THE EXPRESSED, WRITTEN CONSENT OF DJG, INC. IS PROHIBITED. ALL RIGHTS RESERVED. COPYRIGHT (C) 2006.

REVISIONS

NO.	DATE	DESCRIPTION

TRUSSES AND FRAMING DETAILS

VIRGINIA DEPARTMENT OF TRANSPORTATION
NEW KENT SAFETY REST AREA AND INFORMATION CENTER
NEW KENT COUNTY, VIRGINIA

SCALE	DESIGNED	DRAWN	CHECKED	DATE
AS NOTED	RNK	RNK	KMS	8/3/06

COMMISSION NUMBER
2070030

SHEET NUMBER
S4

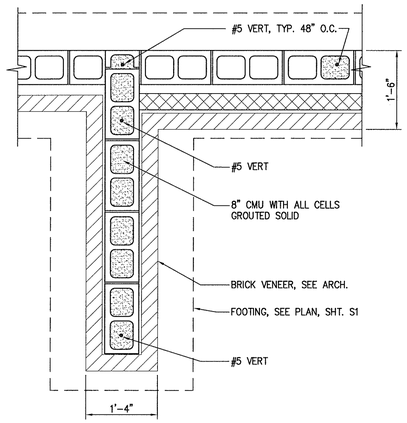

C / S1 S5 DETAIL - 8" CMU WALL @ ARCHES
SCALE: 3/4"=1'-0"
ARCH-PIER-1

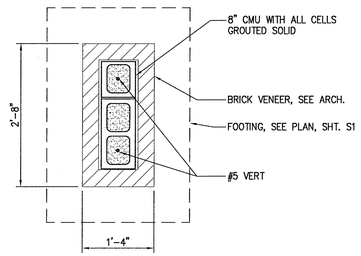

D / S1 S5 DETAIL - 8" CMU PIER BET. ARCHES
SCALE: 3/4"=1'-0"
ARCH-PIER-2

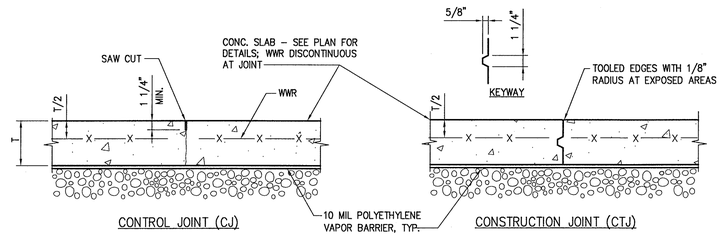

H / S1 S5 TYPICAL SLAB JOINTS
SCALE: 1 1/2"=1'-0"

NOTES:
1. CONSTRUCTION JOINT MAY BE SUBSTITUTED FOR CONTROL JOINTS SHOWN ON PLAN
2. PROVIDE SUPPORTS FOR WWR

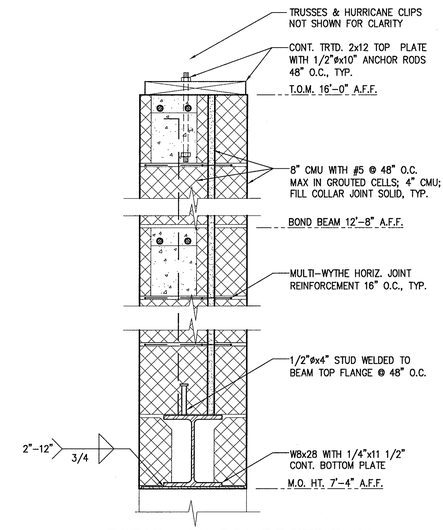

A / S3 S5 DETAIL - 12" COMPOSITE CMU INTERIOR BEARING WALL/ LINTEL
SCALE: 1 1/2"=1'-0"
LINTEL L3

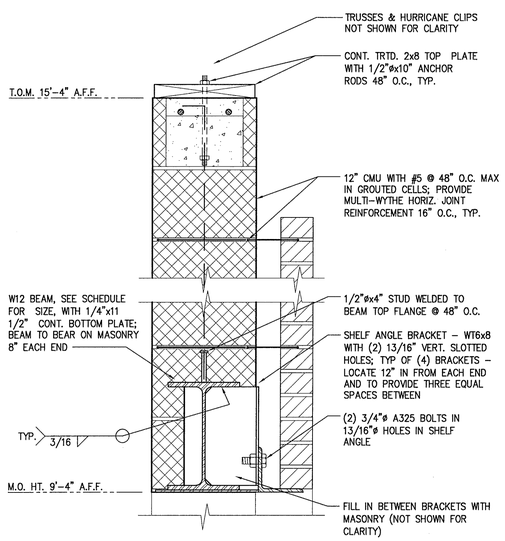

B / S3 S5 DETAIL - 12" CMU EXTERIOR BEARING WALL LINTEL
SCALE: 1 1/2"=1'-0"
LINTEL 12 CMU BRG WALL

NOTES:
1. PROVIDE WEEP HOLES IN FIRST COURSE ABOVE LINTEL AT 24" O.C., TYP.
2. SEE ARCHITECTURAL DETAILS FOR FLASHING AND BRICK VENEER.

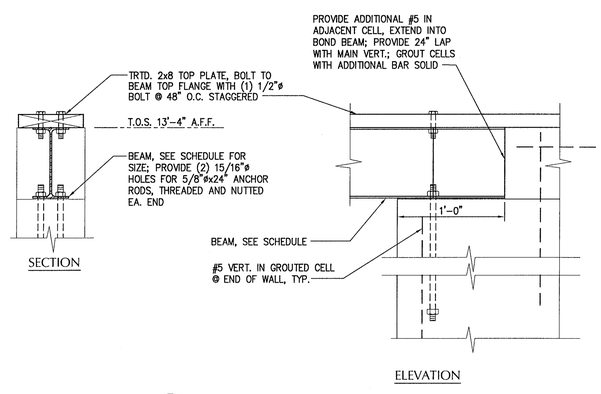

C / S2 S5 DETAILS - "L4" LINTEL
SCALE: 1 1/2"=1'-0"
LINTEL L4

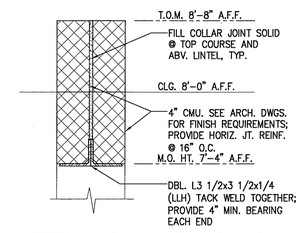

D / S2 S5 DETAIL - CMU INTERIOR NON-BRG. PARTITION WALL LINTEL & L6
SCALE: 1 1/2"=1'-0"
CMU LINTEL PART WALL

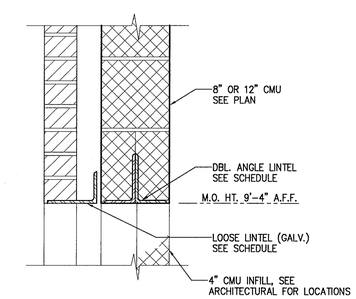

E / S2 S5 DETAIL - WINDOW LINTEL, TYP.
SCALE: 1 1/2"=1'-0"
LINTEL-EXT & WALL

NOTES:
1. PROVIDE WEEP HOLES IN FIRST COURSE ABOVE LINTEL AT 24" O.C., TYP.
2. SEE ARCHITECTURAL DETAILS FOR FLASHING AND BRICK VENEER.

ENGINEERS • ARCHITECTS • PLANNERS
449 McLaws Circle, Williamsburg, VA 23185
Phone: 757.253.0673 Fax: 757.253.2319
Norfolk-Virginia Beach: 757.874.5015
www.dgainc.com
DGA INC.
COMMITTED TO EXCELLENCE

COMMONWEALTH OF VIRGINIA
DANIEL J. DE YOUNG
No. 3317
3-3-06
PROFESSIONAL ENGINEER

THIS DOCUMENT CONTAINS INFORMATION PROPRIETARY TO DGA, INC. AND IS FURNISHED IN CONFIDENCE AS AN INSTRUMENT OF SERVICE FOR THE LIMITED PURPOSE OF EVALUATION, BIDDING AND WORK IN PROGRESS REVIEW. NO RIGHT TO THE INFORMATION CONTAINED HEREIN IN WHOLE OR IN PART, OR THE MODIFICATION OF ANY METAL OR DESIGN WITHOUT THE EXPRESSED, WRITTEN CONSENT OF DGA, INC. IS PROHIBITED. ALL RIGHTS RESERVED. COPYRIGHT (C) 2006.

REVISIONS

NO.	DATE	DESCRIPTION

STRUCTURAL DETAILS

VIRGINIA DEPARTMENT OF TRANSPORTATION
NEW KENT SAFETY REST AREA AND INFORMATION CENTER
NEW KENT COUNTY, VIRGINIA

SCALE AS NOTED	DESIGNED RNK	DRAWN RNK	CHECKED KMS	DATE 8/3/06

COMMISSION NUMBER **2070030**

SHEET NUMBER **S5**

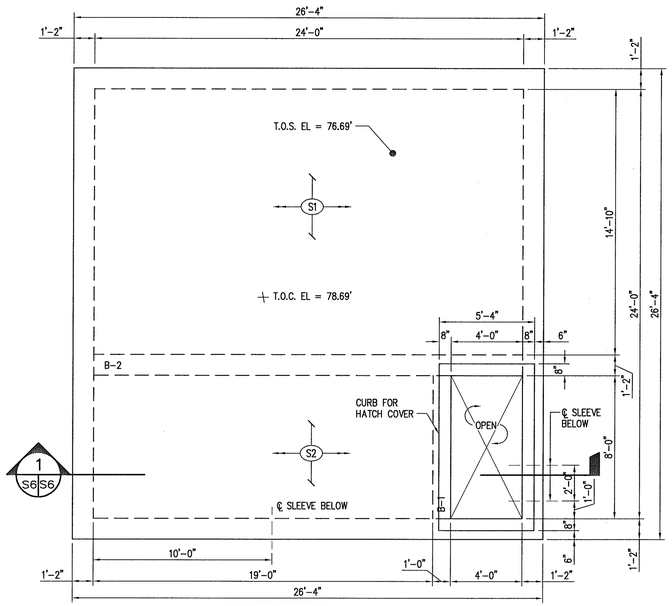

1 S6 S6

CISTERN TANK PLAN

SCALE: 1/4" = 1'-0"

xs-TankPlan.dwg

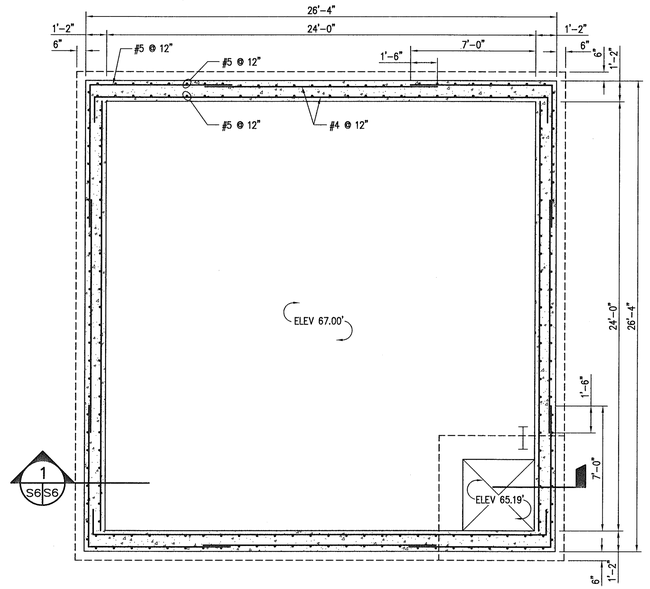

1 S6 S6

CISTERN TANK BASE

SCALE: 1/4" = 1'-0"

xs-FootingPlan.dwg

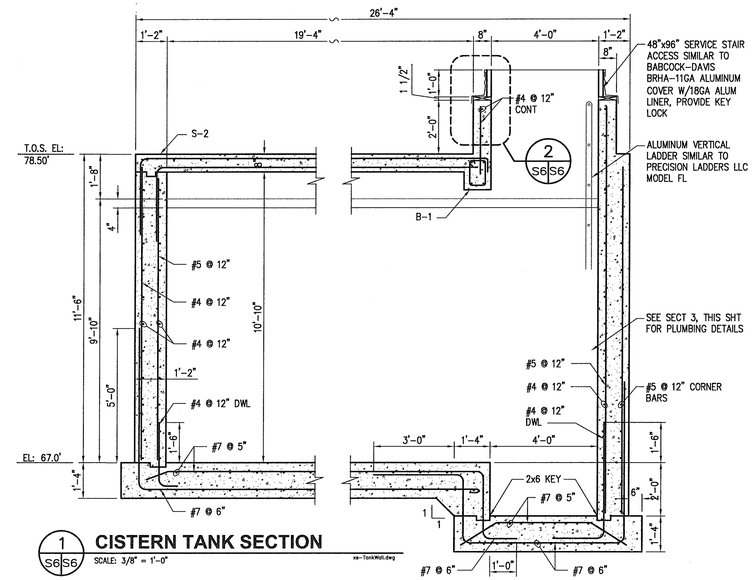

1 S6 S6

CISTERN TANK SECTION

SCALE: 3/8" = 1'-0"

xs-TankWall.dwg

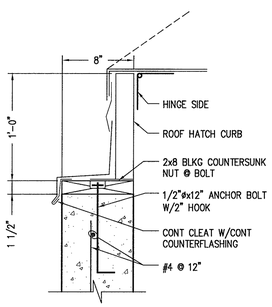

2 S6 S6

ACCESS HATCH DETAIL

SCALE: 1 1/2"=1'-0"

xs-AccessHatch.dwg

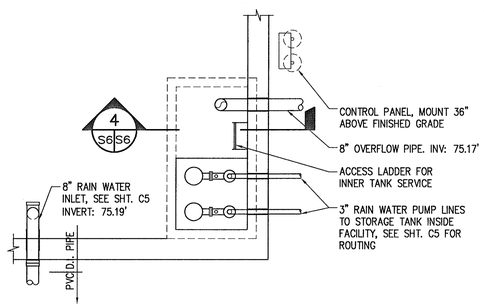

TANK PLUMBING PLAN

SCALE: 1/4" = 1'-0"

xs-PlumPlan.dwg

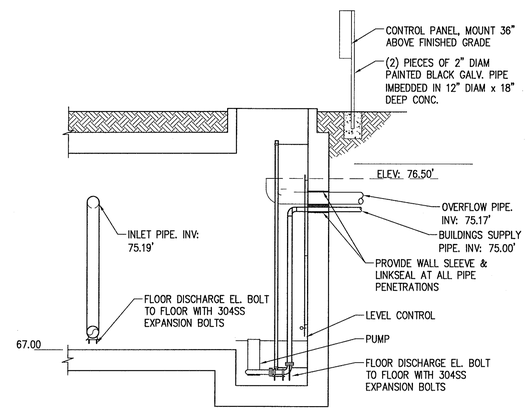

3 S6 S6

SECTION - PLUMBING

SCALE: 1/4" = 1'-0"

xs-PlumSect.dwg

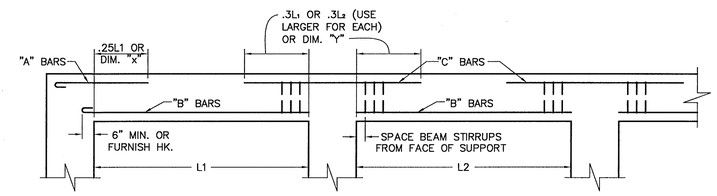

BAR DIAGRAM FOR SLABS & BEAMS

- FOR "C" BARS – WHEN SIZE & QUANTITY SCHEDULED IN ADJACENT SPANS IS DIFFERENT, USE THE SIZE & QUANTITY HAVING THE BREATEST CROSS SECTIONAL AREA FOR "C" BARS AT THE COMMON SUPPORT.

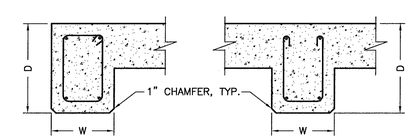

TYPICAL BEAM DETAILS

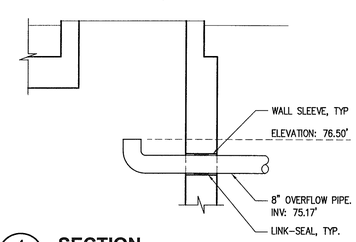

4 S6 S6

SECTION

SCALE: 3/8" = 1'-0"

xs-OverflowPipe.dwg

BEAM SCHEDULE

BEAM DESIGNATION	BEAM DIMENSIONS		REINFORCING					REMARKS
	W	D	"A" BARS	"B" BARS	"C" BARS	STIRRUPS	STIRRUP SPACING	
B-1	12"	16"	(2) #4	(2) #4	–	#3	1 @ 4", REM @ 6" (CLOSED)	–
B-2	14"	20"	(4) #8	(4) #9	–	#3	1 @ 4", 2 @ 8", REM @ 12"	–
B-3 SEE SHT. S2	8"	16"	(2) #6	(2) #5	(2) #6	#3	1 @ 4", 8 @ 6", REM 8"	"A" & "C" BARS CONTINUOUS
B-4 SEE SHT. S2	8"	16"	(2) #4	(2) #6	–	#3	1 @ 4", 3 @ 6", REM 8"	"A" BARS CONTINUOUS

SLAB SCHEDULE

BEAM DESIGNATION	THICKNESS	DIRECTION	REINFORCING			REMARKS
			"A" BARS	"B" BARS	"C" BARS	
S-2	8"	——/——/	#5 @ 12"	#5 @ 8"	#5 @ 6"	–
		OTHER	#5 @ 12"	#5 @ 12"	–	–
S-2	8"	——/——/	#5 @ 12"	#4 @ 12"	#5 @ 6"	"C" CARS CONTINUOUS ACROSS SPAN
		OTHER	#5 @ 12"	#4 @ 12"	–	–
S-3 SEE SHT. S2	8"	——/——/	#4 @ 10"	#5 @ 10"	–	–
		OTHER	#4 @ 10"	#4 @ 10"	–	–
S-4 SEE SHT. S2	8"	——/——/	#5 @ 6"	#4 @ 12"	#5 @ 6"	"A" & "C" CARS CONTINUOUS
		OTHER	#4 @ 12"	#4 @ 12"	#4 @ 12"	"C" CARS CONTINUOUS @ CANT NORTH EDGE

GRAPHIC SCALE

0 2 4 6 8 10 12
SCALE: 1/4" = 1'-0"

0 1 2 3 4 5 6 7 8
SCALE: 3/8" = 1'-0"

0 6" 1 2
SCALE: 1-1/2" = 1'-0"

ENGINEERS • ARCHITECTS • PLANNERS
449 McLaws Circle, Williamsburg, VA 23185
Phone: 757.253.0673 Fax: 757.253.2319
Norfolk-Virginia Beach: 757.874.5015
www.dgainc.com
DJG INC.
COMMITTED TO EXCELLENCE

COMMONWEALTH OF VIRGINIA
DANIEL J. DE YOUNG
No. 28517
8-3-06
PROFESSIONAL ENGINEER

THIS DOCUMENT CONTAINS INFORMATION PROPRIETARY TO DJG, INC. AND IS FURNISHED IN CONFIDENCE AN INSTRUMENT OF SERVICE FOR THE LIMITED PURPOSE OF EVALUATION, BIDDING OR CONSTRUCTION. NO OTHER USE OR REPRODUCTION, IN WHOLE OR IN PART, OR THE MODIFICATION OF ANY DETAIL OR DESIGN WITHOUT THE EXPRESSED, WRITTEN CONSENT OF DJG, INC. IS PROHIBITED. ALL RIGHTS RESERVED. COPYRIGHT © 2006.

REVISIONS

#	DATE	DESCRIPTION

CISTERN PLAN, DETAILS, AND PLUMBING

VIRGINIA DEPARTMENT OF TRANSPORTATION
NEW KENT SAFETY REST AREA AND INFORMATION CENTER
NEW KENT COUNTY, VIRGINIA

SCALE	DESIGNED	DRAWN	CHECKED	DATE
AS NOTED	DJD	CSH	KMS	8/3/06

COMMISSION NUMBER
2070030

SHEET NUMBER
S6

NOTES

1 SIGN TYPE C "A-3 OCCUPANCY: MAXIMUM 297 OCCUPANTS"

LEGEND

——→ X	EGRESS PATH/DIRECTION NUMBER OF OCCUPANTS
— — —	COMMON PATH OF TRAVEL FROM MOST REMOTE POINT
F.E.C.	FIRE EXTINGUISHER CABINET
F.E.	FIRE EXTINGUISHER (WALL HOOK MOUNT)

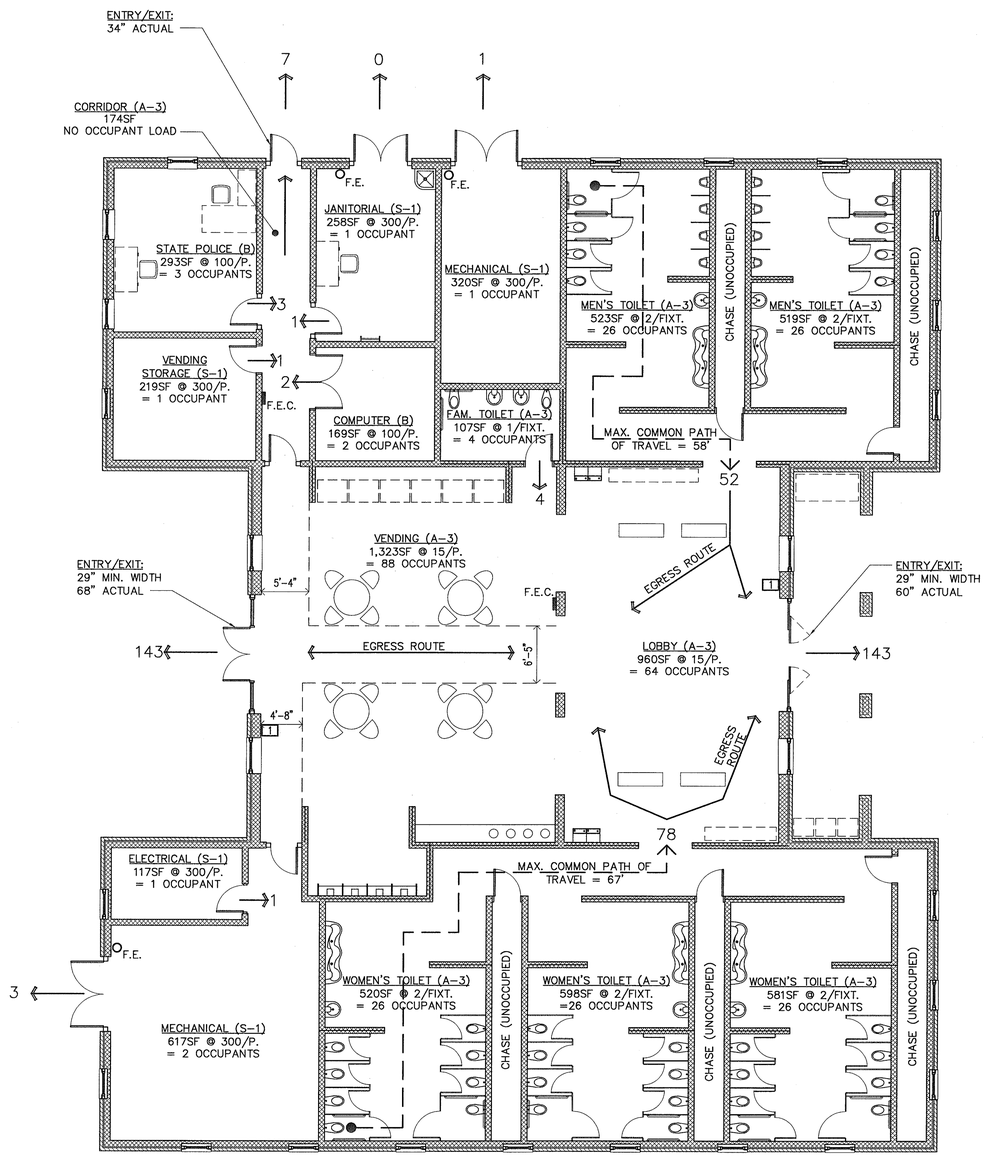

CODE SUMMARY

MAIN REST AREA & INFORMATION CENTER BUILDING

APPLICABLE CODE:	2003 VIRGINIA UNIFORM STATEWIDE BUILDING CODE
OCCUPANCY GROUP(S):	NON-SEPARATED MIXED USE: A-3 WITH S-1 & B
TYPE OF CONSTRUCTION:	V-B (COMBUSTIBLE, UNPROTECTED)
BASIC ALLOWABLE AREA (A-3):	6,000 SF
100% FRONTAGE INCREASE (ADD 75%):	4,500 SF
TOTAL ALLOWABLE AREA:	10,500 SF
TOTAL BUILDING AREA:	9,058 G.S.F.
OCCUPANT LOAD:	
A-3 OCCUPANCY @ 15 SF/PERSON:	152
B OCCUPANCY @ 100 SF/PERSON:	5
S-1 OCCUPANCY @ 300 SF/PERSON:	6
TOILETS AS INDICATED ON PLAN:	134
TOTAL OCCUPANT LOAD:	297

MAINTENANCE BUILDING

APPLICABLE CODE:	2003 VIRGINIA UNIFORM STATEWIDE BUILDING CODE
OCCUPANCY GROUP:	S-1
TYPE OF CONSTRUCTION:	V-B (COMBUSTIBLE, UNPROTECTED)
BASIC ALLOWABLE AREA (A-3):	9,000 SF
TOTAL BUILDING AREA:	316 GSF
OCCUPANT LOAD:	1 (300 SF/PERSON)

IN ACCORDANCE WITH VUSBC SECTION 903.2.1.3, AN AUTOMATIC FIRE SPRINKLER SYSTEM IS NOT REQUIRED WHEN THE TOTAL OCCUPANT LOAD IS NOT OVER 300.

IN ACCORDANCE WITH VUSBC SECTION 907.2.1, A FIRE ALARM SYSTEM IS NOT REQUIRED WHEN THE TOTAL OCCUPANT LOAD IS NOT OVER 300.

THE DESIGN FOR THIS FACILITY DOES NOT CONTAIN ANY FIRE RATED ASSEMBLIES OR OPENING PROTECTIVES.

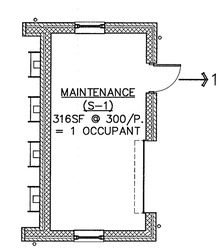

PROJECT NORTH TRUE NORTH

FIRE PROTECTION PLAN

SCALE: 1/8" = 1'-0"

ENGINEERS • ARCHITECTS • PLANNERS
449 McLaws Circle, Williamsburg, VA 23185
Phone: 757.253.0673 Fax: 757.253.2319
Norfolk-Virginia Beach: 757.874.5015
www.dlginc.com
DLG INC.
COMMITTED TO EXCELLENCE

COMMONWEALTH OF VIRGINIA
MATTHEW GORDON GRIFFIN
No. 011104
ARCHITECT

REVISIONS

DATE	DESCRIPTION

THIS DOCUMENT CONTAINS INFORMATION PROPRIETARY TO D.L.G., INC. AND IS FURNISHED IN CONFIDENCE FOR THE PURPOSE OF MAKING BIDS, OBTAINING PERMITS, AND REVIEW, OR CONSTRUCTION OF A SPECIFIC PROJECT. THE REPRODUCTION OF THIS DOCUMENT, IN WHOLE OR IN PART, WITHOUT THE WRITTEN CONSENT OF D.L.G., INC. IS PROHIBITED. ALL RIGHTS RESERVED. COPYRIGHT (C) 2006.

FIRE PROTECTION PLAN

VIRGINIA DEPARTMENT OF TRANSPORTATION
NEW KENT SAFETY REST AREA
AND INFORMATION CENTER
NEW KENT COUNTY, VIRGINIA

SCALE	DESIGNED	DRAWN	CHECKED	DATE
AS NOTED	MGB	MGB	MGB	8/3/06

COMMISSION NUMBER
2070030

SHEET NUMBER
FP1

PLUMBING

—— • ——	RECYCLED WATER
—— - ——	DOMESTIC COLD WATER (DCW)
—— - - —	DOMESTIC HOT WATER (DHW)
— HWR —	HOT WATER RETURN
— HWS —	HOT WATER SUPPLY
—CD—	CONDENSATE DRAIN
— SD —	STORM DRAIN
	HEAT TRACED PIPE
— — — —	VENT PIPING
	WASTE PIPING
	PIPING BELOW FLOOR.
— CD —	CONDENSATE DRAIN
— D —	DRAIN
— G —	NATURAL GAS LINE
— F —	FIRE PROTECTION WATER SUPPLY
— SP —	AUTOMATIC FIRE SPRINKLER & STANDPIPE

MISCELLANEOUS SYMBOLS

- POINT OF DISCONNECTION
- POINT OF CONNECTION NEW TO EXISTING
- DENOTES LOCATION OF FLOOR PENETRATION
- (1) NEW WORK PLAN REFERENCE NOTE
- (1) DEMOLITION PLAN REFERENCE NOTES
- (1) REVISION / ADDENDUM NUMBER
- NUMBER INDICATES SECTION LETTER INDICATES DETAIL, RISER OR ENLARGED PLANS
- SHEET NUMBER WHERE SECTION, DETAIL,RISER OR ENLARGED PLAN IS DRAWN
- SHEET NUMBER WHERE SECTION, DETAIL, RISER OR ENLARGED PLAN IS TAKEN

FITTINGS

- CAP
- DROP / RISE IN PIPING
- ELBOW, TURNED DOWN
- ELBOW, TURNED UP
- INCREASER, CONCENTRIC
- REDUCER, CONCENTRIC
- REDUCER, ECCENTRIC
- REDUCER, ECCENTRIC STRAIGHT INVERT
- REDUCER, ECCENTRIC STRAIGHT CROWN
- TEE, OUTLET UP
- TEE, OUTLET DOWN
- UNION, SCREWED
- UNION, FLANGED
- VALVE IN RISER

VALVES

- 2-WAY CONTROL VALVE
- 3-WAY CONTROL VALVE
- ANGLE VALVE
- BALANCING VALVE
- BALANCING VALVE
- BALANCING VALVE W/FLOW TAPS
- BALL VALVE
- BUTTERFLY VALVE
- CHECK VALVE
- CONTROL VALVE
- FLOW CONTROL BALANCING VALVE
- AUTOMATIC FLOW CONTROL VALVE (AFV)
- FCV AUTOMATIC FLOW CONTROL VALVE
- GAS COCK OR VALVE
- GAS PRESSURE REGULATOR
- GATE VALVE
- GATE VALVE
- GATE VALVE IN RISER
- GLOBE VALVE
- LIFT CHECK VALVE
- MOTOR OPERATED VALVE (SPECIFY TYPE)
- PLUG VALVE
- PRESSURE REDUCING VALVE (PRV)
- P PRESSURE RELIEF VALVE
- RELIEF VALVE
- RV RELIEF VALVE
- SELF-OPERATED VALVE (THERMO, VAPOR PRESSURE)
- SOLENOID OPERATED VALVE (ELECTRIC)
- S S SUPERVISED VALVE
- T&P T&P TEMPERATURE-PRESSURE RELIEF VALVE

DOCUMENT LINE TYPES

- ITEMS TO BE PROVIDED, NEW WORK (SOLID)

PIPING SPECIALTIES

AV	AIR VENT, AUTOMATIC
MV	AIR VENT, MANUAL
	ALIGNMENT GUIDE
	ANCHOR, INTERMEDIATE
	PIPE ANCHORS
	AQUASTAT
C.O. C.O.	CLEANOUT PLUG
	DIRECTION OF PITCH
	DIRECTION OF FLOW
EJ-1	EXPANSION JOINT
	EXPANSION JOINT
	EXPANSION LOOP
	FIRE DEPARTMENT CONNECTION
SH	FIRE SPRINKLER HEAD
	PENDANT FIRE SPRINKLER HEAD
	SIDEWALL FIRE SPRINKLER HEAD
	SIDEWALL FIRE SPRINKLER HEAD
	UPRIGHT FIRE SPRINKLER HEAD
	FIXTURE STOP
	FLEXIBLE GAS CONNECTOR
	FLEXIBLE PIPE CONNECTION
CO	FLOOR CLEANOUT
	FLOOR DRAIN
FD-A	FLOOR DRAIN
FS-A	FLOOR SINK
M	GAS METER OR WATER METER
R	GAS REGULATOR
	HOSE BIBB, WALL HYDRANT
	RECESSED HOSE BIBB OR WALL HYDRANT
WH-1	RECESSED HOSE BIBB OR WALL HYDRANT
	MANUAL AIR VENT (MAV)
	PRESSURE GAGE (RANGE AS INDICATED)
	PRESS GAGE TAP W/CAP AND PET COCK
	PRESSURE GAUGE AND COCK
	PUMP
	STRAINER
WCO	WALL CLEANOUT
SA(B)	WATER HAMMER ARRESTER: MODEL-B; MUST MEET PDI WH-201 CERTIFICATION
CO	YARD CLEANOUT OR CLEANOUT TO GRADE
HB	HOSE BIBB; WOODFORD MODEL HCB67
WH	WALL HYDRANT; WOODFORD MODEL 65
2"	PIPE SIZE CALL OUT
P-1	FIXTURE DESIGNATION, SEE SCHEDULE SHEET P-4

ABBREVIATIONS

ABV.CLG.	ABOVE CEILING
AC	AIR COMPRESSOR
ACU	AIR CONDITIONING UNIT
AD	ACCESS DOOR (12X12 MIN)
AFF	ABOVE FINISHED FLOOR
AFG	ABOVE FINISHED GRADE
AHU	AIR HANDLING UNIT
ARCH	ARCHITECTURAL
AS	AIR SEPARATOR
BDD	BACKDRAFT DAMPER
BFP	BACKFLOW PREVENTER
BTUH	BRITISH THERMAL UNITS PER HOUR
CAP	CEILING ACCESS PANEL (12X12 MIN)
CCC-1	CLOSED CIRCUIT COOLER
CFM	CUBIC FEET PER MINUTE
CONT	CONTINUATION
CP	CONDENSATE PUMP
CU	CONDENSING UNIT
CUH-1	CABINET UNIT HEATER
DF	DRINKING FOUNTAIN
DHU	DEHUMIDIFIER UNIT
DL	DOOR LOUVER
DN	DOWN
DTC	DATA TERMINAL CABINET
EAT	ENTERING AIR TEMPERATURE
EF	EXHAUST FAN
ESP	EXTERNAL STATIC PRESSURE
ET	EXPANSION TANK
EWC	ELECTRIC WATER COOLER
EWT	ENTERING WATER TEMPERATURE
EF-1	EXHAUST FAN AND NO.
F	FAHRENHEIT
FA	FREE AREA
FCU	FAN COIL UNIT
FOR	FUEL OIL RETURN
FOS	FUEL OIL SUPPLY
FOV	FUEL OIL VENT
FOG	FUEL OIL GAGE
FT	FOOT/FEET
FTR	FINNED TUBE RADIATOR
F.W.	FIRE WALL
G-1	GRILLE TYPE
GAL	GALLONS
GPH	GALLON PER HOUR
GPM	GALLON PER MINUTE
HP	HORSEPOWER
HP-1	HEAT PUMP
HW	POTABLE HOT WATER
HX	HEAT EXCHANGER
HZ	HERTZ
IL	INTAKE LOUVER
KEC	KITCHEN EQUIPMENT CONTRACTOR
L	LAVATORY
LWT	LEAVING WATER TEMPERATURE
LAT	LEAVING AIR TEMPERATURE
MAV	MANUAL AIR VENT
MBH	ONE MILLION BTUH
M.H.	MAN HOLE
MOD.	MODULATING
MVD	MANUAL VOLUME DAMPER W/ LOCKING QUADRANT
N.C.	NORMALLY CLOSED
NIC	NOT INCLUDED IN CONTRACT
NOM	NOMINAL
OA	OUTSIDE AIR
OD	OUTSIDE DIAMETER
O.F.C.I.	OWNER FURNISHED, CONTRACTOR INSTALLED
OR	OVERRIDE TIMER
OSD	OPEN SITE DRAIN
POS	POSITION
PPH	POUNDS PER HOUR
PSIG	POUNDS PER SQUARE INCH GAGE
PTAC	PACKAGED TERMINAL AIR CONDITIONER
PTHP	PACKAGED TERMINAL HEAT PUMP
RA	RETURN AIR
RD	ROOF DRAIN
RL	RAIN LEADER
SC	STEAM CONVERTER
S.D.	SMOKE DETECTOR
SD	SPLITTER DAMPER
SM	STEAM METER
SP	STATIC PRESSURE
SS	STORM SEWER
SW	SWITCH
TABU	TERMINAL AIR BLENDER UNIT
TC	TIME CLOCK
TYP	TYPICAL
UH	UNIT HEATER
UON	UNLESS OTHERWISE NOTED
UR	URINAL
V.B.	VACUUM BREAKER
V	VOLTS
VTR	VENT THRU ROOF
WC	WATER COOLER
W.G.	WATER GAGE
W.H.	WATER HEATER
W/	WITH
WPD	WATER PRESSURE DROP

PLUMBING GENERAL NOTES

PLUMBING GENERAL NOTES:

1. PROVIDE ALL MATERIALS AND EQUIPMENT AND PERFORM ALL LABOR REQUIRED TO INSTALL COMPLETE AND OPERABLE PLUMBING SYSTEMS AS INDICATED ON THE DRAWINGS, AS SPECIFIED AND AS REQUIRED BY STATE CODE (2003 VUSBC AND ADAAG PUBLISHED JULY 23, 2004).

2. RUN ALL SOIL WASTE AND VENT PIPING WITH 2% MINIMUM GRADE UNLESS OTHERWISE NOTED. HORIZONTAL VENT PIPING SHALL BE GRADED TO DRIP BACK TO THE SOIL OR WASTE PIPE BY GRAVITY.

3. ELEVATIONS AS SHOWN ON THE DRAWINGS ARE TO THE CENTERLINE OF ALL PRESSURE PIPING AND TO THE INVERT OF ALL GRAVITY PIPING.

4. ADJUST SEWER INVERTS TO KEEP TOPS OF PIPE IN LINE WHERE PIPE SIZE CHANGES.

5. MAINTAIN A MINIMUM OF 3'6" OF GROUND COVER OVER ALL UNDERGROUND WATER MAINS AND A MINIMUM 3'0" OF GROUND COVER OVER ALL UNDERGROUND SEWERS AND DRAINS.

6. PROVIDE SHUTOFF VALVES IN ALL DOMESTIC WATER PIPING SYSTEM BRANCHES IN WHICH BRANCH PIPING SERVES TWO OR MORE FIXTURES.

7. UNLESS OTHERWISE NOTED, ALL DOMESTIC COLD AND HOT WATER PIPING SHALL BE ¾ INCH SIZE.

8. UNLESS OTHERWISE NOTED, ALL PIPING IS OVERHEAD, TIGHT TO UNDERSIDE OF STRUCTURE, WITH SPACE FOR INSULATION IF REQUIRED.

9. INSTALL PIPING SO THAT ALL VALVES, STRAINERS, UNIONS, TRAPS, FLANGES, AND OTHER APPURTENANCES REQUIRING ACCESS ARE ACCESSIBLE.

10. WHERE DOMESTIC COLD AND HOT WATER PIPING DROPS INTO A PIPE CHASE, THE SIZE SHOWN FOR THE PIPE DROPS SHALL BE USED TO THE LAST FIXTURE.

11. INSTALL ALL PIPING WITHOUT FORCING OR SPRINGING.

12. ALL PIPING SHALL GRADE TO LOW POINTS. PROVED HOSE END DRAIN VALVES AT THE BOTTOM OF ALL RISERS AND LOW POINTS.

13. UNIONS AND/OR FLANGES SHALL BE INSTALLED AT EACH PIECE OF EQUIPMENT, IN BYPASSES, AND IN LONG PIPING RUNS (100 FEET OR MORE) TO PERMIT DISASSEMBLY FOR ALTERATION AND REPAIRS.

14. ALL VALVES SHALL BE ADJUSTED FOR SMOOTH AND EASY OPERATION.

15. ALL VALVES (EXCEPT CONTROL VALVES) AND STRAINERS SHALL BE FULL SIZE OF PIPE BEFORE REDUCING SIZE TO MAKE CONNECTIONS TO EQUIPMENT AND CONTROLS.

16. PROVIDE CHAINWHEEL OPERATORS FOR ALL VALVES IN EQUIPMENT ROOMS MOUNTED GREATER THAN 7'-0" ABOVE FLOOR LEVEL; CHAIN SHALL EXTEND TO 7'-0" ABOVE FLOOR LEVEL.

17. PROVIDE ALL PLUMBING FIXTURES AND EQUIPMENT WITH ACCESSIBLE STOPS.

18. UNLESS OTHERWISE NOTED, DRAINS SHALL BE INSTALLED AT THE LOW POINT OF ROOFS, AREAWAYS, FLOORS, ETC.

19. PROVIDE CLEANOUTS IN SANITARY AND STORM DRAINAGE SYSTEMS AT ENDS OF RUNS, AT CHANGES IN DIRECTION, NEAR THE BASE OF STACKS, EVERY 50 FEET IN HORIZONTAL RUNS AND ELSEWHERE AS INDICATED.

20. ALL CLEANOUTS SHALL BE FULL SIZE OF PIPE FOR PIPE SIZES 6 INCHES AND SMALLER AND SHALL BE 6 INCHES FOR PIPE SIZES LARGER THAN 6 INCHES.

21. ALL BALANCING VALVES AND BUTTERFLY VALVES SHALL BE PROVIDED WITH POSITION INDICATORS AND MAXIMUM ADJUSTABLE STOPS (MEMORY STOPS).

22. ALL VALVES SHALL BE INSTALLED SO THAT VALVE REMAINS IN SERVICE WHEN EQUIPMENT OR PIPING ON EQUIPMENT SIDE OF VALVE IS REMOVED.

23. ALL PIPING WORK SHALL BE COORDINATED WITH ALL TRADES INVOLVED. OFFSETS IN PIPING AROUND OBSTRUCTIONS SHALL BE PROVIDED AT NO ADDITIONAL COST TO THE OWNER.

24. PROVIDE FLEXIBLE CONNECTIONS IN ALL PIPING SYSTEMS CONNECTED TO PUMPS AND OTHER EQUIPMENT WHICH REQUIRE VIBRATION ISOLATION. FLEXIBLE CONNECTIONS SHALL BE PROVIDED AS CLOSE TO THE EQUIPMENT AS POSSIBLE OR AS INDICATED ON THE DRAWINGS.

ENGINEERS • ARCHITECTS • PLANNERS
449 McLaws Circle, Williamsburg, VA 23185
Phone: 757.253.0673 Fax: 757.253.2319
Norfolk-Virginia Beach: 757.874.5015
www.djginc.com
DJG INC.
COMMITTED TO EXCELLENCE

COMMONWEALTH OF VIRGINIA
KERRY PATRICK HERR
No. 041864
8.3.06
PROFESSIONAL ENGINEER

THIS DOCUMENT CONTAINS INFORMATION PROPRIETARY TO DJG, INC. AND IS FURNISHED IN CONFIDENCE AN AN INSTRUMENT OF SERVICE FOR THE LIMITED PURPOSE OF EVALUATION, BIDDING AND REVIEW, OR CONSTRUCTION OF A SPECIFIC PROJECT. REPRODUCTION OF THIS DOCUMENT, IN WHOLE OR IN PART, OR THE MODIFICATION OF ANY DETAIL OR DESIGN WITHOUT THE EXPRESSED, WRITTEN CONSENT OF DJG, INC. IS PROHIBITED. ALL RIGHTS RESERVED. COPYRIGHT (C) 2006.

REVISIONS

NO.	DATE	DESCRIPTION

GENERAL NOTES, LEGEND

VIRGINIA DEPARTMENT OF TRANSPORTATION
NEW KENT SAFETY REST AREA AND INFORMATION CENTER
NEW KENT COUNTY, VIRGINIA

SCALE	DESIGNED	DRAWN	CHECKED	DATE
AS NOTED	BHA	BHA	KPH	8/3/06

COMMISSION NUMBER
2070030

SHEET NUMBER
P1

P:\2070030\Plumbing\2070030P1.dwg, Layout1, 8/3/2006 2:44:55 PM

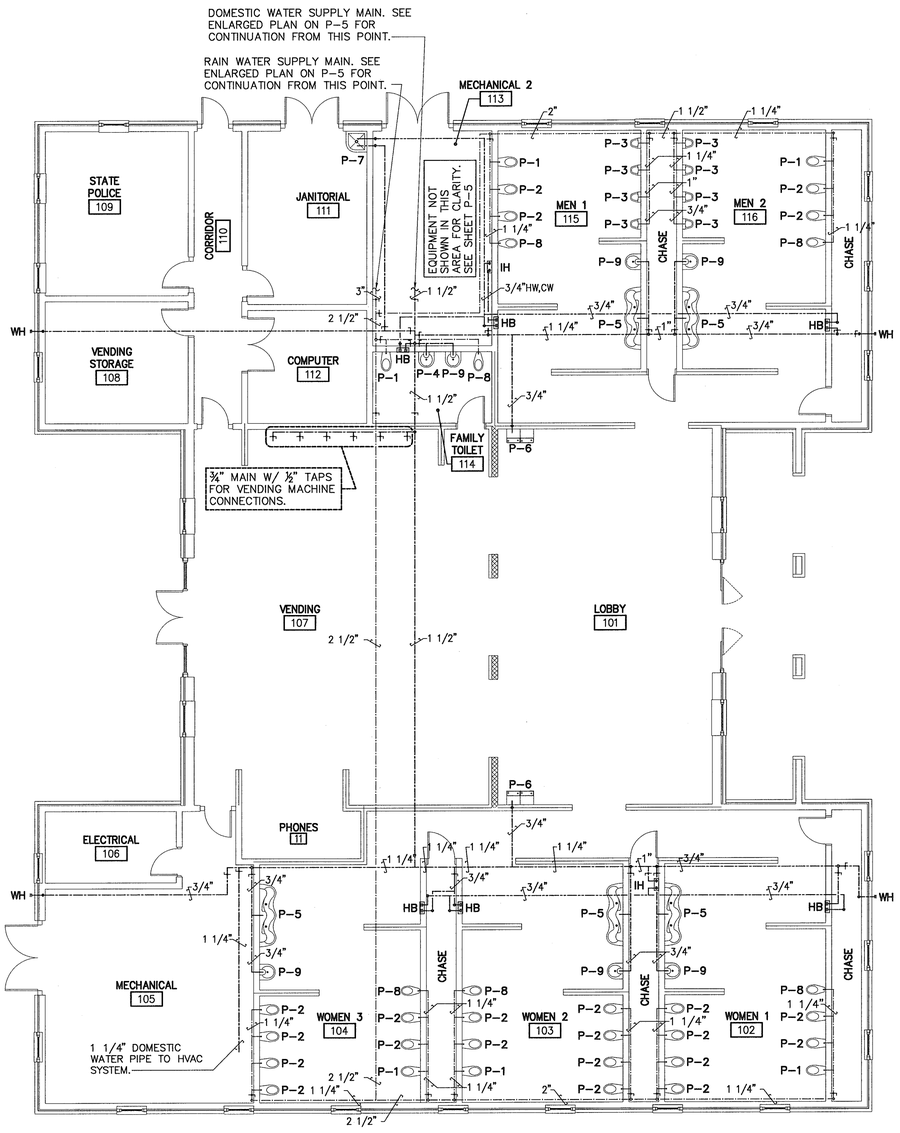

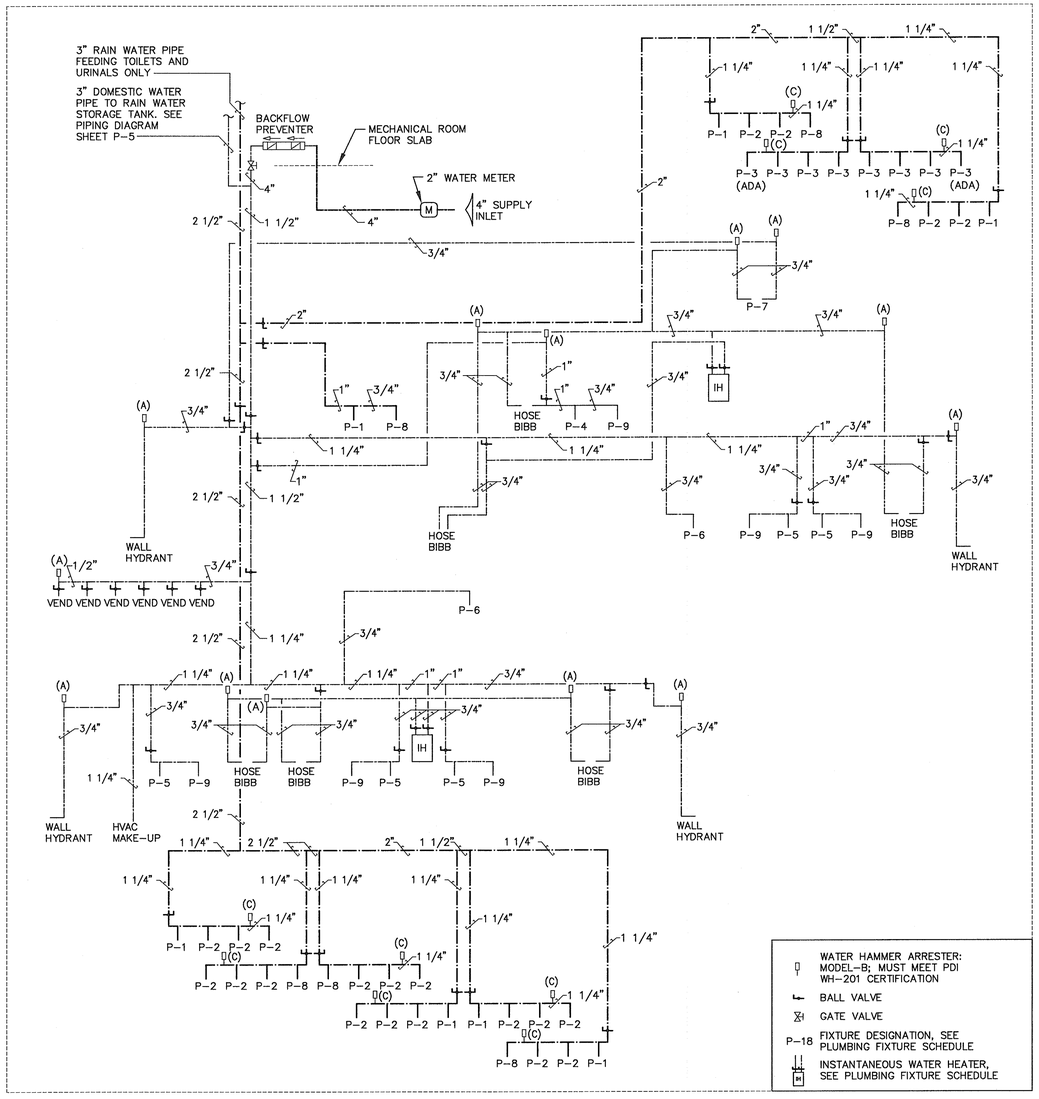

PROJECT NORTH

TRUE NORTH

SUPPLY WATER PIPING

SCALE: 1/8" = 1'-0"

SUPPLY WATER RISER DIAGRAM

SCALE: NONE

GRAPHIC SCALE

0 4 8 12 16 20 24

SCALE: 1/8" = 1'-0"

ENGINEERS • ARCHITECTS • PLANNERS
DJG INC.
449 McLaws Circle, Williamsburg, VA 23185
Phone: 757.253.0673 Fax: 757.253.2319
Norfolk-Virginia Beach: 757.874.5015
www.djginc.com
COMMITTED TO EXCELLENCE

COMMONWEALTH OF VIRGINIA
KERRY PATRICK HERR
No. 041864
8-3-06
PROFESSIONAL ENGINEER

THIS DOCUMENT CONTAINS INFORMATION PROPRIETARY TO DJG, INC. AND IS FURNISHED IN CONFIDENCE AN AN INSTRUMENT OF SERVICE FOR THE LIMITED PURPOSE OF EVALUATION, BIDDING AND REVIEW, OR CONSTRUCTION OF A SPECIFIC PROJECT. REPRODUCTION OF THIS DOCUMENT, IN WHOLE OR IN PART, OR THE MODIFICATION OF ANY DETAIL OR DESIGN WITHOUT THE EXPRESSED, WRITTEN CONSENT OF DJG, INC. IS PROHIBITED. ALL RIGHTS RESERVED. COPYRIGHT (C) 2006.

REVISIONS

NO.	DATE	DESCRIPTION

SUPPLY PIPING PLAN & SUPPLY RISER DIAGRAM

VIRGINIA DEPARTMENT OF TRANSPORTATION

NEW KENT SAFETY REST AREA AND INFORMATION CENTER

NEW KENT COUNTY, VIRGINIA

SCALE AS NOTED
DESIGNED BHA
DRAWN BHA
CHECKED KPH
DATE 8/3/06

COMMISSION NUMBER 2070030

SHEET NUMBER P2

P:\2070030\Plumbing\2070030P2.dwg, Layout1, 8/3/2006 2:45:32 PM

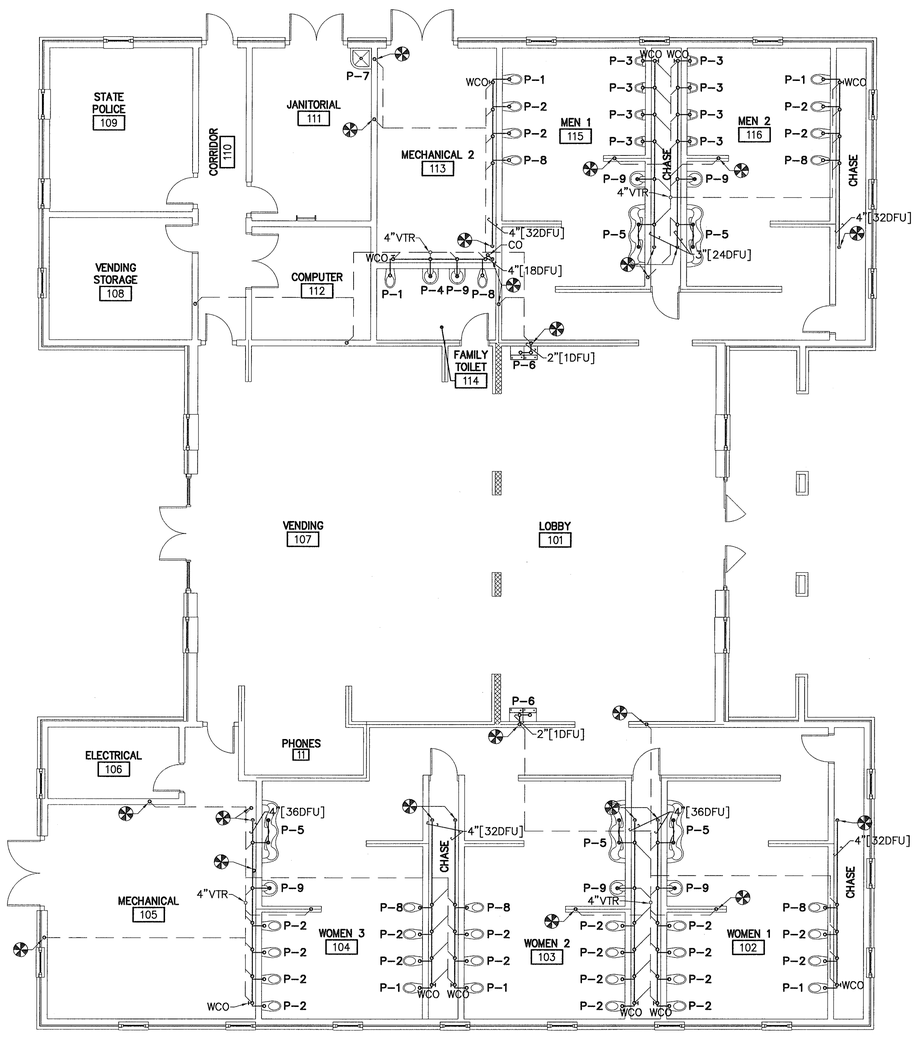

PROJECT NORTH

TRUE NORTH

SANITARY PIPING - ABOVE FLOOR SLAB

SCALE: 1/8" = 1'-0"

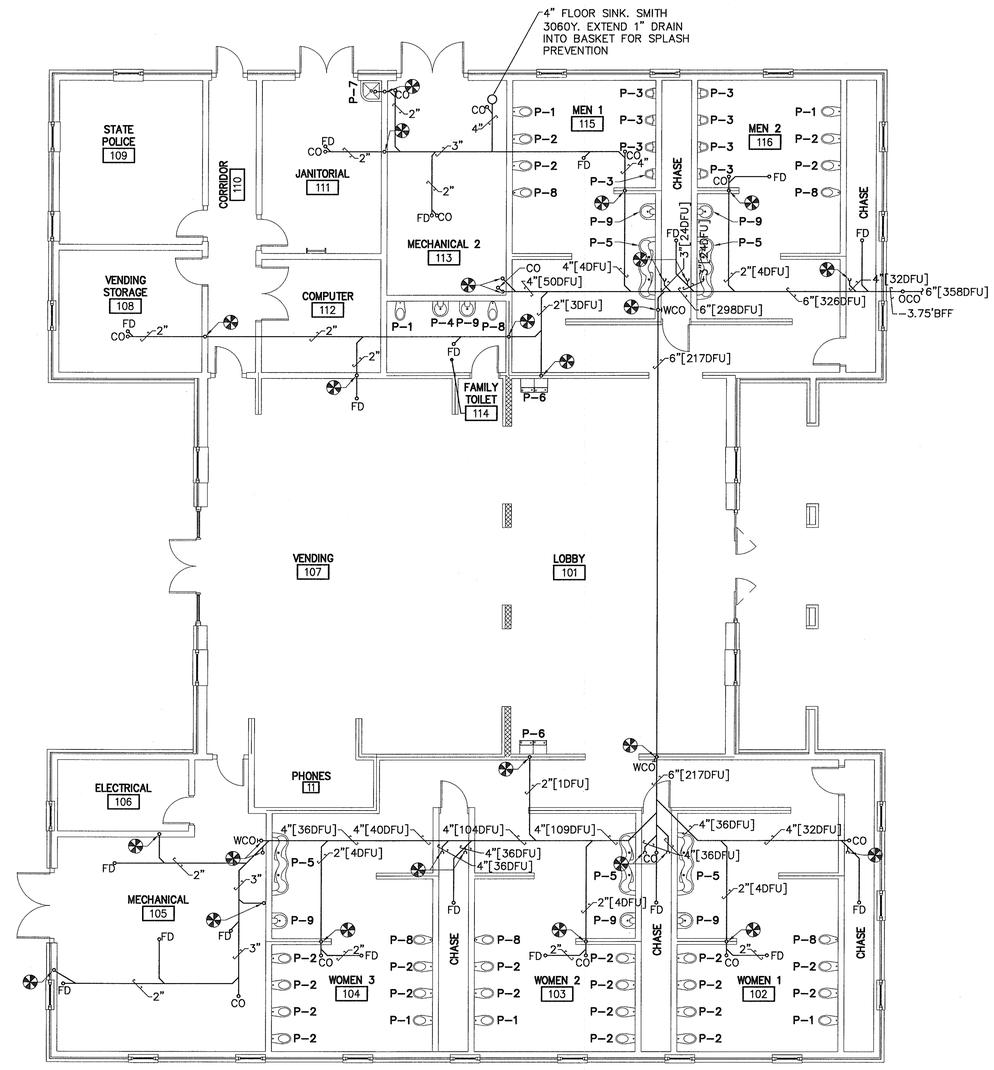

PROJECT NORTH

TRUE NORTH

SANITARY PIPING - BELOW FLOOR SLAB

SCALE: 1/8" = 1'-0"

GRAPHIC SCALE

0 4 8 12 16 20 24

SCALE: 1/8" = 1'-0"

ENGINEERS • ARCHITECTS • PLANNERS

DJG INC.

449 McLaws Circle, Williamsburg, VA 23185
Phone: 757.253.0673 Fax: 757.253.2319
Norfolk-Virginia Beach: 757.874.5015
www.djginc.com

COMMITTED TO EXCELLENCE

COMMONWEALTH OF VIRGINIA
KERRY PATRICK HERR
No. 041884
8-3-06
PROFESSIONAL ENGINEER

THIS DOCUMENT CONTAINS INFORMATION PROPRIETARY TO DJG, INC. AND IS FURNISHED IN CONFIDENCE AN AN INSTRUMENT OF SERVICE FOR THE LIMITED PURPOSE OF EVALUATION, BIDDING AND REVIEW, OR CONSTRUCTION OF A SPECIFIC PROJECT. REPRODUCTION OF THIS DOCUMENT, IN WHOLE OR IN PART, OR THE MODIFICATION OF ANY DETAIL OR DESIGN WITHOUT THE EXPRESSED, WRITTEN CONSENT OF DJG, INC. IS PROHIBITED. ALL RIGHTS RESERVED. COPYRIGHT (C) 2006.

REVISIONS

NO.	DATE	DESCRIPTION

SANITARY PIPING FLOOR PLANS

VIRGINIA DEPARTMENT OF TRANSPORTATION

NEW KENT SAFETY REST AREA AND INFORMATION CENTER

NEW KENT COUNTY, VIRGINIA

SCALE	DESIGNED	DRAWN	CHECKED	DATE
AS NOTED	BHA	BHA	KPH	8/3/06

COMMISSION NUMBER
2070030

SHEET NUMBER
P3

48 OF 63

P:\2070030\Plumbing\2070030P3.dwg, P3, 8/3/2006 2:46:31 PM

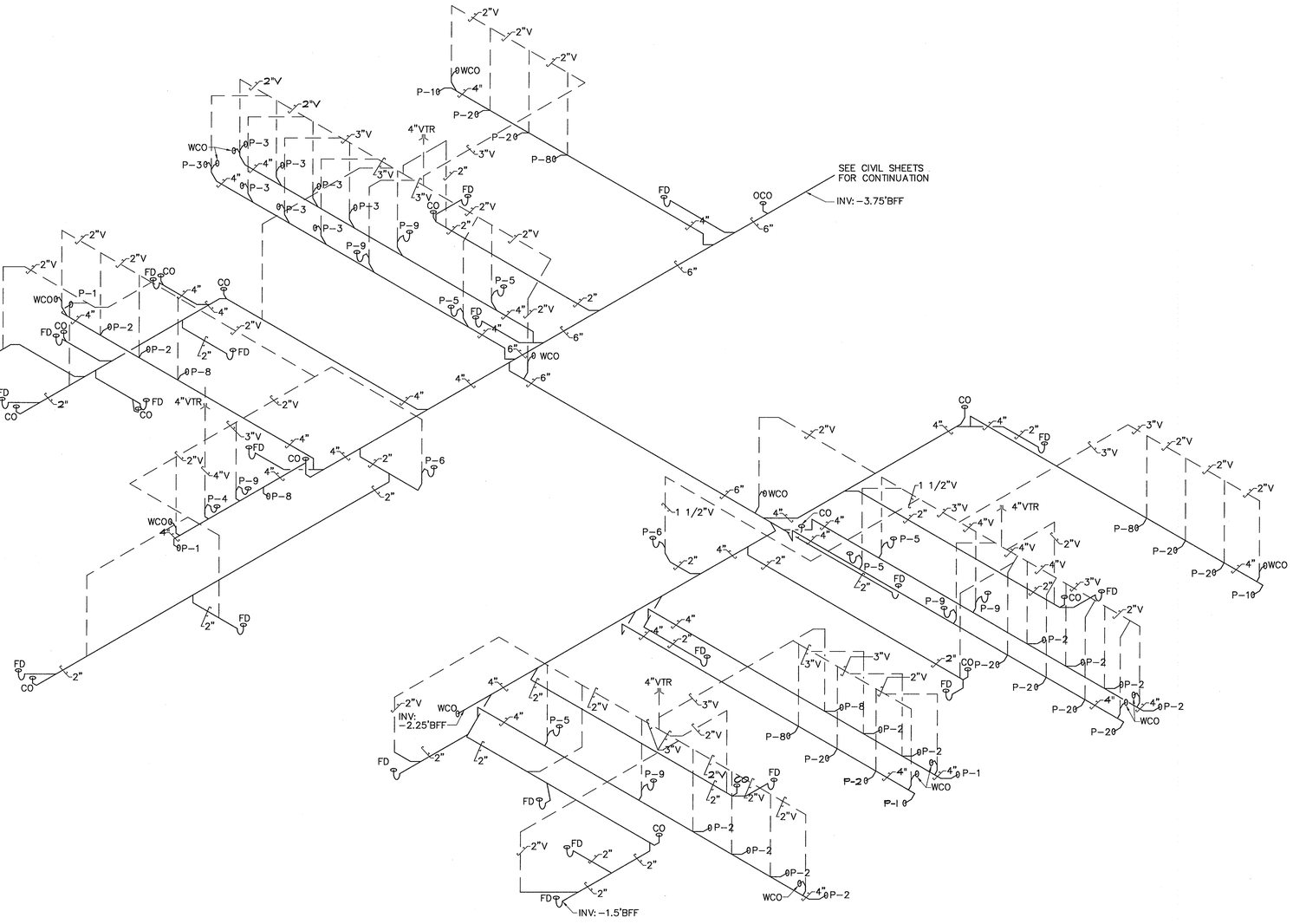

SANITARY PIPING ISOMETRIC DIAGRAM

SCALE: NONE

PLUMBING FIXTURE SCHEDULE

MARK	FIXTURE	MFR	MODEL #	MATERIAL	SIZE	MNTG./RIM HT.	FITTINGS/FAUCET/DRAIN	CWS	HWS	WASTE	VENT	FIXTURE NOTE
P1	FLUSH VALVE TOILET (ADA)	KOHLER	K-4329	VITREOUS CHINA	N/A	WALL / 17"	SLOAN: 152-1.6 ES-S	1	–	2 1/4	2	SEAT: KOHLER K-4670-C / SLOAN OPTION: EL-154 TRANSFORMER
P2	FLUSH VALVE TOILET	KOHLER	K-4329	VITREOUS CHINA	N/A	WALL / 15"	SLOAN: 152-1.6 ES-S	1	–	2 1/4	2	SEAT: KOHLER K-4670-C / SLOAN OPTION: EL-154 TRANSFORMER
P3	URINAL	KOHLER	K-5016-ER	VITREOUS CHINA	N/A	RIM 24";ADA 16"	SLOAN: 195-1.0 ES-S	3/4	–	2	1 1/2	HANGER: KOHLER 64512 / SLOAN OPTION: EL-154 TRANSFORMER
P4	SINGLE LAVATORY	BRADLEY	SS-1N/TT	POLYESTER RESIN	21"x21"	34" RIM HT.	INTEGRATED INTO FIXTURE	1/2	1/2	1 1/2	1 1/2	OPTIONS: TANKLESS WATER HEATER, SENSOR OPERATED SOAP DISP.
P5	GANG LAVATORY	BRADLEY	SS-3N/TT	POLYESTER RESIN	68"x19"	34" RIM HT.	INTEGRATED INTO FIXTURE	1/2	1/2	1 1/2	1 1/2	OPTIONS: TANKLESS WATER HEATER, LIQUID SOAP DISP. (MG-3)
P6	BI-LEVEL EWC	HAWS	HWBFA8L	VITREOUS CHINA	35"x18"	36"/43"	N/A	3/8	–	1 1/4	–	N/A
P7	FLOOR MOP SINK	FIAT	TSB-100	TERAZZO	24"x24"x12"	FLOOR	FITTING: AM.STD. 8344.112.002	1/2	1/2	3	1 1/2	DRAIN: INCLUDED
P8	TODDLER FLUSH VALVE TOILET	KOHLER	K-4321	VITREOUS CHINA	N/A	FLOOR / 12"	SLOAN: 111 ES-S	1	–	3	2	SEAT: KOHLER K-4686-A / SLOAN OPTION: EL-154 TRANSFORMER
P9	TODDLER SINGLE LAVATORY	BRADLEY	SS-1N/TT	POLYESTER RESIN	21"x21"	30" RIM HT.	INTEGRATED INTO FIXTURE	1/2	1/2	1 1/2	1 1/2	OPTIONS: TANKLESS WATER HEATER, SENSOR OPERATED SOAP DISP.

NOTES:
CO: "SMITH" MODEL 4051, NICKEL BRONZE
WCO: "SMITH" MODEL 4530, STAINLESS STEEL COVER PLATE
OCO: "SMITH" MODEL 4261, CAST IRON. SET IN 12"x12"x4" CONCRETE PAD.
FD: "SMITH" MODEL 2005YA, NICKEL BRONZE. ALL FLOOR DRAIN TRAPS SHALL BE DEEP SEAL TYPE, TYP.
WH: WALL HYDRANT, WOODFORD MODEL 65; MOUNT 24" AFF
HB: HOSE BIBB, WOODFORD MODEL HCB67; MOUNT 24" AFF. BACKFLOW PROTECTED HOT AND COLD MIXER, AUTOMATIC DRAINING, IN A BOX WITH A DOOR

GENERAL NOTE: ALL FIXTURES MAY BE PROVIDED ON AN OWNER/ARCHITECT APPROVED EQUAL BASIS. ALTERNATE MANUFACTURER'S PRODUCT SHALL MEET THE SAME SPECIFICATIONS, TYPICAL. MANUFACTURERS PRODUCTS LISTED ARE TO BE USED AS A BASIS FOR DESIGN AND TO SET THE LEVEL OF QUALITY AND PERFORMACE REQUIRED.

INSTANTANEOUS WATER HEATER SELECTION:
IH: "BOSCH" POWER STAR; MODEL AE125, 2.7gpm @ 50°F RISE, 208V, 20KW, 101A, SINGLE PHASE

ENGINEERS • ARCHITECTS • PLANNERS
DJG INC.
449 McLaws Circle, Williamsburg, VA 23185
Phone: 757.253.0673 Fax: 757.253.2319
Norfolk-Virginia Beach: 757.874.5015
www.djginc.com
COMMITTED TO EXCELLENCE

COMMONWEALTH OF VIRGINIA
KERRY PATRICK HERR
No. 041864
8-3-06
PROFESSIONAL ENGINEER

THIS DOCUMENT CONTAINS INFORMATION PROPRIETARY TO DJG, INC. AND IS FURNISHED IN CONFIDENCE AS AN INSTRUMENT OF SERVICE FOR THE LIMITED PURPOSE OF EVALUATION, BIDDING OR CONSTRUCTION. IT MAY NOT BE REPRODUCED, DISTRIBUTED OR DISCLOSED IN WHOLE OR IN PART, OR THE MODIFICATION OF ANY DETAIL OR DESIGN WITHOUT THE EXPRESSED, WRITTEN CONSENT OF DJG, INC. IS PROHIBITED. ALL RIGHTS RESERVED. COPYRIGHT (c) 2006.

REVISIONS

#	DATE	DESCRIPTION

SANITARY ISO. DIAGRAM, FIXTURE SCHEDULE

VIRGINIA DEPARTMENT OF TRANSPORTATION
NEW KENT SAFETY REST AREA AND INFORMATION CENTER
NEW KENT COUNTY, VIRGINIA

SCALE: AS NOTED
DESIGNED: BHA
DRAWN: BHA
CHECKED: KPH
DATE: 8/3/06

COMMISSION NUMBER
2070030

SHEET NUMBER
P4

P:\2070030\Plumbing\2070030P4.dwg, P4, 8/3/2006 3:20:44 PM

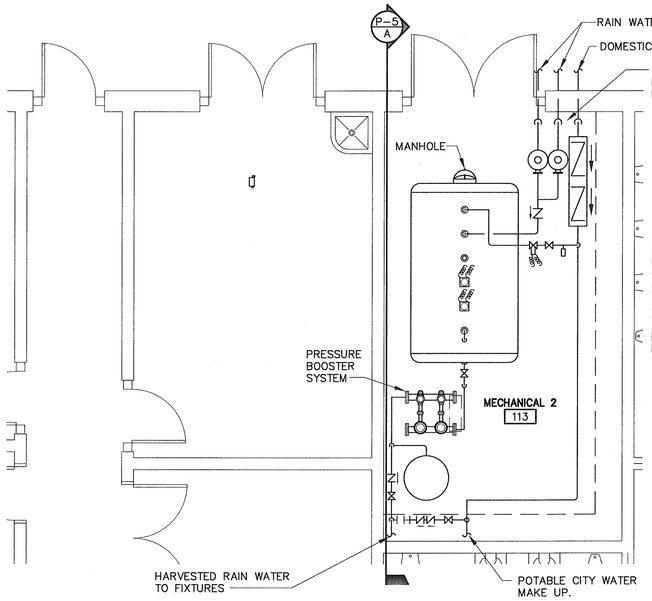

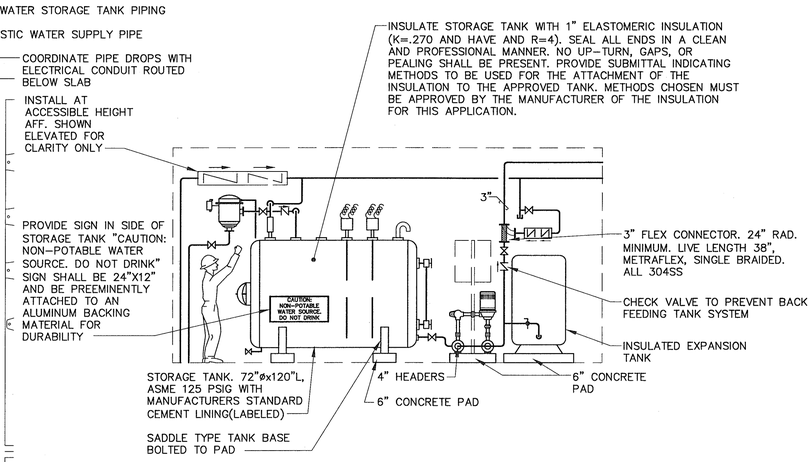

SECTION - A

SCALE: 1/4" = 1'-0"

NOTES:
* REFER TO DRAWING M5 FOR ADDITIONAL CONTROL DETAILS. COORDINATE INSTALLATION AND INSULATION OF DEVICES WITH THE REQUIREMENTS OF M5
* USE PRETENSIONED PIPE MARKERS ON ALL PIPING SYSTEMS. PRETENSIONED MARKERS SHALL INDICATED FLOW DIRECTION AND SYSTEM. SUBMIT TO ENGINEER FOR APPROVAL THE INTENDED PIPE MARKERS, COLOR AND SYSTEM LABEL DESIGNATIONS.

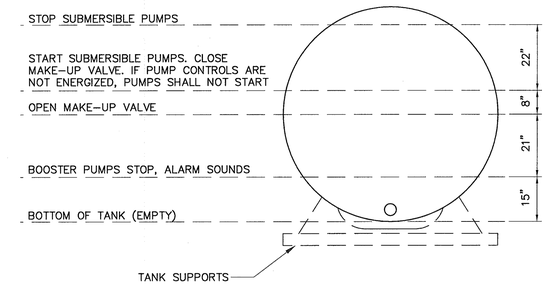

PUMP OPERATION CONTROL LEVELS

SCALE: 1/2" = 1'-0"

PROVIDE CONTROLS FOR TANK LEVEL AND PUMP ACTUATION TO MAINTAIN 50PSI (MINIMUM) IN THE RAINWATER WATER PIPING SYSTEM TO THE BUILDING'S FIXTURES

ENLARGED MECHANICAL 2 ROOM PLAN

SCALE: 1/4" = 1'-0"

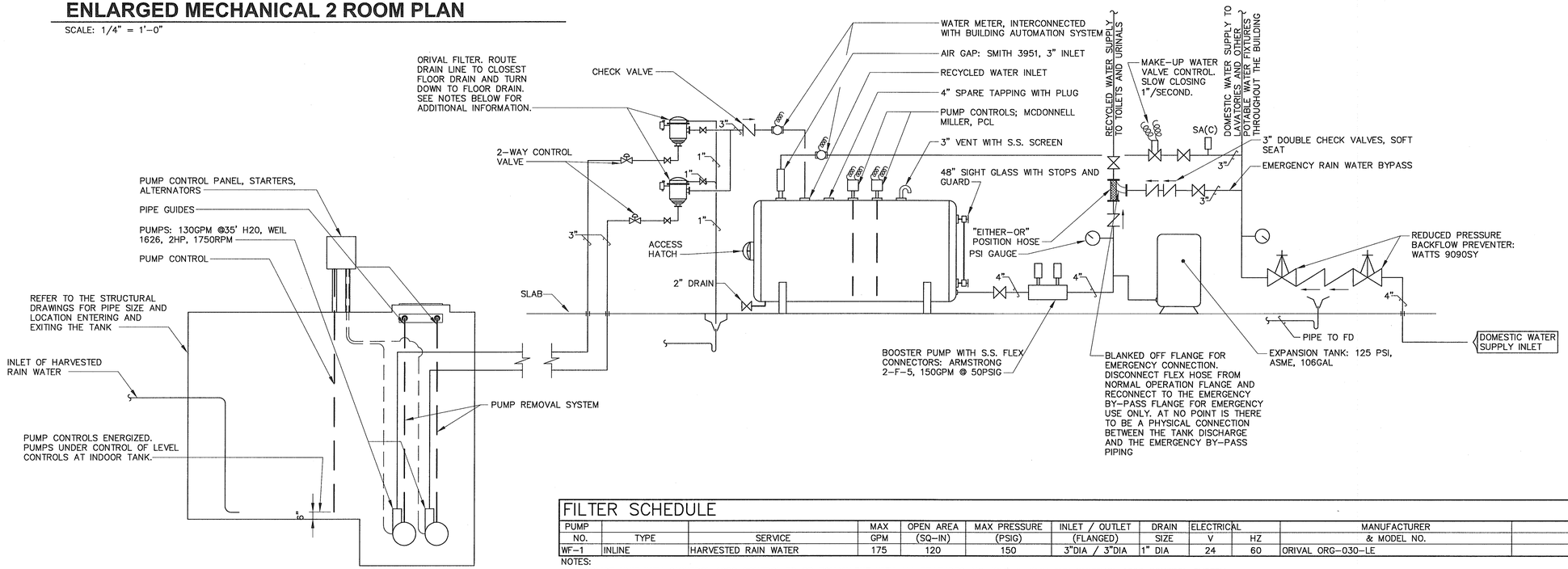

FILTER SCHEDULE

PUMP NO.	TYPE	SERVICE	MAX GPM	OPEN AREA (SQ-IN)	MAX PRESSURE (PSIG)	INLET / OUTLET (FLANGED)	DRAIN SIZE	ELECTRICAL V	ELECTRICAL HZ	MANUFACTURER & MODEL NO.	REMARKS
WF-1	INLINE	HARVESTED RAIN WATER	175	120	150	3"DIA / 3"DIA	1" DIA	24	60	ORIVAL ORG-030-LE	

NOTES:
- PROVIDE UNIT WITH OMNITROL 1000 CONTROLLER OR EQUIVALENT WITH ALL FEATURES INCLUDED IN WITH THE OMNITROL 1000 CONTROL SYSTEM
- PROVIDE UNIT WITH 1" RINSE VALVE, DIGITAL CONTROLLER, 24 V SOLENOID VALVE, DIFFERENTIAL PRESSURE SWITCH AND ASSOCIATED BALL VALVES FOR ISOLATION OF FILTER

RAIN WATER HARVEST FLOW DIAGRAM

SCALE: NONE

NOTES:
* REFER TO DRAWING M5 FOR ADDITIONAL CONTROL DETAILS. COORDINATE INSTALLATION AND INSULATION OF DEVICES WITH THE REQUIREMENTS OF M5
* USE PRETENSIONED PIPE MARKERS ON ALL PIPING SYSTEMS. PRETENSIONED MARKERS SHALL INDICATED FLOW DIRECTION AND SYSTEM. SUBMIT TO ENGINEER FOR APPROVAL THE INTENDED PIPE MARKERS, COLOR AND SYSTEM LABEL DESIGNATIONS.

GRAPHIC SCALE

0 2 4 6 8 10 12

SCALE: 1/4" = 1'-0"

0 1 2 3 4 5 6

SCALE: 1/2" = 1'-0"

ENGINEERS • ARCHITECTS • PLANNERS
449 McLaws Circle, Williamsburg, VA 23185
Phone: 757.253.0673 Fax: 757.253.2319
Norfolk-Virginia Beach: 757.874.5015
www.dlginc.com
DLG INC.
COMMITTED TO EXCELLENCE

COMMONWEALTH OF VIRGINIA
KERRY PATRICK HERR
No. 041694
8-3-06
PROFESSIONAL ENGINEER

THIS DOCUMENT CONTAINS INFORMATION PROPRIETARY TO DLG, INC. AND IS FURNISHED IN CONFIDENCE. IT IS TO BE USED ONLY FOR THE PURPOSE FOR WHICH IT WAS PREPARED AND IS NOT TO BE REPRODUCED, CIRCULATED, QUOTED OR DISCLOSED TO OTHERS WITHOUT WRITTEN AUTHORIZATION. NO RIGHTS ARE CONVEYED TO REPRODUCE OR USE THE INFORMATION CONTAINED HEREIN IN WHOLE OR IN PART OR TO ANY OTHER PERSON OR ORGANIZATION FOR ANY PURPOSE WHATSOEVER WITHOUT THE EXPRESSED WRITTEN CONSENT OF DLG, INC. AND THE ARCHITECT OF RECORD.

REVISIONS

NO.	DATE	DESCRIPTION

RAIN WATER HARVEST SYSTEM LAYOUT & DETAILS

VIRGINIA DEPARTMENT OF TRANSPORTATION
NEW KENT SAFETY REST AREA AND INFORMATION CENTER
NEW KENT COUNTY, VIRGINIA

SCALE	DESIGNED	DRAWN	CHECKED	DATE
AS NOTED	BHA	BHA	KPH	8/3/06

COMMISSION NUMBER
2070030

SHEET NUMBER
P5

P:\2070030\Plumbing\2070030P5.dwg, P5, 8/3/2006 2:47:27 PM

GENERAL MECHANICAL NOTES:

PROVIDE ALL MATERIALS AND EQUIPMENT AND PERFORM ALL LABOR REQUIRED TO INSTALL COMPLETE AND OPERABLE MECHANICAL SYSTEMS AS INDICATED ON THE DRAWINGS, AS SPECIFIED AND AS REQUIRED BY STATE CODES.

CONTRACT DOCUMENT DRAWINGS FOR MECHANICAL WORK (HVAC, PLUMBING, AND FIRE PROTECTION) ARE DIAGRAMMATIC AND ARE INTENDED TO CONVEY SCOPE AND GENERAL ARRANGEMENT ONLY (DO NOT SCALE).

INSTALL ALL MECHANICAL EQUIPMENT AND APPURTENANCES IN ACCORDANCE WITH MANUFACTURERS' RECOMMENDATIONS, CONTRACT DOCUMENTS, AND APPLICABLE CODES AND REGULATIONS.

PROVIDE VIBRATION ISOLATION (TYPE, AS RECOMMENDED BY THE EQUIPMENT MANUFACTURER) FOR ALL MECHANICAL EQUIPMENT TO PREVENT TRANSMISSION OF VIBRATION TO BUILDING STRUCTURE.

PROVIDE VIBRATION ISOLATORS FOR ALL PIPING SUPPORTS CONNECTED TO AND WITHIN 50 FEET OF ISOLATED EQUIPMENT (EXCEPT AT BASE ELBOW SUPPORTS AND ANCHOR POINTS) THROUGHOUT MECHANICAL EQUIPMENT ROOMS.

IF SHOWN, THE LOCATION OF EXISTING UNDERGROUND UTILITIES IS SHOWN IN AN APPROXIMATE LOCATION. THE CONTRACTOR SHALL DETERMINE THE EXACT LOCATION OF ALL EXISTING UTILITIES BEFORE COMMENCING WORK.

COORDINATE CONSTRUCTION OF ALL MECHANICAL WORK WITH ARCHITECTURAL, STRUCTURAL, CIVIL, ELECTRICAL WORK, ETC., SHOWN ON OTHER CONTRACT DOCUMENT DRAWINGS.

MAINTAIN A MINIMUM OF 6' – 8" CLEARANCE TO UNDERSIDE OF PIPES, DUCTS, CONDUITS, SUSPENDED EQUIPMENT, ETC., THROUGHOUT ACCESS ROUTES IN MECHANICAL ROOMS.

ALL SYSTEM RELATED TESTS SHALL BE COMPLETED BEFORE ANY MECHANICAL EQUIPMENT OR PIPING INSULATION IS APPLIED.

LOCATE ALL TEMPERATURE, PRESSURE, AND FLOW MEASURING DEVICES IN ACCESSIBLE LOCATIONS WITH STRAIGHT SECTION OF PIPE OR DUCT UP AND DOWNSTREAM, AS RECOMMENDED BY THE DEVICE MANUFACTURER FOR PUBLISHED ACCURACY.

TESTING, ADJUSTING, AND BALANCING AGENCY SHALL BE A MEMBER OF THE ASSOCIATED AIR BALANCE COUNCIL (AABC) OR THE NATIONAL ENVIRONMENTAL BALANCING BUREAU (NEBB). TESTING, ADJUSTING, AND BALANCING SHALL BE PERFORMED IN ACCORDANCE WITH THE AABC STANDARDS.

WHERE TWO MORE ITEMS OF THE SAME TYPE OF EQUIPMENT ARE REQUIRED, THE PRODUCT OF ONE MANUFACTURER SHALL BE USED.

REINFORCEMENT, DETAILING, AND PLACEMENT OF CONCRETE SHALL CONFORM TO ASTM 315 AND ACI 318. CONCRETE SHALL CONFORM TO ASTM C94. CONCRETE WORK SHALL CONFORM TO ACI 318; PART ENTITLED "CONSTRUCTION REQUIREMENTS." COMPRESSIVE STRENGTH IN 28 DAYS SHALL BE 3,000 PSI. TOTAL AIR CONTENT OF EXTERIOR CONCRETE SHALL BE BETWEEN 5 AND 7 PERCENT BY VOLUME. SLUMP SHALL BE BETWEEN 3 AND 4 INCHES. CONCRETE SHALL BE CURED FOR 7 DAYS AFTER PLACEMENT.

COORDINATE ALL EQUIPMENT CONNECTIONS WITH MANUFACTURERS' CERTIFIED DRAWINGS. COORDINATE AND PROVIDE ALL DUCT AND PIPING TRANSITIONS REQUIRED FOR FINAL EQUIPMENT CONNECTIONS TO FURNISHED EQUIPMENT. FIELD VERIFY AND COORDINATE ALL DUCT AND PIPING DIMENSIONS BEFORE FABRICATION.

ALL CONTROL WIRE AND CONDUIT SHALL COMPLY WITH THE NATIONAL ELECTRIC CODE AND DIVISION 16 OF THE SPECIFICATIONS.

CONCRETE HOUSEKEEPING PADS TO SUIT MECHANICAL EQUIPMENT SHALL BE SIZED AND LOCATED BY THE MECHANICAL CONTRACTOR. MINIMUM CONCRETE PAD THICKNESS SHALL BE 6 INCHES. PAD SHALL EXTEND BEYOND THE EQUIPMENT A MINIMUM OF 6 INCHES ON EACH SIDE. IT SHALL BE THE RESPONSIBILITY OF THE MECHANICAL CONTRACTOR TO COORDINATE SIZE AND LOCATION OF CONCRETE HOUSEKEEPING PADS WITH GENERAL CONTRACTOR OR INSTALLING CONTRACTOR OF PAD.

GENERAL MECHANICAL NOTES (CON'T):

THE LOCATIONS OF ALL ITEMS SHOWN ON THE DRAWINGS OR CALLED FOR IN THE SPECIFICATIONS THAT ARE NOT DEFINITELY FIXED BY DIMENSIONS ARE APPROXIMATE ONLY. THE EXACT LOCATIONS NECESSARY TO SECURE THE BEST CONDITIONS AND RESULTS MUST BE DETERMINED BY THE PROJECT SITE CONDITIONS AND SHALL HAVE THE APPROVAL OF THE ENGINEER BEFORE BEING INSTALLED. DO NOT SCALE DRAWINGS.

ALL MISCELLANEOUS STEEL REQUIRED TO ENSURE PROPER INSTALLATION AND AS SHOWN IN DETAILS FOR PIPING, DUCTWORK, AND EQUIPMENT (UNLESS OTHERWISE NOTED) SHALL BE FURNISHED AND INSTALLED BY THE MECHANICAL CONTRACTOR.

PROVIDE ACCESS PANELS FOR INSTALLATION IN WALLS AND CEILINGS, WHERE REQUIRED, TO SERVICE DAMPERS, VALVES, SMOKE DETECTORS, AND OTHER CONCEALED MECHANICAL EQUIPMENT, EVEN IF THE ACCESS DOORS ARE NOT SHOWN ON THE PLANS.

ALL EQUIPMENT, PIPING, DUCTWORK, ETC., SHALL BE SUPPORTED AS DETAILED, SPECIFIED, AND REQUIRED TO PROVIDE A VIBRATION FREE INSTALLATION.

LOCATIONS AND SIZES OF ALL FLOOR, WALL, AND ROOF OPENINGS SHALL BE COORDINATED WITH ALL OTHER TRADES INVOLVED. FLASH OPENINGS TO BE LEAK FREE.

ALL OPENINGS IN WALLS DUE TO DUCTWORK, PIPING, CONDUIT, ETC., SHALL BE FIRE STOPPED WITH A PRODUCT SIMILAR TO 3M FIRE STOP OR APPROVED EQUAL.

GENERAL MECHANICAL NOTES (CON'T):

ALL AIR CONDITIONING CONDENSATE DRAIN LINES FROM EACH AIR HANDLING UNIT UNIT SHALL BE PIPED FULL SIZE OF THE UNIT DRAIN OUTLET, WITH "P" TRAP, AND PIPED TO NEAREST DRAIN. SEE DETAILS SHOWN ON THE DRAWINGS OR THE CONTRACT SPECIFICATIONS FOR DEPTH OF AIR CONDITIONING CONDENSATE TRAP. DO NOT CUT FLOOR OR SLAB TO INSTALL THE REQUIRED TRAPS. THE UNIT'S BASE OR CONCRETE PAD HEIGHT SHALL BE COORDINATED WITH THE REQUIRED TRAP DEPTH AND ADJUSTED TO SUIT, PRIOR TO POURING OF CURB.

PIPING GENERAL NOTES:

ANY ELEVATIONS AS SHOWN ON THE DRAWINGS ARE TO THE CENTERLINE OF ALL PRESSURE PIPING AND TO THE INVERT OF ALL GRAVITY PIPING, UNLESS NOTED OTHERWISE.

MAINTAIN A MINIMUM OF 5'–0" OF GROUND COVER OVER ALL UNDERGROUND HVAC PIPING.

UNLESS OTHERWISE NOTED, ALL WATER PIPING SHALL BE O.D. INCH SIZE.

PROVIDE AN AIR VENT AT THE HIGH POINT OF EACH DROP IN CLOSED LOOP WATER PIPING SYSTEM. ALL PIPING SHALL SLOPE TO LOW POINTS. PROVIDE HOSE END DRAIN VALVES AT THE BOTTOM OF ALL RISERS AND LOW POINTS.

UNLESS OTHERWISE NOTED, ALL PIPING IS OVERHEAD, TIGHT TO UNDERSIDE OF STRUCTURE OR SLAB, WITH SPACE FOR INSULATION.

INSTALL PIPING SO THAT ALL VALVES, STRAINERS, UNIONS, TRAPS, FLANGES, AND OTHER APPURTENANCES REQUIRING ACCESS ARE ACCESSIBLE FROM BELOW.

ALL VALVES SHALL BE INSTALLED SO THAT VALVE REMAINS IN SERVICE WHEN EQUIPMENT OR PIPING OF EQUIPMENT SIDE OF VALVE IS REMOVED.

ALL BALANCING VALVES AND BUTTERFLY VALVES SHALL BE PROVIDED WITH POSITION INDICATORS AND MAXIMUM ADJUSTABLE STOPS (MEMORY STOPS).

ALL VALVES (EXCEPT CONTROL VALVES) AND STRAINERS SHALL BE FULL SIZE OF PIPE BEFORE REDUCING SIZE TO MAKE CONNECTIONS TO EQUIPMENT AND CONTROLS.

UNIONS AND/OR FLANGES SHALL BE INSTALLED AT EACH PIECE OF EQUIPMENT, IN BYPASSES, AND IN LONG PIPING RUNS (100 FEET OR MORE) TO PERMIT DISASSEMBLY FOR ALTERATION AND REPAIRS.

INSTALL ALL PIPING WITHOUT FORCING OR SPRINGING.

TAP ALL BRANCH LINES FROM TOP OF PIPING MAINS (45 DEGREES PREFERRED, 90 DEGREES ACCEPTABLE).

ALL VALVES SHALL BE ADJUSTED FOR SMOOTH AND EASY OPERATION.

ALL PIPING WORK SHALL BE COORDINATED WITH ALL TRADES INVOLVED. OFFSETS IN PIPING AROUND OBSTRUCTIONS SHALL BE PROVIDED AT NO ADDITIONAL COST TO THE OWNER.

PROVIDE STAINLESS STEEL FLEXIBLE CONNECTIONS IN ALL PIPING SYSTEMS CONNECTED TO PUMPS, CHILLERS, COOLING TOWERS, AND OTHER EQUIPMENT WHICH REQUIRE VIBRATION ISOLATION EXCEPT WATER COILS. FLEXIBLE CONNECTIONS SHALL BE PROVIDED AS CLOSE TO THE EQUIPMENT AS POSSIBLE AND/OR AS INDICATED ON THE DRAWINGS

CERTAIN ITEMS SUCH AS RISES AND DROPS IN DUCTWORK, ACCESS DOORS, VOLUME DAMPERS, ETC., ARE INDICATED ON THE CONTRACT DOCUMENT DRAWINGS WHERE POSSIBLE. FOR CLARITY AND DESIGN LIMITATIONS, FOR A SPECIFIC LOCATION(S), THE REQUIREMENTS SHOWN SHALL NOT BE INTERPRETED AS THE EXTENT OF THE REQUIREMENTS FOR THESE ITEMS. PROVIDE ALL ITEMS REQUIRED TO MEET THE INTENT OF ALL THE CONTRACT DOCUMENTS.

COORDINATE LOCATIONS OF ALL AIR DEVICES WITH CEILING MOUNTED EQUIPMENT. MAINTAIN MINIMUM OF 3'–0" FROM CEILING MOUNTED SMOKE DETECTORS.

UNLESS OTHERWISE SHOWN, LOCATE ALL THE ROOM THERMOSTATS AND HUMIDISTATS 4'–0" (CENTERLINE) ABOVE FINISHED FLOOR (COORDINATE WITH ELECTRICAL SWITCH HEIGHT). NOTIFY THE ENGINEER OF ANY ROOMS WHERE THE ABOVE LOCATION CANNOT BE MAINTAINED OR WHERE THERE IS A QUESTION ON LOCATION.

ALL DUCTWORK SHALL BE INSTALLED ABOVE CEILINGS UNLESS NOTED OTHERWISE..

HVAC GENERAL NOTES (CON'T):

ALL DUCTWORK DIMENSIONS, AS SHOWN ON THE DRAWINGS, ARE INTERNAL CLEAR DIMENSIONS AND DUCT SIZE SHALL BE INCREASED TO COMPENSATE FOR DUCT LINING THICKNESS.

PROVIDE ALL 90–DEGREE SQUARE ELBOWS WITH DOUBLE RADIUS TURNING VANES UNLESS OTHERWISE INDICATED. PROVIDE ACCESS DOORS UPSTREAM OF ALL ELBOWS WITH TURNING VANES.

COORDINATE DIFFUSER, REGISTER, AND GRILLE LOCATIONS WITH ARCHITECTURAL REFLECTED CEILING PLANS, LIGHTING, AND OTHER CEILING ITEMS AND MAKE MINOR DUCT MODIFICATIONS TO SUIT.

ALL AIR–HANDLING UNITS SHALL OPERATE WITHOUT MOISTURE CARRYOVER (CERTIFIED BY THE MANUFACTURER).
DESCRIPTIONS ARE PROVIDED IN THE ARCHITECTURAL SPECIFICATIONS.

HVAC GENERAL NOTES (CON'T):

LOCATE ALL MECHANICAL EQUIPMENT FOR UNOBSTRUCTED ACCESS TO UNIT ACCESS PANELS, CONTROLS AND VALVING.

PROVIDE FLEXIBLE CONNECTIONS IN ALL DUCTWORK SYSTEMS (SUPPLY, RETURN, AND EXHAUST) CONNECTED TO AIR HANDLING UNITS, FANS, AND OTHER EQUIPMENT WHICH REQUIRE VIBRATION ISOLATION. FLEXIBLE CONNECTIONS SHALL BE PROVIDED AT THE POINT OF CONNECTION TO THE EQUIPMENT UNLESS OTHERWISE INDICTED.

UNLESS OTHERWISE NOTED, ALL DUCTWORK IS OVERHEAD, TIGHT TO THE UNDERSIDE OF THE STRUCTURE, WITH SPACE FOR INSULATION.

RUNS OF FLEXIBLE DUCT SHALL NOT EXCEED 5 FEET.

ALL DUCTWORK SHALL BE COORDINATED WITH ALL TRADES INVOLVED. OFFSETS IN DUCTS, INCLUDING DIVIDED DUCTS AND TRANSITIONS AROUND OBSTRUCTIONS, SHALL BE PROVIDED AT NO ADDITIONAL COST TO THE OWNER.

PROVIDE ACCESS DOORS IN DUCTWORK TO PROVIDE ACCESS FOR ALL SMOKE DETECTORS, FIRE DAMPERS, SMOKE DAMPERS, VOLUME DAMPERS, HUMIDIFIERS, COILS, AND OTHER ITEMS LOCATED IN THE DUCTWORK WHICH REQUIRE SERVICE AND/OR INSPECTION.

PROVIDE ACCESS DOORS IN DUCTWORK FOR OPERATION, ADJUSTMENT, AND MAINTENANCE OF ALL FANS, VALVES, AND MECHANICAL EQUIPMENT.

ALL DUCTS SHALL BE GROUNDED ACROSS FLEXIBLE CONNECTIONS WITH FLEXIBLE COPPER GROUNDING STRAPS. GROUNDING STRAPS SHALL BE BOLTED OR SOLDERED TO BOTH THE EQUIPMENT AND THE DUCT.

SMOKE DETECTORS SHALL BE FURNISHED AND WIRED BY THE ELECTRICAL CONTRACTOR. THE MECHANICAL CONTRACTOR SHALL BE RESPONSIBLE FOR MOUNTING THE SMOKE DETECTOR IN DUCTWORK AS SHOWN ON THE DRAWINGS AND IN ACCORDANCE WITH MANUFACTURER'S PRINTED INSTRUCTIONS.

SEE SPECIFICATIONS FOR DUCTWORK GAUGES, BRACING, HANGERS, AND OTHER REQUIREMENTS.

EXTERIOR LOUVERS ARE INDICATED FOR INFORMATION ONLY. DETAILED DESCRIPTIONS ARE PROVIDED IN THE ARCHITECTURAL SPECIFICATIONS.

ABBREVIATIONS

ABV.CLG.	ABOVE CEILING
AC	AIR COMPRESSOR
AD	ACCESS DOOR (12X12 MIN)
AFF	ABOVE FINISHED FLOOR
AFG	ABOVE FINISHED GRADE
AHU	AIR HANDLING UNIT
AI /AO	ANALOG INPUT / OUTPUT
AS	AIR SEPARATOR
BDD	BACKDRAFT DAMPER
BFP	BACKFLOW PREVENTER
BTUH	BRITISH THERMAL UNITS PER HOUR
BO / BI	BINARY OUTPUT / INPUT
CCC–1	CLOSED CIRCUIT COOLER
CFM	CUBIC FEET PER MINUTE
CONT	CONTINUATION
CP	CONDENSATE PUMP
CU	CONDENSING UNIT
CUH–1	CABINET UNIT HEATER
DF	DRINKING FOUNTAIN
DHU	DEHUMIDIFIER UNIT
DL	DOOR LOUVER
DN	DOWN
DTC	DATA TERMINAL CABINET
EAT	ENTERING AIR TEMPERATURE
EDH	ELECTRIC DUCT HEATER
EF	EXHAUST FAN
ESP	EXTERNAL STATIC PRESSURE
ET	EXPANSION TANK
EWC	ELECTRIC WATER COOLER
EWT	ENTERING WATER TEMPERATURE
EF–1	EXHAUST FAN AND NO.
ERU–1	ENERGY RECOVER UNIT
F	FAHRENHEIT
FOR	FUEL OIL RETURN
FOS	FUEL OIL SUPPLY
FOV	FUEL OIL VENT
FOG	FUEL OIL GAGE
FT	FOOT/FEET
FTR	FINNED TUBE RADIATOR
F.W.	FIRE WALL
GAL	GALLONS
GPH	GALLON PER HOUR
GPM	GALLON PER MINUTE
GSHP	GROUND SOPURCE HEAT PUMP
HP	HORSEPOWER
HP–1	HEAT PUMP
HW	POTABLE HOT WATER
HX	HEAT EXCHANGER
HZ	HERTZ
IL	INTAKE LOUVER
KEC	KITCHEN EQUIPMENT CONTRACTOR

L	LAVATORY
LWT	LEAVING WATER TEMPERATURE
LAT	LEAVING AIR TEMPERATURE
MAV	MANUAL AIR VENT
MBH	ONE MILLION BTUH
M.H.	MAN HOLE
MOD.	MODULATING
MVD	MANUAL VOLUME DAMPER W/ LOCKING QUADRANT
N.C.	NORMALLY CLOSED
NIC	NOT INCLUDED IN CONTRACT
NOM	NOMINAL
OA	OUTSIDE AIR
OD	OUTSIDE DIAMETER
O.F.C.I.	OWNER FURNISHED, CONTRACTOR INSTALLED
OR	OVERRIDE TIMER
OSD	OPEN SITE DRAIN
P–1	PUMP
PPH	POUNDS PER HOUR
PSIG	POUNDS PER SQUARE INCH GAGE
PTAC	PACKAGED TERMINAL AIR CONDITIONER
PTHP	PACKAGED TERMINAL HEAT PUMP
RA	RETURN AIR
RD	ROOF DRAIN
RL	RAIN LEADER
RL	REFRIGERANT LIQUID
RS	REFRIGERANT SUCTION
SA	SUPPLY AIR
SC	STEAM CONVERTER
S.D.	SMOKE DETECTOR
SD	SPLITTER DAMPER
SM	STEAM METER
SP	STATIC PRESSURE
SS	STORM SEWER
SW	SWITCH
TABU	TERMINAL AIR BLENDER UNIT
TC	TIME CLOCK
TYP	TYPICAL
UH–1	UNIT HEATER
UON	UNLESS OTHERWISE NOTED
UR	URINAL
UV–1	UNIT VENTILATOR
V.B.	VACUUM BREAKER
VSD / VFD	VARIABLE SPEED DRIVE / VARIABLE FREQUENCEY DRIVE
VTR	VENT THRU ROOF
WC	WATER COOLER
W.G.	WATER GAGE
W.H.	WATER HEATER
W/	WITH
WPD	WATER PRESSURE DROP

PIPING SYSTEMS

ITEMS TO BE PROVIDED, NEW WORK (SOLID)
GTS — GEOTHERMAL WATER SUPPLY
GTR — GEOTHERMAL WATER RETURN
D — CONDENSATE DRAIN PIPING
TEMPERATURE AND/OR PRESSURE GAUGE

FITTINGS

CAP
DROP / RISE IN PIPING
ELBOW, TURNED DOWN
ELBOW, TURNED UP
TEE, OUTLET UP
TEE, OUTLET DOWN
UNION, SCREWED
UNION, FLANGED
VALVE IN RISER

DUCTWORK

12x20 — DUCT SIZE, FIRST FIGURE IS SIDE SHOWN
12x20 — DUCT SECTION, POSITIVE PRESSURE, (SUPPLY) FIRST FIGURE IS TOP
20x12 — DUCT SECTION, NEGATIVE PRESSURE. (RETURN, EXHUST)
DUCT WITH ACOUSTICAL LINING (INSULATION)
FLEXIBLE CONNECTION
DUCT WITH FLEXIBLE CONNECTION
FLEXIBLE DUCTWORK – 5FT MAX LENGTH
DUCT WITH BALANCING DAMPER
ELBOW WITH TURNING VANES.
DUCT WITH ROUND ELBOW AND TURNING VANES
DUCT W/TRANSITION
S / R — STANDARD 45 deg BOOT BRANCH, SUPPLY OR RETURN, NO SPLITTER
CEILING SUPPLY DIFFUSER, REGISTER; ARROWS INDICATE THROW
CEILING RETURN/EXHAUST REGISTER, GRILLE. WITH FLOW ARROWS (4–WAY IF NO ARROWS INDICATED)
MANUAL VOLUME DAMPER
M — MOTOR OPERATED DAMPER W/ ACCESS DOOR
S1A / 100 — AIR DEVICE TAG EX: S1A , S1 = DEVICE, A = NECK SIZE FROM SCHEDULE GRILLE NOTATION; CFM
(1) — NEW WORK PLAN REFERENCE NOTE

MISCELLANEOUS MECHANICAL SYMBOLS

AIRFLOW DIRECTION – EXHAUST
AIRFLOW DIRECTION – SUPPLY
CLEARANCE / COIL PULL OUT AREA
Ø — ROUND DIAMETER
UNIT HEATER
(C) — CO2 SENSOR
(SD) — SMOKE DETECTOR
(S)# — SENSOR WITH EQUIPMENT #

ENGINEERS • ARCHITECTS • PLANNERS
DJG INC.
449 McLaws Circle, Williamsburg, VA 23185
Phone: 757.253.0673 Fax: 757.253.2319
Norfolk-Virgina Beach: 757.874.5015
www.djginc.com
COMMITTED TO EXCELLENCE

COMMONWEALTH OF VIRGINIA
KERRY PATRICK HERR
No. 041864
8-3-06
PROFESSIONAL ENGINEER

THIS DOCUMENT CONTAINS INFORMATION PROPRIETARY TO DJG, INC. AND IS FURNISHED IN CONFIDENCE, AN AN INSTRUMENT OF SERVICE FOR THE LIMITED PURPOSE OF EVALUATION, BIDDING AND REVIEW, OR CONSTRUCTION OF A SPECIFIC PROJECT. REPRODUCTION OF THIS DOCUMENT, IN WHOLE OR IN PART, OR THE MODIFICATION OF ANY DETAIL OR DESIGN WITHOUT THE EXPRESSED, WRITTEN CONSENT OF DJG, INC. IS PROHIBITED. ALL RIGHTS RESERVED. COPYRIGHT (C) 2006.

REVISIONS

NO.	DATE	DESCRIPTION

GENERAL NOTES AND LEGEND

VIRGINIA DEPARTMENT OF TRANSPORTATION
NEW KENT SAFETY REST AREA AND INFORMATION CENTER
NEW KENT COUNTY, VIRGINIA

SCALE	DESIGNED	DRAWN	CHECKED	DATE
AS NOTED	KPH	KPH	KPH	8/3/06

COMMISSION NUMBER
2070030

SHEET NUMBER
M1

P:\2070030\Mechanical\2070030M1.dwg, M1, 8/3/2006 2:36:59 PM

AIR DEVICE SCHEDULE

NO.	TYPE	FACE SIZE	MODULE SIZE	NECK SIZE	MAX SP IN. WG	MATERIAL	MANUFACTURER & MODEL NO.	REMARKS
S1	LOUVERED CONE	24x24	24x24	A = 6" B = 8"	0.08	STEEL	TITUS / TMS	
S2	LOUVERED CONE	12x12	24x24	A = 4" B = 6"	0.08	STEEL	TITUS / TMS	PROVIDE WITH BLANKOFF PANEL
S3	LINIER	24x24	24x24	A = 60x2"	0.08	STEEL	TITUS / CT-581	PROVIDE WITH OPPOSED BLADE BALANCING DAMPERS
				A = 60x2"	0.08	STEEL	TITUS / CT-580	PROVIDE WITH OPPOSED BLADE BALANCING DAMPERS
S4	GRILLE	24x24	24x24	A = 12"x6"	0.08	STEEL	TITUS / TMS	PROVIDE WITH OPPOSED BLADE BALANCING DAMPERS
R1	PERFORATED	24x24	24x24	A = 12"x12" B = 18"x18"	0.08	STEEL	TITUS / PAR	
E1	PERFORATED	24x24	12x12	A = 10"x10"	0.08	STEEL	TITUS / PAR	

NOTES:
1. PROVIDE ALL AIR DEVICES WITH FACTORY COLOR OF WHITE, UNLESS NOTED OTHERWISE
2. PROVIDE EACH AIR DEVICE WITH THE CORRECT MOUNTING FRAME TYPE TO MATCH CEILING TYPE WHERE INSTALLED. VERIFY MOUNTING TYPE PRIOR TO ORDERING

UNIT HEATER SCHEDULE

UNIT NO.	TYPE	CFM	CAPACITY (Kw)	ELECTRICAL V	PH	HZ	MFR. & MODEL NO.	REMARKS
EDH-1	ELECTRIC	400	6	208	3	60	INDEECO QUA	
EDH-2	ELECTRIC	120	2	208	3	60	INDEECO QUA	
UH-1	ELECTRIC	700	3	208	3	60	INDEECO UCI	WITH 1/30 HP FAN
UH-2	ELECTRIC	700	3	208	3	60	INDEECO UCI	WITH 1/30 HP FAN

NOTES:
- PROVIDE UH UNITS WITH FACTORY MOUNTED DISCONNECT AND WALL MOUNTED (WHITE) LINE VOLTAGE THERMOSTAT
- PROVIDE EDH UNITS WITH SCR CONTROLLER AND INTERGRAL ACCESS DOOR DISCONNECT

PUMP SCHEDULE

PUMP NO.	TYPE	SERVICE	GPM	HEAD FT	RPM	EEF %	ELECTRICAL HP	V	PH	HZ	MANUFACTURER & MODEL NO.	REMARKS
P-1A	BASE MOUNTED	GEO-EXCHANGE	100	50	1150	58	5	208	3	60	B&G 1510	RATED FOR VFD USE
P-1B	BASE MOUNTED	GEO-EXCHANGE	100	50	1150	58	5	208	3	60	B&G 1510	RATED FOR VFD USE

-PROVIDE EACH PUMP WITH A VFD AND INTERGRAL DISCONNECT

PIPE INSULATION SCHEDULE

SERVICE	DOMESTIC HOT		DOMESTIC COLD		RAIN HARVESTED		GEO-EXCHANGE		CONDENSATE DRAIN	
LOCATION	INDOORS		INDOORS		INDOORS		INDOORS		INDOORS	
TEMPERATURE	55-200 F		42-55 F		42-55 F		42-105 F		42-55 F	
INSULATION	MOLDED FIBERGLASS		MOLDED FIBERGLASS		MOLDED FIBERGLASS		MOLDED FIBERGLASS		MOLDED FIBERGLASS	
JACKET	ASJ		ASJ		ASJ		ASJ		ASJ	
WEATHERPROOFING	NONE		NONE		NONE		NONE		NONE	
	PIPE SIZE	INSUL THICK	PIPE SIZE	INSUL THICK	PIPE SIZE	INSUL THICK	PIPE SIZE	INSUL THICK	PIPE SIZE	INSUL THICK
MINIMUM	3/4" – 1"	1"	3/4" – 1"	3/4"	3/4" – 1"	3/4"	3/4" – 1"	1"	3/4" – 1"	1/2"
INSULATION	1 1/4" – 1 1/2"	[illegible]	1 1/4" – 1 1/2"	[illegible]	1 1/4" – 1 1/2"	[illegible]	1 1/4" – 1 1/2"	[illegible]	1 1/4" – 1 1/2"	[illegible]
THICKNESS	2" – 4"	1 1/2"	2" – 4"	1'	2" – 4"	1'	2" – 4"	1 1/2"	2" – 4"	1"
	6"	1 1/2"	6"	1"	6"	1"	6"	1 1/2"	6"	1"
	8" & UP	1 1/2"	8" & UP	1"	8" & UP	1"	8" & UP	1 1/2"	8" & UP	1"
REMARKS:										

- PROVIDE 1" ELASTOMERIC INSULATION ON ALL EXPOSED PIPES BELOW SINKS IN ADA COMPLIANT SPACES.
-PROVIDE 1" ELASTOMERIC INSULATION ON HARVESTED WATER TANK, EXPANSION TANK, AND AIR SEPARATOR
- INSTALL PRETENSION PIPE MARKERS ON ALL PIPING. MARKER SHALL INDICATE FLOW DIRECTION AND SYSTEM. PROVIDE SUBMITTAL WITH SYSTEM NAMES AND COLORS

DUCT CONSTRUCTION AND INSULATION SCHEDULE

SERVICE		SUPPLY AIR	SUPPLY AIR	RETURN AIR	EXHAUST AIR	OUTDOOR AIR	RELIEF AIR
DUCT SECTION	FROM:	ERU	GSHP	SPACE	SPACE	INTAKE	ERU
	TO:	GSHP	SPACE	GSHP	ERU	ERU	DISCHARGE
DUCT SECTION	INDOORS EXPOSED:	X	X	X	X	X	X
	INDOORS CONCEALED:	X	X	X	X	X	X
	OUTDOORS:	–	–	–	X	X	–
PRESSURE CLASSIFICATION:		+/- 2.0" H2O	+/- 2.0" H2O	+/- 2.0" H2O	+/- 2.0" H2O	+/- 3.0" H2O	+/- 2.0" H2O
SMACNA CLASSIFICATION:		A	A	A	A	A	A
OUTER WALL MATERIAL:		GALV. STEEL	GALV. STEEL	GALV. STEEL	GALV. STEEL	GALV. STEEL	GALV. STEEL
INNER WALL MATERIAL:		–	–	–	–	–	–
DUCT AIR TEMPERATURE:		>52 DEG F	>52 DEG F	ALL TEMPS.	ALL TEMPS.	>52 DEG F	ALL TEMPS.
EXTERIOR INSULATION	TYPE:	FIBERGLASS	FIBERGLASS	FIBERGLASS	–	FIBERGLASS	–
	THICKNESS:	2"	2"	2"	–	2"	–
	VAPOR BARRIER:	FRK	FRK	FRK	–	FRK	–
INTERNAL LINER	THICKNESS:	--	--	–	–		–
	DENSITY:	--	--	–	–		–
REMARKS:							

NOTES:
- INSULATE THE TOPS OF ALL AIR DEVICE WITH THE SAME MATERIAL AS THE DUCTWORK WHICH THEY ARE CONNECTED TO
- REMOVE ALL DUCT FABRICATION LABELS (AND/OR CONSTRUCTION MARKINGS) FROM EXPOSED DUCTWORK THAT IS NOT INSULATED.

ENERGY RECOVERY UNIT SCHEDULE WITH COIL SECTION

UNIT NO.	LOCATION	SUPPLY FAN DATA CFM	E.S.P (IN H2O)	MOTOR (HP)	V	PH	HZ	RETURN FAN DATA CFM	E.S.P (IN H2O)	MOTOR (HP)	V	PH	HZ	COOLING SEASON OUTDOOR TEMP F (DB)	OUTDOOR TEMP F (WB)	HUMIDITY (GR.)	RETURN AIR TEMP F (DB)	RETURN AIR TEMP F (WB)	HUMIDITY (GR.)
ERU-1	MECH ROOM	4530	0.75	3	208	3	60	3905	0.75	3	208	3	60	95	79	126	75	63	65

ENERGY RECOVERY UNIT SCHEDULE WITH COIL SECTION

UNIT NO.	HEATING SEASON OUTDOOR TEMP F (DB)	OUTDOOR TEMP F (WB)	HUMIDITY (GR.)	RETURN AIR TEMP F (DB)	RETURN AIR TEMP F (WB)	HUMIDITY (GR.)	ERU DELIVERED CONDITIONS TO ACU'S – COOLING SEASON SUPPLY (CFM)	RETURN (CFM)	TEMP F (DB)	TEMP F (WB)	ERU'S EFFECTIVENESS	HEATING SEASON TEMP F (DB)	HUMIDITY (GR.)	ERU'S EFFECTIVENESS	GSHP DATA WATER (GPM)	EWT (F) COOLING	EWT (F) HEATING	BASIS OF DESIGN MANUFACTURER & MODEL No.
ERU-1	15	8.4	0.1	70	55	41	4530	3905	55	54	0.8	60	41	0.8	49	85	50	CLIMATEMASTER "TO SIZE 15"

- PROVIDE UNIT WITH GROUND SOURCE HEAT PUMP COIL SECTION COMPLETE AND FACTORY INSTALLED.
- PROVIDE UNIT WITH FACTORY CONTROLLER AND ALL ASSOCIATED RELAYS AND CONTACTS.
- REFER TO THE CONTROL DIAGRAM FOR ADDITIONAL REQUIRMENTS AND INFORMATION
- PROVIDE WITH REFRIGERANT R-410

ADDITIONAL EQUIPMENT NOTES/DETAILS

VFD SPECIFICATIONS
FURNISH VFD DRIVES FOR DIV 16 INSTALLATION, SUITED FOR HVAC APPLICATIONS AND THE MOTORS THEY SERVE. PROVIDE EACH VFD WITH THE FOLLOWING FACTORY INSTALLED MINIMUM FEATURES:
- PULSE WITH MODULATION (PWM)
- OUT PUT SWITCHING hz SHALL BE SELECT ABLE AT 4 OR 8 khZ. THE CARRIER hZ MUST BE LESS THEN 10kHz
- 5% IMPEDANCE
- NO BY-PASS OVERRIDE WILL BE PERMITTED
- THERMAL MOTOR OVERLOADS
- DISCONNECT SWITCH
- NEMA 1
- BACNET COMPLIANT
- POWER FACTOR, .98 REGARDLESS OF SPEED OR LOAD
- 98% EFFICIENCY
- FULL DIGITAL DISPLAY AND KEY PAD TO ALLOW USER INTERFACE
- UL LISTED
- 30 MONTH WARRANTED ON PARTS,LABOR AND ALL ASSOCIATED EXPENSE FOR REPAIRS

GROUND SOURCE HEAT PUMP

UNIT NO.	ESP	SUPPLY AIR (CFM)	OUTSIDE AIR (CFM)	SUPPLY FAN (HP)	LOOP WATER DATA – COOLING MAX WATER TEMP (F)	PRESSURE DROP (FT OF WATER)	FLOW (GPM)	COOLING CAPACITY TOTAL (MBTUH)	SENS. (MBTUH)	EAT (db / wb)	LOOP WATER DATA – HEATING MIN WATER TEMP (F)	FLOW (GPM)	HEATING CAPACITY TOTAL (MBTUH)	EAT /LAT (F db)	ELECTRICAL V	PH	HZ	EFFICIENCY EER	MANUFACTURER & MODEL NO.
GSHP-1	0.5	1710	1305	0.75	85	11.9	15	71	50.2	55 / 54	50	15	56	65 / 95	208	3	60	15	CLIMATEMASTER TS070 ECM
GSHP-2	0.5	1820	1415	0.75	85	11.9	15	71	50.2	55 / 54	50	15	56	65 / 96	208	3	60	15	CLIMATEMASTER TS070 ECM
GSHP-3	0.5	815	450	0.60	85	5	6.0	29	18	55 / 54	50	6.0	26	65 / 95	208	1	60	15	CLIMATEMASTER TS030 ECM
GSHP-4	0.5	1920	1360	0.75	85	11.9	15	71	50.2	55 / 54	50	15	56	65 / 95	208	3	60	15	CLIMATEMASTER TS070 ECM

NOTES:
- MAX AND MIN, WATER TEMPERATURES ARE TEMPERATURES ENTERING THE HEAT PUMP
- PROVIDE 1" THROWAWAY FILTERS DURING CONSTRUCTION AND REPLACE WITH HIGH MERV RATED FILTERS JUST PRIOR TO TURNOVER.
- SELECTIONS FOR THE ABOVE MUST BE MADE AT THE MAX. AND MIN WATER TEMPERATURE LISTED FOR COOLING AND HEATING
- PROVIDE UNITS WITH FACTORY MOUNTED ATUOMATIC FLOW REGULATORS
- PROVIDE UNITS WITH FACTORY MOUNTED AND CONNECTED 2-WAY CONTROL VALVE
- PROVIDE UNITS WITH FACTORY EXTENDED RANGE INSULATION FOR <35 DEG F WATER TEMPERATURES AND ON SUCTION SIDE OF REFRIGERANT TUBING.

ENGINEERS • ARCHITECTS • PLANNERS
DJG INC.
449 McLaws Circle, Williamsburg, VA 23185
Phone: 757.253.0673 Fax: 757.253.2319
Norfolk-Virginia Beach: 757.874.5015
www.djginc.com
COMMITTED TO EXCELLENCE

COMMONWEALTH OF VIRGINIA
KERRY PATRICK HERR
No. 041864
8-3-06
PROFESSIONAL ENGINEER

THIS DOCUMENT CONTAINS INFORMATION PROPRIETARY TO DJG, INC. AND IS FURNISHED IN CONFIDENCE AN AN INSTRUMENT OF SERVICE FOR THE LIMITED PURPOSE OF EVALUATION, BIDDING AND REVIEW, OR CONSTRUCTION OF A SPECIFIC PROJECT. REPRODUCTION OF THIS DOCUMENT, IN WHOLE OR IN PART, OR THE MODIFICATION OF ANY DETAIL OR DESIGN WITHOUT THE EXPRESSED, WRITTEN CONSENT OF DJG, INC. IS PROHIBITED. ALL RIGHTS RESERVED. COPYRIGHT (C) 2006.

REVISIONS

NO.	DATE	DESCRIPTION

MECHANICAL SCHEDULES

VIRGINIA DEPARTMENT OF TRANSPORTATION
NEW KENT SAFETY REST AREA AND INFORMATION CENTER
NEW KENT COUNTY, VIRGINIA

SCALE AS NOTED | DESIGNED KPH | DRAWN KPH | CHECKED KPH | DATE 8/3/06

COMMISSION NUMBER 2070030

SHEET NUMBER M2

P:\2070030\Mechanical\2070030M2.dwg, M2, 8/3/2006 2:37:24 PM

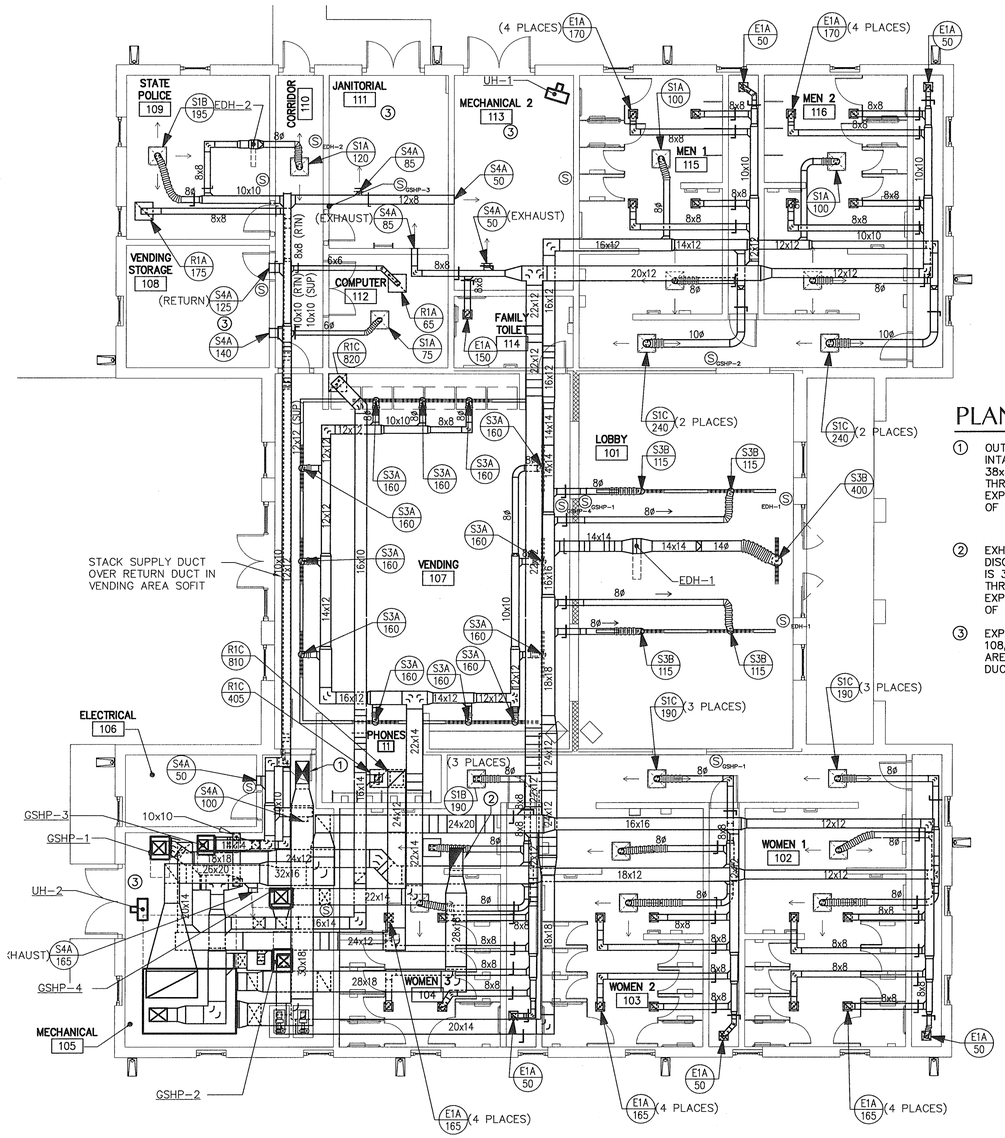

PLAN REFERENCE NOTES

1. OUTSIDE AIR DUCTWORK FROM MECHANICAL ROOM TO INTAKE CHIMNEY. VERTICAL DUCTWORK IN CHIMNEY IS 38x30. FLASH AND SEAL DUCTWORK PENETRATION THROUGH ROOF LINE DECK WATER TIGHT. PAINT EXPOSED DUCTWORK IN CHIMINY CAP WITH 2 COATS OF WATER AND UV PROOF MASTIC
2. EXHAUST AIR DUCTWORK FROM ROOM 104 TO DISCHARGE CHIMNEY. VERTICAL DUCTWORK IN CHIMNEY IS 36x24. FLASH AND SEAL DUCTWORK PENETRATION THROUGH ROOF LINE DECK WATER TIGHT. PAINT EXPOSED DUCTWORK IN CHIMINY CAP WITH 2 COATS OF WATER AND UV PROOF MASTIC
3. EXPOSED DUCTWORK OVERHEAD IN ROOMS 105, 106, 108, AND 113. NO FLEXDUCT ALLOWED IN THESE AREAS. COORDINATE AIR DEVICE MOUNTING TYPE FOR DUCT MOUNTING.

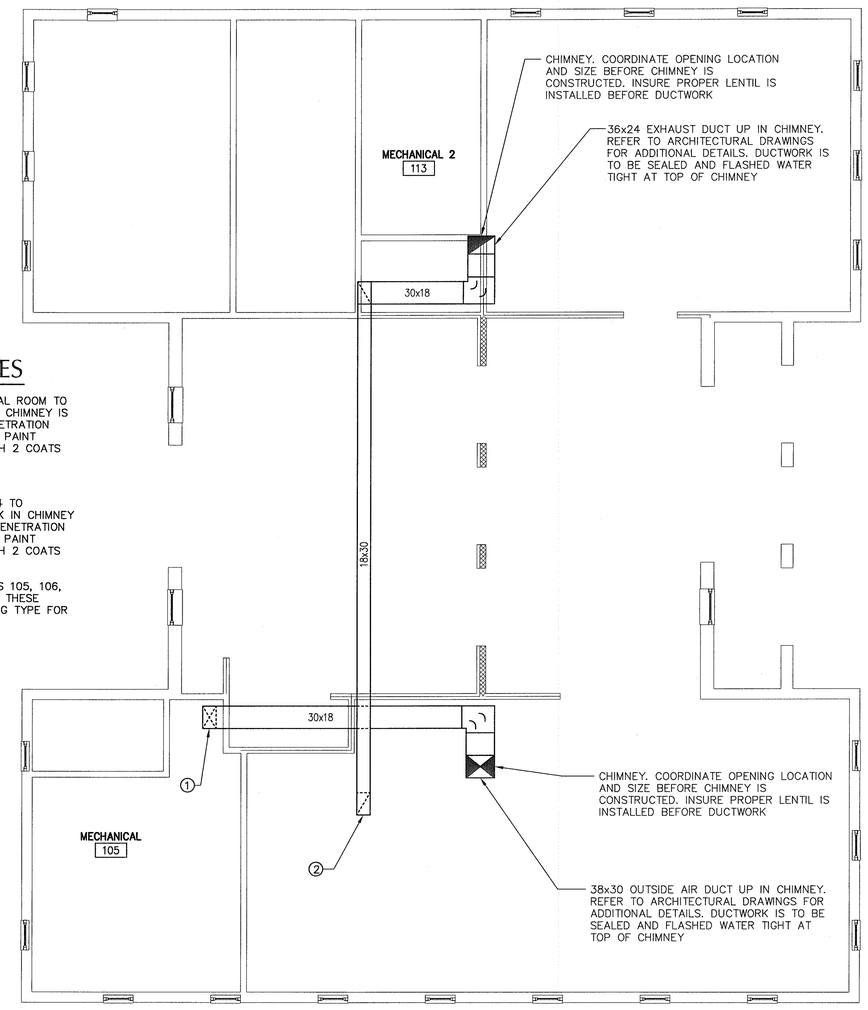

PROJECT NORTH TRUE NORTH

MECHANICAL DUCTWORK FLOOR PLAN

SCALE: 1/8" = 1'-0"

MECHANICAL DUCTWORK ATTIC PLAN

SCALE: 1/8" = 1'-0"

GRAPHIC SCALE

0 4 8 12 16 20 24

SCALE: 1/8" = 1'-0"

ENGINEERS • ARCHITECTS • PLANNERS
DJG INC.
449 McLaws Circle, Williamsburg, VA 23185
Phone: 757.253.0673 Fax: 757.253.2319
Norfolk-Virginia Beach: 757.874.5015
www.djginc.com
COMMITTED TO EXCELLENCE

COMMONWEALTH OF VIRGINIA
KERRY PATRICK HERR
No. 041864
8/3/06
PROFESSIONAL ENGINEER

THIS DOCUMENT CONTAINS INFORMATION PROPRIETARY TO DJG, INC. AND IS FURNISHED IN CONFIDENCE AND AN INSTRUMENT OF SERVICE FOR THE LIMITED PURPOSE OF EVALUATION, BIDDING AND REVIEW, OR CONSTRUCTION OF A SPECIFIC PROJECT. REPRODUCTION OF THIS DOCUMENT, IN WHOLE OR IN PART, OR THE MODIFICATION OF ANY DETAIL OR DESIGN WITHOUT THE EXPRESSED WRITTEN CONSENT OF DJG, INC. IS PROHIBITED. ALL RIGHTS RESERVED. COPYRIGHT (C) 2006.

REVISIONS

NO.	DATE	DESCRIPTION

MECHANICAL DUCTWORK FLOOR AND ATTIC PLANS

VIRGINIA DEPARTMENT OF TRANSPORTATION
NEW KENT SAFETY REST AREA AND INFORMATION CENTER
NEW KENT COUNTY, VIRGINIA

SCALE AS NOTED | DESIGNED DSM | DRAWN DSM | CHECKED KPH | DATE 8/3/06

COMMISSION NUMBER 2070030

SHEET NUMBER M3

P:\2070030\Mechanical\2070030M3.dwg, M2, 8/3/2006 3:26:06 PM

PLAN REFERENCE NOTES

1. PROVIDE TEMPERATURE AND PRESSURE GAUGES AS SHOWN ON THE CONTROL DIAGRAM. ALL DISCHARGE AND WELL PIPING SHALL BE INSTALLED AGAINST THE EXTERIOR WALL. MARK ALL PIPING IN THE MECHANICAL ROOM WITH PRETENSIONED PIPER MARKERS INDICATING FLOW AND SYSTEM NAME. PROVIDE SAMPLE OF MARKER WITH SYSTEM COLOR AND SYSTEM NAME CHART FOR APPROVAL

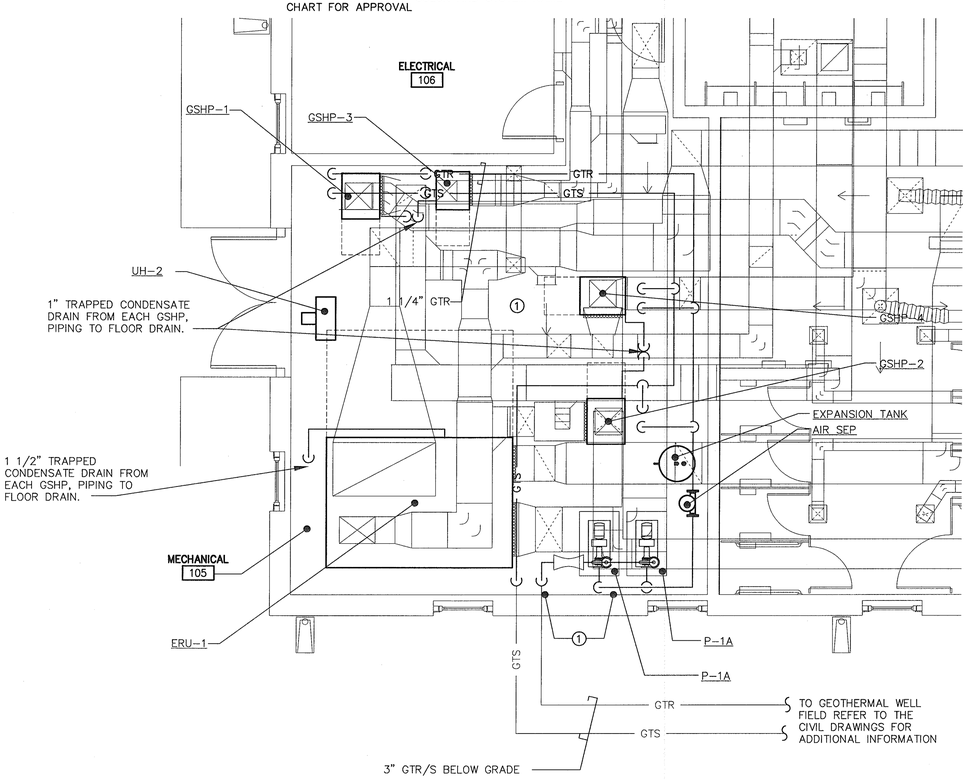

PROJECT NORTH

TRUE NORTH

MECHANICAL PIPING PARTIAL FLOOR PLAN

SCALE: 1/4" = 1'-0"

GRAPHIC SCALE

0 2 4 6 8 10 12

SCALE: 1/4" = 1'-0"

ENGINEERS • ARCHITECTS • PLANNERS

DJG INC.

449 McLaws Circle, Williamsburg, VA 23185
Phone: 757.253.0673 Fax: 757.253.2319
Norfolk-Virginia Beach: 757.874.5015
www.djginc.com

COMMITTED TO EXCELLENCE

COMMONWEALTH OF VIRGINIA
KERRY PATRICK HERR
No. 041884
8-3-06
PROFESSIONAL ENGINEER

THIS DOCUMENT CONTAINS INFORMATION PROPRIETARY TO D.J.G., INC. AND IS FURNISHED IN CONFIDENCE FOR INFORMATION, REVIEW, OR CONSTRUCTION OF A SPECIFIC PROJECT. REPRODUCTION OF THIS DOCUMENT, IN WHOLE OR IN PART, OR DISCLOSURE OF ANY INFORMATION CONTAINED HEREIN WITHOUT WRITTEN CONSENT OF D.J.G., INC. IS PROHIBITED. ALL RIGHTS RESERVED. COPYRIGHT (C) 2006.

REVISIONS

NO.	DATE	DESCRIPTION

MECHANICAL PIPING PARTIAL FLOOR PLAN

VIRGINIA DEPARTMENT OF TRANSPORTATION
NEW KENT SAFETY REST AREA AND INFORMATION CENTER
NEW KENT COUNTY, VIRGINIA

SCALE	DESIGNED	DRAWN	CHECKED	DATE
AS NOTED	KPH	KPH	KPH	8/3/06

COMMISSION NUMBER
2070030

SHEET NUMBER
M4

P:\2070030\Mechanical\2070030M4.dwg, M4, 8/3/2006 3:14:24 PM

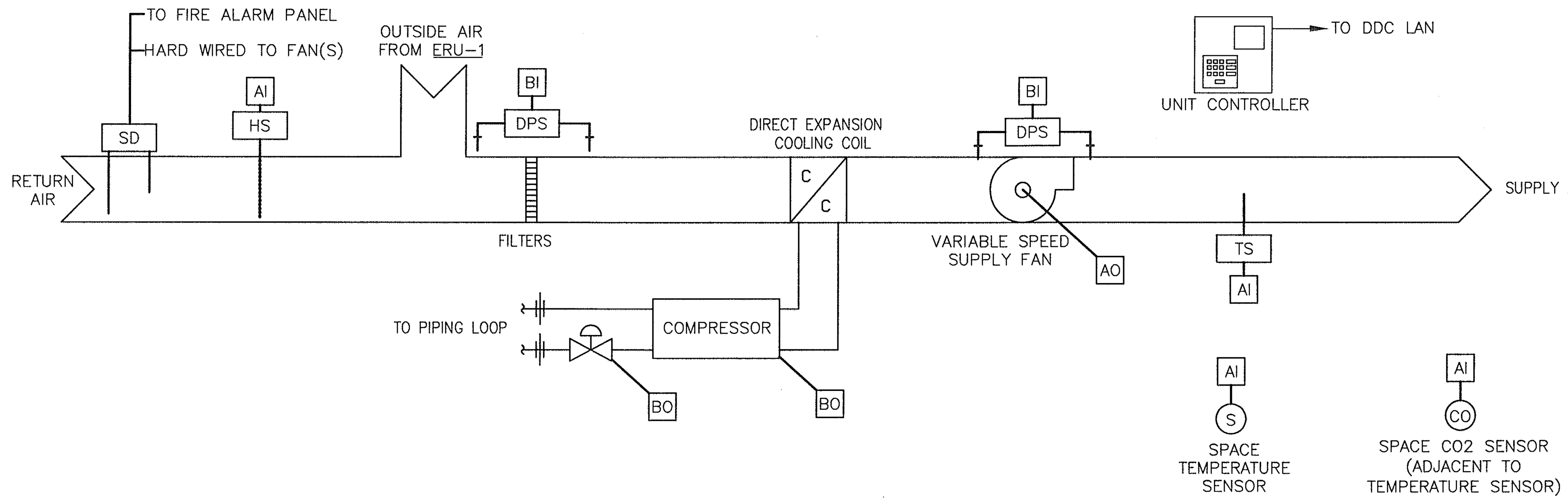

TYPICAL GROUND SOURCE HEAT PUMP UNIT (GSHP-1, -2, -3, & -4)

SCALE: NONE

GROUND SOURCE HEAT PUMP CONTROL SEQUENCE:

UNOCCUPIED MODE: DURING THE UNOCCUPIED CYCLE, THE UNIT SHALL MAINTAIN UNOCCUPIED MODE TEMPERATURES BY CYCLING THE UNIT FOR HEATING OR COOLING.

OCCUPIED MODE: DURING THE OCCUPIED MODE, THE UNIT SUPPLY FAN SHALL RUN CONTINUOUSLY. ON A RISE IN SPACE TEMPERATURE ABOVE THE COOLING SETPOINT, THE REVERSING VALVE SHALL BE POSITIONED TO THE COOLING POSITION AND THE REFRIGERATION COMPRESSOR SHALL BE STARTED. ON A FALL IN SPACE TEMPERATURE TOWARD THE COOLING SETPOINT, THE COMPRESSOR SHALL BE DE-ENERGIZED. ON A FURTHER FALL IN SPACE TEMPERATURE BELOW THE COOLING SETPOINT AND THROUGH AN ADJUSTABLE DEADBAND, THE REFRIGERATION COMPRESSOR SHALL REMAIN OFF. ON A FALL IN SPACE TEMPERATURE BELOW HEATING SETPOINT, THE REVERSING VALVE SHALL BE POSITIONED IN THE HEATING POSITION AND THE REFRIGERATION COMPRESSOR SHALL BE STARTED. ON A RISE IN SPACE TEMPERATURE TOWARD HEATING SETPOINT, THE REVERSE SEQUENCE SHALL OCCUR. ANY FACTORY CAPACITY CONTROL SHALL BE INCORPORATED INTO THE ABOVE SEQUENCE AND SUBMITTED TO THE ENGINEER FOR APPROVAL.

THE ROOM TEMPERATURE SENSOR SHALL BE PROTECTED FROM VANDALISM BY A HIGH IMPACT PLASTIC OR BAKED ENAMEL METAL COVER. INSTALL AT THE SAME HEIGHT AS THE LIGHT SWITCHES. AN AVERAGING TEMPERATURE SENSOR SHALL BE LOCATED IN THE HEAT PUMP DISCHARGE AIR STREAM FOR MONITORING THE TEMPERATURE. PROVIDE A FILTER DIFFERENTIAL PRESSURE SWITCH ACROSS THE FILTERS TO PROVIDE A LOW LEVEL ALARM WHEN THE FILTERS REQUIRE CHANGING, ADJUST THE SWITCH DIFFERENTIAL IN CONSULTATION WITH THE GSHP EQUIPMENT REPRESENTATIVE.

WHEN THE PRODUCTS OF COMBUSTION ARE SENSED BY THE SMOKE DETECTORS IN THE RETURN DUCTS, THE FAN(S) SHALL BE DE-ENERGIZED, DAMPERS SHALL BE CLOSED, ALL DEVICES (CONTROL DAMPERS, VALVES, ETC.) SHALL GO TO THEIR UNOCCUPIED MODE POSITIONS AND AN ALARM SHALL BE SENT TO THE DIGITAL CONTROLLER AND THE FIRE ALARM PANEL.

DURING THE COOLING SEASON THE GSHP'S WHICH ARE 100% O.A. SHALL HAVE THE ABILITY TO PROVIDE NEUTRAL AIR TO THE SPACE IF COOLING IS NOT REQUIRED. THIS SHALL BE DONE BY REDUCING THE SPEED OF THE SUPPLY FAN AND USING THE HEATING MODE OF OPERATION OF THE HEAT PUMP IN ITS LOWEST HEATING LEVEL.

WHEN THE INDOOR CONCENTRATION OF CO2 HAS REACHED 9000 PPM, AS SENSED BY THE WALL MOUNTED CO2 SENSORS, AN ALARM SHALL BE SENT TO THE OPERATORS WORK STATION. THE WORK STATION SHALL DISPLAY SPECIFIC INSTRUCTIONS FOR THE MAINTENANCE STAFF TO FOLLOW TO REDUCE THE CO2 CONCENTRATION LEVELS WITHIN THE BUILDING.

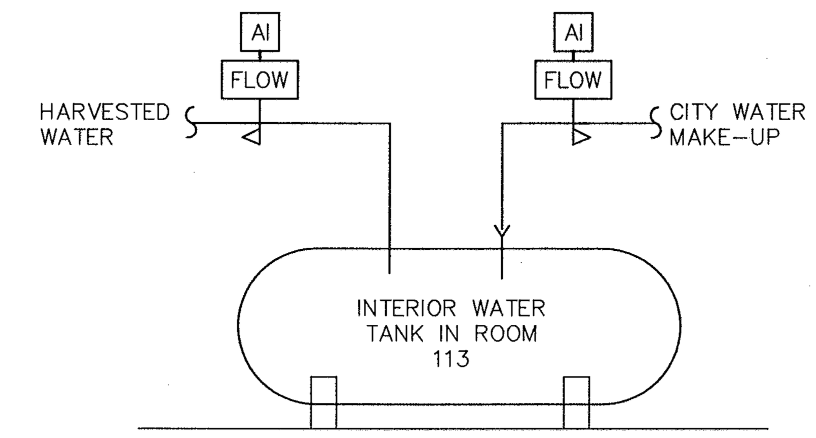

PROVIDE TWO WATER METERS TO ALLOW THE HVAC DDC SYSTEM TREND THE WATER USAGE OF THE RAIN WATER HARVEST SYSTEM AND THE WATER USAGE OF THE CITY WATER USED FOR MAKE UP TO THE RAIN HARVEST SYSTEM. PROVIDE GRAPHICS, SIMILAR TO THE HVAC SYSTEM GRAPHICS, TO INTERFACE AND DISPLAY THE DATA (REAL TIME) ON THE OPERATORS WORK STATION. SUBMIT THE GRAPHIC INTERFACE AND DISPLAY FOR THIS SYSTEM WITH THE FULL DDC SUBMITTAL

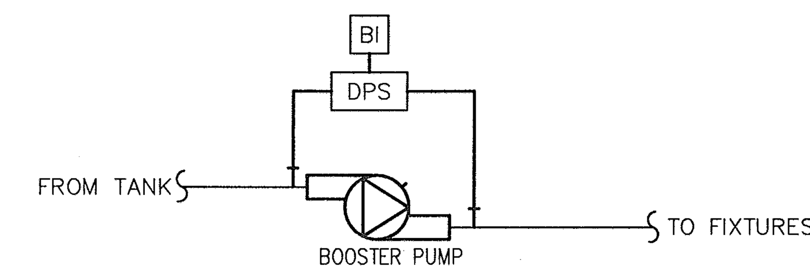

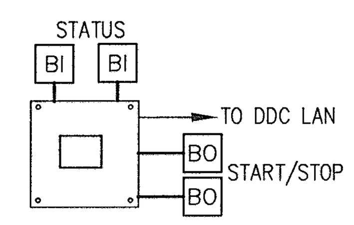

OUTSIDE SUMP PUMP CONTROLLER

PROVIDE ALARM STATUS FOR OUTSIDE PUMP OPERATION AND HIGH WATER LEVEL FROM SUMP PUMP CONTROL PANEL (REFER TO PLUMBING DRAWINGS FOR CONTROL PANEL DETAILS). COORDINATE REQUIRED SENSORS AND RELAYS TO ACHIEVE THE ABOVE WITH THE SUMP CONTROL PANEL SELECTED.

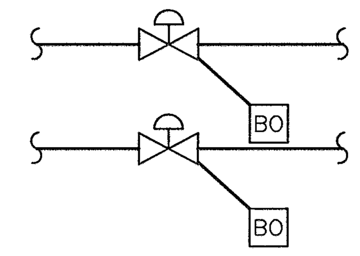

PROVIDE 2-WAY CONTROL VALVE TO ALLOW FOR AUTOMATIC FILTER LEAD/LAG CHANGE OVER WHEN THE LEAD ORIVAL FILTER GOES INTO AUTOMATIC CLEANING/RINSE MODE. SWITCHING OF THE ORIVAL FILTERS FROM LEAD/LAG SHALL BE DONE AT THE NEXT AUTOMATIC CLEANING/RINSE CYCLE. BEFORE THE CLOSING THE LEAD CONTROL VALVE THE ASSOCIATED PUMP SHALL BE DE-ENERGIZED AND THE LAG CONTROL VALVE OPEND. THE LAG PUMP SHALL THEN BE ENERGIZED TO ALLOW FLOW THROUGH THE LAG ORIVAL FILTER.

RAIN WATER HARVEST SYSTEM

SCALE: NONE

PROVIDE MINIMUM 8 SPARE BI AND BO FOR USE WHEN CONNECTING THE CONTROL POINTS LISTED ON DRAWING P5. REFER TO THE PLUMBING DRAWINGS FOR ADDITIONAL DETAILS.

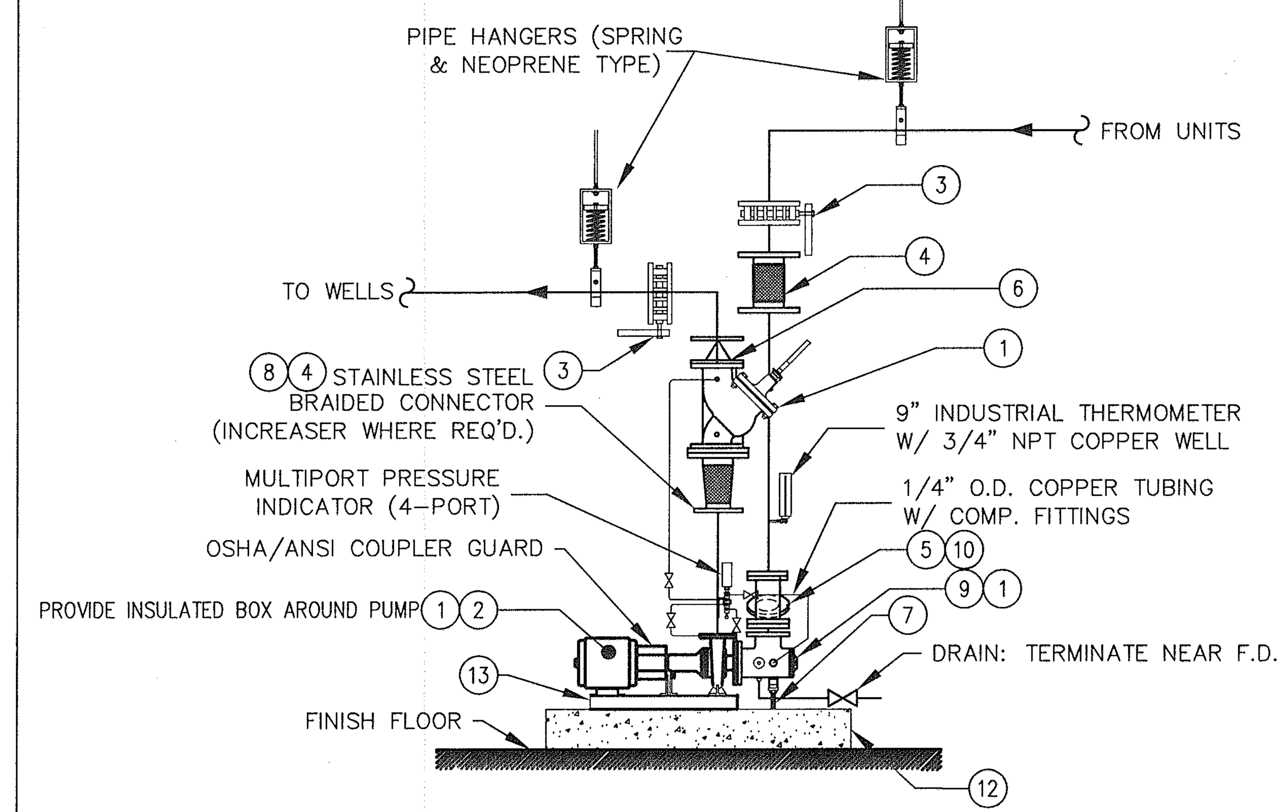

BASE MOUNTED PUMP DETAIL (P-1A & P-1B)

SCALE: NONE

1. END SUCTION PUMP, B&G 1510 OR EQUAL
2. VFD RATED MOTOR
3. BUTTERFLY VALVE WITH MEMORY STOP
4. SS FLEXIBLE CONNECTOR
5. Y-TYPE STRAINER
6. CHECK VALVE – SILENT SPRING TYPE
7. PIPE SUPPORT
8. CONCENTRIC REDUCER
9. SUCTION DIFFUSER WITH STRAINER
10. BALL VALVE WITH NIPPLE AND CAP ATTACHED TO STRAINER
11. TRIPLE DUTY VALVE (MAX 3PSI PD AT DESIGN FLOW)
12. 3" CONCRETE HOUSEKEEPING PAD
13. PUMP AND FACTORY MOTOR BASEPLATE

NOTES: 1. MATCH PUMP MOTOR AND VFD PRIOR TO SUBMITTAL OF CUT SHEETS FOR APPROVAL
2. PROVIDE CHECK VALVE 5 PIPE DIAMETERS FROM PUMP DISCHARGE OR ELBOW. PROVIDE SPOOL PIECE AS REQUIRED
3. PROVIDE ALL VALVES, STRAINERS, FITTINGS ETC. AS FULL LINE SIZE

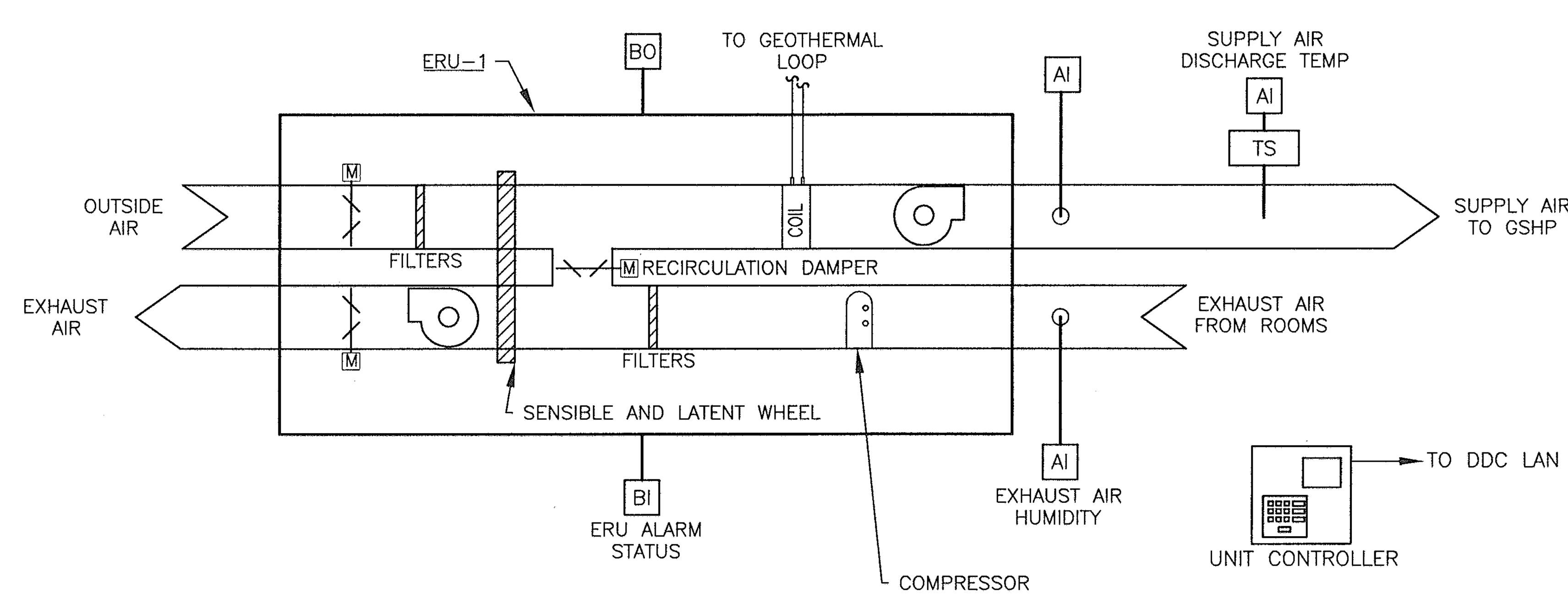

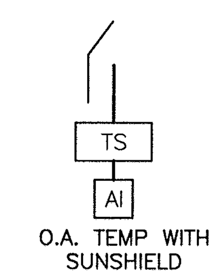

NOTE: PROVIDE ALL CONTROL DEVICES AS SHOWN AND REQUIRED UNDER SECTION 15900 FOR THE ERU. SOME SENSOR'S MAY DUPLICATE SENSORS INSTALLED BY THE ERU MANUFACTURER, THE SECTION 15900 CONTRACTOR MAY AT THEIR OPTION (AND WITH PRIOR AND FINAL APPROVAL FROM THE DESIGN ENGINEER) SHARE SENSORS WITH THE ERU; COORDINATE WITH ERU MANUFACTURER FOR COMPATIBILITY AND LOCATIONS

ENERGY RECOVER UNIT WITH GROUND SOURCE HEAT PUMP (ERU-1)

SCALE: NONE

STARTUP:
A START SIGNAL SHALL BE SENT FROM THE BUILDINGS DIGITAL CONTROLLER TO THE ENERGY RECOVERY UNIT'S (ERU'S) FACTORY CONTROL PANEL. THE ERU'S INTERNAL LODGIC/CONTROLS SHALL OPEN DAMPERS, START FANS AND INITIATE ROTATION OF THE THE ENERGY WHEEL IN THE OPTIMUM SEQUANCE.

OCCUPIED / NORMAL MODE OF OPERATION:
THE ENERGY RECOVERY UNIT (ERU) HAS A FACTORY INSTALLED AND TESTED DIGITAL CONTROL PANEL. THIS CONTROL PANEL WILL CONTROL AND PERFORM ALL CRITICAL FUNCTIONS, TO MAINTAIN MAXIMUM EFFECTIVENESS, OF THE ERU. THE MAIN BUILDING DIGITAL CONTROL SYSTEM / THERMOSTATS SHALL ONLY OBSERVE THE OPERATION OF THE ERU AND PROVIDE A START STOP SIGNAL TO THE UNIT.
THE BUILDING CONTROL SYSTEM SHALL PROVIDE A START/STOP SIGNAL TO THE ERU WHICH WILL CAUSE THE UNIT'S CONTROLLER TO START IT'S "START-UP" SEQUENCE. CONNECT TO THE ERU ALARM OUTPUT CONTACT TO THE LED WALL PLATE, TO PROVIDE THE BUILDING OCCUPANTS AN INDICATION THAT THE ERU WHEEL HAS STOPPED FOR AN EXCESSIVE PERIOD OF TIME AS DETERMINED BY THE ERU MANUFACTURER OR A CRITICAL ALARM HAS BEEN ACTIVATED.. A DIFFERENTIAL PRESSURE SWITCH INSTALLED ACROSS EACH FAN SHALL PROVIDE PROOF OF OPERATION. IF THE DIFFERENTIAL PRESSURE SWITCH INDICATES THAT EITHER FAN IS NOT OPERATING WHEN THE ERU IS COMMANDED ON BY THE DIGITAL CONTROLLER / THERMOSTATS, AN ALARM SHALL BE SENT TO THE LED WALL PLATE. PROVIDE A DIFFERENTIAL PRESSURE SWITCH ACROSS EACH BANK OF FILTERS IN THE ERU TO SEND AN ALARM SIGNAL TO THE LED WALL PLATE IF THE FILTERS ARE FULLY LOADED (DIRTY, BASED ON MANUFACTURER'S CATALOGED DATA). LOCATE THE OUTDOOR AIR TEMPERATURE SENSOR SO PROPER AIR TEMPERATURE CAN BE OBTAINED WHEN THE ERU IS IN THE UNOCCUPIED MODE.

ALL DEVICES WITHIN THE ERU SHALL DEFAULT TO THEIR UNOCCUPIED POSITION DURING ANY SHUTDOWNS OF THE ERU DUE TO ANY ALARMS OR MALFUNCTIONS.

PROVIDE A LOW VOLTAGE TWO LED WALL PLATE FOR ERU-1 STATUS. THE "GREEN" LED SHALL INDICATE NO ALARMS AND THE ERU-1 IS OPERATING AS DESIGNED. THE "RED" LED WILL INDICATE AN ALARM IS PRESENT AT THE ERU CONTROLLER AND ATTENTION IS REQUIRED. COORDINATE AND LOCATE LED WALL PLATE IN ROOM 103. PROVIDE ALL REQUIRED WIRING, RELAYS, AND PROGRAMMING REQUIRED TO PROVIDE PROPER OPERATION OF LEDS. PROVIDE THE ENGINEER WITH A LIST OF ALL ALARMS SENT TO THE ERU CONTROL PANEL. THE ENGINEER WILL SELECT WHICH ALARMS ARE TO BE INDICATED AS A "RED" LED

DURING THE CLOSEOUT PROCESS THIS OPERATION WILL BE DEMONSTRATED TO THE OWNER/ENGINEER. PROVIDE NAME PLATE BELOW THE WALL PLATE INDICATING WHICH UNIT IS SERVED BY THE WALL PLATE

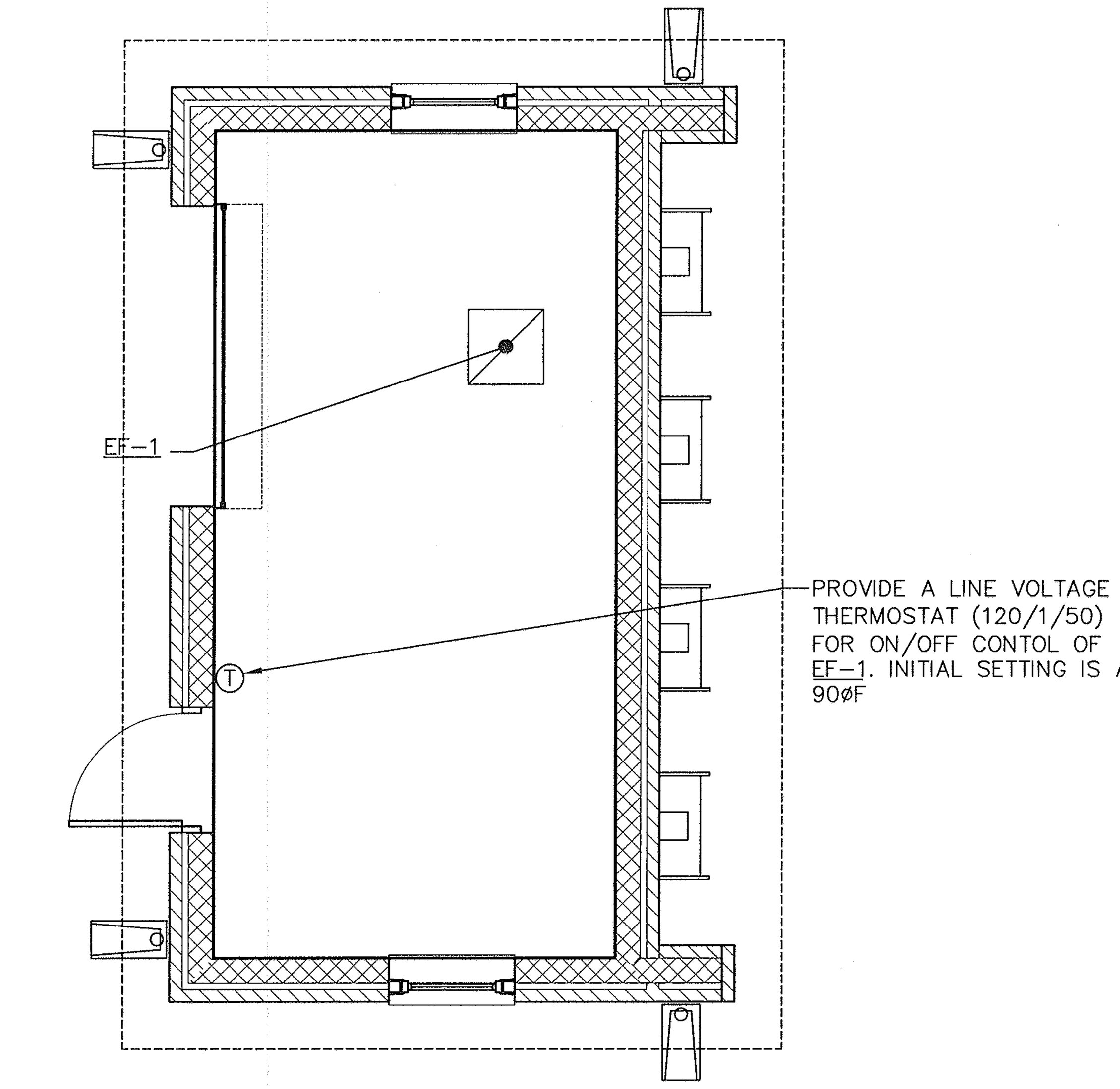

ERU-1

- PROVIDE INLINE CENTRIFUGAL EXHAUST FAN WITH A PAINTED ROOF MOUNTED DISCHARGE HOOD.
- PROVIDE 12x12 DUCTWORK FROM FAN DISCHARGE UP TO ROOF HOOD.
- PROVIDE CANVAS CONNECTOR ON THE DISCHARGE OF FAN AND INSECT SCREEN ON INTAKE OF FAN.
- PROVIDE EF-1 AS AN CEILING MOUNTED INLINE EXHAUST FAN. 250CFM, .15 ESP, 208/1/60 .25HP MOTOR. BASED ON GREENHECK SP WITH A SOLID STATE SPEED CONTROLLER, UNIT MOUNTED DISCONNECT, AND INTEGRAL CEILING GRILLE
- SUSPEND FAN FROM ROOF TRUSS SYSTEM WITH MANUFACTURER AND ENGINEER APPROVED METHODS.

MAINTENANCE SHED MECHANICAL PLAN

SCALE: 1/4" = 1'-0"

ENGINEERS • ARCHITECTS • PLANNERS
DJG INC.
449 McLaws Circle, Williamsburg, VA 23185
Phone: 757.253.0673 Fax: 757.253.2319
Norfolk-Virginia Beach: 757.874.5015
www.djginc.com
COMMITTED TO EXCELLENCE

COMMONWEALTH OF VIRGINIA
KERRY PATRICK HERR
No. 041864
8-3-06
PROFESSIONAL ENGINEER

THIS DOCUMENT CONTAINS INFORMATION PROPRIETARY TO DJG, INC. AND IS FURNISHED IN CONFIDENCE AND AN AN INSTRUMENT OF SERVICE FOR THE LIMITED PURPOSE OF EVALUATION, BIDDING AND REVIEW, OR CONSTRUCTION OF A SPECIFIC PROJECT. REPRODUCTION OF THIS DOCUMENT, IN WHOLE OR IN PART, OR THE MODIFICATION OF ANY DETAIL OR DESIGN WITHOUT THE EXPRESSED, WRITTEN CONSENT OF DJG, INC. IS PROHIBITED. ALL RIGHTS RESERVED. COPYRIGHT (C) 2006.

REVISIONS

NO.	DATE	DESCRIPTION

MECHANICAL DETAILS AND CONTROL DIAGRAMS

VIRGINIA DEPARTMENT OF TRANSPORTATION
NEW KENT SAFETY REST AREA
AND INFORMATION CENTER
NEW KENT COUNTY, VIRGINIA

SCALE AS NOTED
DESIGNED KPH
DRAWN KPH
CHECKED KPH
DATE 8/3/06

COMMISSION NUMBER 2070030

SHEET NUMBER M5

P:\2070030\Mechanical\2070030M5.dwg, M5, 8/3/2006 2:43:48 PM

GEOTHERMAL WELL SYSTEM CONTROL SEQUENCE

THE LEAD GEOTHERMAL SYSTEM PUMP P-1A OR P-1B SHALL BE GRADUALLY BROUGHT UP TO SPEED OVER A 30 SECOND PERIOD AND SHALL RUN CONTINUOUSLY. IF THE LEAD PUMP SHOULD FAIL TO OPERATE, AN ALARM SHALL BE SENT TO THE DIGITAL CONTROLLER IDENTIFYING THE INOPERATIVE PUMP. THE LAG PUMP SHALL THEN BE STARTED AND GRADUALLY BROUGHT UP TO SPEED OVER A 30 SECOND PERIOD. THE PUMP SPEED SHALL BE VARIED BY THE VARIABLE FREQUENCY DRIVE (VFD) TO MAINTAIN THE REQUIRED DIFFERENTIAL PRESSURE IN THE PIPING SYSTEM, THROUGH A CONTROL SYSTEM INTERFACE WITH THE DRIVE. DURING LOW FLOW CONDITIONS, IF THE LEAD PUMP IS OPERATING AT MINIMUM SPEED (20Hz) AND THE SYSTEM DIFFERENTIAL PRESSURE EXCEEDS THE SET POINT BY MORE THAN 5 FEET OF HEAD, THE DIFFERENTIAL PRESSURE BYPASS VALVE SHALL BLEED WATER FROM THE SUPPLY MAIN TO THE RETURN MAIN IN AN AMOUNT PROPORTIONAL TO THE INCREASE IN DIFFERENTIAL PRESSURE IN THE MAIN TO PREVENT FURTHER PRESSURE BUILDUP. AS THE DIFFERENTIAL PRESSURE FALLS TOWARD SET POINT, THE DIFFERENTIAL PRESSURE CONTROL VALVE SHALL OPERATE IN THE REVERSE SEQUENCE. LOOP TUNING MUST BE DONE TO PREVENT OVER CYCLING (STROKING) OF THE CONTROL VALVE IN AN ATTEMPT TO OVER CONTROL THE SYSTEM PRESSURE.

ON SHUTDOWN OF EITHER PUMP, THE DIGITAL CONTROLLER SHALL CAUSE THE VFD TO SLOW THE PUMP DOWN TO 10% SPEED OVER 30 SECONDS BEFORE TAKING IT OFF-LINE. THE DIGITAL CONTROLLER SHALL RECORD THE NUMBER OF OPERATION HOURS OF ALL PUMPS AND RECORD THOSE HOURS FOR MAINTENANCE RECORDS. WHERE PUMPS OPERATE IN LEAD-LAG OPERATION, THE PUMPS SHALL AUTOMATICALLY SWITCH FROM LEAD TO LAG AND LAG TO LEAD AFTER EVERY 250 HOURS OPERATION AT MIDNIGHT, FOLLOWING REACHING 250 HRS. AT THE TIME OF SWITCHOVER FROM LEAD TO LAG PUMP OPERATION, THE DIGITAL CONTROLLER SHALL BROADCAST A SIGNAL OVER THE LAN TO ALL GROUND SOURCE HEAT PUMP TERMINAL UNITS TO DE-ENERGIZE THEIR REFRIGERATION COMPRESSOR FOR 2 MINUTES (AFTER WHICH NORMAL OPERATION SHALL RESUME) TO ALLOW THE PUMP CHANGEOVER TO OCCUR. A DIFFERENTIAL PRESSURE SWITCH INSTALLED ACROSS EACH PUMP SUCTION AND DISCHARGE SHALL SERVE TO PROVIDE PROOF THAT THE PUMP IS IN OPERATION. IF THE DIFFERENTIAL PRESSURE SENSOR INDICATES THAT THE PUMP IS NOT OPERATING WHEN COMMANDED ON BY THE DIGITAL CONTROLLER, AN ALARM SIGNAL SHALL BE SENT TO THE DIGITAL CONTROLLER. TEMPERATURE SENSORS SHALL BE INSTALLED AS SHOWN ON THE FLOW SCHEMATIC FOR THE PURPOSE OF MONITORING AND CONTROLLING THE GEOTHERMAL LOOP SYSTEM.

GEOTHERMAL (GEO-EXCHANGE) WATER LOOP:
REFER TO THE CONTROL GRAPHS FOR VALVE V-1

ON A RISE IN SYSTEM SUPPLY WATER TEMPERATURE ABOVE 50°F (ADJUSTABLE FOR ALL POINTS) AS SENSED BY SENSOR TS-3, THE DIGITAL CONTROLLER SHALL POSITION VALVE V-1 TO CIRCULATE ALL WATER THROUGH THE GEOTHERMAL WELL SYSTEM. ON A RISE IN SYSTEM SUPPLY WATER TEMPERATURE ABOVE 87°F (ADJUSTABLE) AS SENSED BY SENSOR TS-3, THE DIGITAL CONTROLLER SHALL POSITION VALVE V-1 TO CIRCULATE ALL WATER THROUGH THE GEOTHERMAL WELL SYSTEM.

ON A FALL IN SYSTEM WATER TEMPERATURE BELOW 75°F (ADJUSTABLE) AS SENSED BY SENSOR TS-3, THE DIGITAL CONTROLLER SHALL POSITION VALVE V-1 TO BY-PASS THE GEOTHERMAL WELL SYSTEM. ON A CONTINUED FALL IN THE LOOP TEMPERATURE TO 48øF OR LESS VALVE V-1 SHALL OPEN TO DIRECT WATER FLOW TO THE GEOTHERMAL WELL SYSTEM. ON A CONTINUED FALL IN WATER TEMPERATURE TO 30°F, AS SENSED BY TS-2, THE VFD SHALL RAMP UP TO FULL (100%) SPEED AND OPEN VALVE V-2 TO MAINTAIN SYSTEM PRESSURES WHILE THE PUMPS (P-1A OR P-1B) ARE OPERATING AT 100% FLOW CAPACITY. IF THE WATER TEMPERATURE CONTINUES TO FALL A COMMAND SHALL BE SENT FROM THE DDC SYSTEM TO DE-ENERGIZE ERU-1 AND A CRITICAL ALARM SENT TO THE OPERATORS WORK STATION.

THE DIFFERENTIAL BY-PASS VALVE SHALL BE SIZED, LOOP TUNED, AND OPERATED TO ALLOW FULL DESIGN FLOW TO THE GSHP'S WHEN THE GEOTHERMAL WELL FIELD HAS BEEN BY PASSED.

BORE SAMPLE SUBMITTAL
PROVIDE A FULL DEPTH BORE SAMPLE TO THE ENGINEER FOR REVIEW BEFORE FULL TIME GEOTHERMAL WELL DRILL ACTIVITIES ARE TO TAKE PLACE (MINIMUM 10 DAYS). BORE SAMPLE SHOULD BE DONE AS EARLY IN THIS CONSTRUCTION AS POSSIBLE AND BE ONE OF THE ACTUAL BORES TO BE USED IN THE GEOTHERMAL WELL FIELD.
REPORT SHALL INDICATE LOCATION OF BORE HOLE, SOIL TYPES ENCOUNTERED, DEPTH OF SOIL TYPES AND CONDUCTIVITY TESTING OF EACH.

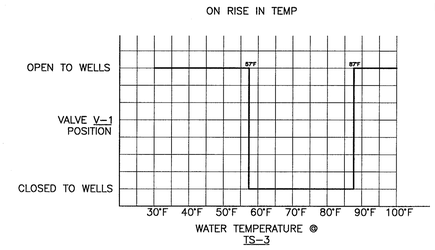

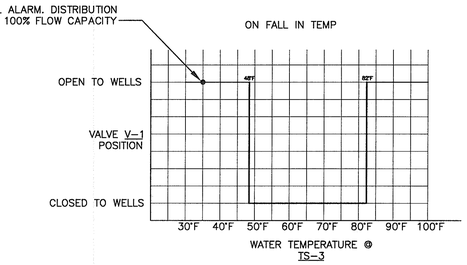

THIS BUILDING IS HEATED AND COOLED BY A GEOTHERMAL (GEO-EXCHANGE) SYSTEM. THE WELL FIELD DETAILS ARE;
* 28 VERTICAL WELLS
* EACH WELL IS 400' DEEP
* THE VERTICAL BORES ARE 4"ø
* WELL SPACING IS 18'
* REFER TO SPECIFICATION SECTION'S FOR GROUT TYPE
* REFER TO THE MECHANICAL AND CIVIL DRAWINGS FOR ADDITIONAL INFORMATION AND CLARIFICATION

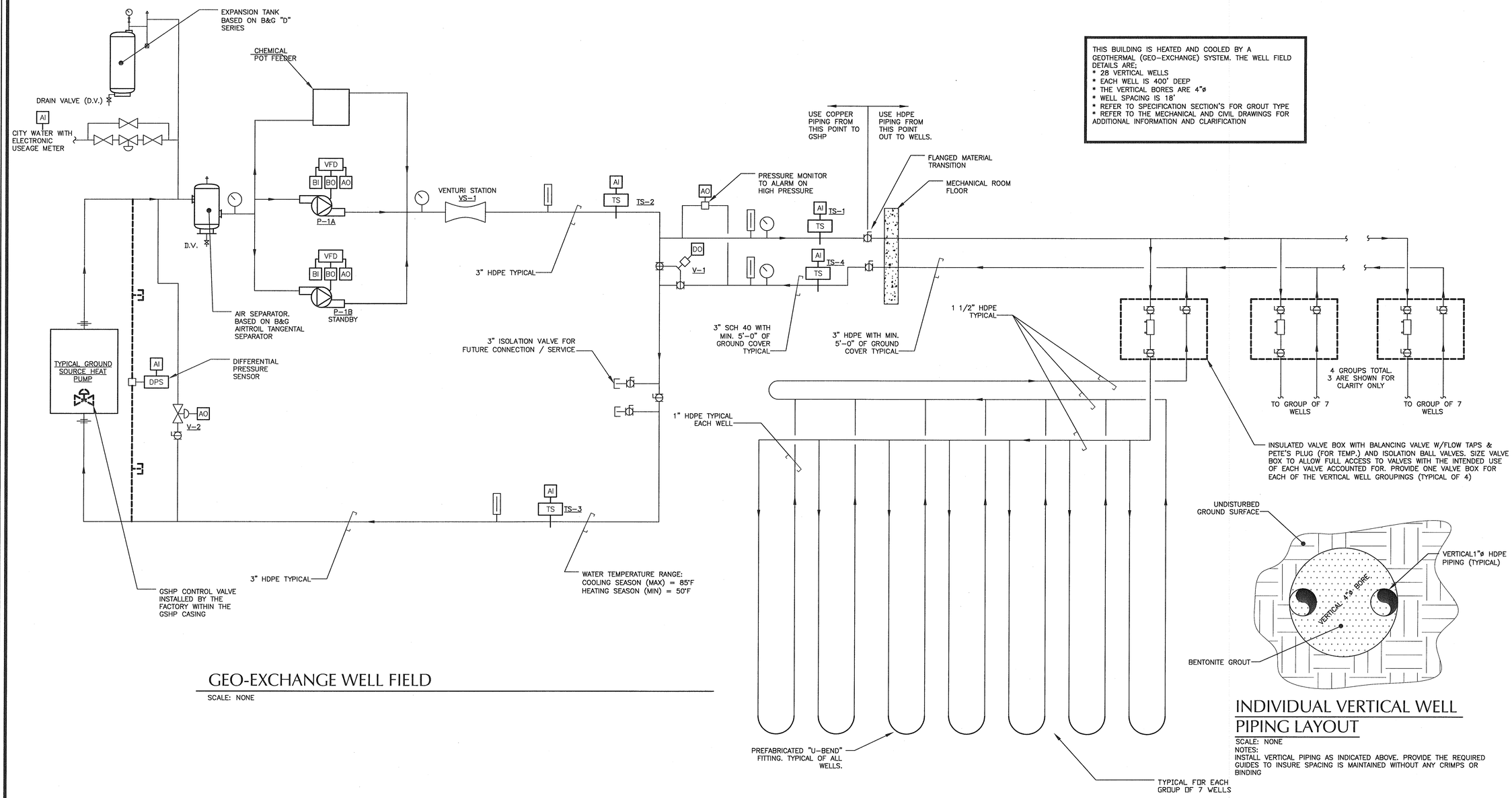

GEO-EXCHANGE WELL FIELD

SCALE: NONE

INDIVIDUAL VERTICAL WELL PIPING LAYOUT

SCALE: NONE
NOTES:
INSTALL VERTICAL PIPING AS INDICATED ABOVE. PROVIDE THE REQUIRED GUIDES TO INSURE SPACING IS MAINTAINED WITHOUT ANY CRIMPS OR BINDING

ENGINEERS • ARCHITECTS • PLANNERS
449 McLaws Circle, Williamsburg, VA 23185
Phone: 757.253.0873 Fax: 757.253.2319
Norfolk-Virginia Beach: 757.874.5015
www.dlginc.com
DLG INC.
COMMITTED TO EXCELLENCE

COMMONWEALTH OF VIRGINIA
KERRY PATRICK HERN
No. 041864
8-3-06
PROFESSIONAL ENGINEER

REVISIONS		
	DATE	DESCRIPTION

THIS DOCUMENT CONTAINS INFORMATION PROPRIETARY TO DLG, INC. AND IS FURNISHED IN CONFIDENCE, AS AN INSTRUMENT OF SERVICE, FOR THE LIMITED PURPOSE OF EVALUATION, BIDDING OR CONSTRUCTION WITH RESPECT TO THE PROJECT OR SITE IDENTIFIED HEREIN. IN WHOLE OR IN PART, OR THE MODIFICATION OF ANY DETAIL OR DESIGN WITHOUT THE EXPRESSED, WRITTEN CONSENT OF DLG, INC. IS PROHIBITED. COPYRIGHT (C) 2006.

MECHANICAL CONTROL AND FLOW DIAGRAMS

VIRGINIA DEPARTMENT OF TRANSPORTATION
NEW KENT SAFETY REST AREA AND INFORMATION CENTER
NEW KENT COUNTY, VIRGINIA

SCALE	DESIGNED	DRAWN	CHECKED	DATE
AS NOTED	KPH	KPH	KPH	8/3/06

COMMISSION NUMBER
2070030

SHEET NUMBER
M6

P:\2070030\Mechanical\2070030M6.dwg, M6, 8/3/2006 3:44:38 PM

ELECTRICAL LEGEND

- 1X4 FLUORESCENT LIGHTING FIXTURE
- 1X3 FLUORESCENT LIGHTING FIXTURE
- 1X2 FLUORESCENT LIGHTING FIXTURE
- RECESSED DOWN LIGHTING FIXTURE
- H.I.D. WALL MOUNTED FIXTURE
- DECORATIVE PENDANT LIGHTING FIXTURE
- BOLLARD LIGHTING FIXTURE
- INGRADE FLAG LIGHTING FIXTURE
- WALL MOUNTED ILLUMINATED EXIT SIGN. ARROWS WHEN SHOWN INDICATES DIRECTION
- CEILING MOUNTED ILLUMINATED EXIT SIGN. ARROWS WHEN SHOWN INDICATES DIRECTION
- H.I.D. POLE MOUNTED SITE LIGHTING FIXTURE
- A — LIGHTING FIXTURE TYPE SYMBOL; SEE LIGHTING FIXTURE SCHEDULE ON SHEET E3
- 70 — DESIGNED FOOT-CANDLE LEVEL
- P — PHOTOCELL
- S — SINGLE-POLE LIGHT SWITCH. MOUNT 48" AFF UON
- S_3 — THREE-WAY LIGHT SWITCH. MOUNT 48" AFF UON
- S_x — SINGLE-POLE KEYED SWITCH. MOUNT 48" AFF UON
- 20A, 125V DUPLEX CONVENIENCE RECEPTACLE. MOUNT 18" AFF UON
- GFI — 20A, 125VAC DUPLEX CONVENIENCE RECEPTACLE. "GFI" WHEN SHOWN, INDICATES INTEGRAL GROUND FAULT PROTECTION; MOUNT 8" ABOVE COUNTERTOP UON
- WP — DUPLEX RECEPTACLE WITH INTEGRAL GROUND FAULT PROTECTION, 20A, 125VAC; "WP", WHEN SHOWN, INDICATES WEATHERPROOF ENCLOSURE; MOUNT 24" AFF OR AFG UON
- 20A, 125V DOUBLE DUPLEX CONVENIENCE RECEPTACLE. MOUNT 18" AFF UON
- FLOOR MOUNTED 20A, 125V DUPLEX CONVENIENCE RECEPTACLE
- A-1,3 — BRANCH CIRCUIT OR FEEDER WIRING IN CONDUIT, NO TICK MARKS INDICATE 2#12 CONDUCTORS AND 1#12 GROUND IN 1/2" CONDUIT UON. TICK MARKS, WHEN SHOWN, INDICATE NUMBER OF #12 CONDUCTORS IF OTHER THAN THREE; (1) INDICATES GROUND. CONDUIT LARGER THAN 1/2" AND WIRE LARGER THAN #12, SHALL BE AS INDICATED
- HOMERUNS TO PANEL. PANEL AND CIRCUIT DESIGNATIONS AS INDICATED
- 3P 60/40 3R,NF — DISCONNECT SWITCH, 240V IN NEMA-1 ENCLOSURE UON; 3P=No. OF POLES, 60 = SWITCH RATING, 40 = FUSE RATING; 3R INDICATES NEMA-3R ENCLOSURE; SN INDICATES SOLID NEUTRAL BAR; 4X INDICATES NEMA 4X STAINLESS STEEL ENCLOSURE; NF INDICATES NON-FUSIBLE; PROVIDE HEAVY-DUTY TYPE
- 30 T — GENERAL PURPOSE 208V △ PRIMARY-480Y/277V SECONDARY DRY-TYPE TRANSFORMER. KVA RATING AS INDICATED
- M — POWER COMPANY METERING EQUIPMENT
- C.T. — POWER COMPANY CURRENT TRANSFORMER CABINET
- E — ELECTRICAL EQUIPMENT CONNECTION
- WH — ELECTRICAL CONNECTION FOR INSTANTANEOUS WATER HEATER
- FV — ELECTRICAL CONNECTION FOR 120V-24V TRANSFORMER FOR FLUSH VALVES
- V — SATELLITE TV OUTLET MOUNTED 18" AFF UON. PROVIDE A 4"X4"X2 1/8" DEEP BOX WITH A RAISED SINGLE-GANG DEVICE RING AND A SINGLE RG-6U COAXIAL CONNECTOR WITH WHITE COVER PLATE
- TELEPHONE AND DATA OUTLET MOUNTED 18" AFF UON. PROVIDE A 4"X4"X2 1/8" DEEP BOX WITH A RAISED SINGLE-GANG DEVICE RING. PROVIDE THREE CATEGORY 5e MODULAR JACKS (ONE FOR TELEPHONE, TWO FOR DATA) WITH WHITE COVER PLATE
- P — TELEPHONE OUTLET FOR PAY PHONE MOUNTED TO SUIT EQUIPMENT (APPROX. 30" AFF). COORDINATE MOUNTING HEIGHT WITH EQUIPMENT PRIOR TO ROUGH IN. PROVIDE A 2"X4"X1 1/2" DEEP BOX FOR PAY PHONE
- C — CLOSED CIRCUIT TV OUTLET MOUNTED 18" AFF UON. PROVIDE A 4"X4"X2 1/8" DEEP BOX WITH A RAISED DOUBLE-GANG DEVICE RING AND THREE RG-6U COAXIAL CONNECTORS WITH WHITE COVER PLATE FOR SECURITY MONITORING SYSTEM
- SE — SECURITY SYSTEM CONTROL STATION
- C — CEILING MOUNTED COLOR CCTV CAMERA
- C — WALL MOUNTED COLOR CCTV CAMERA IN AN OUTDOOR ENVIRONMENTAL WEATHERPROOF ENCLOSURE
- B — ADA COMPLIANT EMERGENCY PHONE STATION TO ALERT CUSTODIAL STAFF, TALK-A-PHONE ETP-100E OR EQUAL. PROVIDE EMERGENCY PHONE WITH ADA SIGNAGE AND AUXILIARY INPUTS/OUTPUTS FOR 3-WAY COMMUNICATION.
- CONDUIT TURN UP
- CONDUIT TURN DOWN
- 1 — ELECTRICAL WORK NOTE
- 2 — ELECTRICAL RISER DIAGRAM NOTE

ABBREVIATIONS

AFF	ABOVE FINISHED FLOOR TO CENTERLINE OF DEVICE UON
AFG	ABOVE FINISHED GRADE TO CENTERLINE OF DEVICE UON
AHU	AIR HANDLING UNIT
BFG	BELOW FINISHED GRADE
BFF	BELOW FINISHED FLOOR
BLD.	BUILDING
C	CONDUIT
DISC.	DISCONNECT SWITCH
DDC	DIRECT DIGITAL CONTROL
EF	EXHAUST FAN
EMT	ELECTRICAL METALLIC TUBING
EQUIP.	EQUIPMENT
FLUOR.	FLUORESCENT
GEC	GROUNDING ELECTRODE CONDUCTOR
GND	GROUND
GSHP	GROUND SOURCE HEAT PUMP
HID	HIGH INTENSITY DISCHARGE
HP	HORSEPOWER
HPS	HIGH PRESSURE SODIUM
IMC	INTERMEDIATE METAL CONDUIT
KAIC	ONE-THOUSAND AMPERE INTERRUPTING CAPACITY SYMMETRICAL AT CIRCUIT BREAKER OPERATING VOLTAGE
KW	KILOWATT
MCB	MAIN CIRCUIT BREAKER
MH	METAL HALIDE
MLO	MAIN LUGS ONLY
NEC	NATIONAL ELECTRICAL CODE
PL	COMPACT FLUORESCENT
TYP	TYPICAL
UH	UNIT HEATER
UON	UNLESS OTHERWISE NOTED
V	VOLTAGE, VOLTS
W	WIRE OR WATTS
W/	WITH
ø	PHASE

ELECTRICAL RISER DIAGRAM NOTES

1. 4-350 KCMIL AND 1#4 GROUND IN 2 1/2" CONDUIT.
2. 4#2/0 AND 1#6 GROUND IN 2" CONDUIT.
3. 4#4 AND 1#8 GROUND IN 1 1/4" CONDUIT.
4. 4#8 IN 1" CONDUIT.
5. 3#2 AND 1#8 GROUND IN 1 1/4" CONDUIT.
6. 2-3" CONDUITS EACH WITH 4-350 KCMIL.
7. 2-3" CONDUITS EACH WITH 4-350 KCMIL AND 1#1 GROUND.
8. 3-4" EMPTY CONDUITS EACH WITH PULL WIRE OR TAPE. COORDINATE WITH POWER COMPANY.
9. HEAVY DUTY 240V, 3-POLE, 600 AMP FUSED MAIN DISCONNECT SWITCH IN A NEMA 1 ENCLOSURE. PROVIDE SWITCH WITH SOLID NEUTRAL AND 600AMP, CLASS RK1 FAST-ACTING FUSES.
10. 600 AMP, 3-POLE, 208Y/120V THREE PHASE AUTOMATIC TRANSFER SWITCH.
11. #8 GEC IN 3/4" CONDUIT.
12. #2/0 GEC IN 3/4" CONDUIT.
13. 4#3/0 AND 1#6 GROUND IN 2 1/2" CONDUIT.
14. 3-3 1/2" CONDUITS EACH WITH 4-350 KCMIL AND 1#1 GROUND.

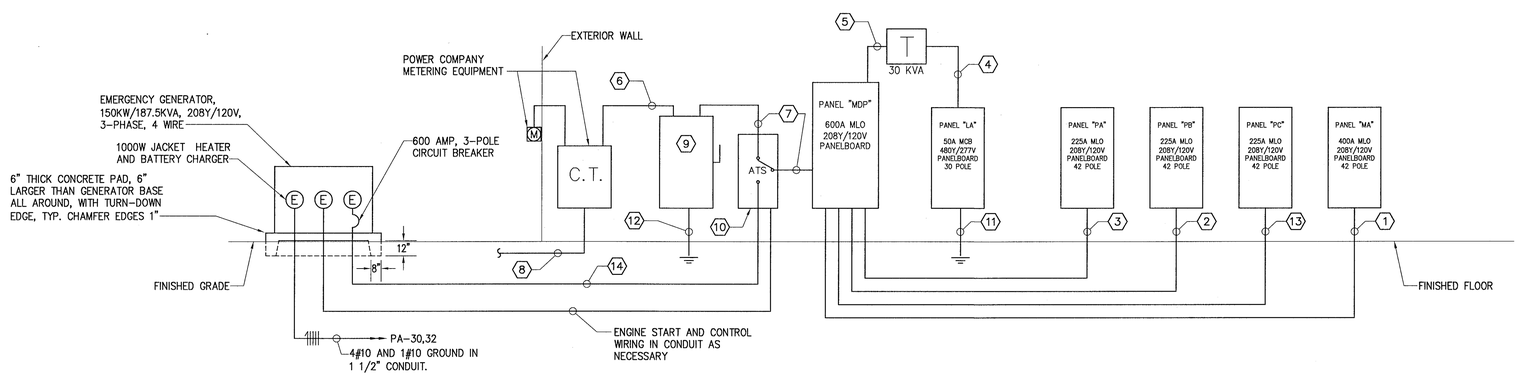

ELECTRICAL RISER DIAGRAM

NOT TO SCALE

ENGINEERS • ARCHITECTS • PLANNERS
449 McLaws Circle, Williamsburg, VA 23185
Phone: 757.253.0673 Fax: 757.253.2319
Norfolk-Virginia Beach: 757.874.5015
www.dgiinc.com
DGI INC.
COMMITTED TO EXCELLENCE

COMMONWEALTH OF VIRGINIA
JOSEPH ADAM MICKIEWICZ
No. 38698
8/3/06
PROFESSIONAL ENGINEER

THIS DOCUMENT CONTAINS INFORMATION PROPRIETARY TO D.G.I., INC. AND IS FURNISHED IN CONFIDENCE FOR THE LIMITED PURPOSE OF REVIEW AND REVIEW OR CONSTRUCTION OF A SPECIFIC PROJECT. REPRODUCTION OF THIS DOCUMENT, IN WHOLE OR IN PART, OR ANY INFORMATION CONTAINED HEREIN, IS PROHIBITED WITHOUT THE WRITTEN CONSENT OF D.G.I., INC. IS PROHIBITED. ALL RIGHTS RESERVED. COPYRIGHT (C) 2006.

REVISIONS

DATE	DESCRIPTION

ELECTRICAL LEGEND AND RISER DIAGRAM

VIRGINIA DEPARTMENT OF TRANSPORTATION
NEW KENT SAFETY REST AREA
AND INFORMATION CENTER
NEW KENT COUNTY, VIRGINIA

SCALE	DESIGNED	DRAWN	CHECKED	DATE
AS NOTED	DWR	LDP	JAM	8/3/06

COMMISSION NUMBER
2070030

SHEET NUMBER
E1

ELECTRICAL WORK NOTES (THIS SHEET ONLY)

1. 3-4" EMPTY SCHEDULE 40 PVC CONDUITS WITH PULL WIRE OR TAPE. DIRECTLY BURY CONDUITS 24" BFG MINIMUM. COORDINATE EXACT ROUTING OF CONDUITS AND DETAILS WITH DATA/COMM PROVIDER. CAP ENDS OF CONDUITS.
2. 3-4" EMPTY SCHEDULE 40 PVC CONDUITS WITH PULL WIRE OR TAPE. DIRECTLY BURY CONDUITS 24" BFG MINIMUM. COORDINATE EXACT ROUTING OF CONDUITS AND DETAILS WITH POWER COMPANY. CAP ENDS OF CONDUITS.
3. 3-3 1/2" SCHEDULE 40 PVC CONDUITS. DIRECTLY BURY CONDUITS 24" BFG MINIMUM. PROVIDE CONDUCTORS IN CONDUIT AS INDICATED ON ELECTRICAL RISER DIAGRAM ON SHEET E1 FOR STANDBY GENERATOR FEEDER.
4. 24"X24"X12" DEEP OPEN BOTTOM POLYMER CONCRETE PULL BOX WITH COVER. PROVIDE 12" DEEP #78 STONE BASE, HAND TAMP AT 6" LIFTS AND EXTEND 12" FROM ALL SIDES OF BOX.
5. 2-1" EMPTY SCHEDULE 40 PVC CONDUITS WITH PULL WIRE OR TAPE FOR FUTURE SITE LIGHTING CIRCUITS FROM LIGHTING CONTACTOR B. DIRECTLY BURY CONDUITS 24" BFG MINIMUM. STUB OUT 5' BEYOND SIDEWALK MINIMUM AND CAP.
6. PROVIDE JUNCTION BOX ADJACENT TO LIGHTING CONTACTOR. TIE HOMERUNS TOGETHER HERE AND EXTEND A SINGLE SET OF CONDUCTORS TO LIGHTING CONTACTOR. SEE PHOTOCELL-CONTACTOR DETAIL ON SHEET E7. PROVIDE 2#10 AND 1#10 GROUND IN 1" SCHEDULE 40 PVC CONDUIT TYPICAL OF CIRCUIT.
7. COORDINATE EXACT LOCATION AND AIMING WITH OWNER PRIOR TO ROUGH-IN. SEE SITE FLAG LIGHTING DETAIL ON THIS SHEET.
8. RAINWATER COLLECTION SYSTEM CONTROL PANEL FOR TWO 2HP 208V, 3ø ALTERNATING PUMPS.

GENERAL WORK NOTES

1. PROVIDE 1" MINIMUM SCHEDULE 40 PVC CONDUIT BURIED 24" MINIMUM BFG FOR ALL EXTERIOR CONDUITS UON.
2. THE SITE LIGHTING IS BROKEN INTO NINE SUBSECTIONS: ENTRANCE, TRUCK PARKING, CAR PARKING, EAST SIDEWALKS & PICNIC AREAS, WEST SIDEWALKS & PICNIC AREAS, PLAZA, THE SIDEWALK NORTH OF CAR PARKING, THE SIDEWALK SOUTH OF CAR PARKING, AND THE SIDEWALK SOUTH OF TRUCK PARKING. SITE LIGHTING FIXTURES SHALL PROVIDE AN AVERAGE TO MINIMUM UNIFORMITY RATIO OF 4:1 OR BETTER IN EACH OF THESE AREAS.
3. PROVIDE TRACER WIRE AND WARNING IDENTIFICATION TAPE IN TRENCHES WITH ALL UNDERGROUND, NON-METALLIC CONDUITS. TRACER WIRE AND TAPE SHALL BE FURNISHED AND INSTALLED IN ACCORDANCE WITH THE PROVISIONS OF SPECIFICATIONS SECTION 02531.
4. INSTALL ALL UNDERGROUND CONDUITS IN ACCORDANCE WITH SPECIFICATION SECTIONS 02315 AND 02531.

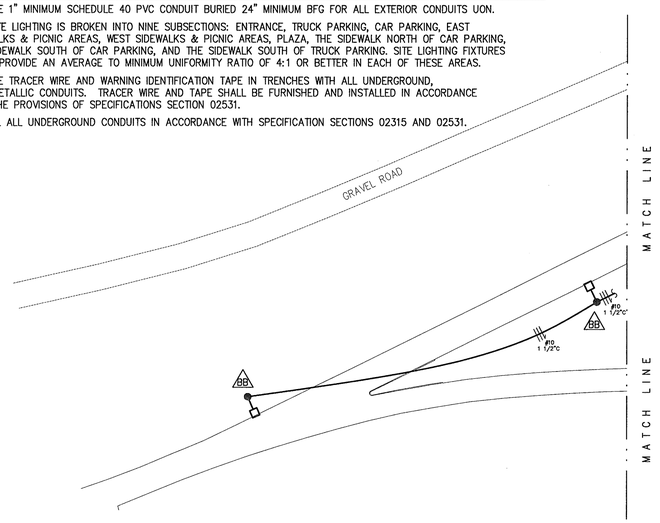

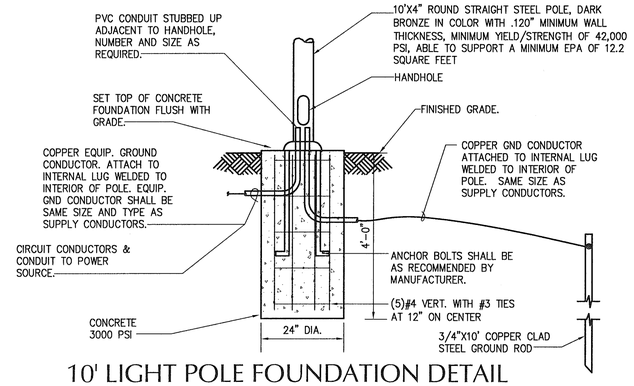

10' LIGHT POLE FOUNDATION DETAIL

NOT TO SCALE

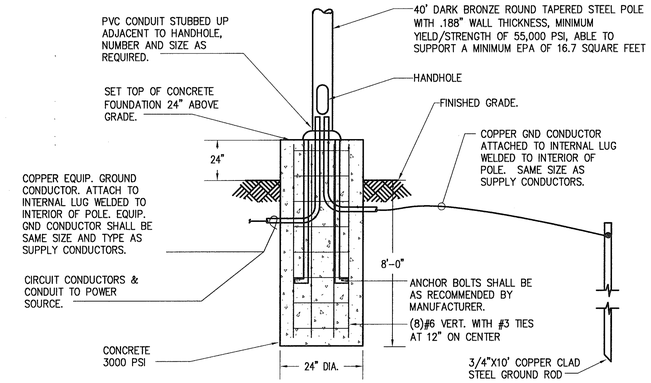

40' LIGHT POLE FOUNDATION DETAIL

NOT TO SCALE

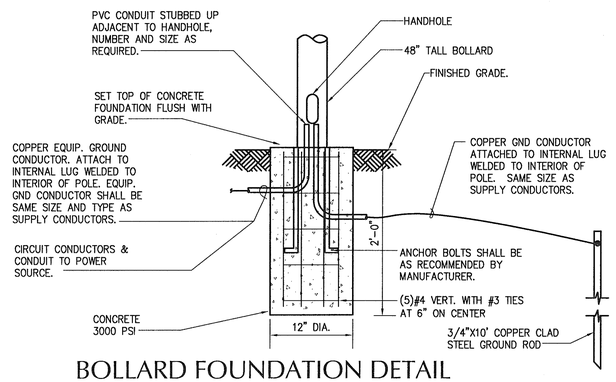

BOLLARD FOUNDATION DETAIL

NOT TO SCALE

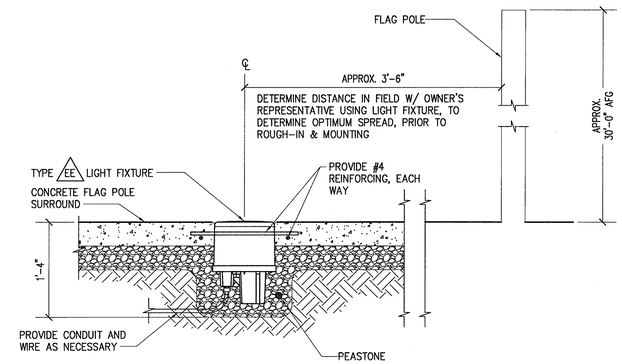

SITE FLAG LIGHTING DETAIL - TYPE "EE"

NOT TO SCALE

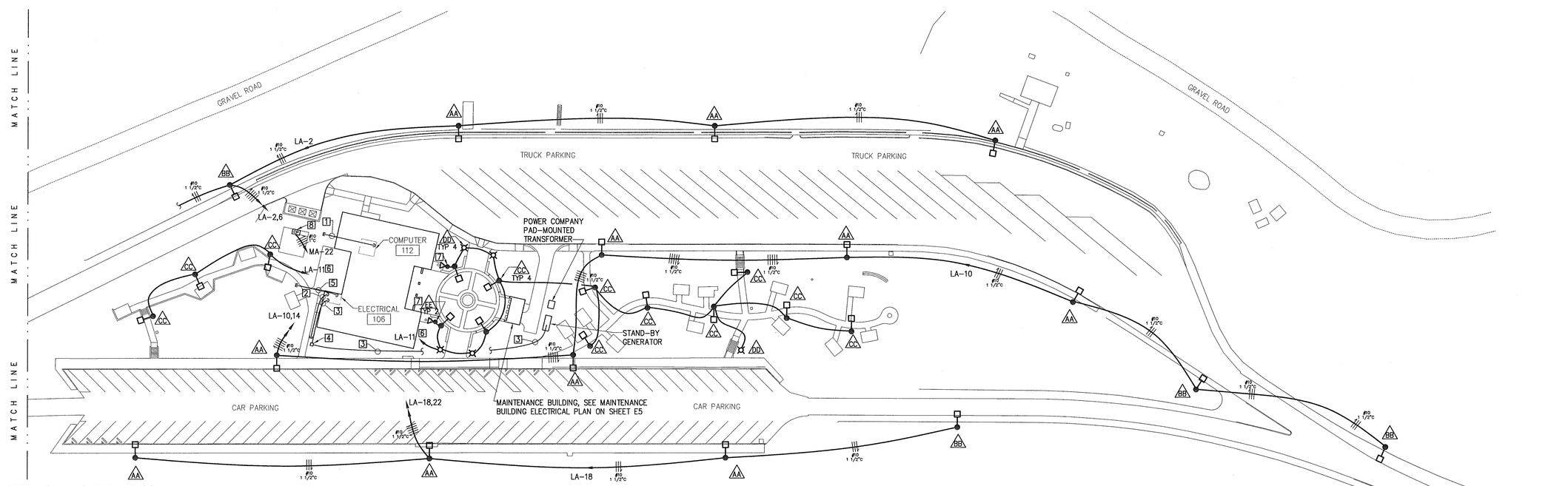

NORTH

ELECTRICAL SITE PLAN

SCALE: 1" = 50'

GRAPHIC SCALE

50' 0' 50' 100'

SCALE: 1" = 50'

ENGINEERS • ARCHITECTS • PLANNERS

449 McLaws Circle, Williamsburg, VA 23185
Phone: 757.253.0673 Fax: 757.253.2319
Norfolk-Virginia Beach: 757.874.5015
www.dgjinc.com

DGJ INC.

COMMITTED TO EXCELLENCE

COMMONWEALTH OF VIRGINIA
JOSEPH L. PIDDIT
No. 38988
8/4/06
PROFESSIONAL ENGINEER

REVISIONS

DATE	DESCRIPTION

THIS DOCUMENT CONTAINS INFORMATION PROPRIETARY TO D.G.J., INC., AND IS FURNISHED IN CONFIDENCE FOR THE LIMITED PURPOSE OF REVIEW IN CONNECTION WITH THE PREPARATION AND REVIEW, OR CONSTRUCTION, OF A SPECIFIC PROJECT. REPRODUCTION OF THIS DOCUMENT, IN WHOLE OR IN PART, OR THE DISCLOSURE OF ITS CONTENTS TO OTHERS WITHOUT THE WRITTEN CONSENT OF D.G.J., INC., IS PROHIBITED. ALL RIGHTS RESERVED. COPYRIGHT © YY.DDSSS.

ELECTRICAL SITE PLAN

VIRGINIA DEPARTMENT OF TRANSPORTATION
NEW KENT SAFETY REST AREA AND INFORMATION CENTER
NEW KENT COUNTY, VIRGINIA

SCALE	DESIGNED	DRAWN	CHECKED	DATE
AS NOTED	DWR	LDP	JAM	8/3/06

COMMISSION NUMBER
2070030

SHEET NUMBER
E2

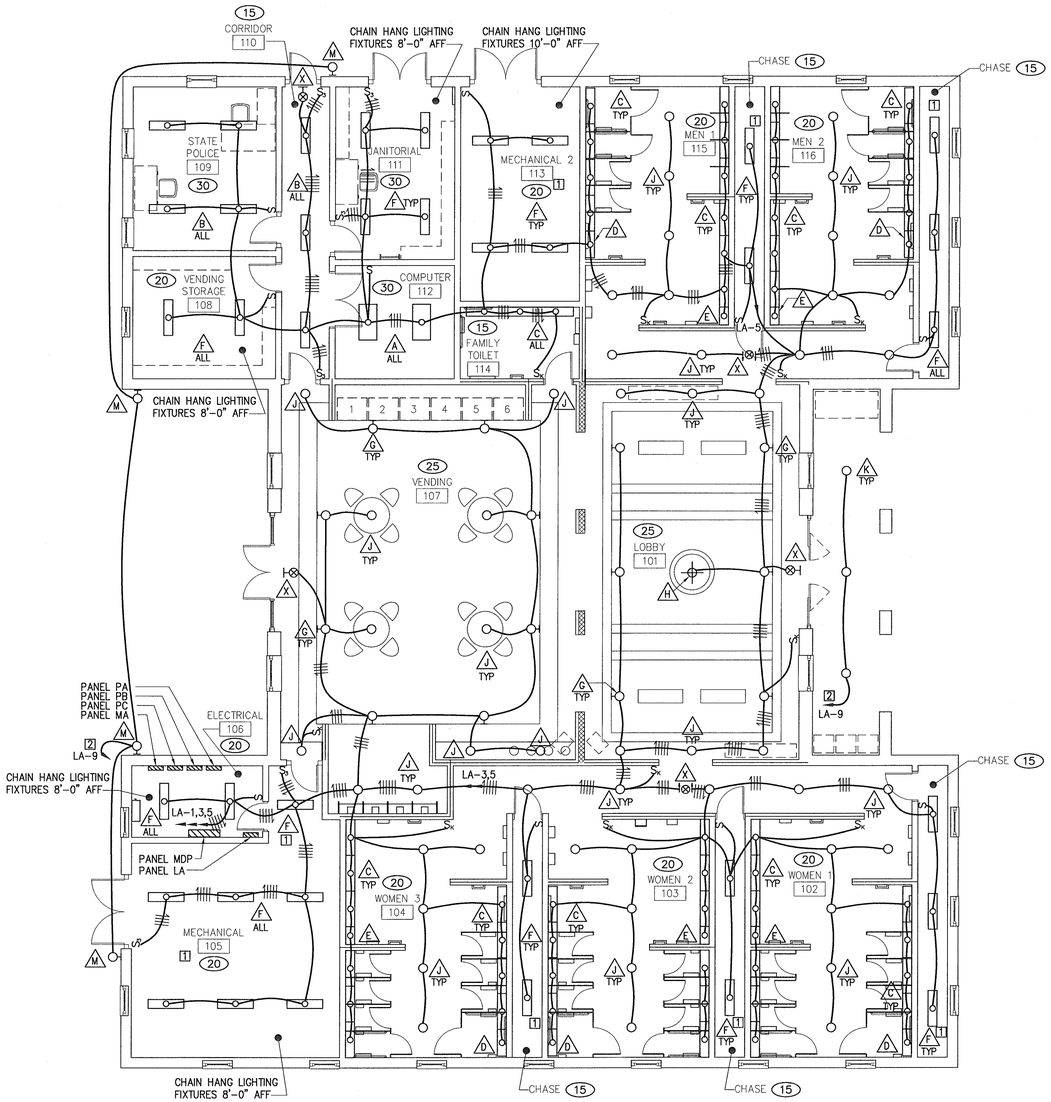

ELECTRICAL LIGHTING PLAN

NORTH **SCALE: 1/8" = 1'-0"**

ELECTRICAL WORK NOTES (THIS SHEET ONLY)

1. COORDINATE LOCATION OF LIGHTING FIXTURES WITH MECHANICAL DUCTWORK, PIPING, AND EQUIPMENT IN THIS AREA.
2. PROVIDE JUNCTION BOX ADJACENT TO LIGHTING CONTACTOR. TIE HOMERUNS TOGETHER HERE AND EXTEND A SINGLE SET OF CONDUCTORS TO LIGHTING CONTACTOR. SEE PHOTOCELL-CONTACTOR DETAIL ON SHEET E7.

LIGHTING FIXTURE SCHEDULE

MARK	MANUFACTURER	CATALOG NO.	VOLTS	LAMPS	MOUNTING	NOTES
A	DAY-BRITE	2DPG232-FS01-277-1/2-EB	277	2-32W T8 FLUOR	RECESSED	1
	COLUMBIA	4PS-24-232G-FSA12-EB8277				
	LITHONIA	2SP8-G-232-A12-277-GEB				
B	DAY-BRITE	CAN232-277-1/2-EB	277	2-32W T8 FLUOR	SURFACE MOUNTED	1
	COLUMBIA	WC4-232-EB8277				
	METALUX	WS-232A-277V-EB81				
C	ICON	WW-5612/0/4/EBRS-277V	277	1-32W T8 FLUOR	RECESSED	1
	LITE CONTROL	2014T8-CWM-ELB-277-PR				
	DAY-O-LITE	PNR 9-132T8-F-4-W-277V				
D	ICON	WW-5612/0/3/EBRS-277V	277	1-25W T8 FLUOR	RECESSED	1
	LITE CONTROL	2013T8-CWM-ELB-277-PR				
	DAY-O-LITE	PNR 9-125T8-F-3-W-277V				
E	ICON	WW-5612/0/2/EBRS-277V	277	1-17W T8 FLUOR	RECESSED	1
	LITE CONTROL	2012T8-CWM-ELB-277-PR				
	DAY-O-LITE	PNR 9-117T8-F-2-W-277V				
F	DAY-BRITE	V2WAB232-277	277	2-32W T8 FLUOR	SURFACE, UON	1
	COLUMBIA	LUN4-232-EB8277				
	LITHONIA	DMW232-AR-277GEB-WLF				
G	ELIPTIPAR	M402-150G-W-02-B-V00	277	1-150W CERAMIC MH	WALL MOUNT 10'-0" AFF	--
	LAM	H-AA106-WM-I-150MHDE-SCW-277V-V				
	PINNACLE	PS-M150G-Y1-2-W-V				
H	SPI ADVENT	AIP2142-4F39-PBR-277V	277	4-40W PL	PENDANT MOUNT 9'-6" AFF	1
	LAM	LDL41-4/40-A-A-RB-31"-BR-277				
	VISA	CP3274-4F40(277V)-PB-OAH39"-FINIAL				
J	OMEGA	OM61H260PL-PW-120/277	277	1-26W PL	RECESSED	1
	PRESCOLITE	CFR6126EB-ST374A1				
	GOTHAM	AF 1/26DTT 6PR 277 GEB10				
K	OMEGA	OM850ED23HS-PW-120/277	120/277	50W HPS	RECESSED	3
	PRESCOLITE	RHD801-50HPS-STH804				
	GOTHAM	AH-50S-8PR-277				
M	AAL	M2WD-H3-100HPS-VRL-DBZ	277	100W HPS	WALL MOUNT TOP OF FIXTURE 10'-0" AFF	3
	BEGA	2496S-DARK BRONZE-277V				
	LUMINIS	W900-H100-BZT-277				
X	MCPHILBEN	CXXL3RW	277	LED	WALL MOUNT 7'-6" AFF OR SURFACE CEILING	2
	DUAL-LITE	LXURWE-I				
	LITHONIA	LQM-S-W-3-R-120/277-EL N-SD				
AA	GARDCO	H26-1-FM-1000HPS-QUAD-BRA	480	1000W HPS	POLE MOUNT 40' AFG	3,6
BB	GARDCO	EH19-1-3-400HPS-QUAD-BRA	480	400W HPS	POLE MOUNT 40' AFG	3,6
CC	AAL	M2P-H3-100HPS-VRL-DBZ	277	100W HPS	POLE MOUNT 10' AFG	3,6
DD	AAL	M4-CF-42W-DBZ	277	42W, PL	BOLLARD 48" TALL	3,4,5,6
EE	KIM	LTV750-PR-70MH277	277	70W PAR MH, 15' SPOT	FLUSH MOUNT IN CONCRETE, SEE NOTE 7 ON E2	3,6

NOTES:
1. FIXTURE SHALL HAVE SOLID-STATE ELECTRONIC, RAPID START, NORMAL LIGHT OUTPUT BALLASTS AND 3,500°K PHOSPHOR, FLUORESCENT LAMPS.
2. PROVIDE FIXTURE WITH BATTERY BACKUP. CONNECT BATTERY AHEAD OF LOCAL SWITCHING.
3. CONNECT FIXTURE TO LIGHTING CONTACTOR. SEE DETAIL ON SHEET E7.
4. FIXTURE SHALL HAVE SOLID-STATE ELECTRONIC, 0°F STARTING, NORMAL LIGHT OUTPUT BALLASTS AND 2,700°K PHOSPHOR, FLUORESCENT LAMPS.
5. MOUNT BOLLARD PER MANUFACTURER'S RECOMMENDATIONS.
6. SEE DETAIL ON SHEET E2.

GRAPHIC SCALE
0 4 8 12 16 20 24
SCALE: 1/8" = 1'-0"

ENGINEERS • ARCHITECTS • PLANNERS
449 McLaws Circle, Williamsburg, VA 23185
Phone: 757.253.0673 Fax: 757.253.2319
Norfolk-Virginia Beach: 757.874.5015
www.djginc.com
DJG INC.
COMMITTED TO EXCELLENCE

COMMONWEALTH OF VIRGINIA
JOSEPH ADAM MCKEVERCZ
No. 38888
8/3/06
PROFESSIONAL ENGINEER

THIS DOCUMENT CONTAINS INFORMATION PROPRIETARY TO DJG, INC. AND IS FURNISHED IN CONFIDENCE AND SUBJECT TO THE RESTRICTION THAT IT BE USED FOR REFERENCE AND REVIEW OF CONSTRUCTION OF A SPECIFIC PROJECT. REPRODUCTION OF THIS DOCUMENT, IN WHOLE OR IN PART, OR ANY INFORMATION CONTAINED THEREIN, WITHOUT THE WRITTEN CONSENT OF DJG, INC. IS PROHIBITED. ALL RIGHTS RESERVED. COPYRIGHT (C) 2006.

REVISIONS

NO.	DATE	DESCRIPTION

ELECTRICAL LIGHTING PLAN

VIRGINIA DEPARTMENT OF TRANSPORTATION
NEW KENT SAFETY REST AREA AND INFORMATION CENTER
NEW KENT COUNTY, VIRGINIA

SCALE	DESIGNED	DRAWN	CHECKED	DATE
AS NOTED	DWR	LDP	JAM	8/3/06

COMMISSION NUMBER **2070030**

SHEET NUMBER **E3**

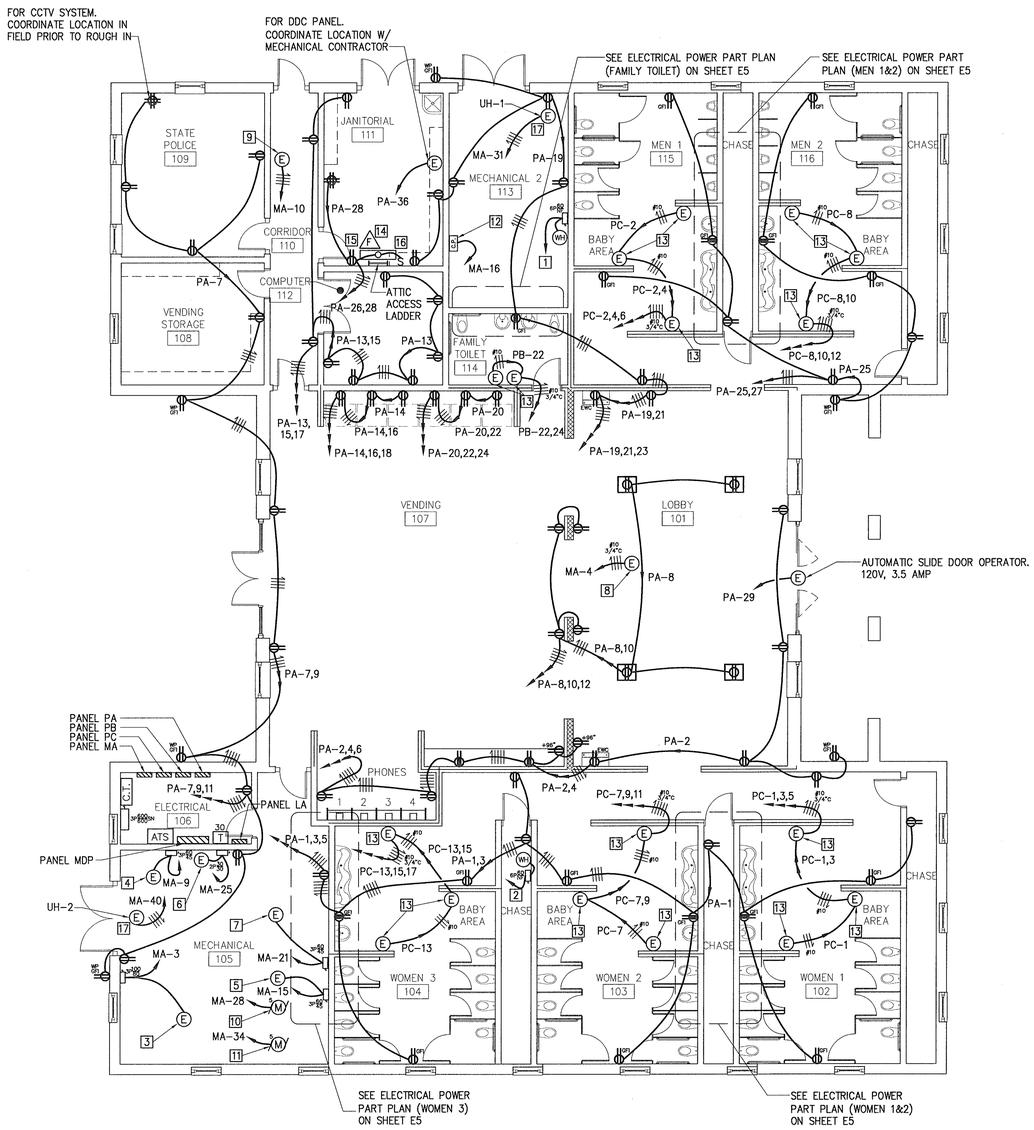

NORTH

ELECTRICAL POWER PLAN

SCALE: 1/8" = 1'-0"

ELECTRICAL WORK NOTES (THIS SHEET ONLY)

1. 20KW INSTANTANEOUS WATER HEATER. SERVE WATER HEATER FROM THREE 208V 1ø CIRCUITS (PC-19,23,27) EACH WITH 2#8 AND 1#10 GND IN 3/4" CONDUIT.
2. 20KW INSTANTANEOUS WATER HEATER. SERVE WATER HEATER FROM THREE 208V 1ø CIRCUITS (PB-1,5,9) EACH WITH 2#8 AND 1#10 GND IN 3/4" CONDUIT.
3. ERU-1, 208V 3ø WITH INTEGRAL CONTROLS, 62.1 AMPS. SERVE UNIT WITH 3#4 AND 1#8 GROUND IN 1 1/4" CONDUIT.
4. GSHP-1, 208V 3ø WITH INTEGRAL CONTROLS, 27.5 AMPS. SERVE UNIT WITH 3#8 AND 1#10 GROUND IN 3/4" CONDUIT.
5. GSHP-2, 208V 3ø WITH INTEGRAL CONTROLS, 27.5 AMPS. SERVE UNIT WITH 3#8 AND 1#10 GROUND IN 3/4" CONDUIT.
6. GSHP-3, 208V 1ø WITH INTEGRAL CONTROLS, 17.8 AMPS. SERVE UNIT WITH 2#10 AND 1#10 GROUND IN 3/4" CONDUIT.
7. GSHP-4, 208V 3ø WITH INTEGRAL CONTROLS, 27.5 AMPS. SERVE UNIT WITH 3#8 AND 1#10 GROUND IN 3/4" CONDUIT.
8. EDH-1, 6 KW, 208V 3ø, WITH UNIT DISCONNECT.
9. EDH-2, 2 KW, 208V 3ø, WITH UNIT DISCONNECT.
10. P-1A, 5HP, 208V 3ø, PUMP WITH VARIABLE FREQUENCY DRIVE FOR GEOTHERMAL WELL SYSTEM. VARIABLE FREQUENCY DRIVE SHALL BE FURNISHED BY MECHANICAL CONTRACTOR, INSTALLED BY ELECTRICAL CONTRACTOR ADJACENT TO PUMP. SERVE PUMP WITH 3#10 AND 1#10 GROUND IN 3/4" CONDUIT.
11. P-1B, 5HP, 208V 3ø, PUMP WITH VARIABLE FREQUENCY DRIVE FOR GEOTHERMAL WELL SYSTEM. VARIABLE FREQUENCY DRIVE SHALL BE FURNISHED BY MECHANICAL CONTRACTOR, INSTALLED BY ELECTRICAL CONTRACTOR ADJACENT TO PUMP. SERVE PUMP WITH 3#10 AND 1#10 GROUND IN 3/4" CONDUIT.
12. CONTROL PANEL FOR TOILET FLUSH SYSTEM. TWO 5HP, 208V 3ø PUMPS. SERVE CONTROL PANEL WITH 3#8 AND 1#10 GROUND IN 3/4" CONDUIT.
13. ELECTRICAL CONNECTION FOR RECESSED HAND DRYER, 120V 2.3KW, 19.0 AMPS.
14. CHAIN HANG LIGHTING FIXTURE FROM ROOF STRUCTURE 7'-0" ABOVE ATTIC FLOOR. PROVIDE FIXTURE WITH 120V BALLAST.
15. LOCATE RECEPTACLE IN ATTIC ADJACENT TO LADDER.
16. LOCATE LIGHT SWITCH IN ATTIC ADJACENT TO LADDER.
17. UNIT HEATER, 3KW, 208V 3ø, WITH UNIT DISCONNECT AND CONTROLS.

GRAPHIC SCALE

0 4 8 12 16 20 24

SCALE: 1/8" = 1'-0"

ENGINEERS • ARCHITECTS • PLANNERS

DUO, INC.

448 McLaws Circle, Williamsburg, VA 23185
Phone: 757.253.0073 Fax: 757.253.2319
Norfolk, Virginia Beach: 757.314.5015
www.duoinc.com

COMMITTED TO EXCELLENCE

COMMONWEALTH OF VIRGINIA
JOSEPH ADAM MICKIEWICZ
No. 38888
9/3/06
PROFESSIONAL ENGINEER

REVISIONS

DATE	DESCRIPTION

THIS DOCUMENT CONTAINS INFORMATION PROPRIETARY TO DUO, INC. AND IS FURNISHED IN CONFIDENCE AS AN INSTRUMENT OF SERVICE FOR THE USE OF THE OWNER IN CONNECTION WITH THE PROJECT. ANY USE, REPRODUCTION OR DISCLOSURE OF ANY ASPECT OF THIS DOCUMENT, IN WHOLE OR IN PART, FOR ANY PURPOSE OTHER THAN THE PROJECT, WITHOUT THE WRITTEN CONSENT OF DUO, INC. IS PROHIBITED. ALL RIGHTS RESERVED. COPYRIGHT © 2006.

ELECTRICAL POWER PLAN

VIRGINIA DEPARTMENT OF TRANSPORTATION
NEW KENT SAFETY REST AREA AND INFORMATION CENTER
NEW KENT COUNTY, VIRGINIA

SCALE	DESIGNED	DRAWN	CHECKED	DATE
AS NOTED	DWR	LJP	JAM	8/3/06

COMMISSION NUMBER
2070030

SHEET NUMBER
E4

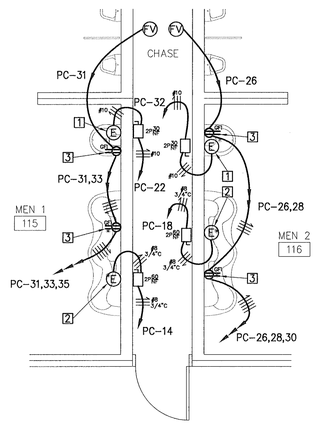

NORTH

ELECTRICAL POWER PART PLAN (MEN 1&2)

SCALE: 1/4" = 1'-0"

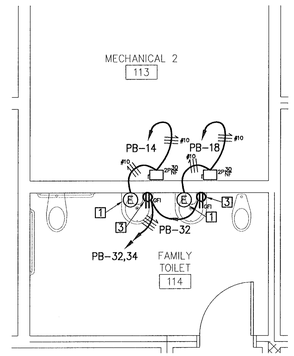

NORTH

ELECTRICAL POWER PART PLAN (FAMILY TOILET)

SCALE: 1/4" = 1'-0"

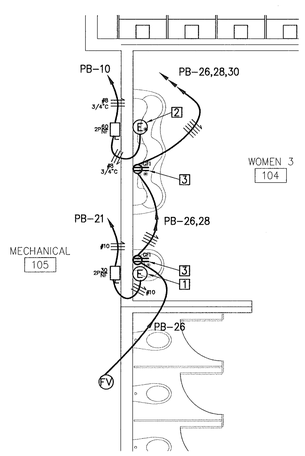

NORTH

ELECTRICAL POWER PART PLAN (WOMEN 3)

SCALE: 1/4" = 1'-0"

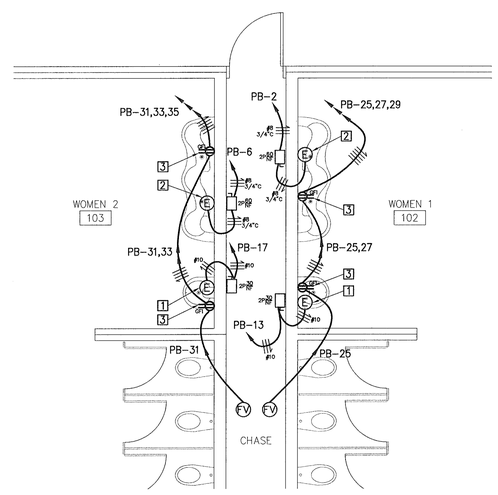

NORTH

ELECTRICAL POWER PART PLAN (WOMEN 1&2)

SCALE: 1/4" = 1'-0"

ELECTRICAL WORK NOTES (THIS SHEET ONLY)

1. ELECTRICAL CONNECTION FOR SINGLE SINK 4.1KW INSTANTANEOUS WATER HEATER, 208V 1ø, 20.0 AMPS.
2. ELECTRICAL CONNECTION FOR THREE SINK 7.1KW INSTANTANEOUS WATER HEATER, 208V 1ø, 35.0 AMPS.
3. MOUNT RECEPTACLE UNDER SINK TO SUIT SINK SENSOR.
4. NETWORK INTERFACE DEVICE (NID). PROVIDE EMPTY 1" SCHEDULE 80 PVC CONDUIT FROM NID DOWN AND EXTEND BELOW GRADE 5' FROM MAINTENANCE BUILDING. CAP 24" BELOW FINISHED GRADE MINIMUM. COORDINATE WORK WITH TELEPHONE PROVIDER.
5. PROVIDE DISCONNECT SWITCH WITH INSULATED NEUTRAL BUS. CONNECT 1#6 GEC TO EQUIPMENT GROUND BUS IN DISCONNECT SWITCH AND ROUTE IN 3/4" CONDUIT AND CONNECT TO A 3/4" X 10' COPPER-CLAD STEEL GROUND ROD. DRIVE GROUND ROD IN AN ACCESSIBLE LOCATION, IN EARTH 2'-0" FROM EXTERIOR WALL OF BUILDING OR IN COMPUTER ROOM.

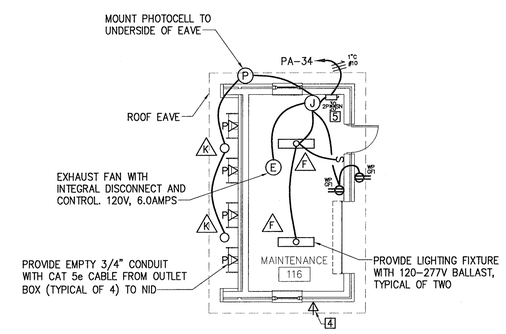

NORTH

MAINTENANCE BUILDING

SCALE: 1/8" = 1'-0"

GRAPHIC SCALE

0 4 8 12 16 20 24

SCALE: 1/8" = 1'-0"

0 2 4 6 8 10 12

SCALE: 1/4" = 1'-0"

ENGINEERS • ARCHITECTS • PLANNERS
DJG INC.
449 McLaws Circle, Williamsburg, VA 23185
Phone: 757.253.0673 Fax: 757.253.2319
Norfolk-Virginia Beach: 757.874.5015
www.djginc.com
COMMITTED TO EXCELLENCE

COMMONWEALTH OF VIRGINIA
JOSEPH ADAM MICKIEWICZ
No. 38888
8/3/06
PROFESSIONAL ENGINEER

THIS DOCUMENT CONTAINS INFORMATION PROPRIETARY TO DJG, INC. AND IS FURNISHED IN CONFIDENCE AN AN INSTRUMENT OF SERVICE FOR THE LIMITED PURPOSE OF EVALUATION, BIDDING AND REVIEW, OR CONSTRUCTION OF A SPECIFIC PROJECT. REPRODUCTION OF THIS DOCUMENT, IN WHOLE OR IN PART, OR THE MODIFICATION OF ANY DETAIL OR DESIGN WITHOUT THE EXPRESSED, WRITTEN CONSENT OF DJG, INC. IS PROHIBITED. ALL RIGHTS RESERVED. COPYRIGHT (C) 2006.

REVISIONS

NO.	DATE	DESCRIPTION

ELECTRICAL POWER PART PLANS

VIRGINIA DEPARTMENT OF TRANSPORTATION
NEW KENT SAFETY REST AREA
AND INFORMATION CENTER
NEW KENT COUNTY, VIRGINIA

SCALE AS NOTED
DESIGNED DWR
DRAWN LDP
CHECKED JAM
DATE 8/3/06

COMMISSION NUMBER
2070030

SHEET NUMBER
E5

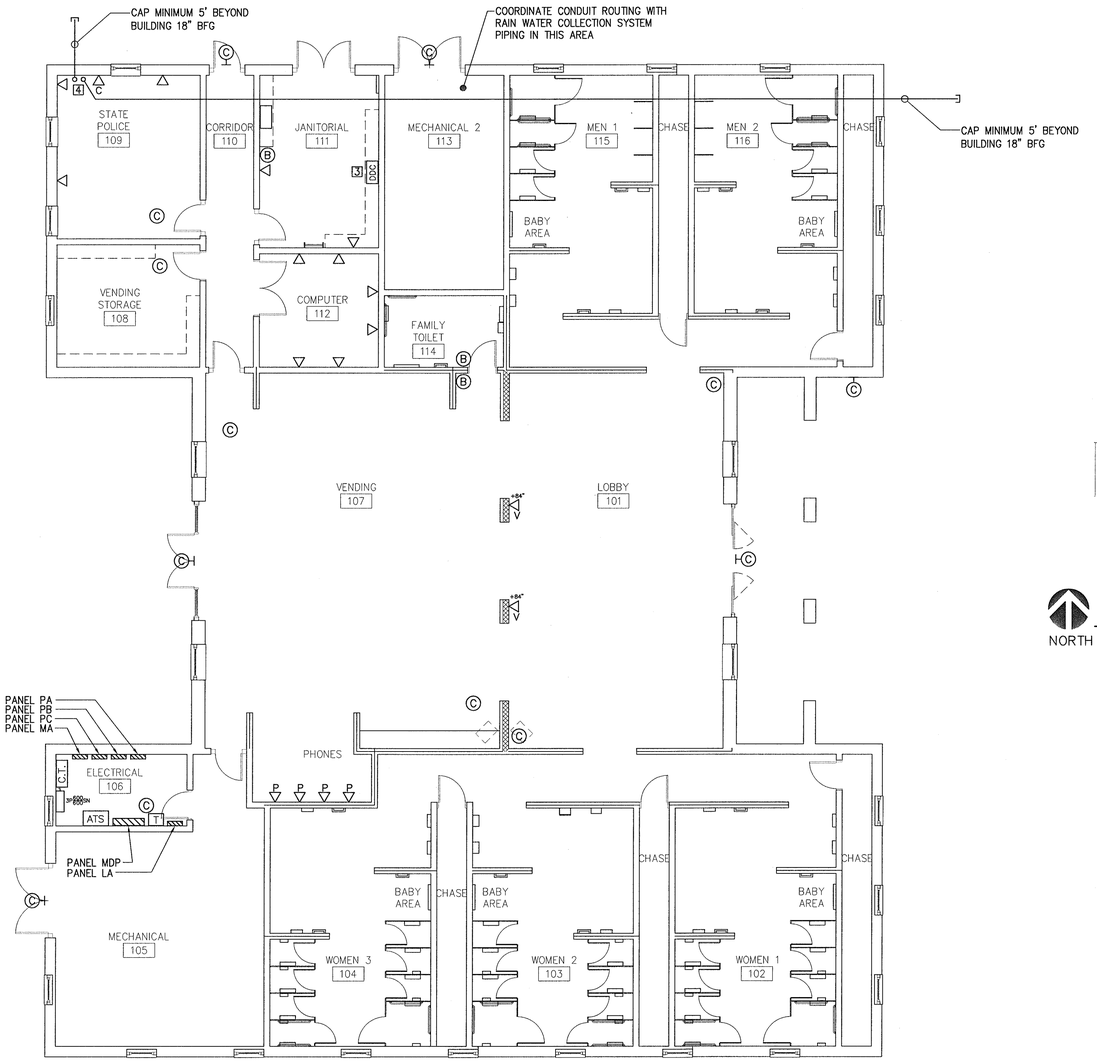

NORTH

ELECTRICAL SIGNAL PLAN

SCALE: 1/8" = 1'-0"

ELECTRICAL WORK NOTES (THIS SHEET ONLY)

1. CONNECT 1#2 GROUND BAR WHIP TO A 3/4" X 10' COPPER-CLAD STEEL GROUND ROD. INSTALL #2 WHIP IN 3/4" CONDUIT. DRIVE GROUND ROD IN AN ACCESSIBLE LOCATION, IN EARTH 2'-0" FROM EXTERIOR WALL OF BUILDING OR IN COMPUTER ROOM. CONNECT TO MAIN BUILDING GROUNDING ELECTRODE WITH 1#2 IN 3/4" CONDUIT.
2. CONTRACTOR SHALL COORDINATE PLACEMENT OF ALL DATA/COMMUNICATIONS ROUGH-IN WITH OWNER'S REPRESENTATIVE. FINISH ALL WALLS OF DATA ROOM WITH 3/4" FIRE RESISTIVE PLYWOOD FOR USE AS TERMINAL BACKBOARD.
3. PROVIDE 1" EMPTY PVC CONDUIT WITH PULL WIRE OR TAPE FOR RAIN WATER COLLECTION SYSTEM CONTROL PANEL. ROUTE CONDUIT FROM DDC TO CONTROL PANEL 24" BFG MINIMUM. SEE ELECTRICAL SITE PLAN ON SHEET E2 FOR LOCATION OF CONTROL PANEL. COORDINATE LOCATION OF DDC WITH MECHANICAL CONTRACTOR IN FIELD.
4. PROVIDE TWO 2" EMPTY CONDUITS EACH WITH PULL WIRE OR TAPE FOR FUTURE CONNECTION TO SECURITY CAMERAS IN PARKING AND RAMP AREAS. ROUTE CONDUITS AS SHOWN 18" BFF MINIMUM. COORDINATE LOCATION OF CONDUIT STUB-UP WITH OWNER PRIOR TO ROUGH-IN.
5. 3-4" UNDERGROUND CONDUITS FOR INCOMING COMMUNICATIONS CABLES. TURN UP IN ROOM 112 WITH LONG SWEEP ELBOWS AND CAP 6" AFF. RUN TO POINT OF UNDERGROUND CABLE ENTRANCE AS SHOWN ON SHEET E2 ELECTRICAL SITE PLAN. CAP THERE 24" BELOW GRADE.

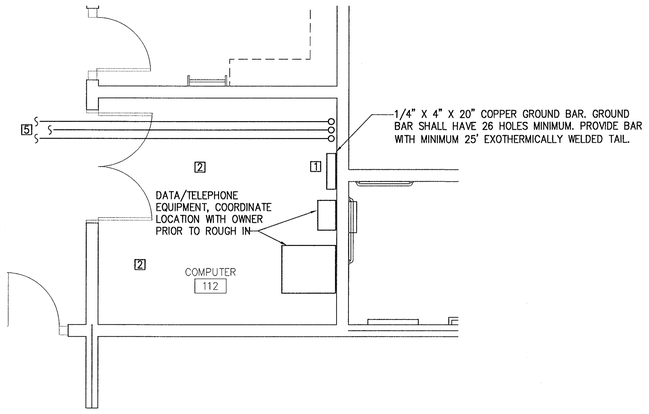

NORTH

COMM ROOM PART PLAN

SCALE: 1/4" = 1'-0"

GRAPHIC SCALES

0 4 8 12 16 20 24

SCALE: 1/8" = 1'-0"

0 2 4 6 8 10 12

SCALE: 1/4" = 1'-0"

ENGINEERS • ARCHITECTS • PLANNERS
449 McLaws Circle, Williamsburg, VA 23185
Phone: 757.253.0673 Fax: 757.253.2319
Norfolk-Virginia Beach: 757.374.5015
www.djginc.com
DJG INC.
COMMITTED TO EXCELLENCE

COMMONWEALTH OF VIRGINIA
JOSEPH ADAM MICKIEWICZ
No. 38888
8/3/06
PROFESSIONAL ENGINEER

THE DOCUMENT CONTAINS INFORMATION PROPRIETARY TO DJG, INC. AND IS FURNISHED IN CONFIDENCE AS AN INSTRUMENT OF SERVICE FOR THE LIMITED PURPOSE OF EVALUATION, BIDDING AND/OR REVIEW. IT SHALL NOT BE DISTRIBUTED OR REPRODUCED IN WHOLE OR IN PART, OR THE MODIFICATION OF ANY DETAIL OR DESIGN WITHOUT THE EXPRESSED WRITTEN CONSENT OF DJG, INC. IS PROHIBITED. ALL RIGHTS RESERVED. COPYRIGHT (C) 2006.

REVISIONS

	DATE	DESCRIPTION

ELECTRICAL SIGNAL PLAN

VIRGINIA DEPARTMENT OF TRANSPORTATION
NEW KENT SAFETY REST AREA AND INFORMATION CENTER
NEW KENT COUNTY, VIRGINIA

SCALE	AS NOTED
DESIGNED	DWR
DRAWN	LDP
CHECKED	JAM
DATE	8/3/06

COMMISSION NUMBER
2070030

SHEET NUMBER
E6

PANELBOARD SCHEDULE

PANEL "MDP"

600A MLO, 208Y/120V, 3ø, 4W, SURFACE MOUNTED, GROUND BUS, 10 KAIC

LOAD SERVED	LOAD (AMPS)			CKT BKR		WIRE SIZE	CKT NO.	PHASE	CKT NO.	WIRE SIZE	CKT BKR		LOAD (AMPS)			LOAD SERVED
	A	B	C	KAIC	TRIP			A B C			TRIP	KAIC	A	B	C	
	75.0												62.5			
PANEL LA THRU TRANSFORMER		75.0		10	100	2	3		4	4	80	10		66.0		PANEL PA
			75.0												65.4	
	274.2												218.0			
PANEL MA		274.2		10	300	350	9		10	2/0	175	10		217.0		PANEL PB
			256.4												216.0	
													251.0			
PREPARED SPACE					400		15		16	3/0	200	10		251.0		PANEL PC
															231.0	
PREPARED SPACE					250		21		22		100					PREPARED SPACE
PREPARED SPACE					100		27		28		100					PREPARED SPACE
SPACE ONLY							31		32							SPACE ONLY
SPACE ONLY							33		34							SPACE ONLY
SPACE ONLY							35		36							SPACE ONLY
SPACE ONLY							37		38							SPACE ONLY
SPACE ONLY							39		40							SPACE ONLY
SPACE ONLY							41		42							SPACE ONLY
TOTAL	349.2	349.2	331.4										531.5	534.0	512.4	TOTAL

TOTAL CONNECTED AMPS A=880.7 B=883.2 C=843.8

PANELBOARD SCHEDULE

PANEL "PA"

225A MLO, 208Y/120V, 3ø, 4W, SURFACE MOUNTED, GROUND BUS, 10 KAIC

LOAD SERVED	LOAD (AMPS)			CKT BKR		WIRE SIZE	CKT NO.	PHASE	CKT NO.	WIRE SIZE	CKT BKR		LOAD (AMPS)			LOAD SERVED
	A	B	C	KAIC	TRIP			A B C			TRIP	KAIC	A	B	C	
RECEPTACLES	7.5			10	20	12	1		2	12	20	10	7.5			RECEPTACLES
RECEPTACLES		7.5		10	20	12	3		4	12	20	10		3.0		EWC
RECEPTACLES			6.0	10	20	12	5		6	12	20	10			10.0	RECEPTACLES & TV'S
RECEPTACLES	7.5			10	20	12	7		8	12	20	10	5.0			FLOOR RECEPTACLES
RECEPTACLES		6.0		10	20	12	9		10	12	20	10		5.0		FLOOR RECEPTACLES
RECEPTACLES			7.5	10	20	12	11		12	12	20	10			6.0	RECEPTACLES
RECEPTACLES	6.0			10	20	12	13		14	12	20	10	5.0			VENDING 3
RECEPTACLES		6.0		10	20	12	15		16	12	20	10		5.0		VENDING 2
RECEPTACLES			6.0	10	20	12	17		18	12	20	10			5.0	VENDING 1
RECEPTACLES	7.5			10	20	12	19		20	12	20	10	5.0			VENDING 6
RECEPTACLES		6.0		10	20	12	21		22	12	20	10		5.0		VENDING 5
EWC			3.0	10	20	12	23		24	12	20	10			5.0	VENDING 4
RECEPTACLES	7.5			10	20	12	25		26	12	20	10	2.0			ATTIC RECEPT & LIGHT
RECEPTACLES		7.5		10	20	12	27		28	10	20	10		5.0		RECEPTACLES
MOTORIZED DOOR			3.5	10	20	12	29		30	10	20	10			8.4	GENSET JACKET HEATER
SPARE				10	20		31		32	10	20	10	2.0			GENSET BATTERY CHARGER
SPARE				10	20		33		34	10	20	10		10.0		MAINTENANCE BLD
SPARE				10	20		35		36	12	20	10			5.0	DDC
SPACE ONLY							37		38							SPACE ONLY
SPACE ONLY							39		40							SPACE ONLY
SPACE ONLY							41		42							SPACE ONLY
TOTAL	36.0	33.0	26.0										26.5	33.0	39.4	TOTAL

TOTAL CONNECTED AMPS A=62.5 B=66.0 C=65.4

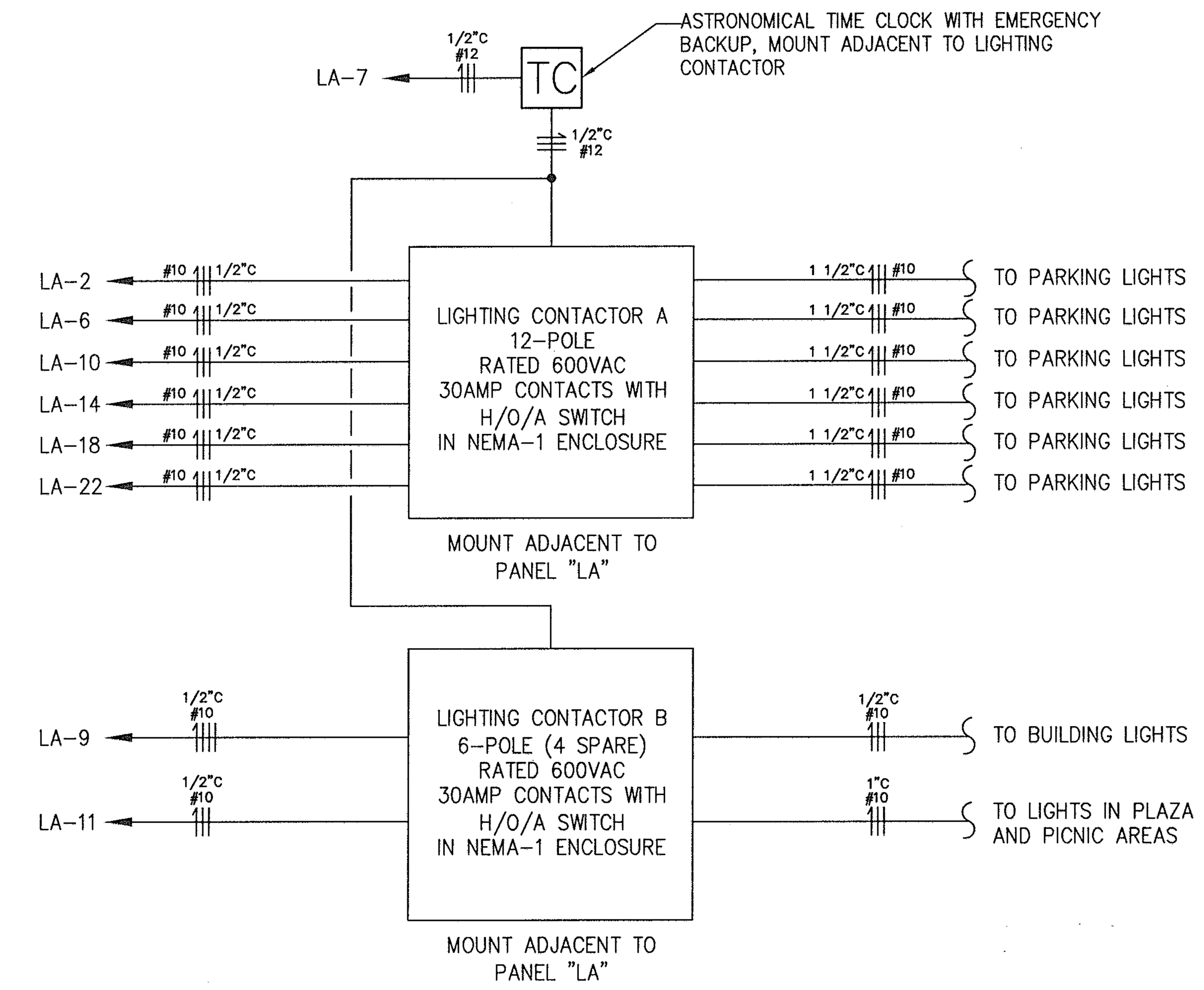

TIME CLOCK-CONTACTOR DETAIL

NOT TO SCALE

PANELBOARD SCHEDULE

PANEL "LA"

50A MCB, 480Y/277V, 3ø, 4W, SURFACE MOUNTED, GROUND BUS, 10 KAIC

LOAD SERVED	LOAD (AMPS)			CKT BKR		WIRE SIZE	CKT NO.	PHASE	CKT NO.	WIRE SIZE	CKT BKR		LOAD (AMPS)			LOAD SERVED
	A	B	C	KAIC	TRIP			A B C			TRIP	KAIC	A	B	C	
INDOOR LIGHTING	8.6			10	20	12	1		2	10	20	10	7.0			SITE LIGHTING
INDOOR LIGHTING		11.1		10	20	12	3							7.0		
INDOOR LIGHTING			6.3	10	20	12	5		6	10	20	10			2.8	SITE LIGHTING
TIMECLOCK	2.0			10	20	12	7						2.8			
BUILDING LIGHTS		3.0		10	20	10	9		10	10	20	10		4.2		SITE LIGHTING
PLAZA AND PICNIC LIGHTING			8.9	10	20	10	11								4.2	
SPARE				10	20		13		14	10	20	10	9.3			SITE LIGHTING
SPARE				10	20		15							9.3		
SPARE				10	20		17		18	10	20	10			3.3	SITE LIGHTING
SPARE				10	20		19						3.3			
SPARE				10	20		21		22	10	20	10		4.7		SITE LIGHTING
SPARE				10	20		23								4.7	
SPACE ONLY							25		26							SPACE ONLY
SPACE ONLY							27		28							SPACE ONLY
SPACE ONLY							29		30							SPACE ONLY
SPACE ONLY							31		32							SPACE ONLY
SPACE ONLY							33		34							SPACE ONLY
SPACE ONLY							35		36							SPACE ONLY
SPACE ONLY							37		38							SPACE ONLY
SPACE ONLY							39		40							SPACE ONLY
SPACE ONLY							41		42							SPACE ONLY
TOTAL	10.6	14.1	15.2										22.4	25.2	15.0	TOTAL

TOTAL CONNECTED AMPS A=33.0 B=39.3 C=30.2

PANELBOARD SCHEDULE

PANEL "PB"

225A MLO, 208Y/120V, 3ø, 4W, SURFACE MOUNTED, GROUND BUS, 10 KAIC

LOAD SERVED	LOAD (AMPS)			CKT BKR		WIRE SIZE	CKT NO.	PHASE	CKT NO.	WIRE SIZE	CKT BKR		LOAD (AMPS)			LOAD SERVED
	A	B	C	KAIC	TRIP			A B C			TRIP	KAIC	A	B	C	
WOMEN'S WATER HEATER	32.0			10	40	8	1		2	8	45	10	35.0			SINK WATER HEATER
		32.0												35.0		
WOMEN'S WATER HEATER			32.0	10	40	8	5		6	8	45	10			35.0	SINK WATER HEATER
	32.0												35.0			
WOMEN'S WATER HEATER		32.0		10	40	8	9		10	8	45	10		35.0		SINK WATER HEATER
			32.0												35.0	
SINK WATER HEATER	20.0			10	30	10	13		14	10	30	10	20.0			SINK WATER HEATER
		20.0												20.0		
SINK WATER HEATER			20.0	10	30	10	17		18	10	30	10			20.0	SINK WATER HEATER
	20.0												20.0			
SINK WATER HEATER		20.0		10	30	10	21		22	10	30	10		19.0		FAMILY HAND DRYER
			20.0						24	10	30	10			19.0	FAMILY HAND DRYER
FLUSH VALVE SENSOR	1.0			10	20	12	25		26	12	20	10	1.0			FLUSH VALVE SENSOR
SINK SENSOR RECEPTACLE		1.0		10	20	12	27		28	12	20	10		1.0		SINK SENSOR RECEPTACLE
SINK SENSOR RECEPTACLE			1.0	10	20	12	29		30	12	20	10			1.0	SINK SENSOR RECEPTACLE
FLUSH VALVE SENSOR	1.0			10	20	12	31		32	12	20	10	1.0			SINK SENSOR RECEPTACLE
SINK SENSOR RECEPTACLE		1.0		10	20	12	33		34	12	20	10		1.0		SINK SENSOR RECEPTACLE
SINK SENSOR RECEPTACLE			1.0	10	20	12	35		36		20	10				SPARE
SPARE				10	20		37		38							SPACE ONLY
SPARE				10	20		39		40							SPACE ONLY
SPARE				10	20		41		42							SPACE ONLY
TOTAL	106.0	106.0	106.0										112.0	111.0	110.0	TOTAL

TOTAL CONNECTED AMPS A=218.0 B=217.0 C=216.0

CONNECTED LOAD SCHEDULE

LOAD DESCRIPTION	VOLTAGE-PHASE (ø)	CONNECTED LOAD (KVA)
LIGHTING, INTERIOR	277V, 1ø	7.9
LIGHTING, EXTERIOR	480V, 1ø	18.5
RECEPTACLES & SMALL 1ø LOADS	120V, 1ø	19.6
HAND DRYERS	120V, 1ø	39.1
WATER HEATERS	208V, 1ø/3ø	105.6
MECHANICAL EQUIPMENT	208V, 3ø	86.9
TOTAL CONNECTED LOAD		277.6 KVA
TOTAL DEMAND		190.2 KVA
TOTAL MOTOR LOAD	76.9 KVA	
LARGEST MOTOR	5 HP (6.1KVA)	

PANELBOARD SCHEDULE

PANEL "MA"

400A MLO, 208Y/120V, 3ø, 4W, SURFACE MOUNTED, GROUND BUS, 10 KAIC

LOAD SERVED	LOAD (AMPS)			CKT BKR		WIRE SIZE	CKT NO.	PHASE	CKT NO.	WIRE SIZE	CKT BKR		LOAD (AMPS)			LOAD SERVED
	A	B	C	KAIC	TRIP			A B C			TRIP	KAIC	A	B	C	
	62.1												16.7			
ERU-1		62.1		10	80	4	3		4	10	25	10		16.7		EDH-1
			62.1												16.7	
	27.5												2.8			
GSHP-1		27.5		10	45	8	9		10	12	20	10		2.8		EDH-2
			27.5												2.8	
	27.5												33.4			
GSHP-2		27.5		10	45	8	15		16	8	60	10		33.4		TOILET FLUSH SYSTEM PUMPS
			27.5												33.4	
	27.5												7.5			
GSHP-4		27.5		10	45	8	21		22	10	20	10		7.5		RAIN WATER COLLECTION PUMPS
			27.5												7.5	
GSHP-3	17.8			10	30	10	25						16.7			
		17.8							28	10	40	10		16.7		P-1A
	9.0														16.7	
UH-1		9.0		10	20	12	31						16.7			
			9.0						34	10	40	10		16.7		P-1B
SPACE ONLY							35								16.7	
SPACE ONLY							37						9.0			
SPACE ONLY							39		40	12	20	10		9.0		UH-2
SPACE ONLY							41								9.0	
TOTAL	171.4	171.4	153.6										102.8	102.8	102.8	TOTAL

TOTAL CONNECTED AMPS A=274.2 B=274.2 C=256.4

PANELBOARD SCHEDULE

PANEL "PC"

225A MLO, 208Y/120V, 3ø, 4W, SURFACE MOUNTED, GROUND BUS, 10 KAIC

LOAD SERVED	LOAD (AMPS)			CKT BKR		WIRE SIZE	CKT NO.	PHASE	CKT NO.	WIRE SIZE	CKT BKR		LOAD (AMPS)			LOAD SERVED
	A	B	C	KAIC	TRIP			A B C			TRIP	KAIC	A	B	C	
HAND DRYER WOMENS 1	19.0			10	30	10	1		2	10	30	10	19.0			HAND DRYER MENS 1
HAND DRYER WOMENS 1		19.0		10	30	10	3		4	10	30	10		19.0		HAND DRYER MENS 1
HAND DRYER WOMENS 1			19.0	10	30	10	5		6	10	30	10			19.0	HAND DRYER MENS 1
HAND DRYER WOMENS 2	19.0			10	30	10	7		8	10	30	10	19.0			HAND DRYER MENS 2
HAND DRYER WOMENS 2		19.0		10	30	10	9		10	10	30	10		19.0		HAND DRYER MENS 2
HAND DRYER WOMENS 2			19.0	10	30	10	11		12	10	30	10			19.0	HAND DRYER MENS 2
HAND DRYER WOMENS 3	19.0			10	30	10	13		14	8	45	10	35.0			SINK WATER HEATER
HAND DRYER WOMENS 3		19.0		10	30	10	15							35.0		
HAND DRYER WOMENS 3			19.0	10	30	10	17		18	8	45	10			35.0	SINK WATER HEATER
MEN'S WATER HEATER	32.0			10	40	8	19						35.0			
		32.0							22	10	30	10		20.0		SINK WATER HEATER
MEN'S WATER HEATER			32.0	10	40	8	23								20.0	
	32.0								26	12	20	10	1.0			FLUSH VALVE SENSOR
MEN'S WATER HEATER		32.0		10	40	8	27		28	12	20	10		1.0		SINK SENSOR RECEPTACLE
			32.0						30	10	30	10			1.0	SINK SENSOR RECEPTACLE
FLUSH VALVE SENSOR	1.0			10	20	12	31		32	10	30	10	20.0			SINK WATER HEATER
SINK SENSOR RECEPTACLE		1.0		10	20	12	33							20.0		
SINK SENSOR RECEPTACLE			1.0	10	20	12	35		36							SPARE
SPACE ONLY							37		38							SPARE
SPACE ONLY							39		40							SPARE
SPACE ONLY							41		42							SPARE
TOTAL	122.0	122.0	122.0										129.0	129.0	109.0	TOTAL

TOTAL CONNECTED AMPS A=251.0 B=251.0 C=231.0

ENGINEERS • ARCHITECTS • PLANNERS
DJG INC.
449 McLaws Circle, Williamsburg, VA 23185
Phone: 757.253.0673 Fax: 757.253.2319
Norfolk-Virgina Beach: 757.874.5015
www.djginc.com
COMMITTED TO EXCELLENCE

COMMONWEALTH OF VIRGINIA
JOSEPH ADAM MICKIEWICZ
No. 38888
8/3/06
PROFESSIONAL ENGINEER

THIS DOCUMENT CONTAINS INFORMATION PROPRIETARY TO DJG, INC. AND IS FURNISHED IN CONFIDENCE AN AN INSTRUMENT OF SERVICE FOR THE LIMITED PURPOSE OF EVALUATION, BIDDING AND REVIEW, OR CONSTRUCTION OF A SPECIFIC PROJECT. REPRODUCTION OF THIS DOCUMENT, IN WHOLE OR IN PART, OR THE MODIFICATION OF ANY DETAIL OR DESIGN WITHOUT THE EXPRESSED, WRITTEN CONSENT OF DJG, INC. IS PROHIBITED. ALL RIGHTS RESERVED. COPYRIGHT (C) 2006.

REVISIONS		
NO.	DATE	DESCRIPTION

ELECTRICAL DETAILS & PANELBOARD SCHEDULES

VIRGINIA DEPARTMENT OF TRANSPORTATION
NEW KENT SAFETY REST AREA AND INFORMATION CENTER
NEW KENT COUNTY, VIRGINIA

SCALE	DESIGNED	DRAWN	CHECKED	DATE
AS NOTED	DWR	LDP	JAM	8/3/06

COMMISSION NUMBER
2070030

SHEET NUMBER
E7