Chapter 4 – Retention Basin

TABLE OF CONTENTS

4.1 Overview of Practice 1

4.2 Site Constraints and Siting of the Facility 2

4.2.1 Minimum Drainage Area 2
4.2.2 Maximum Drainage Area 2
4.2.3 Separation Distances 2
4.2.4 Site Slopes 2
4.2.5 Site Soils 2
4.2.6 Rock 3
4.2.7 Existing Utilities 3
4.2.8 Karst 3
4.2.9 Wetlands 3
4.2.10 Upstream Sediment Considerations 4
4.2.11 Downstream Considerations 4
4.2.12 Floodplains 4
4.2.13 Basin Location 5
4.2.14 Implementation as a Regional Stormwater Management Facility 5

4.3 General Design Guidelines 6

4.3.1 Foundation and Embankment Material 6
4.3.2 Outfall Piping 6
4.3.3 Embankment 6
4.3.4 Embankment Height 7
4.3.5 Permanent Pool Volume 7
4.3.6 Prevention of Short-Circuiting (Basin Geometry) 8
4.3.7 Ponded Depth 8
4.3.8 Aquatic Bench 9
4.3.9 Principal Spillway Design 9
4.3.10 Fencing 10
4.3.11 Signage 10
4.3.12 Sediment Forebays 10
4.3.13 Discharge Flows 10

4.4 Design Process 11

Step 1. Determine Permanent Pool Volume of the Basin as a Function of the Project Site Water Quality Volume 11

Step 2. Allocate the Computed Permanent Pool Volume into Regions of Varying Depth 12

Step 3. Estimate Total Land Area of the Retention Basin 14

Step 4. Development of Stage – Storage Relationship 17

Step 5. Design of the Submerged Release Outlet 19

Step 6. Embankment Design 22

Step 7. Water Balance Calculation 26

Step 7A. 45-Day Drought Condition 26

Step 7B. Period of Greatest Evaporation (in Average Year) 28

Step 8. Landscaping 29

LIST OF TABLES

Table 4.1. Retention Basin Removal Efficiencies 7
Table 4.2. Surface Area – Permanent Pool Depth Relationships 8
Table 4.3. Hydrologic Characteristics of Example Project Site 11
Table 4.4. Summary of Varying Depth Zones 13
Table 4.5. Basin Surface Dimensions 17
Table 4.6. Suitable Embankment Material 25
Table 4.7. Potential Evaporation Rates (Inches) 26

LIST OF FIGURES

Figure 4.1. Schematic Retention Basin Plan and Sectional View 1
Figure 4.2. Schematic Aquatic Bench Section 9
Figure 4.3. Schematic Basin Configuration 14
Figure 4.4. Plot of Storage Volume Versus Depth Above Permanent Pool 16
Figure 4.5. Retention Basin Stage – Storage Relationship 18
Figure 4.6. Graphical Depiction of Varying Depth Zones – Permanent Pool and Flood Control Storage 18
Figure 4.7. Schematic Retention Basin Outlet Configuration 19
Figure 4.8. Typical Cutoff Trench Configuration 23
Figure 4.9. Minimum and Maximum Size of Embankment Core 24
Figure 4.10. Example Basin Embankment Dimensions 25
Figure 4.11. Planting Zones for Stormwater BMPs 29
Figure 4.12. USDA Plant Hardiness Zones 30

4.1 Overview of Practice

A retention basin (also called a "wet pond"), by definition, is a basin which retains a portion of its inflow in a permanent pool such that the basin is typically wet even during non-runoff producing periods. Generally, stormwater runoff is stored above the permanent pool, as necessary, to provide flood control and/or downstream channel protection. Retention basins are capable of providing downstream flood control, water quality improvement, channel erosion control, and the reduction of post-development runoff rates to pre-development levels. Retention basins have some of the highest pollutant removal efficiencies of any BMP available.

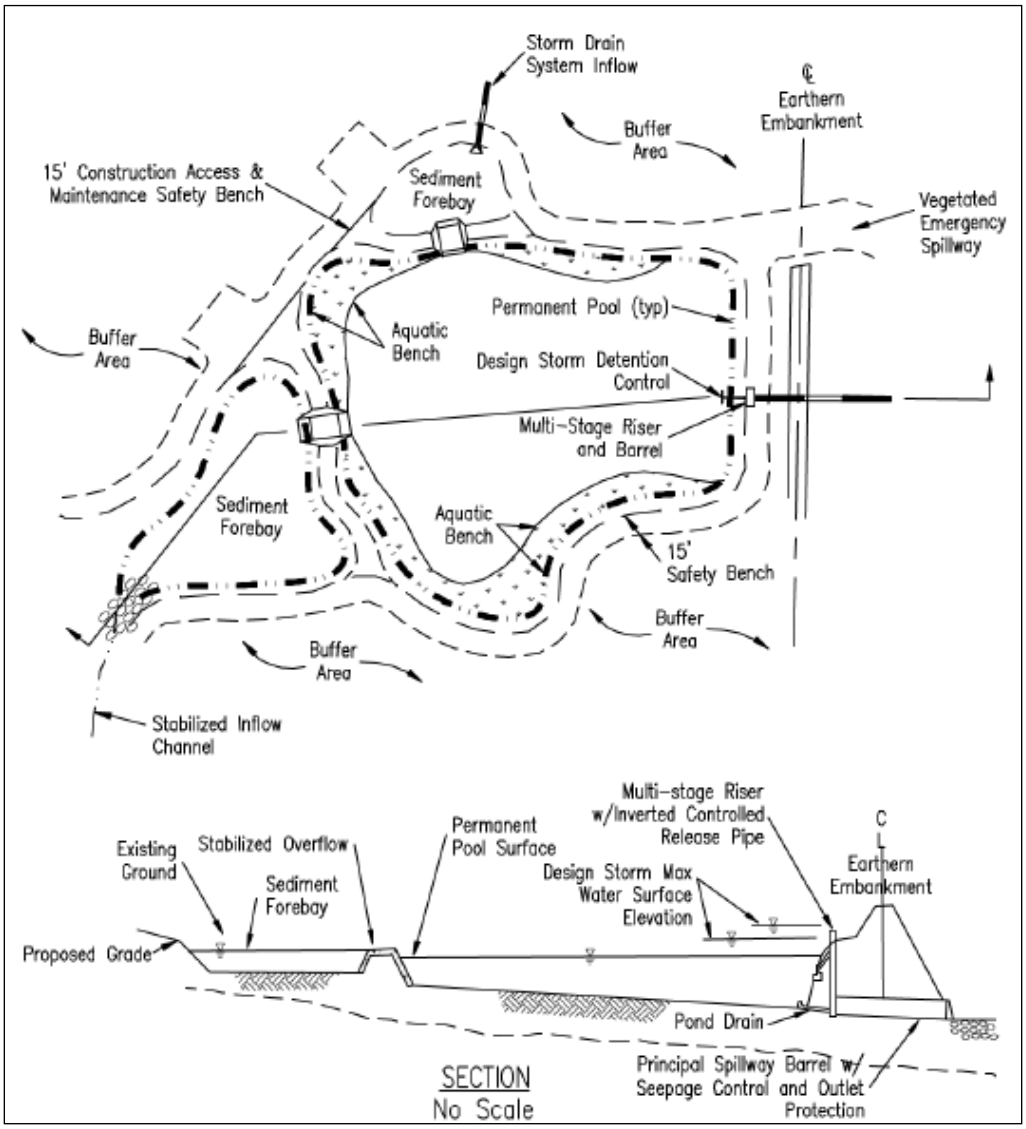

Figure 4.1. Schematic Retention Basin Plan and Sectional View
(Virginia Stormwater Management Handbook, 1999, Et seq.)

Figure 4.1 presents the schematic layout of a retention basin presented in the Virginia Stormwater Management Handbook (DCR, 1999, Et seq.).

4.2 Site Constraints and Siting of the Facility

In addition to impervious cover, the engineer must consider a number of additional site constraints when the implementation of a retention basin is proposed. These constraints are discussed as follows.

4.2.1 Minimum Drainage Area

A retention basin should generally not be considered for contributing drainage areas of less than 10 acres. Critical concern is the presence of adequate baseflow to the pond. Should the pond become dry or stagnant, problems such as algae blooms and undesirable odors will arise. Regardless of drainage area, all proposed retention basins should be subjected to a low flow analysis to ensure that an adequate permanent pool volume is retained even during periods of dry weather when evaporation and/or infiltration are occurring at a high rate. The anticipated baseflow from a fixed drainage area can exhibit great variability, and insufficient baseflow may require consideration of alternate BMP measures.

The presence of a shallow groundwater table, which is common in the Tidewater region of the state, may allow for the implementation of a retention basin whose contributing drainage area is very small. These circumstances are site-specific, and the groundwater elevation must be monitored closely to establish the design elevation of the permanent pool.

4.2.2 Maximum Drainage Area

The maximum drainage area to retention basin is not explicitly restricted; however, the designer should consider that, generally, an area ranging between one and three percent of the total contributing drainage area is required for construction of the basin. Therefore, the total contributing drainage area to a retention basin is frequently limited to 10 square miles. (FHWA, 1996) It is noted that a retention basin serving 10 square miles will require a minimum of 128 acres in area. Such a facility would be considered “regional,” and is not typically encountered on linear development projects.

4.2.3 Separation Distances

Retention basins should be kept a minimum of 20 feet from any permanent structure or property line, and a minimum of 100 feet from any septic tank or drainfield.

4.2.4 Site Slopes

Generally, retention basins should not be constructed within 50 feet of any slope steeper than 15 percent. When this is unavoidable, a geotechnical report is required to address the potential impact of the facility in the vicinity of such a slope. This report should be submitted to the Materials Division for evaluation.

4.2.5 Site Soils

The implementation of a retention basin can be successfully accomplished in the presence of a variety of soil types; however, when such a facility is proposed, a subsurface analysis and permeability test is required. The required subsurface analysis should investigate soil characteristics to a depth of no less than three feet below the proposed bottom of the basin. Data from the subsurface investigation should be

provided to the Materials Division early in the project planning stages to evaluate the feasibility of such a facility on native site soils. When a retention basin is being considered for a site, water inflows (baseflow, surface runoff, and groundwater) must be greater than losses to evaporation and infiltration. Consequently, soils exhibiting high infiltration rates are not suited for the construction of a retention basin. Often, soils of moderately high permeability are capable of supporting dry extended detention facilities and even the permanent marsh areas of an enhanced dry extended detention facility; however, the hydraulic head (pressure) generated from a permanent pool may increase a soil's effective infiltration rate rendering similar soils unsuitable for a retention basin. A clay liner, geosynthetic membrane, or other material (as approved by the Materials Division) may be employed to combat excessively high infiltration rates. The basin embankment material must meet the specifications detailed later in this section and/or be approved by the Materials Division.

4.2.6 Rock

The presence of rock within the proposed construction envelope of a retention basin should be examined during the aforementioned subsurface investigation. When blasting of rock is necessary to obtain the desired basin volume, a liner should be used to eliminate unwanted losses through seams in the underlying rock.

4.2.7 Existing Utilities

Basins should not be constructed over existing utility rights-of-way or easements. When this situation is unavoidable, permission to impound water over these easements must be obtained from the utility owner *prior* to design of the basin. When it is proposed to relocate existing utility lines, the costs associated with their relocation should be included in the overall basin construction cost.

4.2.8 Karst

The presence of karst topography places even greater importance on the initial subsurface investigation. Implementation of retention basins in karst regions may greatly increase the design and construction cost of the facility, and must be evaluated early in the planning phases of a project. ***Construction of stormwater management facilities within a sinkhole is prohibited.*** When the construction of such a facility is planned along the periphery of a sinkhole, the facility design must comply with the guidelines found in Instructional and Informational Memorandum IIM-LD-228 on *"Sinkholes"* and DCR's Technical Bulletin #2 *"Hydrologic Modeling and Design in Karst* at " http://dcr.cache.vi.virginia.gov/stormwater_management/documents/tecbltn2.PDF .

4.2.9 Wetlands

When the construction of a retention basin is planned in the vicinity of known wetlands, the designer must coordinate with the appropriate local, state, and federal agencies to identify the wetlands' boundaries, their protected status, and the feasibility of BMP implementation in their vicinity. In Virginia, the Department of Environmental Quality (DEQ) and the U.S. Army Corps of Engineers (USACOE) should be contacted when such a facility is proposed in the vicinity of known wetlands.

4.2.10 Upstream Sediment Considerations

Close examination should be given to the flow velocity at all basin inflow points. When entering flows exhibit erosive velocities, they have the potential to greatly increase the basin's maintenance requirements by depositing large amounts of sediment. Additionally, when the basin contributing drainage area is highly pervious, it has the potential to hinder basin performance through the deposition of excessive sediment. Sediment forebays should be located at all entrance points to the basin which receive concentrated runoff. A 20-foot wide vegetated buffer should be located around the entire periphery of the basin to further combat against excessive sediment deposition. The designer must consider this buffer early in the project planning stages, as it inherently increases the land area that is dedicated to the basin.

4.2.11 Downstream Considerations

Retention basins can significantly alter the characteristics of the watercourses to which they discharge. These impacts are most often recognized in terms of biological oxygen demand (BOD), dissolved oxygen (DO), and water temperature. These impacts may be quite detrimental to the receiving water body, particularly if the body of water is a designated cold water trout stream. Careful consideration must be given during the design process, particularly to the depth and configuration of the basin permanent pool, to minimize the impacts to downstream waters. When the proposed basin will discharge into a stream which supports a trout population, the designer should contact the Department of Game and Inland Fisheries (DGIF) to determine the feasibility of the basin and any additional measures which may be required should its design and construction proceed.

The designer must also be aware of other impounding facilities within the same watershed as the proposed basin. The presence of multiple basins in a single watershed may give rise to peak synchronization such that releases from individual basins coincide resulting in a cumulative flow rate beyond what downstream receiving channels are capable of accommodating. Basin discharge synchronization may also lead to an increased duration of high flow in downstream channels. Flow durations beyond what are historically observed in natural channels may lead to excessive erosion and degradation.

4.2.12 Floodplains

The construction of stormwater impounding facilities within floodplains is strongly discouraged. When this situation is deemed unavoidable, critical examination must be given to ensure that the proposed basin remains functioning effectively during the 10-year flood event. The structural integrity and safety of the basin must also be evaluated thoroughly under 100-year flood conditions as well as the basin's impact on the characteristics of the 100-year floodplain. When basin construction is proposed within a floodplain, construction and permitting must comply with all applicable regulations under FEMA's National Flood Insurance Program.

4.2.13 Basin Location

Unlike dry detention facilities, retention basins are often considered a desirable site amenity. Therefore, when properly designed, landscaped, and maintained, retention basins may be suitable for high visibility locations; however, when a retention basin is proposed in a high visibility location, ongoing maintenance of the facility is critical to its acceptance by neighboring landowners.

4.2.14 Implementation as a Regional Stormwater Management Facility

The costs associated with constructing and maintaining a retention basin are often prohibitive; however, as the area contributing runoff to a retention basin increases, the total cost per acre decreases. Therefore, when a retention basin is chosen as the stormwater BMP it should, when possible, be implemented as part of a regional approach to stormwater management. The concept of regional stormwater management is endorsed by VDOT provided the following requirements are met per Instructional and Informational Memorandum IIM-LD-195 under *"Post Development Stormwater Management,"*, Section 7.0:

- Development and use of regional stormwater management facilities must be a joint undertaking by VDOT and the local governing body. The site must be part of a master stormwater management plan developed and/or approved by the local governing body and any agreements related to these facilities must be consummated between VDOT and the local governing body. VDOT may enter into an agreement with a private individual or corporation provided the local governing body has a SWM program that complies with the Virginia SWM regulations and the proper agreements for maintenance and liability of the regional facility have been executed between the local governing body and the private individual or corporation.

- Where an existing or potential VDOT roadway embankment will serve as an impounding structure for a regional facility, the right of way line will normally be set at the inlet face of the main drainage structure. The local government would be responsible for the maintenance and liabilities outside of the right of way and the VDOT would accept the same responsibilities inside the right of way.

- The design of regional stormwater management facilities must address any mitigation needed to meet the water quality and quantity requirements of proposed or future roadway projects within the contributing watershed. Regional SWM facilities located upstream of a roadway project shall provide sufficient mitigation for any water quality and quantity impacts of run-off from the roadway project which may bypass the facility.

4.3 General Design Guidelines

The following presents a collection of design issues to be considered when designing a retention basin. Many of these items are expanded upon later in this document within the context of a full design example.

4.3.1 Foundation and Embankment Material

Foundation data for the dam must be secured by the Materials Division to determine whether or not the native material is capable of supporting the dam while not allowing water to seep under the dam. Per Instructional and Informational Memorandum IIM-LD-195 under *"Post Development Stormwater Management,"*, Section 12.1.1:

> *"The foundation material under the dam and the material used for the embankment of the dam should be an AASHTO Type A-4 or finer and/or meet the approval of the Materials Division. If the native material is not adequate, the foundation of the dam is to be excavated and backfilled a minimum of 4 feet or the amount recommended by the VDOT Materials Division. The backfill and embankment material must meet the soil classification requirements identified herein or the design of the dam may incorporate a trench lined with a membrane (such as bentonite penetrated fabric or an HDPE or LDPE liner). Such designs shall be reviewed and approved by the VDOT Materials Division before use."*

The presence of a permanent pool requires that the dam of a retention basin be composed of homogenous material with seepage controls or zoned embankments.

During the initial subsurface investigation, additional borings should be made near the center of the proposed basin when:

- Excavation from the basin will be used to construct the embankment
- The likelihood of encountering rock during excavation is high
- A high or seasonally high water table, generally two feet or less below the ground surface, is suspected

4.3.2 Outfall Piping

The pipe culvert under or through the basin embankment shall be reinforced concrete equipped with rubber gaskets. Pipe: Specifications Section 232 (AASHTO M170), Gasket: Specification Section 212 (ASTM C443).

A concrete cradle shall be used under the pipe to prevent seepage through the dam. The cradle shall begin at the riser or inlet end of the pipe, and extend the pipe's full length.

4.3.3 Embankment

The top width of the embankment should be a minimum of 10 feet in width to provide ease of construction and maintenance.

To permit mowing and other maintenance, the embankment slopes should be no steeper than 3H:1V. When the basin is proposed in a highly populated area, more gradual side slopes should be considered.

The designer is referenced to section 11.3.6 of the *VDOT Drainage Manual* for additional embankment details and specifications.

4.3.4 Embankment Height

A retention basin embankment may be regulated under the Virginia Dam Safety Act, Article 2, Chapter 6, Title 10.1 (10.1-604 et seq.) of the Code of Virginia and Dam Safety Regulations established by the Virginia Soil and Water Conservation Board (VS&WCB). A retention basin embankment may be excluded from regulation if it meets any of the following criteria:

- is less than six feet in height
- has a capacity of less than 50 acre-feet and is less than 25 feet in height
- has a capacity of less than 15 acre-feet and is more than 25 feet in height
- will be owned or licensed by the Federal Government

When an embankment is not regulated by the Virginia Dam Regulations, it must still be evaluated for structural integrity when subjected to the 100-year flood event.

4.3.5 Permanent Pool Volume

The volume of the basin permanent pool greatly influences the anticipated pollutant removal performance of the basin. Table 4.1 presents target phosphorus removal efficiencies corresponding to varying permanent pool volumes, and the impervious percentage to which each volume is best applied.

Pool Volume (Relative to WQV)	Target Phosphorus Removal Efficiency	Impervious Cover
3 x WQV	40%	22-37%
4 x WQV	50%	38-66%
4 x WQV with Aquatic Bench	65%	67-100%

Table 4.1. Retention Basin Removal Efficiencies
(Virginia Stormwater Management Handbook, 1999, Et seq.)

Presently, the Department of Conservation and Recreation (DCR) gives no additional water quality credit for an extended detention volume located above the basin permanent pool. Consequently, the water quality benefit of a retention basin is expressed solely as a function of its permanent pool volume.

The basin volume required to provide flood control in the form of reduced runoff peaks for various return frequency storms of interest is termed *dry storage*. This volume is “stacked” on top of the permanent pool volume and is released from the pond, generally, within a few hours of the conclusion of the runoff producing event.

If the basin is to serve the function of downstream channel protection, an additional volume must be stacked on top of the permanent pool and released over a period of not less than 24 hours. This volume is computed as the volume of runoff generated from the basin contributing drainage area by the 1-year return frequency storm.

The total basin volume is thus comprised of the permanent pool volume, the flood control volume for the greatest return frequency storm of interest, required freeboard, and, when applicable, the computed channel protection volume.

4.3.6 Prevention of Short-Circuiting (Basin Geometry)

Short-circuiting occurs when flows entering the basin pass rapidly through the basin without displacing an equal volume of previously stored water. Short-circuiting of flow can greatly reduce the hydraulic residence time within the basin, thus negatively impacting the water quality benefit. While site conditions will ultimately dictate the geometric configuration of the basin, it is preferable to construct the basin such that the length-to-width ratio is 3:1 or greater, with the widest point observed at the outlet end. If this is not possible, every effort should be made to design the basin with no less than a 2:1 length-to-width ratio. When this minimum ratio is not possible, consideration should be given to baffles constructed of gabions, earthen berms, or other permeable materials.

In addition to increasing the basin length-to-width ratio, the likelihood of short-circuiting can be further reduced by designing meandering flow paths rather than straight line paths from stormwater entrance points to the basin principal spillway.

4.3.7 Ponded Depth

The depth of the basin permanent pool affects the planting species selected for the basin as well as the types of aquatic and wildlife species that will inhabit the basin and its surrounding areas. Additionally, the depth of the permanent pool has a significant impact on pollutant removal performance of the basin. Basins sized too shallow will not support a diverse population of aquatic species, while basins whose permanent pool is excessively deep will tend to stratify. This stratification can potentially create anaerobic conditions leading to the resuspension / resolubilization of captured pollutants. (DCR, 1999, Et seq.). The majority of the permanent pool volume should range in depth from 2 to 6 feet. Approximately 15 percent of the permanent pool volume should be comprised of regions less than 18 inches in depth. These regions are easily obtained with the inclusion of an *aquatic bench.* An aquatic bench provides not only improved pollutant removal efficiency in the basin, but also serves as an important safety feature (discussed later). Table 4.2 presents recommended surface area – pool depth relationships.

Pool Depth (ft)	Surface Area (% of Total Surface Area)
0 - 1.5	15%
1.5 - 2	15%
2 - 6	70%

Table 4.2. Surface Area – Permanent Pool Depth Relationships
(Virginia Stormwater Management Handbook, 1999, Et seq.)

4.3.8 Aquatic Bench

An aquatic bench is a 10 to 15 foot wide area that slopes from a depth of zero inches at the shoreline of the basin to a depth of approximately 18 inches in the basin permanent pool. The shallow depth of the aquatic bench supports a diverse mix of emergent and wetland plant species as well as providing ideal habitat to predatory insects that feed on mosquitoes and other nuisance insects. Table 4.1 shows a target phosphorus removal efficiency of 65 percent for a basin equipped with an aquatic bench, compared to 50 percent for a basin with an equal pool volume, but no bench. The ability of an aquatic bench to support a dense and diverse mix of vegetation will also make the shoreline of the basin less susceptible to the erosive action associated with fluctuating water levels. Figure 4.2 illustrates the general configuration of an aquatic bench.

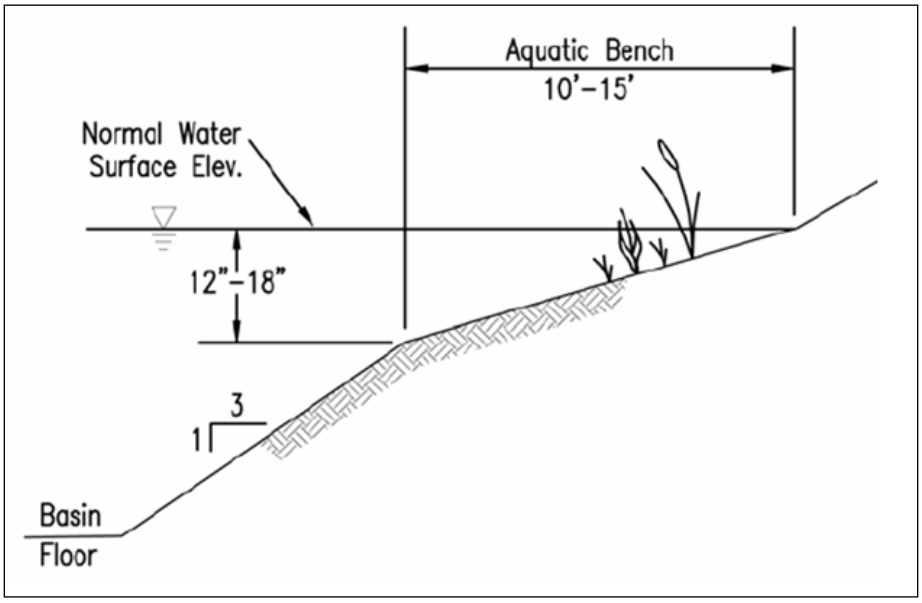

Figure 4.2. Schematic Aquatic Bench Section
(Virginia Stormwater Management Handbook, 1999, Et seq.)

The inclusion of an aquatic bench adds a significant safety feature to the basin, as it provides spatial disconnection from the basin's peripheral slope and its submerged slope. Whenever the total surface area of the basin permanent pool exceeds 20,000 ft^2 an aquatic bench should be considered an essential safety feature.

4.3.9 Principal Spillway Design

The basin outlet should be designed in accordance with Minimum Standard 3.02 of the Virginia Stormwater Management Handbook, (DCR, 1999, Et seq.). *The primary control structure (riser or weir) should be designed to operate in weir flow conditions for the full range of design flows*. This is to avoid vortex formation which can be highly destructive to the outlet structure. If this is not possible, and orifice flow regimes are anticipated, the outlet must be equipped with an anti-vortex device, consistent with that described in Minimum Standard 3.02 of the Virginia Stormwater Management Handbook.

4.3.10 Fencing

Per Instructional and Informational Memorandum IIM-LD-195 under *"Post Development Stormwater Management,"*, Section 13.1.1, fencing is typically *not required or recommended* on most VDOT detention facilities. However, exceptions do arise, and the fencing of a dry extended detention facility may be needed. Such situations include:

- Ponded depths greater than 3' and/or excessively steep embankment slopes
- The basin is situated in close proximity to schools or playgrounds, or other areas where children are expected to frequent
- It is recommended by the VDOT Field Inspection Review Team, the VDOT Residency Administrator, or a representative of the City or County who will take over maintenance of the facility

"No Trespassing" signs should be considered for inclusion on all detention facilities, whether fenced or unfenced.

4.3.11 Signage

"No Trespassing" signs should be considered for inclusion on all stormwater impoundment facilities, whether fenced or unfenced. Additionally, retention basins should be identified as potentially exhibiting the following hazards:

- Deep water
- Waterborne disease
- Vortex conditions (if applicable)

Signs should be easily viewed from all streets, sidewalks, and paths adjacent to the basin.

4.3.12 Sediment Forebays

Each basin inflow point should be equipped with a sediment forebay. The forebay volume should range between 0.1 and 0.25" over the individual outfall's impervious area or 10 percent of the required WQ_V.

4.3.13 Discharge Flows

All basin outfalls must discharge into an adequate receiving channel per the most current Virginia Erosion and Sediment Control (ESC) laws and regulations. Existing natural channels conveying pre-development flows may be considered receiving channels if they satisfactorily meet the standards outlined in the VESCH MS-19. Unless unique site conditions mandate otherwise, receiving channels should be analyzed for overtopping during conveyance of the 10-year runoff producing event and for erosive potential under the 2-year event.

4.4 Design Process

Many of the design elements in a retention basin are identical to those of a dry extended detention basin. These elements include estimation of flood control storage volumes, design of a multi-stage riser, storage indication (reservoir) routing, emergency spillway design, riser buoyancy calculations, and the design of sediment forebays. For those design items, the reader is referred to *Chapter 2 – Dry Extended Detention Basin*.

This section presents the elements of the design process as it pertains to retention basins serving as water quality BMPs. The pre and post-development runoff characteristics are intended to replicate stormwater management needs routinely encountered during linear development projects. The hydrologic calculations and assumptions presented in this section serve only as input data for the detailed BMP design steps. Full hydrologic discussion is beyond the scope of this report, and the user is referred to Chapter 4 of the Virginia Stormwater Management Handbook (DCR, 1999, Et seq.) for expanded coverage on hydrologic methodology.

The following example basin design is founded on the development scenario described in *Chapter 3 – Dry Extended Detention Basin Enhanced*. This example project entailed the construction of a small interchange and new section of two lane divided highway in Staunton. The total project site, including right-of-way and all permanent easements, consists of 24.8 acres. Pre and post-development hydrologic characteristics are summarized below in Table 4.3. Initial geotechnical investigations reveal a soil infiltration rate of 0.01 inches per hour with site soils classified as Hydrologic Soil Group C.

	Pre-Development	Post-Development
Project Area (acres)	24.80	24.80
Land Cover	Unimproved Grass Cover	11.28 acres impervious cover
Impervious Percentage	0	45

Table 4.3. Hydrologic Characteristics of Example Project Site

Step 1. Determine Permanent Pool Volume of the Basin as a Function of the Project Site Water Quality Volume

The project site water quality volume is a function of the developed impervious area. This basic water quality volume is computed as follows:

$$WQV = \frac{IA \times \frac{1}{2} in}{12 \frac{in}{ft}}$$

IA= Impervious Area (square feet)

For a retention basin serving a contributing drainage area comprised of 45 percent impervious cover, the permanent pool volume should be a minimum of four times the computed water quality volume (reference Table 4.1).

The demonstration project site is comprised of a total drainage area of 24.80 acres. The total impervious area within the project site is 11.28 acres. Therefore, the water quality volume is computed as follows:

$$WQV = \frac{11.28ac \times 43{,}560 \frac{ft^2}{ac} \times \frac{1}{2} in}{12 \frac{in}{ft}} = 20{,}473.2\, ft^3$$

The basin permanent pool volume is computed as:

$$4 \times 20{,}473.2\, ft^3 = 81{,}893\, ft^3$$

Step 2. Allocate the Computed Permanent Pool Volume into Regions of Varying Depth

The greatest pollutant removal efficiency of a retention basin is achieved when the surface area of the permanent pool is allocated to the regions of varying depth as shown in Table 4.2; however, initially, the total surface area of the basin permanent pool is unknown. The following steps illustrate the design process for sizing each of the three depth zones.

Approximately 15 percent of the total surface area of the permanent pool should be dedicated to depths ranging between zero and 18 inches. This depth zone may include or be comprised entirely of the aquatic bench, if one is proposed. Depths ranging between 18 and 24 inches should comprise an additional 15 percent of the total basin surface area. The remaining 70 percent of the basin surface area should be made up of deep water ranging in depth from 2 to 6 feet.

The total surface area of the basin is designated as *A*. Following this convention, the surface area of each depth zone can be expressed as follows:

$$A_1 = 0.15A$$
$$A_2 = 0.15A$$
$$A_3 = 0.70A$$

The average depth of zone A_1 ranges between zero and 18 inches. The 9 inch average depth can be employed as the zone's effective depth for purposes of volume calculations. Therefore, the total volume encompassed by the basin's shallowest pool zone is approximated as follows:

$$V_1 = 9in \times \frac{1ft}{12in} \times A_1 = (0.75\, ft)(0.15)(A)$$

Similarly, the effective depth of zone A_2 is computed as:

$$D_{e_2} = \frac{18in + 24in}{2} = 21in$$

The total volume encompassed by the basin's intermediate depth zone is approximated as follows:

$$V_2 = 21in \times \frac{1ft}{12in} \times A_2 = (1.75\,ft)(0.15)(A)$$

The deep water regions of the basin range in depth from 2 to 6 feet. Therefore the effective depth of zone A_3 is 4 feet and the volume is expressed as:

$$V_3 = 4\,ft \times A_3 = (4\,ft)(0.70)(A)$$

The sum of all incremental pool volumes must equal or exceed the previously established permanent pool volume of 4xWQV. Therefore, the basin surface area, *A*, is approximated as follows:

$$V = 81{,}893\,ft^3$$
$$V = (0.75\,ft)(0.15)(A) + (1.75\,ft)(0.15)(A) + (4\,ft)(0.70)(A)$$

Rearranging and solving for surface area, *A*:

$$3.175A = 81{,}893\,ft^3$$
$$A = 25{,}793\,ft^2$$

Table 4.4 summarizes the minimum surface area and approximate volume of each depth zone.

Zone / Depth	Surface Area (ft^2)	Approximate Volume (ft^3)
Shallow (0 - 18")	3,869	2,902
Intermediate (18 - 24")	3,869	6,771
Deep (2 - 6')	18,055	72,220*
Total	***25,793***	***81,893***

*Includes sediment forebay volume(s)

Table 4.4. Summary of Varying Depth Zones

It is noted that the permanent pool surface area of 25,793 ft^2 exceeds 20,000 ft^2. Therefore, the inclusion of an aquatic bench is required for purposes of safety.

Step 3. Estimate Total Land Area of the Retention Basin

The total proposed surface area of the basin permanent pool is 25,793 ft^2. This represents 2.4 percent of the total basin drainage area of 24.8 acres. Typically, the total surface area of a retention basin permanent pool will range between one and three percent of the total drainage area (FHWA, 1996).

At this point, to determine basin feasibility, the designer must consider the land area required for construction of the basin. Factors to examine include land acquisition costs, availability of right-of-way, and site topography. In addition to the area required for the basin permanent pool, area must be provided for flood control storage, freeboard, and the required 20-foot vegetated buffer strip that must occupy the basin periphery.

Applying the Modified Rational method (presented in detail in *Chapter 2 – Dry Extended Detention Basin*) we estimate the volume required to provide peak runoff rate reduction for the 10-year return frequency storm:

Peak pre-development runoff,	q_{10} =	23.8 cfs
Peak post-development runoff,	Q_{10} =	43.2 cfs
Critical duration storm,	T_d =	23.5 minutes
Estimated detention volume,	V_{10} =	33,978 ft^3

In this example, we will consider a basin of rectangular orientation, with a 2.5:1 length-to-width ratio. The demonstrated methodology is applicable to basins of other geometries. However, the results are only estimates of the total land area required for the basin.

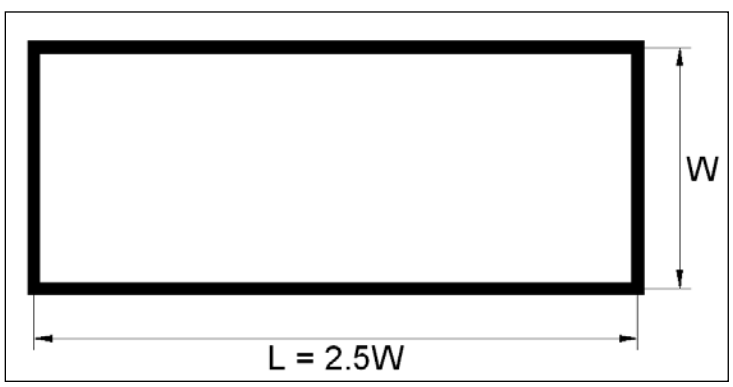

Figure 4.3. Schematic Basin Configuration

The dimensions of the basin permanent pool can then be approximated by solving the following expression:

$$W \times 2.5W = 25{,}793\, ft^2$$
$$W = 101.6\, ft$$
$$L = 254\, ft$$

The volume of flood control storage provided above the permanent pool can be approximated by the following equation:

$$V = \left(\frac{A_1 + A_2}{2} \right) d$$

V = volume of flood control storage (ft^3)
A_1 = surface area of permanent pool (25,793 ft^2)
A_2 = surface area above permanent pool dedicated to flood control storage
d = incremental depth between A_1 and A_2

Surface area, A_2, can be expressed as a function of depth, d:

$$A_2 = [101.6 + (2)(d)(Z)] \times [254 + (2)(d)(Z)]$$

Z = basin side slopes (ZH:1V)

In this example, we will consider that the basin side slopes are 3H:1V. The updated A_2 expression then becomes:

$$A_2 = [101.6 + (2)(d)(3)] \times [254 + (2)(d)(3)]$$

A total flood control volume of 33,978 ft^3 must be provided above the surface of the permanent pool. At this point, the designer can construct a plot of storage versus depth by employing the previously developed expression for volume, *V*. This plot is shown in Figure 4.4.

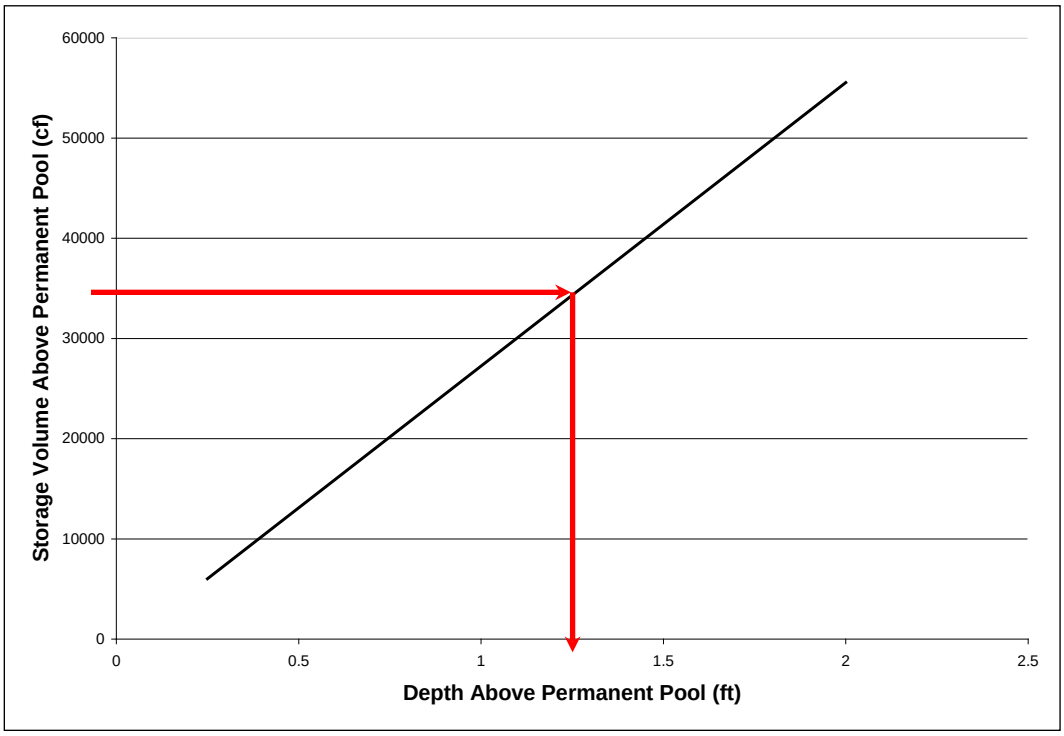

Figure 4.4. Plot of Storage Volume Versus Depth Above Permanent Pool

The plot indicates that the flood control storage is provided at an approximate depth of 1.25 feet above the permanent pool. This estimate can be verified as follows:

$$A_2 = [101.6 + (2)(1.25)(3)] \times [254 + (2)(1.25)(3)] = 28{,}530\ ft^2$$

The total storage volume provided above the permanent pool is then computed as:

$$V = \left(\frac{25{,}793 + 28{,}530}{2}\right)1.25 = 33{,}952\ ft^3$$

The volume is very close to the required storage volume of 33,978 ft^3, and is deemed adequate for the total basin land area estimate.

Maintaining the 2.5:1 length-to-width ratio, we now compute the surface area of the basin as:

$$W \times 2.5W = 28{,}530\ ft^2$$
$$W = 106.8\ ft$$
$$L = 267\ ft$$

Next, the required freeboard must be considered. The required freeboard depths under 100-year conditions are as follows (per DCR minimum standards):

- When equipped with an emergency spillway, the basin must provide a minimum of one foot of freeboard from the maximum water surface elevation arising from the 100-year event and the lowest point in the embankment (excluding the emergency spillway itself).

- When no emergency spillway is provided, a minimum of two feet of freeboard should be provided between the maximum water surface elevation produced by the 100-year runoff event and the lowest point in the embankment.

We will assume that the basin is to be equipped with an emergency spillway and that approximately 0.5 feet of head is observed on the crest of the emergency spillway during conveyance of the 100-year event. At this point, these values are only estimates. The procedures detailed in *Chapter Two – Dry Extended Detention Basin* must be employed to determine the actual basin stage – storage relationship.

The freeboard depth (one foot) and the head on the emergency spillway (0.5 feet) increase the basin length and width as follows:

$$W = 106.8\,ft + (2)(3)(1.5\,ft) = 115.8\,ft$$
$$L = 267\,ft + (2)(3)(1.5\,ft) = 276\,ft$$

Finally, we must consider the required minimum 20-foot vegetated buffer located around the basin periphery. Adding this buffer width to the basin length and width results in the approximate basin surface dimensions shown in Table 4.5.

Length	156 ft	
Width	316 ft	
Area	49,296 ft^2	1.13 ac

Table 4.5. Basin Surface Dimensions

Step 4. Development of Stage – Storage Relationship

Having determined the required surface area and storage volume for the basin permanent pool, flood storage volume, and freeboard we move on to the next step of constructing a stage – storage relationship. Each site is unique, both in terms of constraints and required storage volume. Because of this, the development of a proposed basin grading plan may be an iterative process. The stage storage volume relationship for the example basin is shown in Figures 4.5 and 4.6. The basin floor is assumed to be at elevation 2000 MSL. Upon development of the basin stage – storage relationships, the next step(s) are to design and evaluate the basin for flood (peak rate) control. The reader is referred to *Chapter Two – Dry Extended Detention Basin*, Steps 6 – 8 for detailed methodology on these topics.

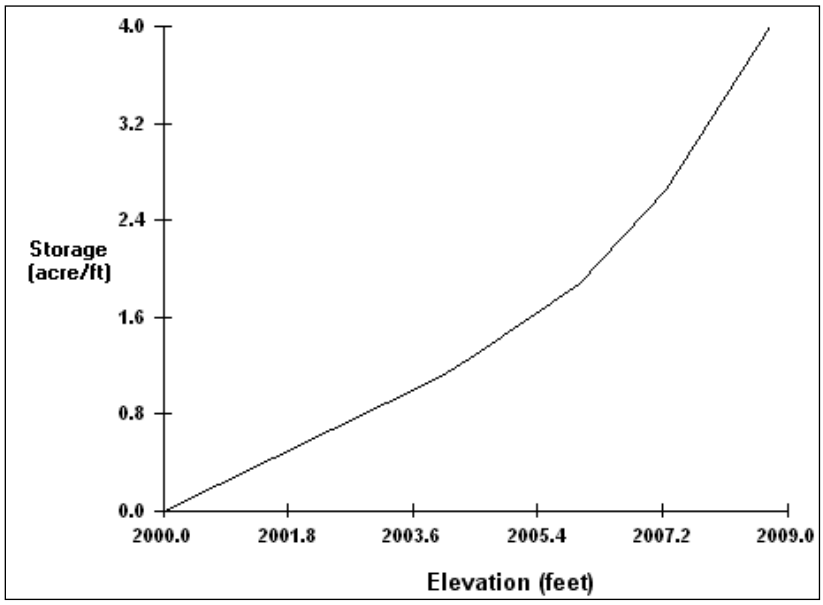

Figure 4.5. Retention Basin Stage – Storage Relationship

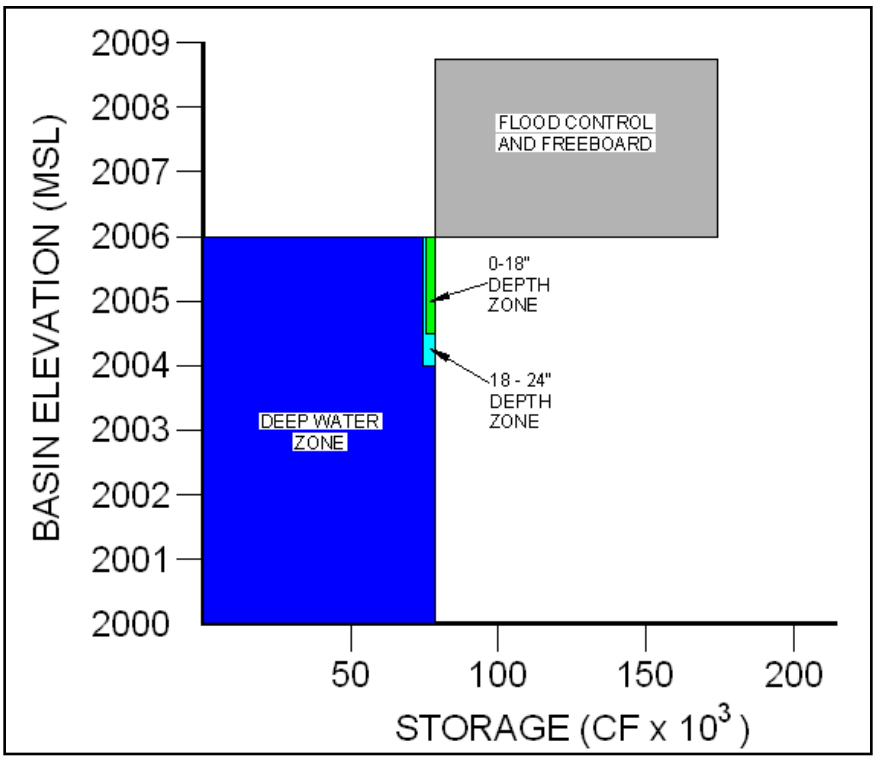

Figure 4.6. Graphical Depiction of Varying Depth Zones – Permanent Pool and Flood Control Storage

Step 5. Design of the Submerged Release Outlet

A retention basin must be equipped with a means by which baseflow can pass through the basin without accumulating and encroaching upon the volume of storage allocated to flood control. This conveyance is typically accomplished by a submerged, inverted pipe as shown in Figure 4.7.

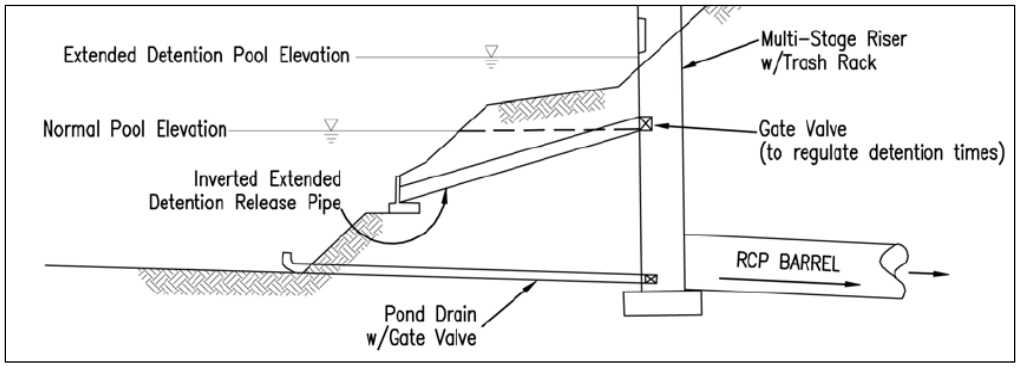

Figure 4.7. Schematic Retention Basin Outlet Configuration
Virginia Stormwater Management Handbook, 1999, Et seq.)

Generally, the highest quality of water in a retention basin is found at or near the surface of the permanent pool. In addition to the low levels of dissolved oxygen found near the basin floor, there are also potentially high levels of pollutants which have accumulated through gravitational settling. Though the pollutant levels near the pool surface tend to be lower than at points of greater depth in the water column, the water temperature tends to be higher. This elevated temperature arises from both solar heating and the influence of heated stormwater inflow. The release of heated runoff to downstream receiving channels may be detrimental to fish and other aquatic species inhabiting those channels. Consequently, a release depth of approximately 18 inches is recommended. (Virginia Stormwater Management Handbook, (DCR, 1999, Et seq.).

The first step in computing the required outlet size is to establish the maximum anticipated baseflow which must be conveyed through the basin once the permanent pool volume is present. This maximum baseflow arises during the month exhibiting the highest average precipitation. The Virginia State Climatology Office maintains an online database with monthly climate information from various stations across the state. This information can be obtained at: *http://climate.virginia.edu/online_data.htm#monthly*

Examining this data for the Staunton station, we see that the month exhibiting the highest average precipitation total is September, with *3.91 inches*.

This precipitation total must now be converted into a runoff rate. This is accomplished by first employing the NRCS runoff depth equation.

The post-development site is comprised of a total of 24.8 acres, 11.2 acres of which is impervious and 13.6 acres of which is unimproved grass cover. Appendix 6H-3 and 6H-4 of the VDOT Drainage Manual contain runoff curve numbers for various land covers and Hydrologic Soil Groups.

The site Hydrologic Soil Group is *C*. Because the site pervious cover is grass in fair condition, the runoff curve number taken from Appendix 6H-3 is *79*. The curve number for the site impervious fraction is *98*.

Next, the 2-year 24-hour precipitation depth must be obtained in order to estimate the average runoff efficiency. This information can be obtained from the National Weather Service at:

http://hdsc.nws.noaa.gov/hdsc/pfds/orb/va_pfds.html

Examining this data for the Staunton station reveals the 2-year 24-hour precipitation depth, *P*, to be *2.86 inches*.

Next, the NRCS runoff depth equations are employed to determine the 2-year 24-hour runoff depth for the post-developed site:

Pervious Fraction

$$S = \frac{1000}{CN} - 10 = \frac{1000}{79} - 10 = 2.66$$

$$Q = \frac{(P - 0.2S)^2}{(P + 0.8S)} = \frac{(2.86 - (0.2)(2.66))^2}{(2.86 + (0.8)(2.66))} = 1.09 inches$$

Impervious Fraction

$$S = \frac{1000}{CN} - 10 = \frac{1000}{98} - 10 = 0.20$$

$$Q = \frac{(P - 0.2S)^2}{(P + 0.8S)} = \frac{(2.86 - (0.2)(0.20))^2}{(2.86 + (0.8)(0.20))} = 2.63 inches$$

The total depth of runoff over the entire developed site is then computed as:

$$\frac{(1.09 inches)(13.6 acres) + (2.63 inches)(11.2 acres)}{24.8 acres} = 1.79 inches$$

The Efficiency of Runoff, *E*, is computed as the ratio of runoff depth to the total depth of precipitation for the 2-year event:

$$E = \frac{1.79 in}{2.86 in} = 0.63$$

Employing this efficiency ratio, we can estimate the average runoff volume for the month of September as:

$$3.91 inches \times 0.63 \times \frac{1 ft}{12 in} \times 24.8 ac \times \frac{43{,}560\, ft^2}{ac} = 221{,}756\, ft^3$$

The average baseflow rate is then computed as:

$$\frac{221{,}756\,ft^3}{30days} \times \frac{1day}{24hour} \times \frac{1hour}{3{,}600\sec} = 0.09cfs$$

The elevation at which the baseflow bypass outlet begins to discharge from the basin must be set equal to the basin elevation corresponding to the permanent pool volume. This ensures that the permanent pool volume is maintained in the basin at all times, while perennial baseflow is passed through the principal spillway and does not accumulate in the basin. Referencing Figures 4.5 and 4.6, we see that the permanent pool volume occurs at basin elevation 2006. The crest of the baseflow bypass outlet is therefore set at 2006 and sized as follows:

We will initially try a 3-inch diameter orifice, and restrict the maximum head to that occurring just as the outlet becomes submerged. Employing the orifice equation:

$$Q = Ca\sqrt{2gh}$$

Q = discharge (cfs)
C = orifice coefficient (0.6)
a = orifice area (ft^2)
g = gravitational acceleration (32.2 ft/sec^2)
h = head (ft)

$$a = \pi r^2 = \pi \times \left(\frac{3in/2}{\frac{12in}{ft}} \right)^2 = 0.049\,ft^2$$

The head is measured from the centerline of the orifice. The head when the orifice has just become submerged by a small increment, 0.01 ft, is expressed as:

$$h = 1.5inches \times \frac{1\,ft}{12in} + 0.01\,ft = 0.135\,ft$$

Discharge is now computed as:

$$Q = (0.6)(0.049)\sqrt{(2)(32.2)(0.135)} = 0.09cfs$$

The selected 3-inch diameter orifice appears ideally suited for conveying the basin perennial baseflow.

Step 6. Embankment Design

When a stormwater impounding facility exceeds 15 feet in height or, as is the case with a retention basin, holds a permanent pool of water, the earthen embankment must be comprised of homogenous material with seepage controls or zoned embankments. The following steps provide guidance in designing a zoned embankment.

The steps presented in this example *do not* apply to embankments whose height exceed 25 feet and exhibit a maximum storage capacity of 50 acre feet or more. Such an embankment may be regulated under the Virginia Dam Safety Act, Article 2, Chapter 6, Title 10.1 (10.1-604 et seq.) of the Code of Virginia and Dam Safety Regulations established by the Virginia Soil and Water Conservation Board (VS&WCB). As previously stated, a retention basin embankment may be excluded from regulation if it meets any of the following criteria:

- is less than six feet in height
- has a capacity of less than 50 acre-feet and is less than 25 feet in height
- has a capacity of less than 15 acre-feet and is more than 25 feet in height
- will be owned or licensed by the Federal Government

The design and construction of an earthen embankment is a complex process, and is inherently site-specific. Such a design must consider all unique site constraints, the characteristics of both native and imported construction materials, and the downstream hazard potential should the embankment fail. It is the engineer's responsibility to evaluate all of these considerations, including the potential for significant property damage and/or loss of life in the event of embankment failure. The guidance presented in this example does not constitute a standard or specification, and is not intended to replace the need for a thorough site investigation whenever a stormwater impounding facility is proposed.

The Virginia Stormwater Management Handbook, (DCR, 1999, Et seq.) defines a zoned embankment as containing a central impervious core, flanked by zones of more pervious material called shells. The pervious shells serve the function of enclosing, supporting, and protecting the impervious core. Often, the pervious shells are comprised of native site materials while the impervious core, comprised of material with very low permeability, is imported.

The first element in the design of an earthen embankment is that of a cutoff trench. The cutoff trench should be situated along the centerline of the embankment, or slightly upstream of the centerline. Along the width of the embankment, the trench should extend up the embankment abutments to a point coinciding with the 10-year water surface elevation.

When a zoned embankment is proposed, the cutoff trench material should be identical to that of the embankment core. The trench bottom width and depth should be no less than four feet, and the trench slopes should be no steeper than 1H:1V. (Virginia Stormwater Management Handbook (DCR, 1999, Et seq.) Figure 4.8 illustrates the *minimum* cutoff trench size configuration.

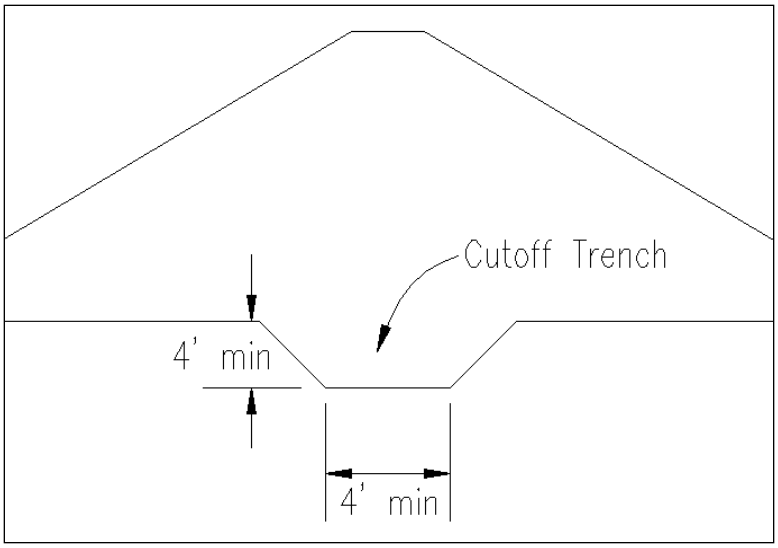

Figure 4.8. Typical Cutoff Trench Configuration

It must be noted that the dimensions shown in Figure 4.8 are absolute minimum values. Typically, as the ponded depth (and resulting hydraulic head) in a basin increase the bottom width of the trench should also increase. This increase in trench width may be reduced if the depth of the trench is also increased. The U.S. Bureau of Reclamation publication *Design of Small Dams* (revised 1977) gives the following relationship between head in the basin, trench width, and trench depth:

$$w = h - d$$

w = bottom width of cutoff trench
h = reservoir head above ground surface
d = depth of cutoff trench excavation below ground surface

The example basin permanent pool occurs at a basin depth of 6 feet (reference Figure 4.6). Fixing the cutoff trench depth as four feet and employing the trench width equation:

$$w = 6\,ft - 4\,ft = 2\,ft < \text{Minimum } 4\text{ ft}$$

Retention basins whose primary function is water quality improvement and flood control should typically exhibit permanent pool depths of less than 8 feet. Consequently, the minimum cutoff trench width and depth dimensions of four feet are generally adequate. However, when a proposed basin pool depth increases beyond the typical range, consideration should be given to increasing the dimensions of the embankment cutoff trench.

The next consideration is sizing the zones of the embankment. When a cutoff trench is provided, as required for a retention basin, sizing of the embankment zones should adhere to the guidelines illustrated in Figure 4.9.

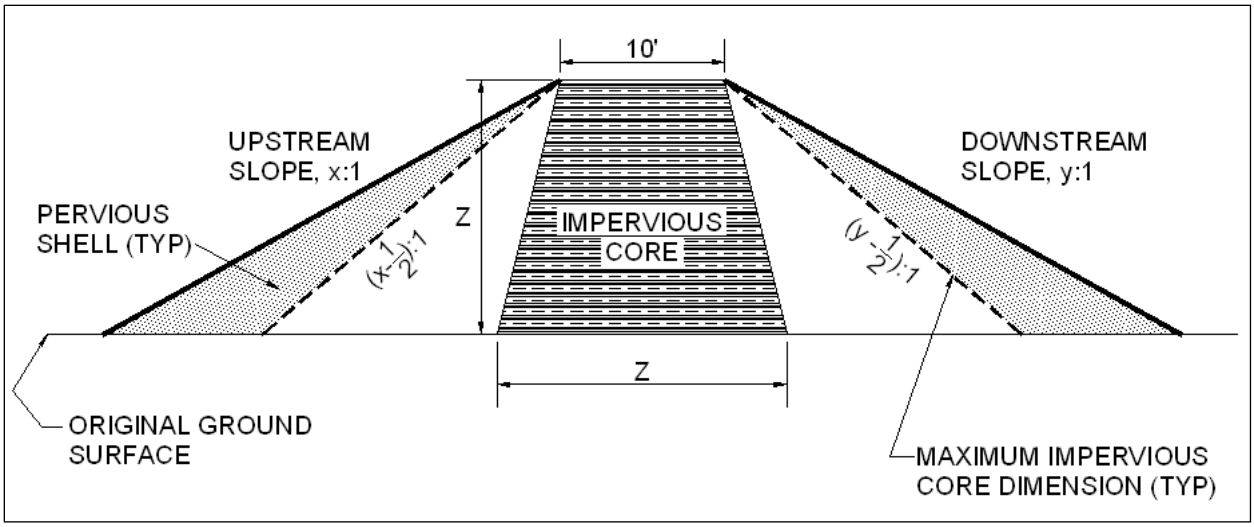

Figure 4.9. Minimum and Maximum Size of Embankment Core (U.S. Bureau of Reclamation, 1977)

As illustrated in Figure 4.9, the bottom width of the impervious core should, at a minimum, equal the total embankment height. This ensures that the core width at any basin elevation exceeds the height of embankment remaining above that elevation. Consequently, for all basin elevations, the hydraulic gradient through the core is less than unity and seepage potential is reduced. The maximum size of the impervious core is a function of the embankment's upstream and downstream external slopes. Should the impervious core be sized larger than these guidelines, the stabilization function of the pervious shell would be largely ineffective and, from a stabilization standpoint, the embankment would behave similar to a homogeneous type. (U.S. Bureau of Reclamation, 1977)

In the example problem, the proposed basin height is 9 feet (reference Figures 4.5 and 4.6), which is less than the embankment top width of 10 feet. Constructing the core bottom width equal to the embankment height would result in a negative slope for the sides of the impervious core. Such a configuration is impractical from a construction standpoint. The maximum side slope of the impervious core is a function of the embankment's external slopes, previously established as 3:1. Generally, the construction of the impervious core will require material to be imported to the site. It is both costly and unnecessary to size the core to its maximum dimensions (unless native site soils meet the classification for core material). In the example basin, we will consider impervious core side slopes of 1:1. This configuration is illustrated in Figure 4.10.

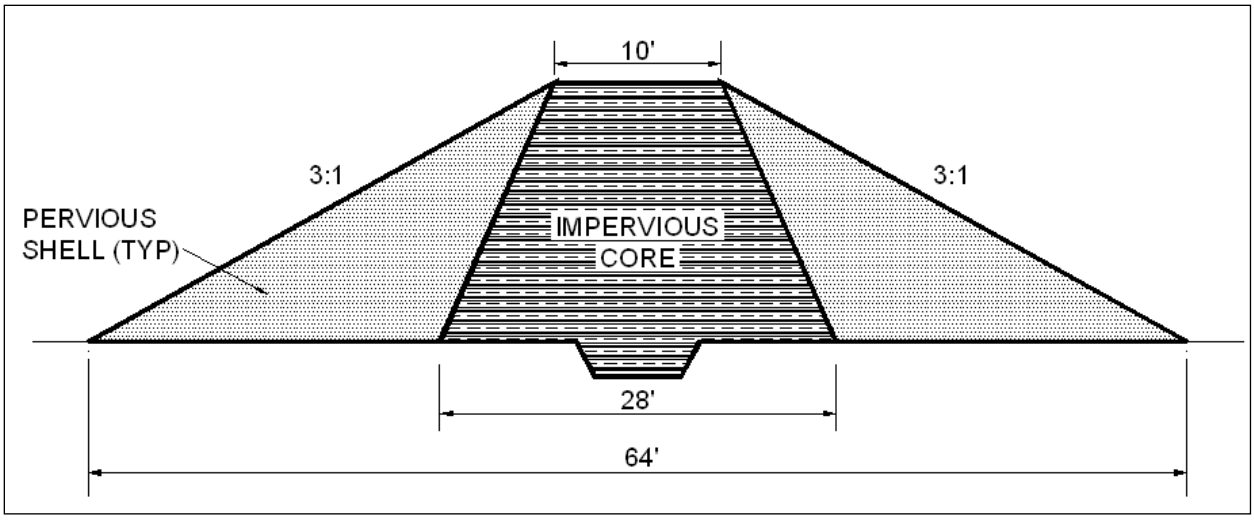

Figure 4.10. Example Basin Embankment Dimensions

Selection of core and pervious flanking material should conform to the Unified Soil Classifications shown in Table 4.6.

Zone	Core Material Classification
Impervious Core	GC, SC, CL*
Pervious Shell	Rockfill, GW, GP, SW, SP

Table 4.6. Suitable Embankment Material (U.S. Bureau of Reclamation, 1977)

* Some materials approved by the U.S. Bureau of Reclamation have been omitted, and those shown are only those approved by the Virginia Department of Conservation and Recreation

When the classification of adjacent zone materials differs significantly, such as a clay impervious core adjoining a rockfill pervious shell, a transition zone is strongly recommended. The transition zone helps to prevent the fines of the core material from piping into the voids of the more pervious material. Additionally, on the embankment's upstream face, should voids or cracks appear in the core, the transition material can often effectively "plug" the voids, thus minimizing seepage. To facilitate ease of construction, the U.S. Bureau of Reclamation recommends that transition zones range between 8 and 12 feet in width; however, the effectiveness of a transition zone only a few feet wide can be significant. Transition zones are not required between impervious material and sand-gravel zones or between sand-gravel zones and rockfill.

The designer is referenced to section 11.3.6 of the VDOT Drainage Manual for additional embankment details and specifications.

Step 7. Water Balance Calculation

To ensure that the basin's permanent pool does not become dry during extended periods of low or absent inflow, the designer must perform a water balance calculation. Note that this water balance evaluation differs from the baseflow calculation made previously. Two approaches are described in the following section.

Step 7A. 45-Day Drought Condition

The first approach considers the extreme condition of a 45-day drought period with no precipitation and thus no significant surface runoff.

Table 4.7 presents potential evaporation rates for various locations in Virginia.

Station	April	May	June	July	August	Sept.
Charlottesville	2.24	3.84	5.16	6.04	5.45	3.87
Danville	2.35	3.96	5.31	6.23	5.69	3.91
Farmville	2.34	3.81	5.13	6.00	5.41	3.71
Fredericksburg	2.11	3.80	5.23	6.11	5.46	3.83
Hot Springs	1.94	3.41	4.50	5.14	4.69	3.33
Lynchburg	2.21	3.72	4.99	5.85	5.31	3.70
Norfolk	2.20	3.80	5.37	6.34	5.79	4.14
Page County	1.68	3.06	4.09	4.71	4.26	3.05
Pennington Gap	2.14	3.59	4.72	5.45	4.97	3.60
Richmond	2.28	3.89	5.31	6.23	5.64	3.92
Roanoke	2.20	3.75	4.99	5.85	5.30	3.67
Staunton	2.00	3.52	4.77	5.52	4.95	3.47
Wash. National Airport	2.13	3.87	5.50	6.51	5.84	4.06
Williamsburg	2.27	3.86	5.23	6.14	5.61	3.97
Winchester	2.07	3.68	4.99	5.82	5.26	3.67
Wytheville	2.01	3.43	4.46	5.17	4.71	3.39

Table 4.7. Potential Evaporation Rates (Inches)
Virginia Stormwater Management Handbook, (DCR, 1999, Et seq.)

The greatest potential evaporation for Staunton occurs during the months of July and August, 5.52 inches and 4.95 inches respectively. Therefore, the total evaporation over a 45-day period is estimated as follows:

Average evaporation per month = $\frac{5.52in + 4.95in}{2} = 5.24in$

Average evaporation per day = $\frac{5.24\frac{in}{month}}{31\frac{day}{month}} = 0.17\frac{in}{day}$

The evaporation loss over a 45-day period is calculated as follows.

$$45\,\text{days}\ X\ 0.17\frac{in}{day} = 7.65in = 0.64\,ft$$

The total surface area of the permanent pool is 25,793 ft^2. Therefore, the total volume of water lost to evaporation is estimated as:

$$25{,}793\,ft^2 \times 0.64\,ft = 16{,}508\,ft^3$$

The volume of water lost to evaporation must be added to that lost to infiltration. As previously stated, the initial geotechnical tests revealed site soil infiltration rates to be 0.01 inches per hour. The infiltration is assumed to occur over the entire permanent pool, whose surface area is 25,793 ft^2. The volume of water lost to infiltration is estimated as:

$$25{,}793\,ft^2 \times 0.01\frac{in}{hr} \times \frac{1\,ft}{12in} \times 24\frac{hr}{day} \times 45days = 23{,}214\,ft^3$$

The total volume of water lost to evaporation and infiltration over the 45-day drought period is therefore computed as:

$$16{,}508\,ft^3 + 23{,}214\,ft^3 = 39{,}722\,ft^3$$

The total volume of the basin permanent pool is 1.88 ac – ft (81,893 ft^3). The estimated evaporation and infiltration loss over a 45-day drought period is slightly less than half of the total permanent pool volume. While the extended drought period does impact the basin pool significantly, a volume of more than twice the project site water quality volume does remain in the basin, and is thus considered adequate against drought.

The volume of runoff necessary to replenish the pool volume is computed as follows:

Total contributing drainage area = 24.8 acres

Stored volume lost to evaporation and infiltration = 39,722 ft^3

$$\frac{39{,}722\,ft^3}{24.8ac \times \frac{43{,}560\,ft^2}{ac}} = .0368\ watershed\text{ - }feet = 0.44\ watershed\text{ - }inches$$

A precipitation event yielding a total runoff of 0.44 inches or more across the contributing watershed will replenish the depleted marsh volume.

Step 7B. Period of Greatest Evaporation (in Average Year)

The second water balance calculation examines impacts on the basin permanent pool during the one-month period of greatest evaporation. This calculation reflects an anticipated pool drawdown during the summer months of an average year. In contrast, the first calculation method reflects an extreme infrequent drought event.

From Table 4.7, the greatest monthly evaporation total for the project site is 5.52 inches in July. The Virginia State Climatology Office reports an average July rainfall for the Staunton station as 3.78 inches (reference Step 5 for link to data).

Applying the previously computed runoff efficiency ratio for the basin watershed, the average July inflow to the basin is computed as:

$$3.78inches \times 0.63 \times \frac{1\,ft}{12in} \times 24.8ac \times \frac{43{,}560\,ft^2}{ac} = 214{,}383\,ft^3$$

Evaporation losses are computed as the product of total monthly evaporation and the surface area of the permanent pool:

$$5.52inches \times \frac{1\,ft}{12in} \times 25{,}793\,ft^2 = 11{,}865\,ft^3$$

Infiltration losses over the entire month of July are estimated as:

$$25{,}793\,ft^2 \times 0.01\frac{in}{hr} \times \frac{1\,ft}{12in} \times 24\frac{hr}{day} \times 31days = 15{,}992\,ft^3$$

The water balance expression and total monthly loss/gains are computed as follows:

Monthly loss/gain = Inflow – Evaporation – Infiltration

$$= 214{,}383\,ft^3 - 11{,}865\,ft^3 - 15{,}992\,ft^3 = 186{,}526\,ft^3$$

The monthly climate data and site land cover characteristics indicate that the basin will not experience drawdown during the average period of highest evaporation.

Step 8. Landscaping

Generally, the non-inundated (dry storage) regions of a retention basin can be landscaped in the same manner as a dry basin (reference *Chapter Two – Dry Extended Detention Basin)*; however, careful attention must be given to the types of vegetation selected for the basin pool and aquatic bench areas. For these regions, the vegetative species must be selected based on their inundation tolerance and the anticipated frequency and depth of inundation.

The regions of varying depth within the basin are broadly categorized by zone as shown in Figure 4.11. Note the basin aquatic bench would be encompassed by Zone 2.

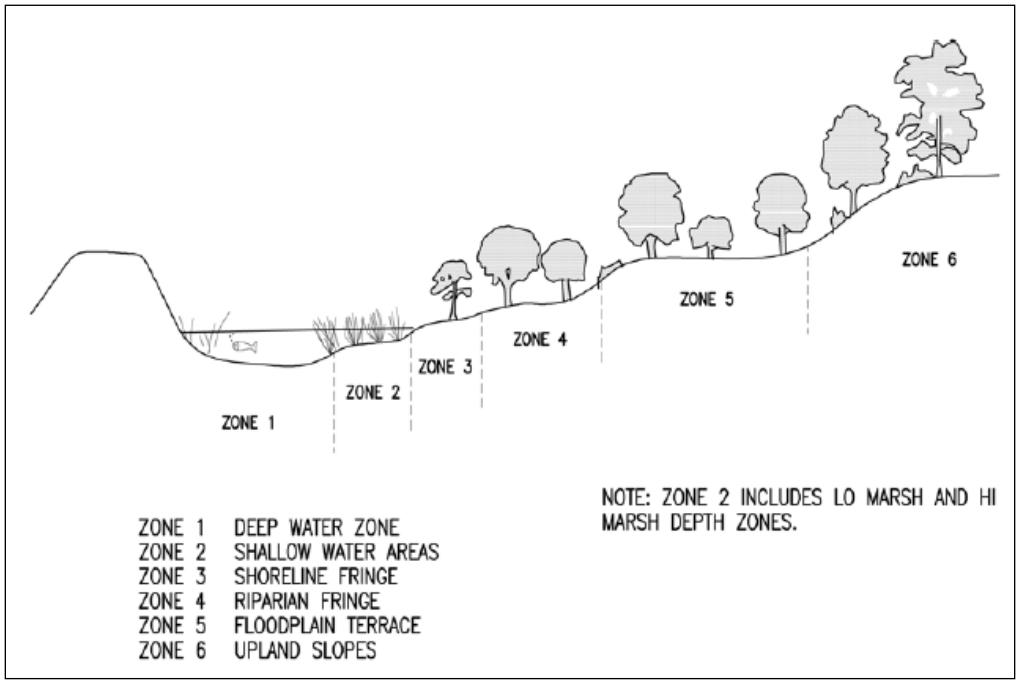

Figure 4.11. Planting Zones for Stormwater BMPs
Virginia Stormwater Management Handbook (DCR, 1999, Et seq.)

Suitable planting species for each of the zones identified in Figure 4.11 are recommended in Chapter 3-05 of the Virginia Stormwater Management Handbook, (DCR, 1999, Et seq.). Ultimately, the choice of planting species should be largely based on the project site's physiographic zone classification. Additionally, the selection of plant species should match the native plant species as closely as possible. Surveying a project site's native vegetation will reveal which plants have adapted to the prevailing hydrology, climate, soil, and other geographically-determined factors. Figure 3.05-4 of the Virginia Stormwater Management Handbook provides guidance in plant selection based on project location.

Generally, stormwater management basins should be permanently seeded within 7 days of attaining final grade. This seeding should comply with Minimum Standard 3.32,

Permanent Seeding, of the Virginia Erosion and Sediment Control Handbook, (DCR, 1992, Et seq.). It must be noted that permanent seeding is *prohibited* in Zones one through four of Figure 4.11. The use of conventional permanent seeding in these zones will result in the grasses competing with the requisite wetland emergent species.

When erosion of basin soil prior to the establishment of mature stand of wetland vegetation is a concern, temporary seeding (Minimum Standard 3.31) of the Virginia Erosion and Sediment Control Handbook, (DCR, 1992, Et seq.) may be considered. However, the application rates specified should be reduced to as low as practically possible to minimize the threat of the temporary seeding species competing with the chosen emergent wetland species.

All chosen plant species should conform to the American Standard for Nursery Stock, current issue, and be suited for USDA Plant Hardiness Zones 6 or 7, see Figure 4.12.

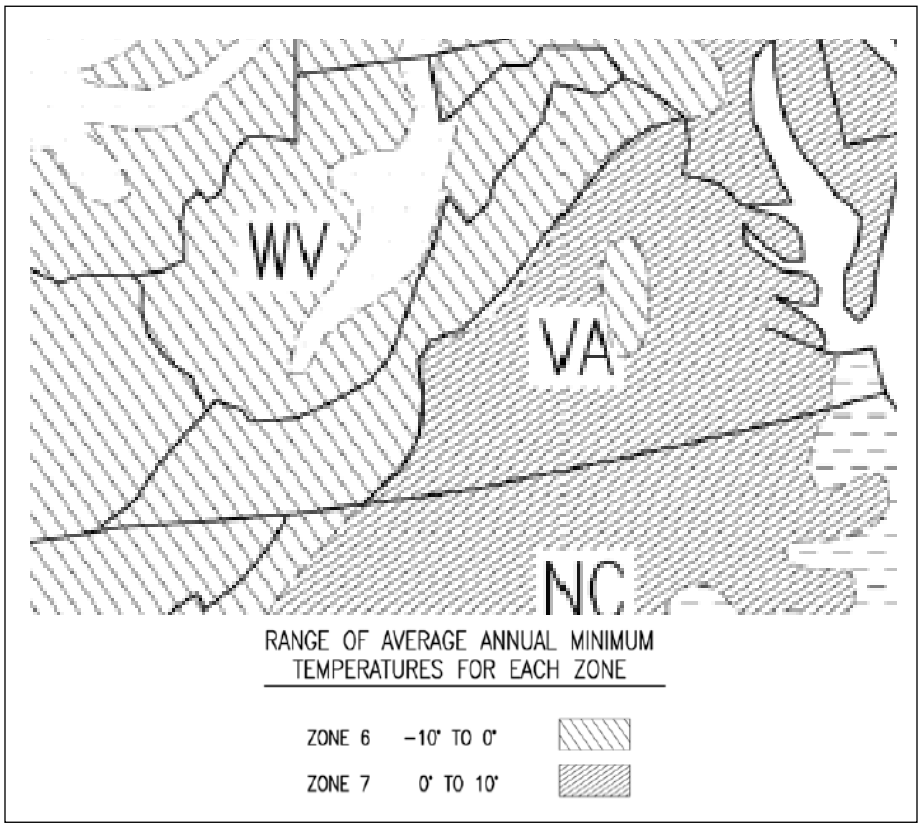

Figure 4.12. USDA Plant Hardiness Zones

Under no circumstances should trees or shrubs be planted on the basin embankment. The large root structure may compromise the structural integrity of the embankment.