APPENDIX J – TRAFFIC BARRIER INSTALLATION CRITERIA

(Appendix J has been rewritten to incorporate the information from Appendix I and shading has been omitted. Rev. 1/21)

TABLE OF CONTENTS

SECTION J-1 INTRODUCTION

Introduction J-1

SECTION J-2 BARRIER SYSTEMS AND TERMINALS

Guardrail General Guidance J-2
GR-MGS1, 1A Strong Post W-Beam Guardrail J-3
GR-2 Strong Post W-Beam Guardrail J-3
GR-8 Weak Post W-Beam Guardrail J-4
MB-3 Strong Post Median Barrier W-Beam Guardrail J-4
MB-5 Weak Post Median Barrier W-Beam Guardrail J-4
GR-3 Low Tension Cable Guardrail J-4
GR-MGS4 Strong Post Transition from MGS1 to GR-2 W-Beam Guardrail J-4
GR-10 Guardrail over Low Fill Culverts J-5
Thrie-Beam Bull Nose Barrier J-6
High Tension Cable J-7
GR-MGS2 W-Beam Tangent Terminal J-7
GR-MGS3 W-Beam Run Off Only Terminal J-7
GR-6 W-Beam Buried in the Cut, or Back, Slope Terminal J-7
GR-7 W-Beam Flared Terminal J-8
GR-8 Weak Post W-Beam Guardrail Run-Off only Terminal J-9
GR-9 W-Beam Tangent Terminal J-9
GR-11 W-Beam Run-off Only Terminal J-9
Concrete Barrier General Guidance J-10
Concrete Barrier (Permanent) J-11
Concrete Barrier (Temporary – NOT FOR PERMANENT INStALLATION) J-11
Concrete Barrier Terminals J-12
Impact Attenuators – General Guidance J-12

SECTION J-3 BARRIER INSTALLATION CRITERIA

Barrier Warrants J-15
Fixed Objects within Deflection Area J-17
Ponds or Other Bodies of Water J-17
Sound Barrier Walls J-18
Barrier Type Selection J-20
Determining Location of the Ends of Guardrail J-23
Slopes for Barriers J-24
Asphalt Paving Under Guardrail J-24
Asphalt Curbs J-25
Guardrail Installation in Rock J-25
Guardrail Installation Adjacent to Curb J-25
Pavement Drop-offs with Guardrail J-31
Radial Guardrail J-31
Radial End Treatments Versus Radial Guardrail J-31

SECTION J-4 FIXED OBJECT ATTACHMENTS (FOA) and BRIDGE GUARDRAIL ATTACHMENTS (BRGR)
FOA J-33
BRGR J-33
Entrances or Connections Adjacent to a Bridge J-34

SECTION J-5 SAFETY / MAINTENANCE PROJECTS J-35

LIST OF FIGURES

Figure J-2-1 General Impact Attenuator Area J-14
Figure J-3-1 Barrier Length of Need Determination J-23
Figure J-3-2 Typical Curb Offset Layout for a Tangent Guardrail Terminal J-26
Figure J-3-3 GR-FOA 5 & Typical Curb Offset Layout for a Tangent Guardrail Terminal at a Bridge with A Sidewalk J-27
Figure J-3-4 Special Design FOA (Modified FOA-1) & Typical Curb Offset for a Tangent Guardrail Terminal at a Bridge with a Sidewalk J-28
Figure J-3-5 GR-FOA 5 & Typical Curb Offset Layout for a Tangent Guardrail Terminal at a Bridge with a Shared Use Path J-29
Figure J-3-6 Special Design FOA (Modified FOA-1) and Typcial Curb Offset for a Tangent Guardrail Terminal at a Bridge with a Shared Use Path J-30

LIST OF TABLES

Table J-3-1 Embankment Heights J-15
Table J-3-2 Typical Fixed and Hazardous Objects Within the CleaR Zone J-16
Table J-3-3 Typical Mash Barrier Selection And Placement J-21
Table J-3-4 Design Parameters for Roadside Barrier Layout J-24

SECTION J-1 INTRODUCTION

INTRODUCTION

Traffic Barriers and their associated terminals discussed in this appendix must meet AASHTO's **MASH** (Manual for Assessing Safety Hardware) or **NCHRP 350** (National Cooperative Highway Research Program) requirements. They do not prevent collisions or injuries from occurring and should only be used where the result of striking a fixed object hazard or leaving the roadway would be more severe than the consequence of striking the barrier. The roadway should be examined to determine the feasibility of adjusting site features so that the barrier will not be required (e.g. flattening a fill slope, removing or relocating a hazardous object such as a drainage headwall, sign support, etc.). The initial cost to eliminate the need for a barrier may appear excessive; however, the fact that a barrier installation will require maintenance costs for many years should not be overlooked.

When guardrail is wholly or partially within the project limits for any construction project, including heavy maintenance and RRR projects, Traffic Engineering Division shall perform a guardrail assessment on all existing guardrail systems and components including terminals. Refer to Traffic Engineering Division IIM-TE-366 and IIM-TE-367. Unless Traffic Engineering Division determines that the guardrail can be eliminated, the guardrail shall be upgraded to the latest standard in accordance with current VDOT Road and Bridge Standards for the following situations:

1. **When located within the project limits of a construction project**. When the line of rail extends outside the project limits with more than 60% of the existing substandard line of rail within the project limits, then the entire run shall be replaced including terminals and upgraded to meet the current Standards. If less than 60% is within the project limits, then only the rail within the project limits is to be upgraded. Consideration should be given to upgrading the entire line of rail even when less than 60% is within the project limits.

2. **When located within the project limits of transportation improvements associated with permitted land development projects.**

3. **When any road is accepted into the state roadway system, all guardrail must comply with current Standards. (For VDOT approved Developer Construction Plans, the Secondary Street Acceptance Requirements (SSAR) govern.)**

For definitions of RRR utilizing Federal Funding on National Highway System (NHS) Roadways, see Appendix A4 Guidelines for RRR Projects.

SECTION J-2 BARRIER SYSTEMS AND TERMINALS

GUARDRAIL GENERAL GUIDANCE

During **NEW CONSTRUCTION**, always install to the current VDOT Standards.

New and existing guardrail and terminals within the project limits must meet **MASH** requirements except when there is no approved **MASH** system for the particular circumstance. The use of an **NCHRP 350** Standard in place of a **MASH** Standard will require a design waiver unless noted in this section for a specific Standard. A guardrail transition must be used to connect a **MASH** system to an **NCHRP 350** system that meets the current Standards.

Guardrail terminals are to be provided for all installations regardless of "Functional Classification". Terminals develop the necessary tension at the end of the system in order to redirect a vehicle and, if hit, minimize the damage to a vehicle and its occupants. The termini of guardrail must be designed and located so there are no exposed blunt ends that a vehicle could impact.

New and existing terminals within the project limits must meet **MASH** requirements except as noted in the terminal descriptions within this Section. Those that are not within project limits but are part of a length of barrier that has 60% within the project limits (see **Section J-1**) must also meet **MASH** requirements. All terminals shall be installed as they were tested in accordance with **MASH**. Lapping of the rail within guardrail terminals must be in accordance with the manufacturer's instructions regardless of adjacent traffic direction.

A site investigation shall be made to determine whether a terminal should be upgraded, or eliminated. For gaps between two runs of guardrail approximately 200' or less, closing the gap by continuing the run of guardrail is recommended, thereby eliminating the need for a terminal. Verify that the guardrail is still necessary. If it is, verify the LON (Length of Need).

Radial guardrail is not to be used in place of a **MASH** OR **NCHRP 350** approved terminal section. Radial terminal sections that exist within the project limits shall be upgraded to an approved terminal section. Refer to **Section J-3** for additional guidance.

Before replacing a substandard terminal, the location of the existing terminal shall be checked to ensure sufficient length of need has been provided in the run of guardrail to adequately shield the hazard for which it was installed. In some cases it may be necessary to extend the guardrail to better shield the hazard or to provide for a more suitable site that would not require grading.

The site preparation for all installations shall be in accordance with current Standards and manufacturers' requirements.

All w-beam guardrail panels shall be lapped in the direction of traffic. With two-way traffic, the laps on the right side of traffic are to be in the direction of traffic or toward the downstream end.

Refer to the current Road and Bridge Standards for transition designs between flexible and more rigid systems.

Roadside safety devices are to be equipped with identification stamps as per Code of Virginia *§33.2-274.1.*

GUARDRAIL SYSTEMS

GR-MGS1, 1A STRONG POST W-BEAM GUARDRAIL

GR-MSG1, 1A meets **MASH** requirements.

For GR-MSG1, the minimum height is 30" to the top of the rail with a maximum height of 32". When checking the height on a length of GR-MSG1, measure at increments of 50' at a post. Refer to the current Standards for measuring w-beam guardrail height. Only W6x9 or W6x8.5 steel posts are allowed. Blockouts can be 12"Dx6"Wx14"H wood or composite and are to be all wood or all composite within a single run of guardrail for new installations. Blockouts used for repairs can be either wood or composite regardless of the existing blockout material. Other blockouts not noted must be from the VDOT approved products list. Wood blockouts shall include routing to prevent the blockout from rotating on the posts.

When posts are removed and are to be reused, the posts shall meet the current standard length. They shall be reused only with standard wood or composite blockouts. When resetting rail, the posts shall be removed and the holes backfilled prior to reinstalling the posts. The height of the rail shall be measured to ensure it meets the current Standard.

See **Section J-3** for guardrail installation adjacent to curb.

GR-2 STRONG POST W-BEAM GUARDRAIL

GR-2 meets **NCHRP 350** requirements. A design waiver is required for any new installations. It is to be maintained/replaced per current policy noted in **Section J-1**.

For GR-2, the minimum height is 27 3/4" to the top of the rail with a maximum height of 28 3/4". When checking the height on a length of GR-2, measure at increments of 50' where there is a rail splice at a post. Refer to the GR-INS Standard for measuring w-beam guardrail based on location on a slope.

The wood or composite blockouts can be used within a single run of guardrail for new installations. Blockouts used for repairs and upgrades can be either wood or composite regardless of the existing blockout material. When existing 6"x8" wood or composite blockouts are replaced, the blockouts shall include routing to prevent blockouts from rotating. When wood posts with wood blockouts are used, they shall have TWO nails (one on each side) to prevent rotation of blockouts. No metal blockouts are to be replaced in-kind or installed new, and no washers will be used.

When posts are removed and are to be reused, the post shall meet the current standard length. They shall be reused only with standard wood or composite blockouts. When resetting rail, the posts shall be removed and the holes backfilled prior to reinstalling the posts.

See **Section J-3** for guardrail installation adjacent to curb.

GR-8 WEAK POST W-BEAM GUARDRAIL

The current Standard GR-8 meets **NCHRP 350** requirements. It is not to be used for new installations. It is to be maintained/replaced per current policy noted in **Section J-1**.

For GR-8, the minimum height is 31 1/2" to the top of the rail with a maximum height of 33". When checking the height on a length of GR-8, measure at increments of 50' where there is a rail splice. The rail splices are located between the posts. Refer to the GR-INS Standard for measuring w-beam guardrail based on location on a slope.

MB-3 STRONG POST MEDIAN BARRIER W-BEAM GUARDRAIL

MB-3 meets **NCHRP 350** requirements. It is allowed until a MASH equivalent is developed and approved. It is to be maintained/replaced per current policy noted in **Section J-1**.

MB-3 is double sided GR-2 that consists of a line of single posts with a blockout and w-beam guardrail on each side designed for use in the median when the back side of the system is within the clear zone of the opposing traffic. The MB-3 height will remain the same. If the MB-3 splits to tie into two MGS Systems, GR-MGS4 transitions will be required.

MB-5 WEAK POST MEDIAN BARRIER W-BEAM GUARDRAIL

MB-5 meets **NCHRP 350** requirements. It is not to be used for new installations. It is to be maintained/replaced per current policy noted in **Section J-1**.

MB-5 is double sided GR-8 that consists of a line of single posts with a w-beam guardrail on each side designed for use in the median when the back side of the system is within the clear zone of the opposing traffic.

GR-3 LOW TENSION CABLE GUARDRAIL

GR-3 meets **NCHRP 350** requirements. It is not to be used for new installations. It is to be maintained/replaced per current policy noted in **Section J-1**.

For GR-3, the minimum height is 27" to the top cable with a maximum height of 28". Measure the height at the posts in increments of 48 feet. GR-3 is terminated on both the run-on and run-off ends with an NCHRP 350 concrete anchor assembly as detailed in Standard GR-3.

When GR-3 is hit, the cable will typically drop rendering the entire run nonfunctioning until it is repaired.

GR-MGS4 STRONG POST TRANSITION FROM MGS1 TO GR-2 W-BEAM GUARDRAIL

GR-MGS4 is the transition used where existing GR-2 will remain in place and a new installation of a GR-MGS system will tie into the existing rail. GR-MGS4 will account for the difference in guardrail height and splice location.

GR-10 GUARDRAIL OVER LOW FILL CULVERTS

GR-10 Types I, II, and III meet **NCHRP 350** requirements and are allowed until a MASH equivalent is developed and approved.

Standard GR-10, Type I, II, or III is the preferred method of installing guardrail over low fill culverts or other obstructions with the following guidance for placement within MGS guardrail.

Type III installations will remain the same with rail nesting, post spacing, rail splice location, and GR-2 27 ¾" rail height per the Standard. On each end of a GR-10 Type III, GR-MGS4 transitions will be required to transition to the MGS system.

When Types I and II are used within GR-MGS1 guardrail, the rail height will be the same as the MGS System. It is not necessary to adjust the GR-MGS1 post spacing and rail splice locations for Types I & II. The nested rail sections will be splice to splice instead of post to post.

See the below detail for GR-10 Types I and II within a run of GR-MGS1 guardrail. Contact the Standards and Special Design Section for assistance.

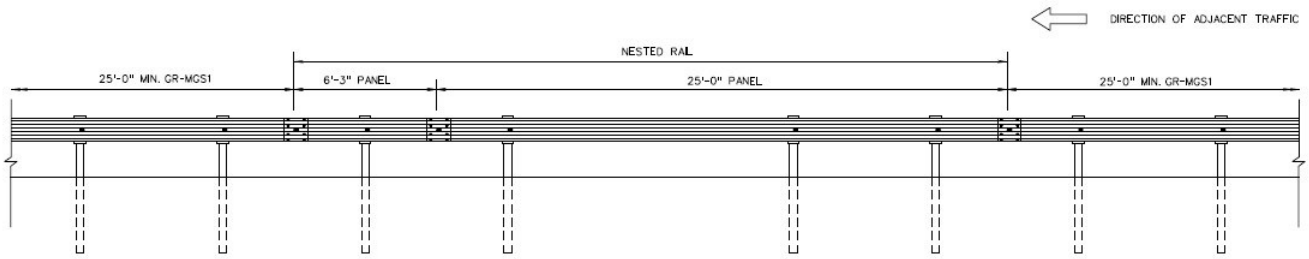

GR-10 TYPE I (ONE POST OMITTED)

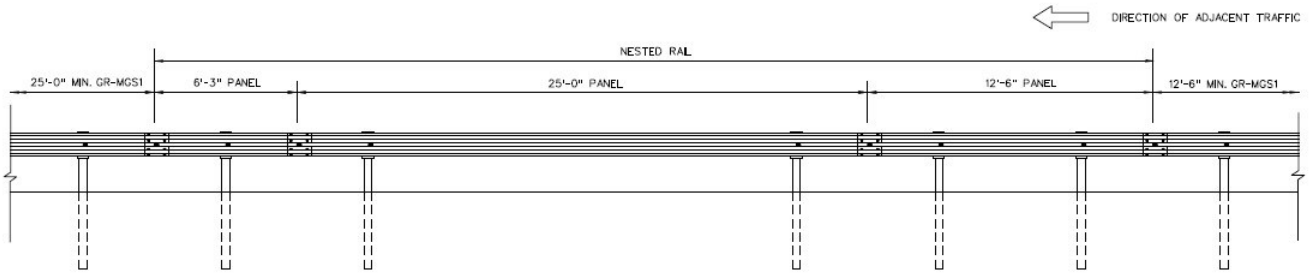

GR-10 TYPE II (TWO POSTS OMITTED)

THRIE-BEAM BULL NOSE BARRIER

The Thrie-Beam Bull Nose Barrier meets **NCHRP 350** requirements.

This NCHRP 350 system is allowed until a **MASH** equivalent is developed and approved. When the use of guardrail on depressed medians is being planned to shield bridge piers or other hazards, the designer should also consider the use of an **NCHRP 350** Thrie-beam Special Design Bull Nose Barrier. (Pay Item - Bull Nose Barrier-Each - Computer Est. No. 13601.) Installation layout details will be furnished by the Standards and Special Design Section for each Bull Nose Barrier location for inclusion in the plans. Bull nose barriers must not be used behind or on top of curbs or raised medians. A 10:1 or flatter cross slope is required at least 60 feet before the installation and is carried through to the GR-2. If attaching to a GR-MGS system, contact the Standards and Special Design Section for guardrail transition guidance. See the below detail for median and gore area layouts.

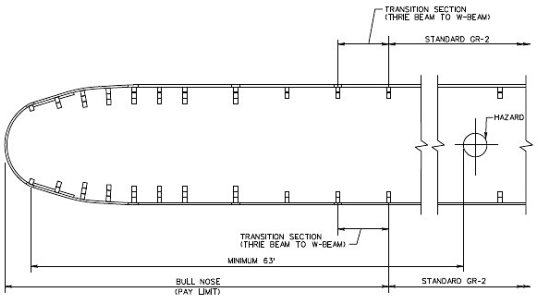

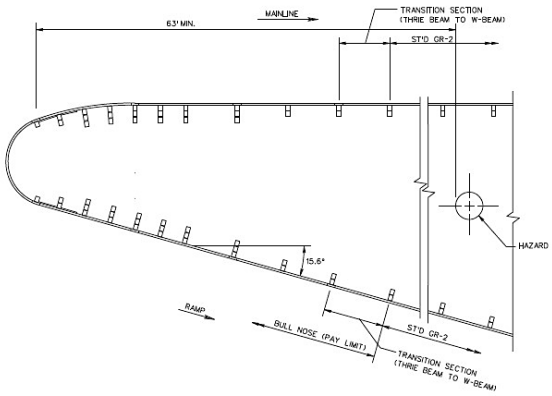

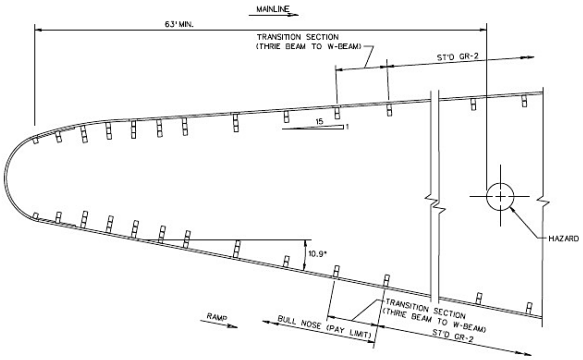

HIGH TENSION CABLE

High Tension Cable (HTC) is a multi-strand steel cable system mounted on steel posts with concrete anchors at each end. Unlike the low tension GR-3 cable, HTC is placed under a tension load once installed which provides a much greater level of performance and can still remain effective even with several posts knocked down.

There is no standard for high tension cable since each available proprietary system is unique. Therefore, a Special Provision is needed when used on a project. Drawings of the proposed system must be submitted for approval prior to installation. Contact the Standards and Special Design Section for assistance.

GUARDRAIL TERMINALS

GR-MGS2 W-BEAM TANGENT TERMINAL

The GR-MGS2 terminal meets **MASH** requirements.

Use of a GR-MGS2 is intended solely for the use on the end of a tangent strong post GR-MGS,1A w-beam installation. There is no offset from tangent at the impact head.

The total length of the system is typically 50’ with the LON (Length of Need) beginning at the 3rd post from the impact head.

Use the appropriate transition when attaching to an existing **NCHRP 350** system that is not being replaced.

GR-MGS3 W-BEAM RUN OFF ONLY TERMINAL

The GR-MGS3 is the **MASH** trailing end terminal anchorage of GR-MGS1 to be used on divided or one-way roadways for run-off conditions only. When used in a median on divided roadways, it must be beyond the clear zone of the opposing traffic.

GR-6 W-BEAM BURIED IN THE CUT, OR BACK, SLOPE TERMINAL

The GR-6 terminal meets **NCHRP 350** requirements and is allowed until a **MASH** equivalent is developed and approved. A GR-MGS4 transition will be required once the guardrail becomes tangent with the roadway to connect the GR-6 and
GR-MGS1.

The Standard GR-6 terminal is used as a means of terminating run-on or run-off ends of GR-2 or GR-MGS1 guardrail on divided or undivided roadways by burying the end of the guardrail into the cut slope. This terminal treatment requires enough right of way to extend the guardrail beyond the ditch line per the Standards. The guardrail should terminate a minimum of 1' below the ground elevation of the cut slope. The rail preceding the GR-6 terminal is to maintain a consistent height relative to roadway profile grade to prevent errant vehicles from impacting at an improper height. If more than a 200 foot extension of guardrail is necessary to tie a GR-6 terminal into the cut slope, cost-effectiveness would justify use of a tangent GR-MGS2 terminal.

Existing GR-6 installations that are not **NCHRP 350** compliant shall be upgraded to the current Standard per policy to ensure the following:

1. Proper Height per current Standards. Where existing GR-6 terminals were installed with the height of rail following the ground line at a height of 27" to 28", this installation method caused the terminals to be low, both in front of and behind the ditch line. These low installations may allow an errant vehicle to vault over the top rail and go behind the guardrail, failing its intended protection from hazards.
2. The end anchorage is sufficiently buried in the slope with 1' min. cover.
3. The installation of a bottom rail as required per the Standard.

GR-7 W-BEAM FLARED TERMINAL

The GR-7 terminal meets **NCHRP 350** requirements. A design waiver is required for any new installations. It is to be maintained/replaced per current policy noted in **Section J-1**.

Use the GR-MGS2 tangent terminal whenever possible since it meets MASH requirements.

When using the Standard GR-7 terminals on standard shoulders, the 4 foot flare as specified in the standard drawing or manufacturer's specifications must be provided for the installation to function as tested. This is considered essential to proper performance for end-on impacts to eliminate the potential of spearing.

In consideration of the 4 foot flare requirement to construct the terminal treatment for GR-7, the shoulder in the terminal area must be widened sufficiently to accommodate site preparation for the terminal. The terminal must be located to provide a clear run-out path behind the terminal or the guardrail may need to be extended as needed. The total length of the terminal is typically 37.5 feet. The length of need (LON) typically begins at the 3rd post.

On bridge replacement projects and other projects (involving guardrail upgrades) on which existing shoulders are of insufficient width and for which there are no provisions for widening such shoulders, additional fill material is required to be placed to ensure that the flare can be correctly installed. (Typical installation details are shown in the Standard GR-7. Projects with paved shoulders - Details are shown on Standard MC-4).

When this situation occurs for the GR-7 terminals on projects without normal grading operations, a pay item [Guardrail Terminal site preparation (GR-SP) - Item Code 13349 with pay unit of Each] is to be used to cover the required embankment, benching and reseeding. (A Special Provision Copied Note is available for use in contracts involving this pay item.)

GR-8 WEAK POST W-BEAM GUARDRAIL RUN-OFF ONLY TERMINAL

As with the GR-8 guardrail, this terminal is to be maintained/replaced per current policy noted in **Section J-1.**

For run-off terminal treatment with Standard GR-8 (weak post guardrail), the GR-8, Type II terminal is acceptable only for divided roadways outside of the opposing traffic clear zone or one-way traffic situations. The guardrail is to be flush with the concrete anchor throughout the length of the anchor assembly in order for the installation to function properly without shearing the bolts.

Two-way traffic on an undivided facility would introduce the possibility of opposing traffic impacting an intended run-off terminal for another lane. Therefore, an appropriate terminal must be used with the proper transition.

GR-9 W-BEAM TANGENT TERMINAL

The GR-9 terminal meets **NCHRP 350** requirements. A design waiver is required for any new installations. It is to be maintained/replaced per current policy noted in **Section J-1**. Only the GR-9 to terminate MB-3, such as a CAT-350, is allowed without a waiver until a **MASH** equivalent is developed and approved.

The GR-9 terminal used on the end of a tangent GR-2 w-beam installation typically has a 1 foot offset (50:1 over the 50 foot terminal length) provided at the impact head to reduce nuisance hits.

The total length of the terminal is typically 50 feet. The length of need (LON) typically begins at the 3rd post from the end. For GR-9 installations used to terminate GR-8 (weak post guardrail), an additional transition of GR-2 is required.

Guardrail terminals for use with median guardrail (MB-3) are designed to be hit from either side.

GR-11 W-BEAM RUN-OFF ONLY TERMINAL

The GR-11 is the **NCHRP 350** trailing end terminal anchorage on divided or one-way roadways for run-off conditions only. When used in a median on divided roadways, it must be beyond the clear zone of the opposing traffic.

A design waiver is required for any new installations. It is to be maintained/replaced per current policy noted in **Section J-1**. It is only applicable for use with **NCHRP 350** GR-2.

CONCRETE BARRIER GENERAL GUIDANCE

The “F” shape is the current standard barrier face for permanent and temporary barrier service.

Traffic Barrier Service must have an approved positive connection. See Standard MB-INS for positive connection details. **MASH** and **NCHRP 350** barrier cannot be used together within the same run.

Temporary Concrete Barriers are referred to as Traffic Barrier Service Concrete (TBSC) and are used to prevent errant vehicles from entering a work zone when site conditions warrant their use. Requirements for anchoring TBSC are described in Appendix A of the Virginia Work Area Protection Manual. When a project requires the use of an anchored barrier the designer shall label and quantify the barrier as Standard MB-10A or MB-11A depending on location and use.

For layout of temporary concrete barrier (traffic barrier service) refer to the Virginia Work Area Protection Manual.

Proprietary barriers must be on the VDOT approved list.

Water filled plastic barrier is not allowed to be used in place of concrete barrier.

The termini of concrete barrier must be designed and located so there are no exposed blunt ends that a vehicle could impact. Site prep for impact attenuators shall be per the Standards and manufacturer’s instructions. Impact attenuators must be on the provisionally approved **MASH** products list.

CONCRETE BARRIER (PERMANENT)

MB-7D, E, F 32" Tall Permanent Concrete Barrier

The "F" shape of Standard 32" tall MB-7D, E, F Concrete Median Barrier meets **NCHRP 350** and is allowed until a **MASH** equivalent is developed and approved. Testing conducted using small cars proved that reducing the height of the break between the upper and lower slopes from 10" (old Standard MB-7A, B, C Jersey shape) to 7" decreases the probability of a vehicle overturning. There is a 3" vertical reveal on the barrier face that allows for future overlays up to 3".

MB-12A, B, C 50" (TALL WALL) PERMANENT CONCRETE BARRIER

MB-12A, B, C is the 50" tall wall version of the **NCHRP 350** MB-7D, E, F and is allowed until a **MASH** equivalent is developed and approved. It is for glare control where there is a high volume (10% or greater) of truck traffic or other warrants as noted below. This barrier is designed with the same shape as MB-7D, E, F, but is extended to a 50" height.

Conditions to keep in mind when considering concrete median barrier for glare control are median width, vertical grades and horizontal curvature (especially to the left). Since warrants are not available for determining the need for glare screens, a recommendation from the District Traffic Engineer based on existing accident data would be the typical factor for determining a need.

MB-8A Type I, II, III GRADE DIFFERENTIAL PERMANENT CONCRETE BARRIER

MB-8A is the grade differential version of MB-7D, E, F and is allowed until a **MASH** equivalent is developed and approved. When a double-faced median barrier is used to separate roadways with minimal width medians and the barrier faces are at different elevations due to the roadway elevations, superelevation, etc., the designer can specify Concrete Median Barrier MB-8A, Type I, II, or III for grade differentials varying from zero to 3'0" maximum. Grade differences exceeding the 3'0" maximum will be submitted to the Standards and Special Design Section for design.

MB-13 Type I, II, III (TALL WALL) GRADE DIFF. PERMANENT CONCRETE BARRIER

MB-13 is the tall wall version of MB-8A and is allowed until a **MASH** equivalent is developed and approved. Concrete Median barrier (Tall Wall), MB-13 (TYPE. I, II, or III) is for use with the same conditions that govern the use of 50" tall MB-12A, B, C. MB-13 is designed with the same shape as MB-8A and extended to the 50" height on the roadway with the highest elevation.

CONCRETE BARRIER (TEMPORARY – NOT FOR PERMANENT INSTALLATION)

TCB-1

TCB-1 is a **MASH** nonproprietary "F" shape temporary concrete barrier with a pin and loop positive connection.

MB-7D PC

MB-7D PC is a **NCHRP 350** nonproprietary temporary concrete barrier with a pin and loop positive connection. MB-7D PC is not **MASH** compliant and installation is governed by IIM-LD-259 which defines the useful life. Only MB-7D PC fabricated prior to the year 2020 will be allowed.

MB-10A SINGLE FACE BOLT DOWN BARRIER

MB-10A is not **MASH** compliant and installation is governed by IIM-LD-259 which defines the useful life. Only MB-10A fabricated prior to the year 2020 will be allowed. It is for use only on bridge decks as a temporary parapet and must be bolted down. See the current Road & Bridge Standard MB-10A for installation details.

MB-11A DOUBLE FACE BOLT DOWN OR STAKED BARRIER

MB-11A is not **MASH** compliant and the installation is governed by IIM-LD-259 which defines the useful life. Only MB-11A fabricated prior to the year 2020 will be allowed. It is for use on bridge decks when bolted down and on pavement when staked in place. It can be used as MB-7D PC on pavement when not staked in place. See the current Road & Bridge Standard MB-11A for installation details.

CONCRETE BARRIER TERMINALS

MB-9A TURNED DOWN CONCRETE MEDIAN BARRIER TERMINAL

A concrete turned down MB-9A terminal is for use in permanent installations with the **NCHRP 350** “F” shape Standard 32” tall MB-7D Concrete Median Barrier.

MB-9A can be used to terminate concrete barrier for run-on treatments outside the clear zone with operating speeds of 40 mph or less and for all run-off treatments.

MB-9A PC TURNED DOWN CONCRETE MEDIAN BARRIER TERMINAL

A precast concrete turned down MB-9A PC terminal is for use in temporary work zone installations with the **NCHRP 350** “F” shape Standard 32” tall MB-7D PC temporary concrete barrier.

MB-9A PC can be used to terminate temporary concrete barrier for run-on treatments outside the clear zone with operating speeds of 40 mph or less and for all run-off treatments.

IMPACT ATTENUATORS – GENERAL GUIDANCE

During the preliminary design stages for new construction and for rehabilitation or reconstruction of existing highways, the need for and space requirements of impact attenuators to shield non removable fixed objects should be considered. This will ensure compatibility with the final design and the impact attenuator that is to be installed. Since these devices are expensive to install and maintain, the hazard must be studied to determine if elimination is possible or its inherent hazard potential can be economically reduced to tolerable limits by less

drastic safety treatments, such as guardrail, breakaway supports, set-back, etc. Refer to the Standards for permanent impact attenuator installations. For nonstandard locations, contact the Standards and Special Design Section. For temporary impact attenuators, the designer selects the site and requests a review by the Standards and Special Design Section for the type of impact attenuator to be used.

When requesting the review and installation details from the Standards and Special Design Section, provide the applicable plan sheets, project number, UPC numbers, activity number, roadway design speed, and advertisement date. In no case will attenuation devices be designed for placement behind curbed locations. For additional data, refer to the **AASHTO *Roadside Design Guide***.

Impact attenuators subjected to traffic speeds greater than 45 mph must meet Test Level 3 requirements per **MASH** as appropriate.

Impact attenuators subjected to traffic speeds of 45 mph and less must meet Test Level 2 requirements per **MASH** as appropriate.

Impact attenuators will be installed in areas that have a design speed (for permanent installations) or a posted speed (for temporary installations) of ≥ 50 mph and have an ADT more than 25,000 VPD. These devices must come from the "Type 1 (Re-Directive Low-Maintenance)" category of the VDOT's Provisionally Approved MASH Product List.

For a list of approved devices see VDOT's Provisionally Approved MASH Products List at: http://www.virginiadot.org/business/resources/LocDes/VDOT_Provisionally_Approved_MASH_Products.pdf

Fixed roadside hazards vary in size and shape, and in the degree of danger they present. The traffic passing by varies as well in volume, speed and density. For these reasons a selection from various types of crash cushions can be designed to meet the special requirements of a particular hazard site.

Figure J-2-1 recommends the area that should be made available for impact attenuator installation. Although it depicts a gore location, the same recommendations will generally apply to other types of fixed object hazards that require shielding. The unrestricted conditions represent the minimum dimensions for all locations except for those sites where it can be demonstrated that the increased costs for obtaining these dimensions (as opposed to those for restricted conditions) will be unreasonable. The preferred condition dimensions should be considered optimum. The space provided by these dimensions will seldom be fully used by an impact attenuator.

These dimensions are recommended so there will be additional space available should experience dictate the need for a device capable of slowing larger vehicles than originally considered or for producing lower deceleration forces. In the meantime, the unoccupied space provides valuable motorist recovery area. Site conditions may dictate the type of attenuator needed. For example, fixed objects such as barrier ends which are no more than 2 feet wide should be shielded by a narrow impact attenuator. Similarly, wide hazards, e.g., those greater than 2 feet wide, can be effectively shielded best by a wide impact attenuator or approved sand barrier arrays. Contact the Standards and Special Design Section for assistance with wide impact attenuators.

Design Speed on Main line [mph]	Dimensions for Crash Cushion, Reserve Area [feet]								
	Minimum						Preferred		
	Restricted Conditions			Unrestricted Conditions					
	N	L	F	N	L	F	N	L	F
30	6	8	2	8	11	3	12	17	4
50	6	17	2	8	25	3	12	33	4
70	6	28	2	8	45	3	12	55	4
80	6	35	2	8	55	3	12	70	4

Source: The 2011 AASHTO Roadside Design Guide.

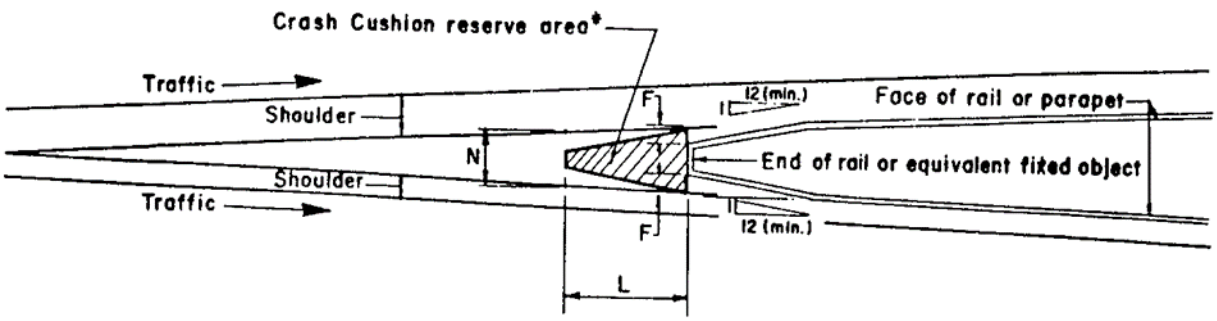

FIGURE J-2-1 GENERAL IMPACT ATTENUATOR AREA

Source: The 2011 AASHTO Roadside Design Guide.

SECTION J-3 BARRIER INSTALLATION CRITERIA

BARRIER WARRANTS

The determining warrants for Traffic Barriers on VDOT projects are (1) Embankment Heights (see below) and (2) Fixed and Hazardous Objects within the Clear Zone (see **TABLE J-3-2**).

SYSTEM CLASSIFICATION		TRAFFIC VOLUMES	FILLS OVER 7.5'	FILLS OVER 15'	AT OBVIOUS NEEDS SUCH AS BRIDGES, LARGE END WALLS, PARALLEL WATER HAZARDS, ETC., AND FILLS WHERE RECOMMENDED DURING FIELD INSPECTION
INTERSTATE - PRIMARY AND ARTERIAL	FILLS WITHOUT RECOVERABLE SLOPES	ALL	√		√
	FILLS WITH RECOVERABLE SLOPES				√
SECONDARY AND FRONTAGE ROADS		ADT OVER 1000	√		√
		ADT 1000 - 250		*√	√
		ADT LESS THAN 250			√
URBAN		ALL			√

TABLE J-3-1 EMBANKMENT HEIGHTS

* Exception - Bristol, Salem, and Staunton Districts. Traffic barriers are to be provided only at obvious needs such as bridges, large endwalls, parallel water hazards, etc., and fills where recommended at field inspection.

When fill slopes are 3:1 or flatter, a barrier is not required unless there are hazardous obstacles within the clear zone limits. This may include the clear runout area if the fill slope is between 3:1 and 4:1 (see **Appendix A2, Figure A2-7**).

In some limited situations in which the embankment slopes significantly downward, a vehicle could encroach farther from the through traveled way and the clear zone might not be adequate. In these cases, guardrail should be considered.

	Barrier Required	
	YES	NO
1. Sign Support (ground mounted): (A) Post of breakaway design (a)		X
(B) Post not meeting breakaway criteria (b)(c)(d)	X	
2. Lighting/Signal Poles and Towers (A) Breakaway design		X
(B) Not meeting breakaway design (b)(c)(g)(h)	X	
3. Bridge parapet ends, piers and abutments at underpasses	X	
4. Retaining walls (Including MSE walls) (j)	X	
5. Trees with a diameter of 4 inches or greater (e)	X	
6. Utility Poles (f)		X
7. Above ground utilities (telephone pedestals, etc.) (i)	X	
8. Rough rock cuts and large boulders	X	
9. Streams or permanent bodies of water more than 2 feet deep (h)	X	
10. Sound Walls (k)	X	
11. Culvert Headwalls (l)	X	

NOTES

(a) Multiple post installations where the spacing between posts is less than the minimum spacing required for breakaway shall be replaced or shielded by barrier.

(b) Every effort should be made to convert non-breakaway to breakaway.

(c) Where these devices exist and cannot be converted to breakaway, relocated or removed, the choice of barrier should be in accordance with the deflection shown in **Table J-3-3**.

(d) Wood posts larger than 6" x 8" nominal size do not meet the breakaway requirements even if drilled.

(e) Every effort should be made to remove the tree rather than shield it with barrier.

(f) Barrier will not normally be used to shield a line of utility poles. However, where barriers are used in front of utility poles for other reasons, the choice of barrier should be in accordance with the deflection shown in **Table J-3-3**.

(g) Pedestal poles, except for those used for power supply should be converted to breakaway standards where possible.

(h) A field review and evaluation should be made to determine if barrier is suitable for protecting motorists from these roadside hazards.

(i) Consideration should be given to placing utilities underground.

(j) When a barrier is required on the top of a retaining wall, a cast-in-place concrete parapet is to be used on top of the wall. Depending on the wall design, the parapet can be integrated into the wall or cast with a moment slab to resist overturning. Do not use guardrail in conjunction with a retaining wall.

(k) A cast-in-place concrete barrier is required in front of a sound wall. Refer to SOUND BARRIER WALLS in this section for barrier placement.

(l) Consider extending new or existing culvert to move the headwall out of the Clear Zone or designing the headwall as a parapet for a new culvert installation. If guardrail cannot be installed due to the culvert width and shallow fill over the culvert, then cast-in-place concrete barrier must be used over the culvert. If the concrete barrier is being used as a parapet then it must be integral to the culvert or cast with a moment slab.

TABLE J-3-2 TYPICAL FIXED AND HAZARDOUS OBJECTS WITHIN THE CLEAR ZONE

FIXED OBJECTS WITHIN DEFLECTION AREA

No fixed objects, regardless of their distances from the edge-of-pavement, will be allowed within the deflection zone of the guardrail system to assure that the guardrail system will perform as designed. This will include overhead sign supports, luminaire supports, walls, drainage structures, bridge piers, signal supports, utility poles, trees, etc. *

When it is impractical to locate hazards outside of the deflection zone of standard guardrail, it may be necessary to use concrete barrier.

Table J-3-3 (Typical Barrier/Guardrail Selection and Placement) specifies the minimum offset distance required from "hazardous objects" to meet deflection requirements of the different types of barrier systems.

PONDS OR OTHER BODIES OF WATER

Barrier is to be constructed on all functional classifications at ponds or other bodies of water over 2 feet in depth when it is within the design clear zone.

* Deleted 7/21

SOUND BARRIER WALLS

Sound barrier walls adjacent to a curb/curb and gutter sections on **Urban Low Speed Roadways** (design speed equal to or less than 45 mph) shall be shielded (protected) with cast-in-place concrete MB-7F or with guardrail as shown in the below details. This detail is not for use on Interstate Freeways, Interchanges, or Ramps.

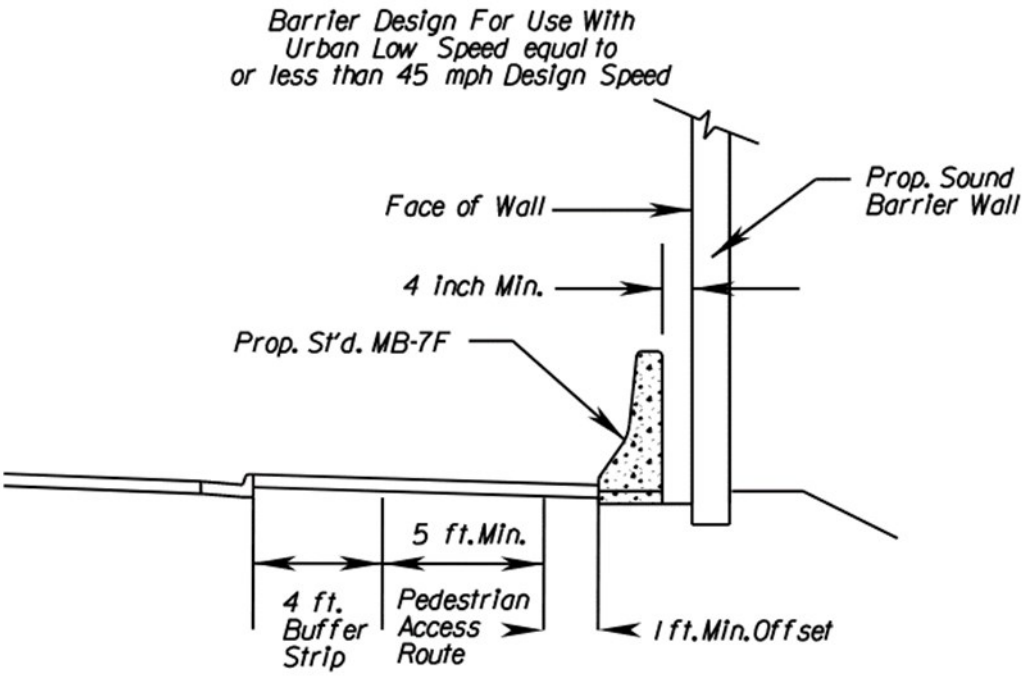

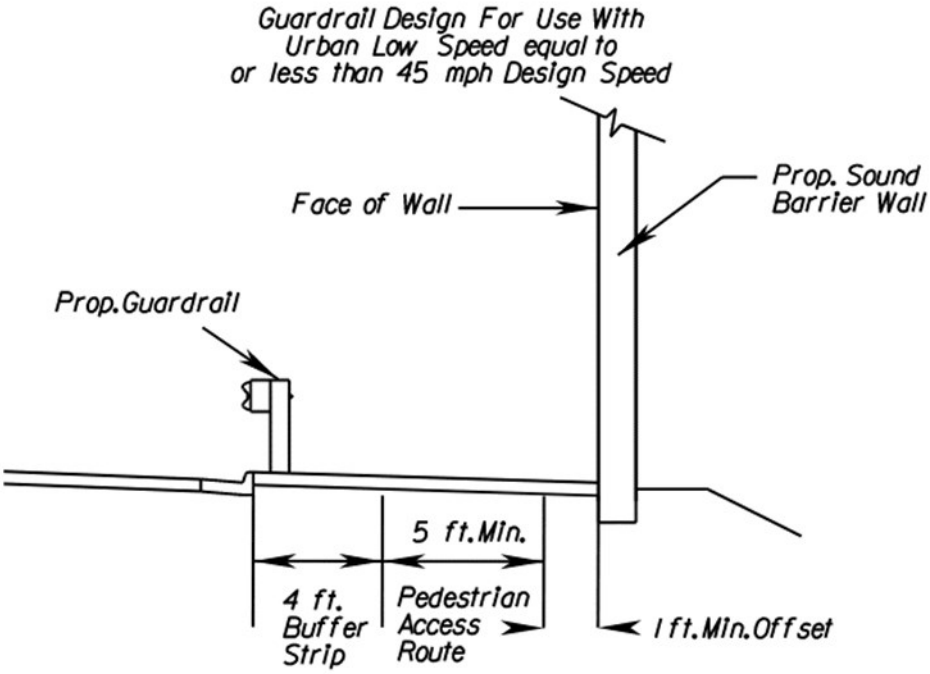

URBAN LOW SPEED (≤45 MPH) CURB / CURB AND GUTTER SECTION DETAILS

High Speed Roadways (design speed 50 mph or greater) with curb/curb and gutter shall have the sound barrier wall offset with a shoulder and shielded by cast-in-place concrete MB-7D as shown in the below Shoulder Section Details. Guardrail shall not be used on high speed roadways to shield sound barrier walls.

All **Roadways with a Shoulder Section** regardless of design speed shall use MB-7D to shield the sound barrier wall as shown in the below detail.

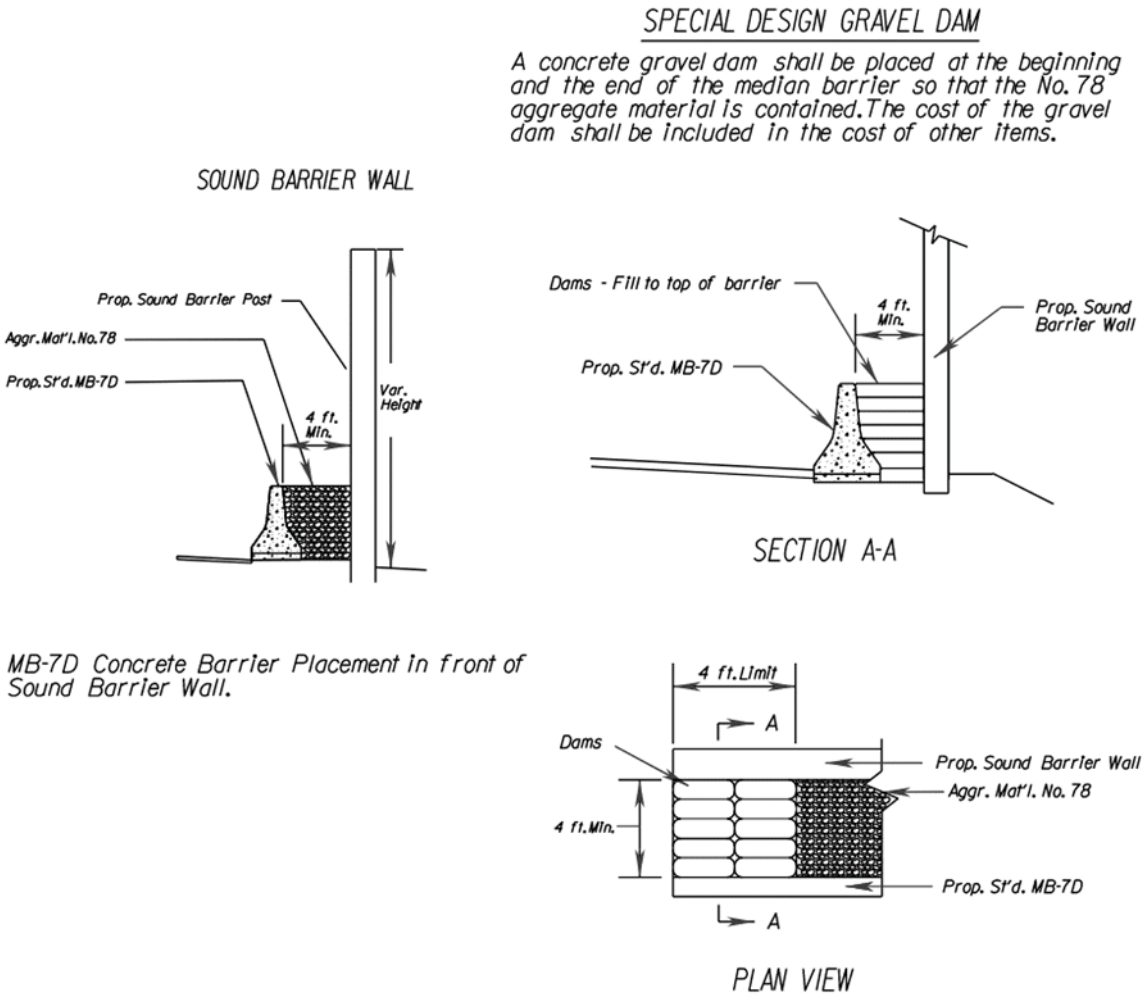

SHOULDER SECTION DETAILS

BARRIER TYPE SELECTION

When it has been determined that a barrier is required, a determination must be made as to the type of barrier that is to be used. System and terminal specific guidelines are provided later in this appendix that can be used in making a barrier system selection. The most desirable system is one that offers the lowest accident severity at the least cost within the given constraints.

The **AASHTO *Roadside Design Guide*** presents eight items which must be considered before a system selection is made.

1. Performance capability
2. Deflection
3. Site conditions
4. Compatibility
5. Cost
6. Maintenance
7. Field Experience
8. Aesthetics (occasionally)

In taking all eight items into account, the deflection, strength, and safety requirements must never be compromised. **Table J-3-3** shows the Standard types of MASH barrier currently available.

The table includes barrier height, maximum dynamic deflection, minimum offset from hazardous object, post spacing, and typical terminal treatment for each Standard. The Road and Bridge Standards provide transition designs for use in various situations.

Weathering steel (COR-TEN) w-beam guardrail is no longer acceptable for use in new construction or maintenance replacement due to the potential for premature material failure from excessive rust. Guardrail terminals are no longer available with weathering steel. An acceptable “aesthetic” guardrail is powder coated galvanized rail with Standard posts conforming to applicable VDOT Standards and MASH requirements. However, it should be avoided since it can create a maintenance problem. There is difficulty in sourcing powder coated materials and it will add a significant cost increase to install and maintain. Powder coating will require a separate pay item. Contact the Materials Division for approved treatment methods.

BARRIER SYSTEM	VDOT STD	MASH OR NCHRP 350	BARRIER HEIGHT	MINIMUM OFFSET FROM HAZARD (MAXIMUM DYNAMIC DEFLECT.) (A)(B)(C)	POST SPACE	**DIVIDED ROADWAY OR ONE-WAY TRAFFIC**		**UNDIVIDED ROADWAY** OR TWO-WAY TRAFFIC	
						RUN-ON TERMINAL END TREATMENT	RUN-OFF TERMINAL END TREATMENT	RUN-ON TERMINAL END TREATMENT	RUN-OFF TERMINAL END TREATMENT (E)
FLEXIBLE (WEAK POST OR LOW TENSION CABLE)	GR-3 (L)	NCHRP 350	27" to 28"	11'	16'-0"	GR-3	GR-3	GR-3	GR-3
	GR-8 (L)	NCHRP 350	31 ½" to 33"	7'	12'-6"	GR-MGS2 GR-6 (H) GR-7 (M) GR-9 (M)	GR-8, TY. II (D)(L)	GR-MGS2 GR-6 (H)(E) GR-7 (M)(E) GR-9 (M)(E)	GR-MGS2 GR-6 (H)(E) GR-7 (M)(E) GR-9 (M)(E)
	GR-8A (L)	NCHRP 350	31 ½" to 33"	5'	6'-3"	GR-MGS2 GR-6 (H) GR-7 (M) GR-9 (M)	GR-8, TY. II (D)(L)	GR-MGS2 GR-6 (H)(E) GR-7 (M)(E) GR-9 (M)(E)	GR-MGS2 GR-6 (H)(E) GR-7 (M)(E) GR-9 (M)(E)
	GR-8B (L)	NCHRP 350	31 ½" to 33"	4'	3'-1½"	GR-MGS2 GR-6 (H) GR-7 (M) GR-9 (M)	GR-8, TY. II (D)(L)	GR-MGS2 GR-6 (H)(E) GR-7 (M)(E) GR-9 (M)(E)	GR-MGS2 GR-6 (H)(E) GR-7 (M)(E) GR-9 (M)(E)
	MB-5 (F)(L)	NCHRP 350	31 ½" to 33"	7'	12'-6"	GR-9 (K)	GR-9 (K)	N/A	N/A
	MB-5A (F)(L)	NCHRP 350	31 ½" to 33"	5'	6'-3"	GR-9 (K)	GR-9 (K)	N/A	N/A
	MB-5B (F)(L)	NCHRP 350	31 ½" to 33"	4'	3'-1½"	GR-9 (K)	GR-9 (K)	N/A	N/A
HIGH TENSION CABLE	Proprietary Special Provision Required	Refer to Specific System	Varies	Varies	Varies	Site Specific Concrete Cable Anchor	Site Specific Concrete Cable Anchor	Site Specific Concrete Cable Anchor	Site Specific Concrete Cable Anchor
SEMI-RIGID (STRONG POST)	GR-MGS1	MASH	30' to 32"	5'-0"	6'-3"	GR-MGS2	GR-MGS3 (D)	GR-MGS2	GR-MGS2
	GR-MGS1A	MASH	30' to 32"	4'-0"	3'-1½"	GR-MGS2	GR-MGS3 (D)	GR-MGS2	GR-MGS2
	GR-2 (M)	NCHRP 350	27 ¾" to 28 ¾"	3'	6'-3"	GR-MGS2 GR-6 (H) GR-7 (M) GR-9 (M)	GR-MGS3 GR-11 (D)(L)	GR-MGS2 GR-6 (H) GR-7 (M) GR-9 (M)	GR-MGS2 GR-6 (H) GR-7 (M) GR-9 (M)
	GR-2A (M)	NCHRP 350	27 ¾" to 28 ¾"	2'	3'-1½"	GR-MGS2 GR-6 (H) GR-7 (M) GR-9 (M)	GR-MGS3 GR-11 (D)(L)	GR-MGS2 GR-6 (H) GR-7 (M) GR-9 (M)	GR-MGS2 GR-6 (H) GR-7 (M) GR-9 (M)
	MB-3 (G)	NCHRP 350	27 ¾" to 28 ¾"	3'	6'-3"	GR-9 (K)	GR-9 (K)	N/A	N/A
RIGID (PERM. CONCRETE BARRIER)	MB-7D, 7E 7F,12A, 12B, & 12C (H)	NCHRP 350	32"	0'	N/A	IA-1, IA-2, IA-LM MASH IMPACT ATT. (I) (I)	N/A	IA-1, IA-2, IA-LM MASH IMPACT ATT. (I)	IA-1, IA-2, IA-LM MASH IMPACT ATT. (I)

TABLE J-3-3 TYPICAL MASH BARRIER SELECTION AND PLACEMENT*

For permanent installations only; not to be used for TMP plans. Refer to **Sections J-1** **and J-2** for current policy and more detailed system information. For temporary concrete barrier (traffic barrier service) refer to the VDOT Work Area Protection Manual.

NOTES FOR TABLE J-3-3:

(A) The deflection zone of all MGS w-beam guardrail systems will be measured from the face of rail and must be totally clear of any hazards in order to assure that the system will perform as tested.

(B) The deflection zone of all GR-2, 3 & 8 systems will be measured from the back of the post and must be totally clear of any hazards in order to assure that the system will perform as tested. MB-3 & MB-5 will be measured from the face of rail closest to hazard.

(C) Deflection distances are based on crash testing in controlled conditions. Where there is a potential for high speeds with high angles of impact, the distance to fixed objects should be increased (which will allow for possible higher deflections) or use concrete barrier. Consideration should be given to using concrete barrier for locations with high percentages of trucks.

(D) The terminal must be installed outside the clear zone of opposing traffic when used in a median on a divided highway.

(E) A transition from a weak post system to a strong post system with a run-on terminal must be provided in accordance with Standard GR-INS drawings.

(F) For use in wide, flat medians (> 30’ width).

(G) For use in narrow medians (approximately 10-30 feet width).

(H) If more than a 200' of additional guardrail is necessary to bury the end of the rail in the back slope for a GR-6 terminal, use a GR-MGS2 terminal. For GR-6 installations, GR-2 must be installed from the terminal to the beginning of the flare before introducing a GR-MGS4 transition to GR-MGS1 guardrail.

(I) Concrete “turned down” terminals (Std. MB-9A) may be used for locations outside clear zone when operating speed is 40 mph or less.

(J) For use in medians 0-30 feet wide.

(K) GR-9 (i.e. CAT 350) for MB-3. MB-5, 5A and 5B must be transitioned to MB-3 prior to terminal. A design waiver is not required until a MASH equivalent is developed.

(L) It is not to be used for new installations. It is to be maintained/replaced per current policy noted in **Section J-1**.

(M) A design waiver is required for new installations. It is to be maintained/replaced per current policy noted in **Section J-1**.

DETERMINING LOCATION OF THE ENDS OF GUARDRAIL

Figure J-3-1 and **Table J-3-4** give a method to determine the location of the end of guardrail systems. Appropriate terminals shall be placed at this point.

Determining LON for adjacent traffic:

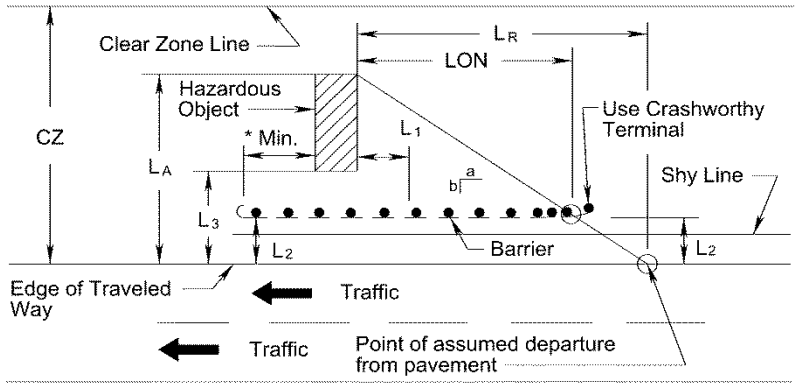

Determining LON for opposing traffic on two-way undivided roadway:

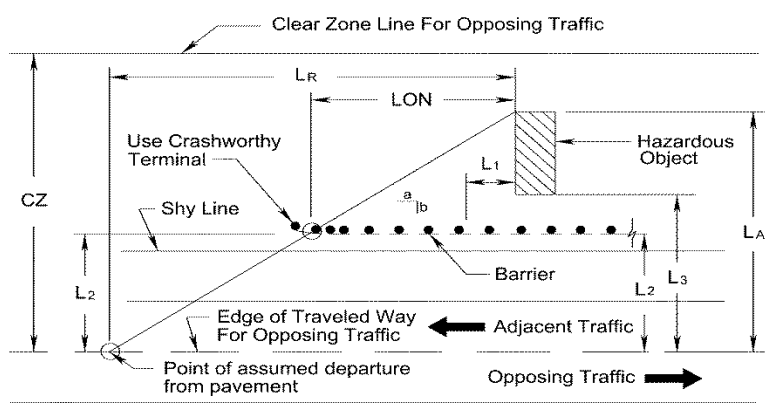

FIGURE J-3-1 BARRIER LENGTH OF NEED DETERMINATION

LON = Length of Need
Cz = Clear Zone Width
L_A = Distance to back of hazard, Max. = Cz
L_R = Runout length
L_1 = Upstream length of Guardrail prior to flare
L_2 = Distance to Face of Guardrail
L_3 = Distance to front of hazard
a:b = Flare Rate of Guardrail (if applicable)

* For one-way traffic on undivided roadway the terminal can begin after end of hazard; 12.5' for GR-MGS3 to terminate GR-MGS1.

$$LON = \frac{L_A + (b/a)(L_1) - L_2}{(b/a) + (L_A/L_R)}$$

$$LON\ (No\ Flare) = \frac{L_A - L_2}{L_A / L_R}$$

DESIGN SPEED (MPH)	DESIGN TRAFFIC VOLUME				* SHY LINE (FT)	FLARE RATE	
	RUNOUT LENGTH (OVER 10000 ADT) Lr(FT)	RUNOUT LENGTH (5000 - 10000 ADT) Lr(FT)	RUNOUT LENGTH (1000 - 5000 ADT) Lr(FT)	RUNOUT LENGTH (UNDER 1000 ADT) Lr(FT)		BEYOND SHY LINE	INSIDE SHY LINE
						GR-MGS1/1A	
80	470	430	380	330	12	NA	NA
70	360	330	290	250	9	15:1	30:1
60	300	250	210	200	8	14:1	26:1
50	230	190	160	150	6.5	11:1	21:1
40	160	130	110	100	5	8:1	16:1
30	110	90	80	70	4	7:1	13:1

TABLE J-3-4 DESIGN PARAMETERS FOR ROADSIDE BARRIER LAYOUT

*Shy line is measured from the adjacent edge of pavement and is a distance beyond which a roadside object will not be perceived as a threat by a driver. In other words, a driver will not react to an object beyond the shy line offset. If possible, the roadside barrier should be placed beyond the shy line offset.

Source: The 2011 Roadside Design Guide Tables 5.7, 5.9 & 5.10(b)

SLOPES FOR BARRIERS

As a general rule, a roadside barrier should not be placed on an embankment if the slope of the embankment is steeper than 10:1. A clear run-out path should also be provided behind the terminal.

When guardrail is required, it is to be placed using at least the minimum fill shoulder width specified in the Geometric Design Standard.

ASPHALT PAVING UNDER GUARDRAIL

Asphalt paving shall be used under guardrail to control the growth of vegetation on projects which have asphalt concrete or hydraulic cement concrete paved shoulders unless otherwise directed by the District Maintenance Engineer. Aggregate or soil stabilized shoulders do not require asphalt concrete paving under the guardrail. The additional paving is to begin and end without transition as detailed in the Road and Bridge Standards MC-3B Asphalt Curb, and Standard MC-4 Asphalt Paving under Guardrail. The station limits of each additional paving segment is to be shown on the plans.

If more than one allowable type of asphalt concrete is called for on the project, the one with the lowest estimated unit cost is to be used. If the estimated unit costs are the same, the one with the smaller aggregate gradation is to be used.

For paving under GR-MGS1 and GR-MGS2, Standard MC-4 is applicable. If pavement depth under guardrail is greater than 2", then refer to **GR-MGS-INS (LEAVE-OUT FOR STANDARD GAURDRAIL POST INSTALLATION)**. The leave-out in the pavement allows the post to rotate as intended when the guardrail is hit.

ASPHALT CURBS

Standard MC-3B Asphalt curb is to be used, where necessary, in conjunction with MC-4 paving under guardrail on high fills to provide a means of erosion control to preserve the slopes. The need for the asphalt curb should be determined during the project Field Inspection.

A minimum 5' (1.5 m) length of asphalt curb is to be constructed past the end of an inlet and transitioned to grade level.

The same detail shown in Standard MC-3B for GR-2 is applicable for GR-MGS1.

GUARDRAIL INSTALLATION IN ROCK

When rock interferes with guardrail post installation, DO NOT CUT POSTS. Refer to Standard GR-MGS-INS (LEAVE-OUT FOR STANDARD GAURDRAIL POST INSTALLATION).

GUARDRAIL INSTALLATION ADJACENT TO CURB

Guardrail is not recommended where curb, or curb and gutter is used. Whenever it is necessary to provide guardrail along a curbed section for design speeds greater than 45 mph Standard GR-MGS1/1A shall be used in conjunction with Standard CG-3 or CG-7 (4" curb) and the face of the rail shall be aligned with the face of curb. For design speeds 45 mph or less, CG-2 or CG-6 (6" curb) or CG-3 or CG-7 (4" curb) can be used with the face of rail aligned with the face of curb or with the face of rail offset a minimum of 6'-0" from the face of curb.

For new construction or upgrading, where guardrail is aligned with the face of curb, use the typical curb layout as shown in **Figure J-3-2** or as approved by the engineer at the terminal location. The designer will need to adjust the typical cross section as necessary to account for the curb layout. When existing curb cannot be removed or relocated, contact the Central Office Standards and Special Design Section.

It is usually impractical to install guardrail between the roadway and a sidewalk/sidewalk space. When necessary to provide guardrail along a sidewalk/sidewalk space due to a hazard, the guardrail shall be placed 1' behind the sidewalk (or sidewalk space) for design speeds 45 mph or less provided that the minimum 6'-0" offset noted in this section be met. For design speeds higher than 45 mph, the guardrail shall be placed at the face of curb as noted in this section.

When a sidewalk or shared-use path transitions from the roadway onto a bridge, guardrail is required if the travel way and the sidewalk or shared-use path are separated by a barrier on the bridge. See Figures J-3-3, J-3-4, J-3-5, and J-3-6.

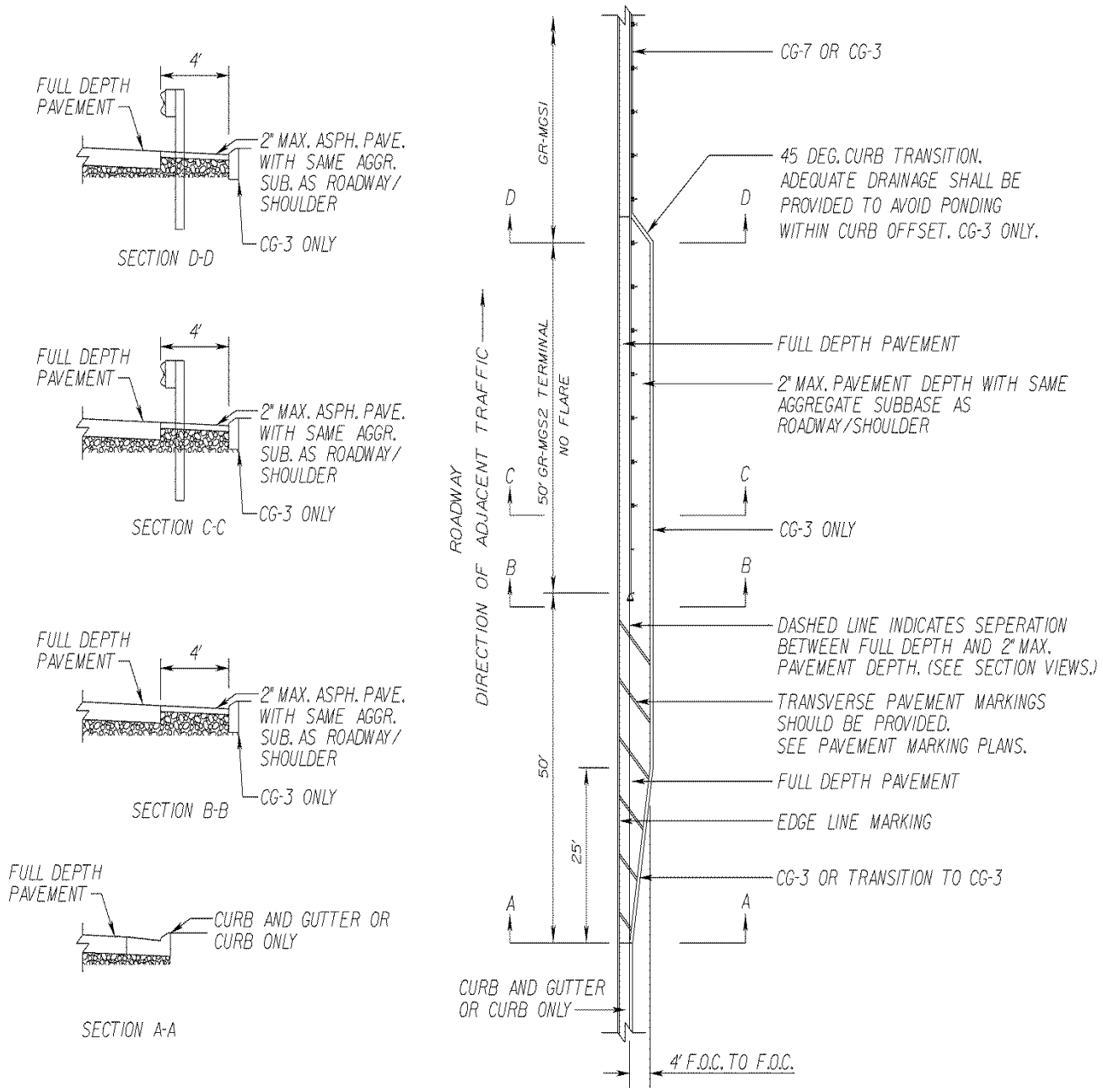

FIGURE J-3-2 TYPICAL CURB OFFSET LAYOUT FOR A TANGENT GUARDRAIL TERMINAL

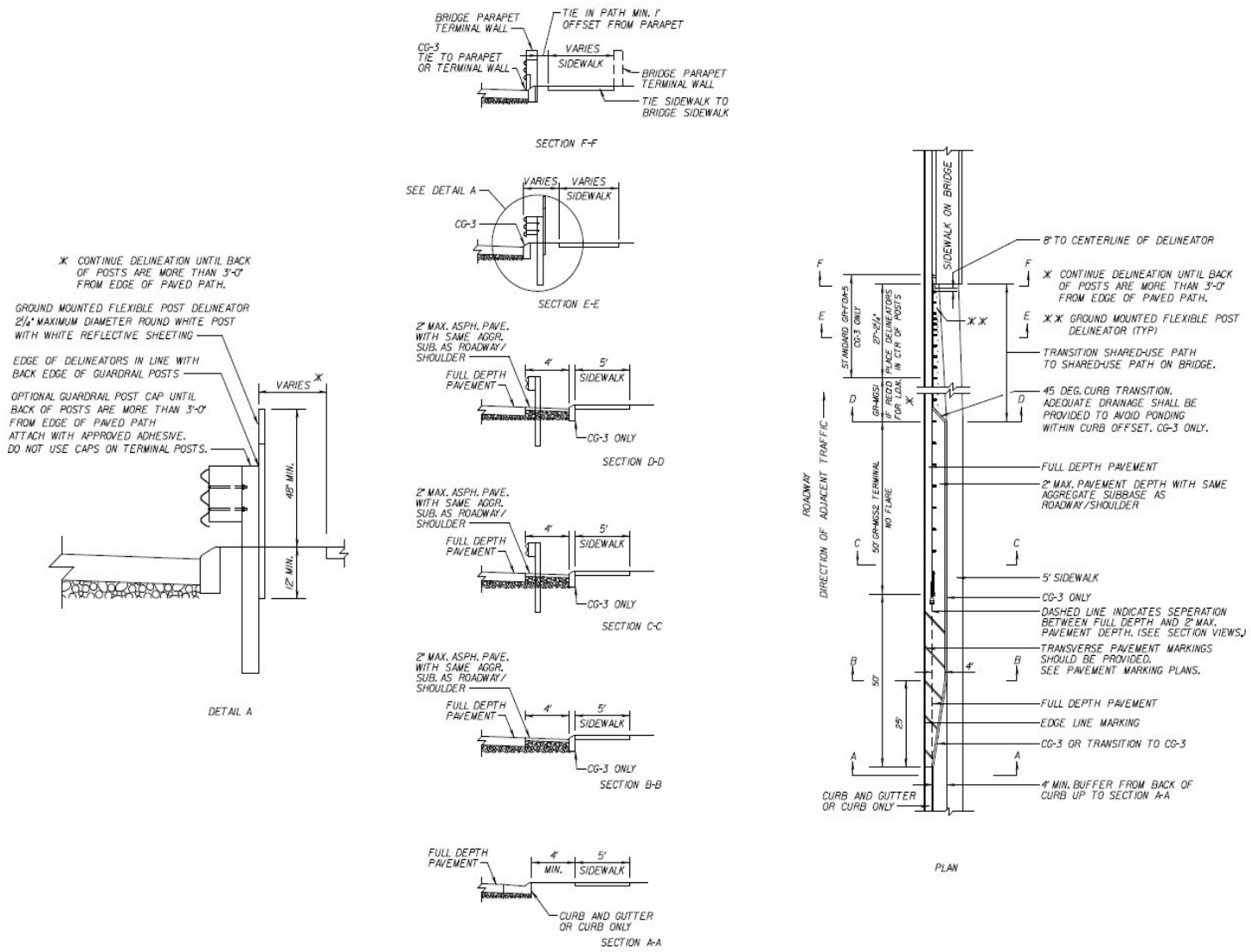

FIGURE J-3-3 GR-FOA 5 & TYPICAL CURB OFFSET LAYOUT FOR A TANGENT GUARDRAIL TERMINAL AT A BRIDGE WITH A SIDEWALK

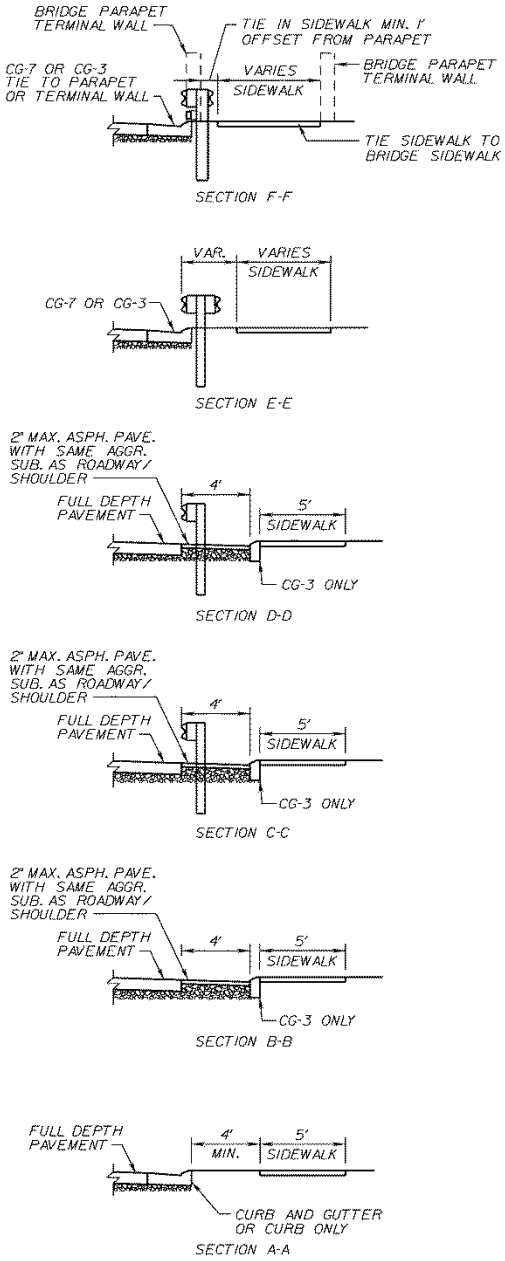

FIGURE J-3-4 SPECIAL DESIGN FOA (MODIFIED FOA-1) & TYPICAL CURB OFFSET FOR A TANGENT GUARDRAIL TERMINAL AT A BRIDGE WITH A SIDEWALK

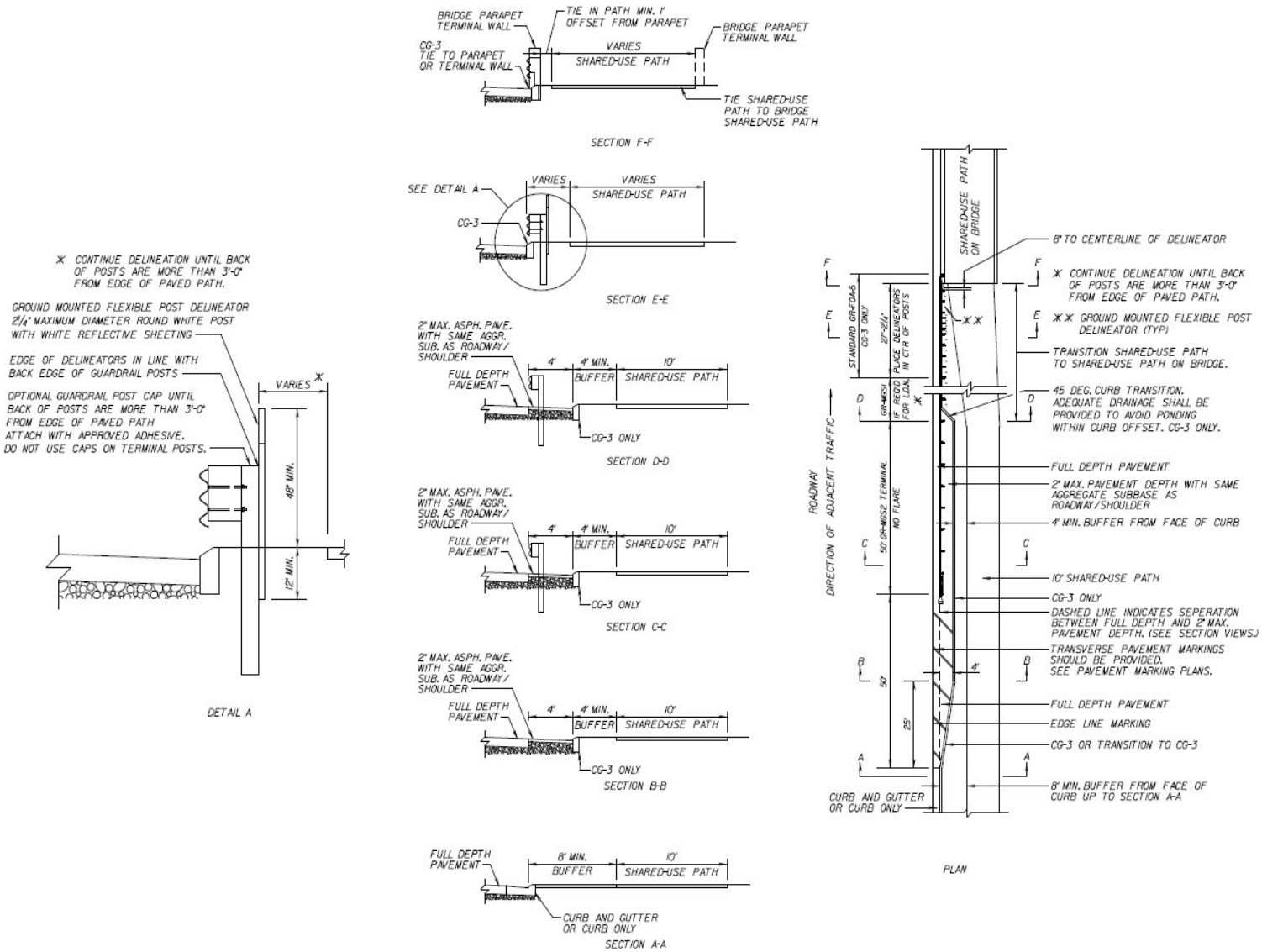

FIGURE J-3-5 GR-FOA 5 & TYPICAL CURB OFFSET LAYOUT FOR A TANGENT GUARDRAIL TERMINAL AT A BRIDGE WITH A SHARED USE PATH

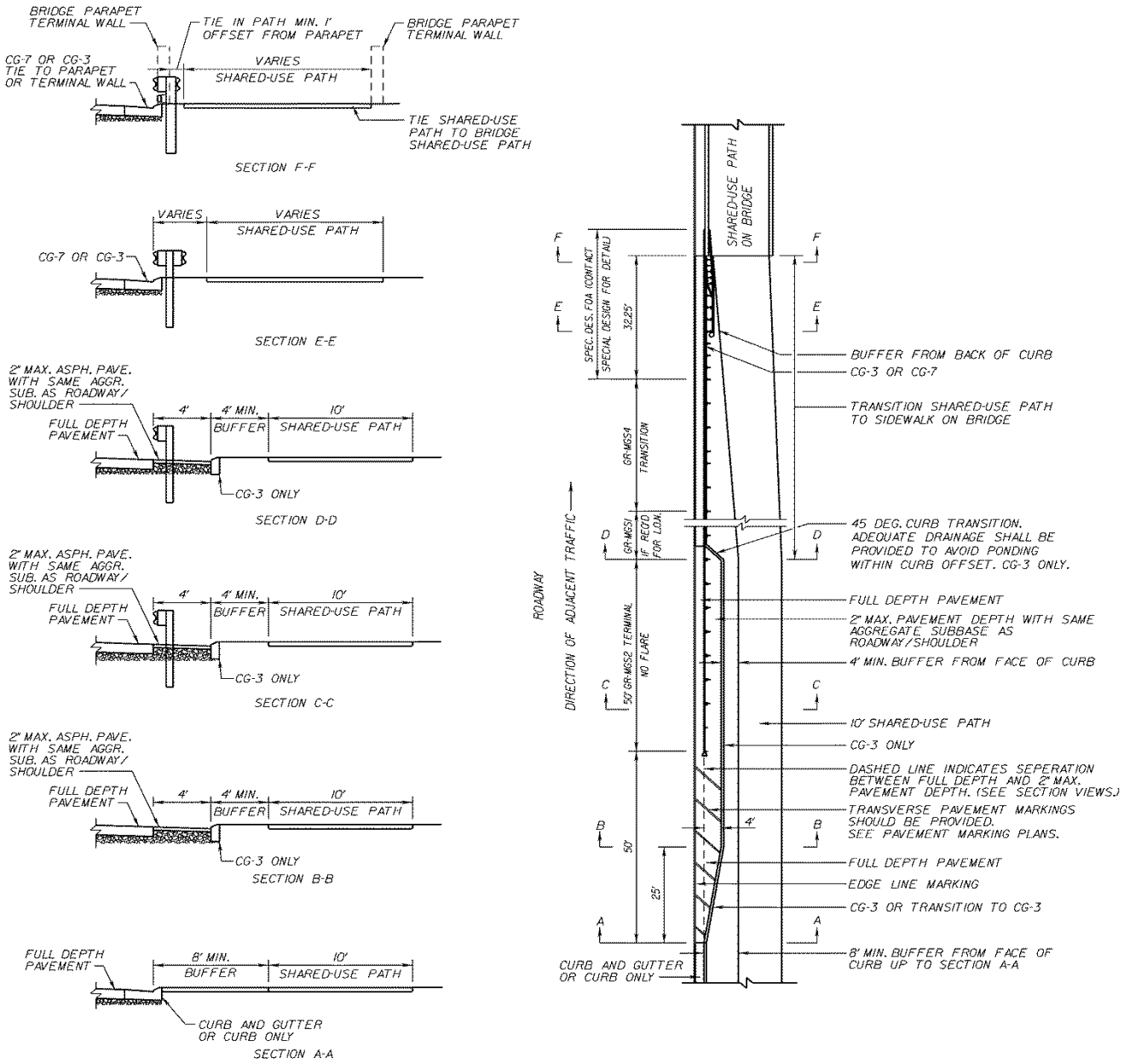

FIGURE J-3-6 SPECIAL DESIGN FOA (MODIFIED FOA-1) AND TYPCIAL CURB OFFSET FOR A TANGENT GUARDRAIL TERMINAL AT A BRIDGE WITH A SHARED USE PATH

PAVEMENT DROP-OFFS WITH GUARDRAIL

For paving operations, no pavement drop-off greater than ½" shall be located from the edge of travel way to the guardrail post. If any paving operation causes the height of existing guardrail to become substandard, then the guardrail shall be upgraded to current Standards per Traffic Engineering Division IIM-TE-366 and IIM-TE-367. Resetting guardrail or adjusting blockouts on existing NCHRP 350 guardrail systems is no longer allowed. If guardrail is removed to accommodate a pavement operation, then the guardrail shall be upgraded to current Standards.

RADIAL GUARDRAIL

Radial guardrail is w-beam railing that is shop curved when the radius is 150 feet or less.

RADIAL END TREATMENTS VERSUS RADIAL GUARDRAIL

Radial end treatments shall not be used as they do not reduce the severity of a crash (e.g., guardrail end at a private entrance). There is a potential for the rail to fold back on itself to form a blunt end. A crash tested terminal shall be installed.

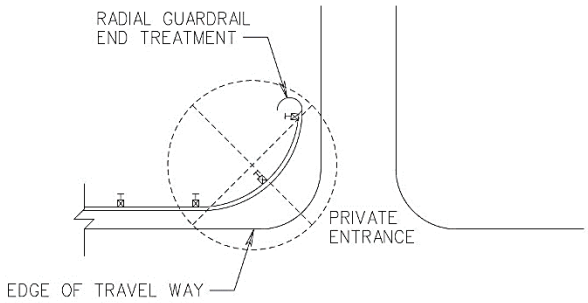

Radial guardrail that connects two railing systems around an intersection can be used to close a gap between the two systems that is hazardous. The area within the anticipated dynamic deflection of the guardrail shall be free of fixed objects with a ground slope no steeper than 2:1. (There is a potential for greater deflections due to the possibility of high angle impacts.)

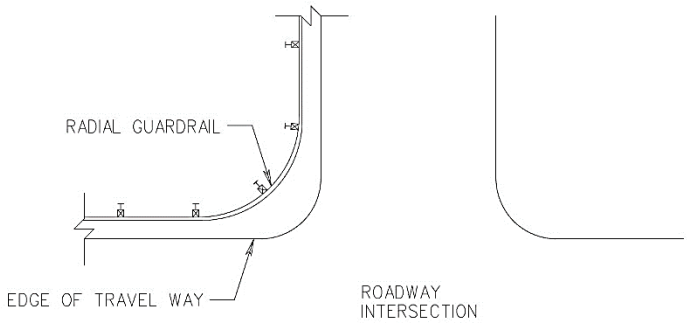

When connecting a bridge parapet to a railing system around an intersection, the necessary fixed object attachment shall be installed in line with the parapet. The guardrail may then connect radial to the intersecting roadways guardrail and shall be terminated with a crash tested terminal. If the FOA cannot be placed in line with the parapet, contact the Standards and Special Design Section for guidance. An impact attenuator may be necessary if there is not enough room for an FOA and properly terminated guardrail.

The radius used for guardrail at an intersection should be as flat as possible. The recommended minimum radius is 50 feet. However, site conditions may dictate the need for smaller radii. The absolute minimum radii for guardrail along high speed roadways shall be 30 feet and for low speed roadways shall be 20 feet. If an intersection should require the use of a radius smaller than above contact the Standards and Special Design Section for guidance. Radial guardrail shall not be used on Interstate Highways or High Speed Freeways.

SECTION J-4 FIXED OBJECT ATTACHMENTS (FOA) AND BRIDGE GUARDRAIL ATTACHMENTS (BRGR)

When substandard FOA's or BR-GR's exist within the limits of construction projects; both FOA's and BR-GR's shall be upgraded or replaced in accordance with the current VDOT Road and Bridge Standard or Special Design BRGR.

FOA

GR-FOA's are designed to help prevent potential vehicular snagging at the immediate upstream, or run-on, end of a bridge parapet or terminal wall which are fixed objects. FOA's can also provide anchorage on run-off ends for downstream guardrail.

GR-FOA's 1, 2, 3, and 4 use nested w-beam, reduced post spacing, and a rubrail. A GR-MGS-4 transition to MGS guardrail is required for GR-FOA's 1, 2, and 3. A design waiver is required if an NCHRP 350 guardrail system is used with these FOA's instead of using an MGS system transitioned to one of them.

The GR-FOA-1 is used with a vertical bridge parapet or terminal wall.

The GR-FOA-2 is used with a safety-shaped bridge parapet or terminal wall.

The GR-FOA-3 design is available as an insertable sheet and is used as a retrofit on existing flared bridge rail terminal walls.

The GR-FOA-4 is used to attach MB-3 2-sided median guardrail to both sides of a safety-shaped concrete barrier. A design waiver is not required since there is not an MGS version of 2-sided median guardrail at this time.

The thrie-beam GR-FOA-5 is the only FOA currently acceptable for use directly with MGS guardrail without using the GR-MGS-4 transition. It consists of nested thrie-beam and reduced post spacing. Since thrie-beam is used, a rubrail is not needed. However, it is only allowed to be used with the CPSR, SSCP, and Kansas Corral vertical face terminal walls.

BRGR

When the proposed design calls for the utilization of an existing bridge having an older type of parapet walls or rails, an appropriate detail showing the "Recommended Method for Attaching Guardrail to Bridge Rails" (BRGR) is to be obtained from the Standards and Special Design Section for inclusion in plans. Details of the existing bridge rail should accompany the request.

The MGS system will have to be transitioned to the BRGR using the GR-MGS4 transition standard.

ENTRANCES OR CONNECTIONS ADJACENT TO A BRIDGE

When entrances or connections cannot be relocated or eliminated and are located adjacent to a bridge in areas with dense entrance locations, it may be necessary to install an impact attenuator since an FOA or a BRGR with a standard guardrail terminal may not fit. Plans fitting this criteria are to be submitted to the Standards/Special Design Section for review, approval and details.

Additional guardrail upstream of an entrance may provide some protection for secondary hazards such as bodies of water as shown below.

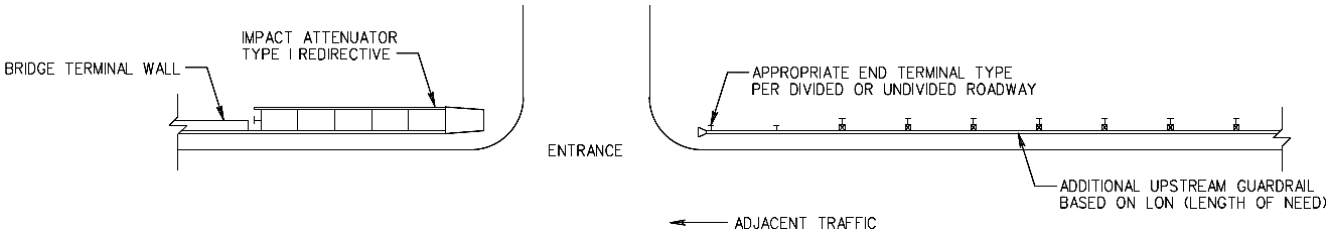

SECTION J-5 SAFETY / MAINTENANCE PROJECTS

When developing details for a Safety or Maintenance project, care must be taken to ensure proper barrier installation/maintenance/replacement to upgrade any outdated locations. There may be locations on a project where the guardrail has not been hit, but the installation may not be the safest that can currently be provided if an errant vehicle impacted the guardrail. Traffic Engineering Division shall perform a site assessment where attention should be given, but not limited to the following factors in evaluating these locations:

(1) Location of barrier:
- relative to hazard
- relative to pavement
- relative to shoulder break point
- relative to fixed objects

(2) Eliminating or shortening existing run of barrier:
- remove or relocate fixed objects
- regrade to flatten fill slopes
- verify Length of Need (LON)

(3) Type of guardrail used:
- sufficient space for maximum deflection for type used
- proper installation and height to effectively function
- proper transitions used

(4) Terminals:
- proper end treatment on both ends of a run of barrier
- proper installation and height to effectively function
- proper transitions
- replace substandard terminals with approved terminals.
- at bridges/walls, guardrail terminals should not be located closer to the roadway than the bridge rail or wall (fixed object attachment or BRGR is required to connect the rail to the bridge rail or wall)

(5) Shoulder width and site preparation:
- provide sufficient width for site preparation
- provide additional fill if necessary for proper flare installation
- provide clear run-out area behind terminal installation

(6) Fixed object attachments:
- current Standard/BRGR attachments to fixed objects (such as bridges/walls)
- guardrail alignment with bridge rail so that the end of the bridge with the fixed object attachment will not become an additional hazard
- proper transitions to gradually stiffen the overall approach