CHAPTER 2E – PHASE III, FIELD INSPECTION

TABLE OF CONTENTS

SECTION 2E.1 SOIL SURVEY AND PAVEMENT DESIGN

Soil Survey and Pavement Design Received 2E-1
Resolution of Borrow / Surplus and Unsuitable Material 2E-1

SECTION 2E.2 DETAILED DRAINAGE DESIGN

General 2E-7

SECTION 2E.3 DETAILED PLAN DESIGN

Curb and Gutter 2E-8
Curb 2E-9
Medians 2E-9
Staking for Concrete Items 2E-11
Fence 2E-15
Retaining Walls 2E-17
Retaining Wall Excavation 2E-18
Retaining Structures 2E-21
Reinforced Soil Slope (RSS) Standard 2E-21
Sound Barrier Wall Design Procedures 2E-24
Steps and Handrails 2E-27
Sidewalk 2E-28
Sign Islands 2E-28
Railways: Adjacent Highway Design Considerations 2E-28
Bicycle Facilities 2E-30
Greenways 2E-30
Underdrains 2E-30
Demolition of Existing Pavement and Obscuring Roadway 2E-31
Grading Summary 2E-34
Tree Walls and Tree Wells 2E-35
Labeling Incidental Items 2E-35
Pedestrian Ramps 2E-35
Curb and Curb and Gutter 2E-35
Grading Contours 2E-36
Construction of Cattle Passes 2E-36
Historical Marker Relocation 2E-37

SECTION 2E.4 SHOWING BRIDGE LIMITS ON PLANS

Determining Approximate Length of Bridge 2E-38
Determining Approximate Width of Bridge 2E-38
Depicting on Plans 2E-38

SECTION 2E.5 PROPOSED RIGHT OF WAY AND LIMITED ACCESS

Determining Proposed Right of Way Encompassing Slope Limits 2E-39
Determining Proposed Right of Way with Slope Easements.....2E-40
Determining Slope Easements.....2E-40
Determining Permanent Easements 2E-41
Temporary Construction Easements.....2E-42
Utility Easements 2E-43
Limited Access Establishment and Change Guidelines 2E-47
Limited Access Lines 2E-51
Limited Access Fencing 2E-51
Depicting Limited Access Right of Way.....2E-52
Determining Surplus Right of Way 2E-55
Right of Way Description Furnished to Environmental Division.....2E-56
Plan Revisions 2E-57

SECTION 2E.6 PREPARATION OF SUPPLEMENTAL SHEETS

Title Sheet.....2E-58
Identification.....2E-58
Layout 2E-59
Description 2E-60
Project Length Tabulation Block.....2E-60
Functional Classification -Traffic Data.....2E-63
Notes.....2E-64
Project Section Numbers.....2E-64
Index of Sheets 2E-66
Project Location Map 2E-68
Right of Way Data Sheet.....2E-68
Typical Section Sheet(s) 2E-69
Hydrologic Data Sheet 2E-71
Design Features Note 2E-73
Additional Notes.....2E-73

SECTION 2E.7 CONSTRUCTION COST ESTIMATE

Estimating Quantities – Preparation of Estimate 2E-74

SECTION 2E.8 CONSTRUCTABILITY QUALITY REVIEW

Constructability Quality Review.....2E-75

SECTION 2E.9 DISTRIBUTION OF FIELD INSPECTION PLANS

Plan Assembly 2E-76

SECTION 2E.10 FIELD INSPECTION

Holding Field Inspection.....2E-78
Safety Items and Sequence of Construction 2E-78
Request For Special Design Drawings.....2E-79
Request For Sound Barrier Wall Designs.....2E-80

Bridges 2E-80

SECTION 2E-11 REQUEST FOR ADDITIONAL SURVEY DATA
Procedure for Request 2E-81

SECTION 2E.12 DISTRIBUTION OF PRINTS
Procedure.....2E-82

SECTION 2E.13 UTILITY FIELD INSPECTION
General 2E-83

LIST OF FIGURES

Figure 2E-1 Plan Development / Reolution of Borrow/Surplus & Unsuitable Materials ..2E-4
Figure 2E-2 Typical Method of Placing Unsuitable Materials 2E-5
Figure 2E-3 Incorrect Method of Placing Unsuitable Materials.....2E-5
Figure 2E-4 Typical Method of Showing Placement of Unsuitable Materials on Plans ..2E-6
Figure 2E-5 Typical Straight Line Taper Lane.....2E-12
Figure 2E-6 Method of Showing Radial Offet, Turn Lanes and Bullet Noses on Plan Sheets 2E-13
Figure 2E-7 Sample Tabulation of Data 2E-14
Figure 2E-8 Retaining Wall Excavation.....2E-19
Figure 2E-9 Porous Backfill (separate Payment) 2E-19
Figure 2E-10 Porous Backfill Included Payment 2E-20
Figure 2E-11 Sample Reinforced Soil Slope Design.....2E-23
Figure 2E-12 Curb / Curb and Gutter Section Detail 2E-25
Figure 2E-13 Shoulder Section Details 2E-26
Figure 2E-14 Profile for Proposed Retaining Wall.....2E-27
Figure 2E-15 Demolition of Pavement.....2E-34
Figure 2E-16 Demolition of Untreated Pavement.....2E-34
Figure 2E-17 Historical Marker Pull Off Area 2E-37
Figure 2E-18 Depicting Temporary Construction Easement Around Entrances.....2E-43
Figure 2E-19 Depicting Limited Access Right of Way 2E-53
Figure 2E-20 Depicting Limited Access Right of Way 2E-54
Figure 2E-21 Surplus Right of Way.....2E-55
Figure 2E-22 Measuring “D” Limits on Plans.....2E-62
Figure 2E-23 Construction Type Code for Highway Improvements 2E-65
Figure 2E-24 Grading Line Below Pavement 2E-71
Figure 2E-25 Sample Hydrologic Data Sheet for No Plan Project.....2E-72

SECTION 2E.1 SOIL SURVEY AND PAVEMENT DESIGN

SOIL SURVEY AND PAVEMENT DESIGN RECEIVED

Soil survey and pavement design recommendations are not always received prior to field inspection. Should they be received just prior to the field inspection, every effort should be made to have the recommendations included in plans prior to printing. In some cases, the field inspection will be held based on the preliminary pavement design without the benefit of the soil survey. (See Section 2E.6-TYPICAL SECTION SHEET)

RESOLUTION OF BORROW / SURPLUS AND UNSUITABLE MATERIAL

VDOT's *Road and Bridge Specifications* requires that the contractor deposit unsuitable and surplus material off the project if the plans do not require that the material be placed within the right-of-way.

The procedural flow chart (See Figure 2E-1) is self-explanatory in the development of plans to resolve the disposition of materials on either borrow or surplus projects in connection with disposal areas and borrow pits.

The non-environmentally sensitive fill areas within the limits of a project should be reviewed for possible locations to dispose of unsuitable material. Do not place disposable material in areas where retaining walls or sound walls will be used. Check all proposed drainage items pertinent to this procedure. In some instances, the Materials Division will recommend that disposable material be placed in the bottom of fills; however, the available areas may or may not satisfy the volume of material to be disposed. The designer must therefore look to other methods of placing this material along with the placement of surplus root mat material that may be disposed of by using it to cover fill slopes. Placement of unsuitable material in fills is limited to an elevation 6 feet below the top of the proposed subgrade at the side slope. This will prevent entrapment of moisture in the embankment below the pavement structure (See Figure 2E-2). Unsuitable material is defined as highly plastic clay soil (PI $\geq$ 35). Wet material (moisture content $>$ 30 percent above optimum moisture content), muck, peat, and other deleterious material. Organic material (stumps, tree trunks, limbs, roots, leaves, grass cuttings) shall not be disposed of on slopes. A plan for disposal of all unsuitable material shall be submitted by the Contractor to the Engineer at least 7 days prior to disposal for review.

Inorganic material such as brick, cinder block, broken concrete, (without exposed reinforcing steel) asphaltic concrete, rock or other such material may be disposed of in fills.

Consideration should be given to flattening slopes using borrow on top of unsuitable material instead of installing guardrail (Exception: When major slopes of 3:1 and flatter will provide an acceptable condition for a vehicle leaving the roadway. Provide recoverable 6:1 slope when possible (See *Appendix A1* for guidelines). Gore areas of ramps and median areas of divided facilities (unless they are used for stormwater management) are prime areas for placing disposable material. (See Figures 2E-2 and 2E-4)

It is also likely that in some cases, such as the placement of unsuitable material in the bottom of fills, that borrow can be reduced, thereby reducing the cost of a project. Another case would be in the area between the normal and the proposed flatter safety slope.

In no case should a vertical line be used to separate the good material from the unsuitable material (See Figure 2E-2). Roadway compaction must be obtained over the width of the normal roadway section from toe to toe of fill.

Unsuitable material placed outside the normal roadway section will not normally require the standard practice for compaction of fills. If concurrence is received from the Materials Engineer to waive density requirements of fill material placement outside the normal roadway section, then the following note is to be shown with the typical sections denoting the method of placing unsuitable material, giving location, station to station, etc.

Note: "The density requirement for embankment will be waived in the placement of unsuitable material."

When the shoulders are being constructed of commercial material, this material should be extended to intersect the flatter slope (See Figure 2E-2).

Figure 2E-4 is a sample plan that has been prepared to denote, by a series of double hatched lines, the designated area for the placement of unsuitable material on slopes of a roadway facility being constructed in fills. Typical sections showing the theoretical methods to be used for the placement of such materials are to be included in the plans, along with the roadway typical sections. The designer is reminded to check all proposed drainage items pertinent to this procedure.

In essence disposal of unsuitable material within the project limits eliminates the need to haul the material to a waste site, which should reflect in the unit price for regular excavation. There could be a savings in right-of-way cost to acquire the site, if one is not available.

Borrow excavation is reduced in some cases, depending on the position the material is placed within the roadway fill section. With flatter slopes, some guardrail may be eliminated, reducing costs and providing a safer facility. The designer should make a careful analysis of where the unsuitable material is being removed and where it is to be placed to determine if a double haul will be required. If a double haul is required, it could make the design uneconomical due to the extra cost in handling and stockpiling. Consequently, once the soil survey is available, the method of disposing of unsuitable material must be reviewed and approved by the District *Engineer/Administrator or his/her designated representative.

When root-mat is disposed of by using it to cover fill slopes, the following note is placed on the plans on the grading diagram and summary sheet:

> "_____ Cu. Yds. of Root-mat topsoil is to be stockpiled and used for covering fills to a depth of ____inches. Placement is limited in all situations to an elevation of at least 6 feet below the top of the proposed subgrade at the side slope and at locations where and as directed by the Engineer. All debris which would impede mowing operations is to be removed from the top 10 feet of the fill slope."

The designer is to adjust the depth used in an effort to use up the supply of root-mat. Removal and stockpiling root-mat is paid for as regular excavation and the basis of payment for spreading is to be "Topsoil Class A," by the acre.

The Grading Diagram and Summary, as discussed in *Section 2G.2-SUMMARY SHEETS* provides guidelines in arriving at usable cut quantities when using the Grading Diagram method.

* Rev. 7/15

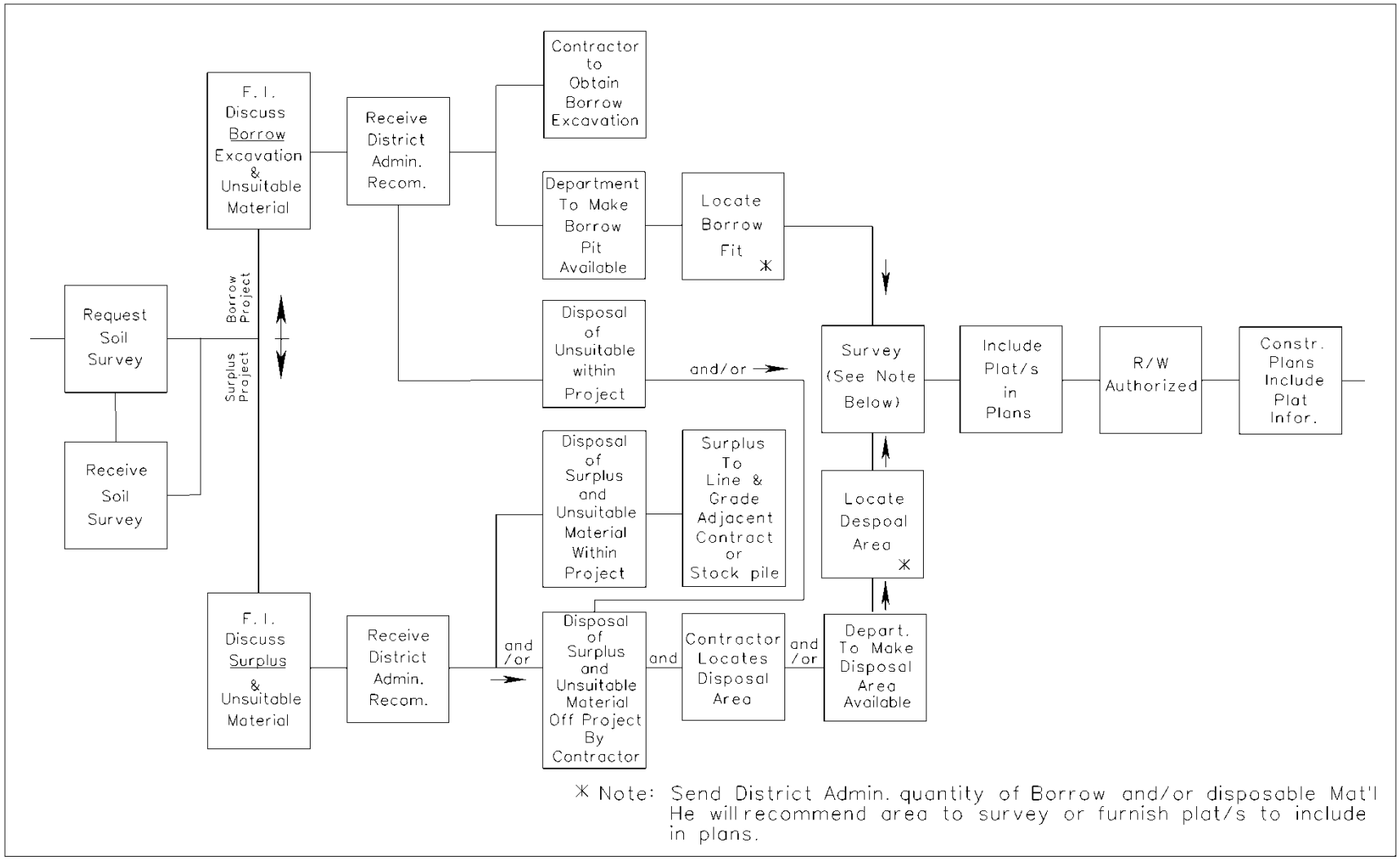

FIGURE 2E-1 PLAN DEVELOPMENT / REOLUTION OF BORROW/SURPLUS & UNSUITABLE MATERIALS

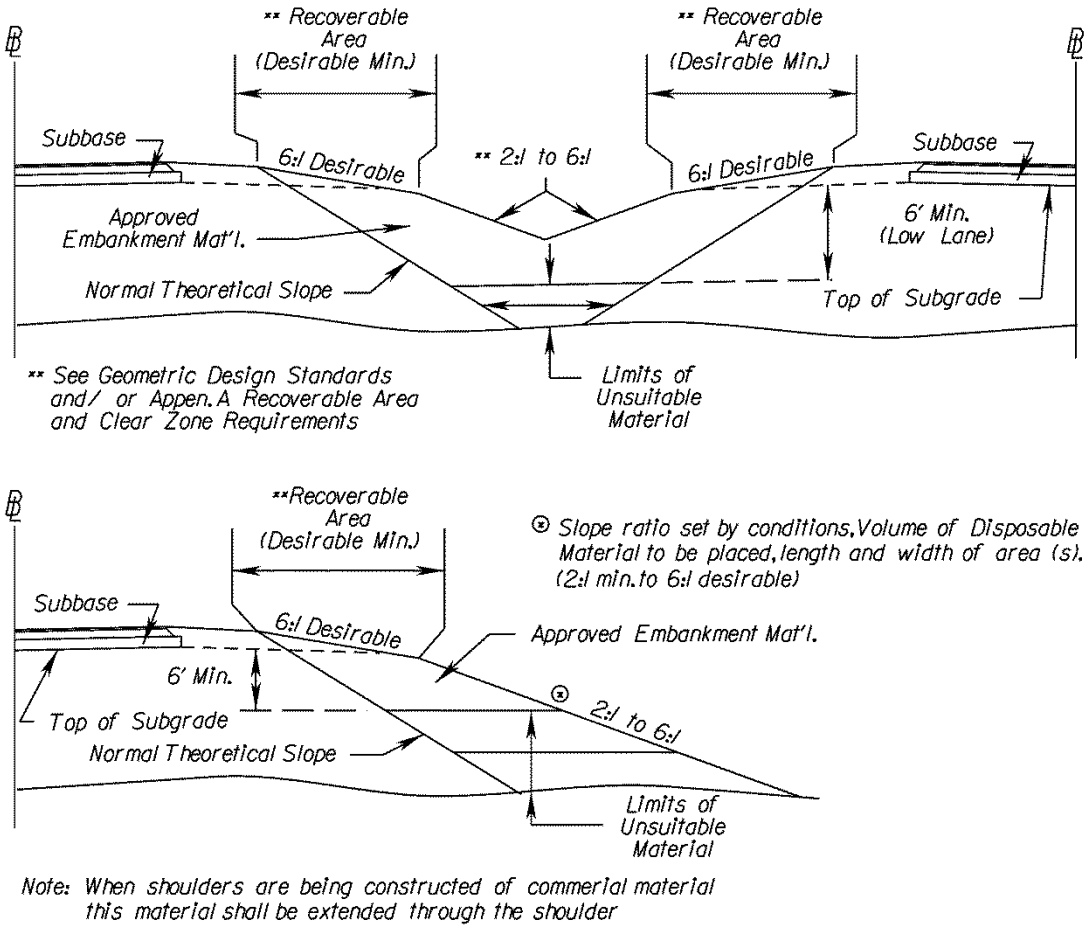

FIGURE 2E-2 TYPICAL METHOD OF PLACING UNSUITABLE MATERIALS

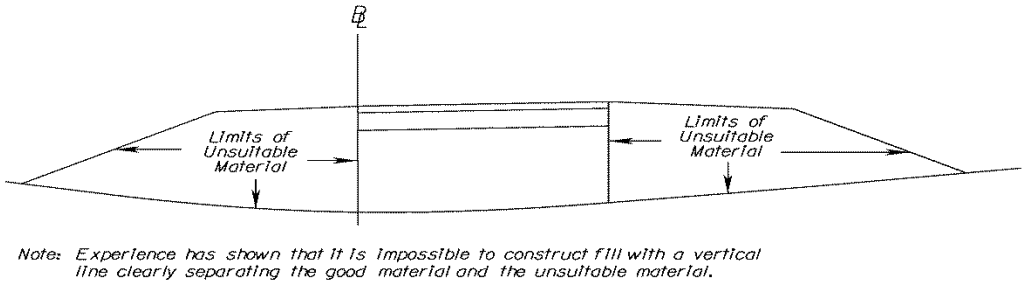

FIGURE 2E-3 INCORRECT METHOD OF PLACING UNSUITABLE MATERIALS

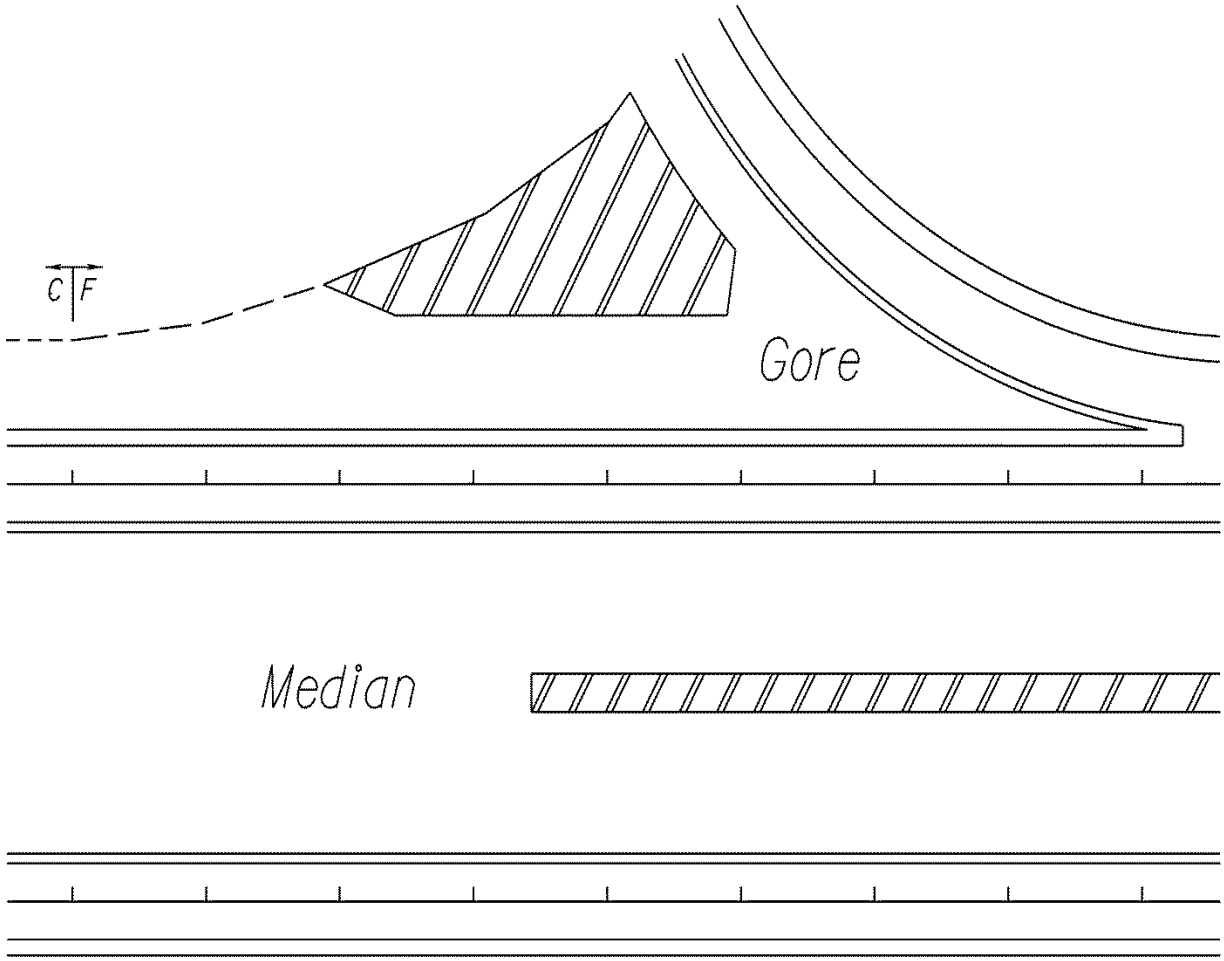

FIGURE 2E-4 TYPICAL METHOD OF SHOWING PLACEMENT OF UNSUITABLE MATERIALS ON PLANS

SECTION 2E.2 DETAILED DRAINAGE DESIGN

GENERAL

Refer to the VDOT *Drainage Manual*.

SECTION 2E.3 DETAILED PLAN DESIGN

CURB AND GUTTER

(Also see "Mountable Curb and Curb and Gutter", page 2E-35)

Curb and gutter on Urban projects will be specified on *PM-100* (Initial Field Review and Scoping Report). This is the Location and Design Division's authorization to incorporate curb and gutter in the plans. On other projects, curb and gutter will generally be specified only as replacement in kind or as determined at the Preliminary Plan Review.

When using an urban roadway typical section which includes curb and gutter and sidewalk, several design elements should be addressed. Following is a list of the most important items:

1. Will the utility poles be placed back of the sidewalk? While there is a safety advantage to placing poles back of the sidewalk, care must be taken to accommodate the pole cross arm with additional right-of-way and to be sure that local building codes are not violated by placing poles too close to existing buildings.
2. Proposed storm drainage should generally be accommodated under the proposed roadway. The preference of the municipality involved should be considered in this regard.
3. In some instances, retaining walls placed back of the sidewalk can also be in conflict with proposed drainage pipe and/or utilities.
4. The location of traffic signal poles and the need for additional right of way to accommodate them is to be considered.
5. The location of Curb Ramps is of prime consideration (See *IIM-LD-55*).
6. The accommodation of rural type mailboxes must be considered on some projects.
7. The location of guardrail and the need for additional right of way to accommodate the guardrail is to be considered. Fills may need to be widened if guardrail is required. (*See Appendix J*)

St'd. CG-6 or CG-7 Curb and Gutter is to be specified based on design speed. If a municipality requests the use of their own design, the request is to be forwarded by Local Assistance Division to the State L&D Engineer for review and approval. For a municipality's own design, details are to be shown on the typical sections and the basis of payment is to be their standard; for example: Norfolk St'd. Curb and Gutter.

Deleted Information*

* Rev. 7/18

Curb and gutter is to be plotted to scale in a line weight heavy enough to readily reproduce and stand out over existing items, but not so heavy as to lose details. At street intersections, the face of the radial curb returns should have a minimum 30 feet radius where this can be accomplished with minimum impact on adjacent property. Curb return profiles are to be furnished along the face of curb for all curbs with 30 feet radii and greater (Not applicable to Appendix B). Curb Ramps are to be provided in each quadrant of each intersection or at authorized crosswalks where sidewalk or sidewalk space is provided in conjunction with curb (See *IIM-LD-55* for additional Curb Ramp instructions).

CURB

(Also see "Mountable Curb and Curb and Gutter")

Curb is shown in conformance with the *Road and Bridge Standards* in the "CG" or "MC" standards for various uses.

Curbs are to be depicted similarly to the previous instructions for curb and gutter.

MEDIANS

(Also see "Mountable Curb and Curb and Gutter")

A median is defined as the portion of a divided highway separating the traveled way for traffic in opposing directions. The median width is expressed as the dimension between the through-lane edges and includes the left shoulders, if any. Some of the more common functions of a median are to:

1. Separate opposing traffic
2. Provide a recovery area for out-of-control vehicles
3. Provide a stopping area in case of emergencies
4. Allow space for speed changes/storage of left turning vehicles
5. Provide width for future lanes
6. Minimize headlight glare
7. Offer open green space and areas for landscaping
8. Provide refuge for pedestrians

Medians may be depressed, raised or flush with the pavement surface. The general range of median widths is from 4 feet minimum raised median in urban areas to 60 feet or greater depressed median in rural areas. A wide median between traffic moving in opposing directions is safer and more comfortable for the motorist than head-to-head traffic close together.* Notable exceptions to this are at-grade intersections, where wide medians may cause drivers to become confused over the operational characteristics and the increased time for vehicles to cross the median may lead to inefficient signal operation. However, it may be necessary in urban areas where right of way is more costly to provide a narrower

* Rev. 7/15

median with a positive barrier while maintaining the required shy line. Economic, environmental and land use factors also may limit the width of median that can be provided.

Therefore, in the selection of a median width, the function(s) the median is to serve must be thoroughly evaluated and balanced with the economic, environmental and other impacts.

Depressed median widths of 60 feet or greater are preferred on freeways and other high speed rural principal arterials with shoulders and ditches where greater separation of opposing traffic is desired. A 60 foot median allows for two future inside travel lanes, left (inside) shoulders, barrier and more efficient drainage and snow removal. Side slopes should be 6:1; however, 4:1 slopes may be adequate based on *Appendix A1* GS Standards. When depressed medians are used on higher speed facilities, such as freeways and other high speed principal arterials, a median barrier is not necessary as long as the median is wide enough to provide the required clear zone and recovery area (see AASHTO's *Roadside Design Guide* for selection and use of median barriers). Additional clearance may be required to provide the minimum stopping sight distance along the median lane on relatively short radius curves, when a median barrier is used.

Raised medians have application in urban areas with curb or curb and gutter where it is desirable to regulate left turn movements. Raised medians have been found to be advantageous under the following conditions:

1. High volume of through traffic
2. Little strip development or mid-block left turn demand
3. Reasonable indirect access available to serve adjoining properties
4. Undeveloped areas composed of large land parcels
5. Areas where sight distance limitations prevent the use of a two-way left-turn median
6. When at least 6 feet wide can serve as a pedestrian and bicycle refuse area by reducing pedestrian exposure to traffic and crash risk by allowing them to wait in the median before continuing to cross the roadway.*

For new construction, the minimum raised median width in urban areas with a curb or curb and gutter is 40 feet. A 40 foot median allows for two future inside lanes and a 16 foot raised median. The 16 foot raised median then allows for a future left turn lane with a 4 foot raised median remaining. The wider the median, the better, but with particular attention being given to the operational characteristics of at-grade intersections. Also, clear zone requirements for a particular facility should have significance in the assessment of the median width. Medians narrower than 4 feet are not desirable, in part because of the difficulty in mounting signs within the median in accordance with the *MUTCD*.

The curb of raised medians shall be offset 1 foot from the through lane edge. Raised medians should have a minimum width of 4 feet. When the raised median's primary purpose is to provide space for speed change/left turn storage, the minimum width shall be the required lane width plus 4 feet (i.e. 12 foot lane + 4 feet = 16 feet total width).

* Rev. 1/19

All raised medians wider than 6 feet are to be seeded, unless they are deemed to create an unnecessary maintenance problem.

Flush medians shall be used only on low speed roadways where there are no more than two through lanes in each direction. They are often used as two-way left-turn lanes. Two-way left-turn medians are most beneficial under the following conditions:

1. Areas of strip development generating large mid-block left-turn demand
2. Areas with numerous small land parcels and many driveways
3. Sections with less than 12 public streets per mile
4. In corridors where operational flexibility is needed for future development and/or traffic needs

The minimum width for this application shall be 13 feet, which is an 11 foot lane plus 2 feet for a solid yellow line and a dotted yellow line on each side of the 11 foot lane.
Left turn lanes for all median widths are to be designed using controls shown in *Appendix F, Section 3-TURNING LANES.*

Raised medians or median barriers are to be shown on plans in accordance with VDOT's, *Appendix I* and *Road and Bridge Standards* and as shown on the approved preliminary design.

STAKING FOR CONCRETE ITEMS

Formed concrete items, such as curb and gutter, curb, median crossovers, straight line tapers, turn lanes, and channelization require that sufficient station pluses, offset distances, and radii be shown to the face of curb to insure that the project is constructed as proposed and to assist the survey party in staking out the project. This information is usually computed by the designer in order to properly show the design on the plans; therefore, the desired information is readily available and should be included in plans. Be sure that sufficient offsets, pluses, and radii are shown to insure that the staking party can set stakes without field computations.

To more clearly show the required information on the plans and to reduce plan clutter, minimal data is to be shown on the plans with the remaining data shown in tabulation form on a series 2 plan sheet. Figures 2E-6, and 2E-7* denote a typical straight-line taper detail, the method of showing the required information on the plan sheet, and the minimum data that is to be included in the tabulation of data for reverse curve turn lanes and radial offsets.

When reverse curve transition are dictated by local policy, offsets to the reverse curves at maximum 25 feet intervals along the transition radii of the turn lane are to be provided, in addition to the reverse curve lengths, radii, and begin and end stations with offsets. The radii for these reverse curves should be set using radius lengths such as 200 feet (most commonly used), 150 feet, or 100 feet to provide consistent radii intervals for the contractor. The length of transition for these three radii with a 12 feet offset only varies from 97 feet to 84 feet to 68 feet. Therefore, other odd radii may only cause problems in forming concrete.

---

* Rev. 7/16

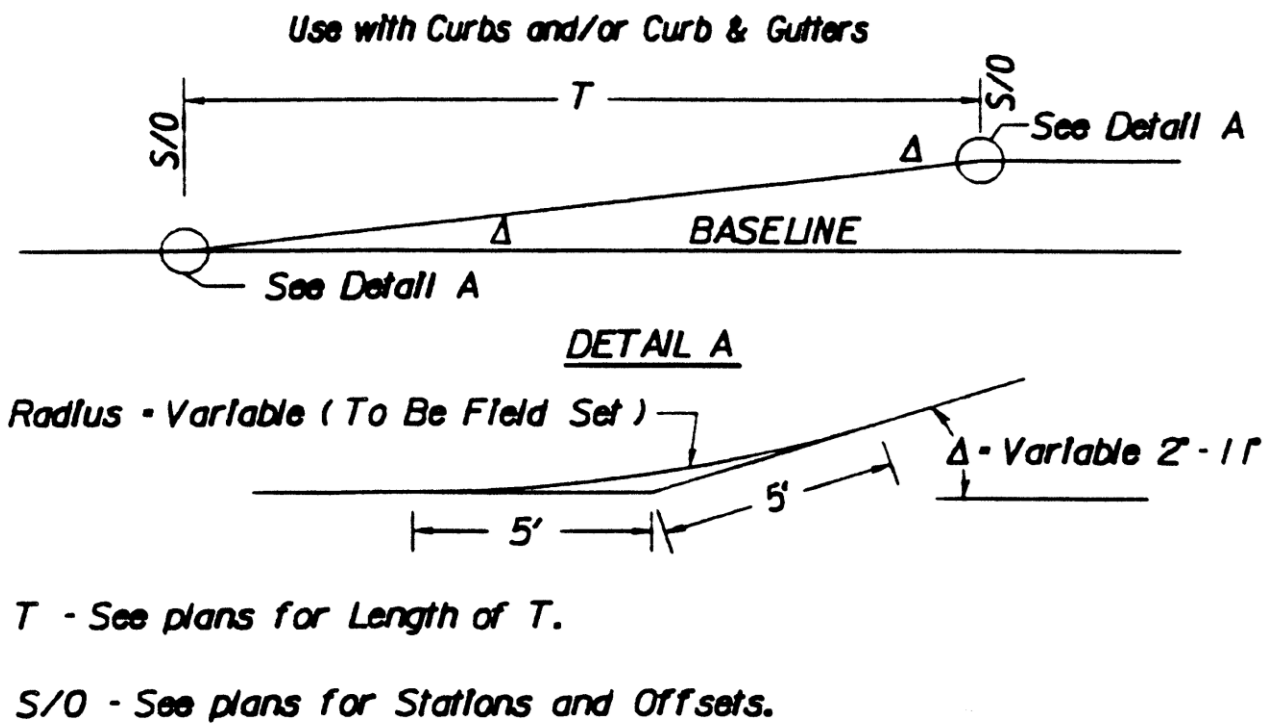

FIGURE 2E-5 TYPICAL STRAIGHT LINE TAPER LANE

See Figures 3-1, 3-2, 3-3 and Table 3-1 in *Appendix F* for length of taper requirements.

The following note is to be included on the General Notes Sheet, under incidentals, when straight-line taper lanes are used in curb and/or curb and gutter sections.

I-17 For method of constructing straight-line taper lanes in curb and/or curb and gutter sections, see typical details on sheet__.

The Typical Straight-Line Taper Lane detail is to be shown on a number 2 series Typical Section, Detail or Summary sheet when required.

When used for right turn lanes on urban projects with parallel R/W behind the C & G or sidewalk, the R/W shall be clearly labeled to assure that the desired R/W is obtained.

For method of showing required information on roadway plan sheets, see Figure 2E-7*.

* Rev. 7/16

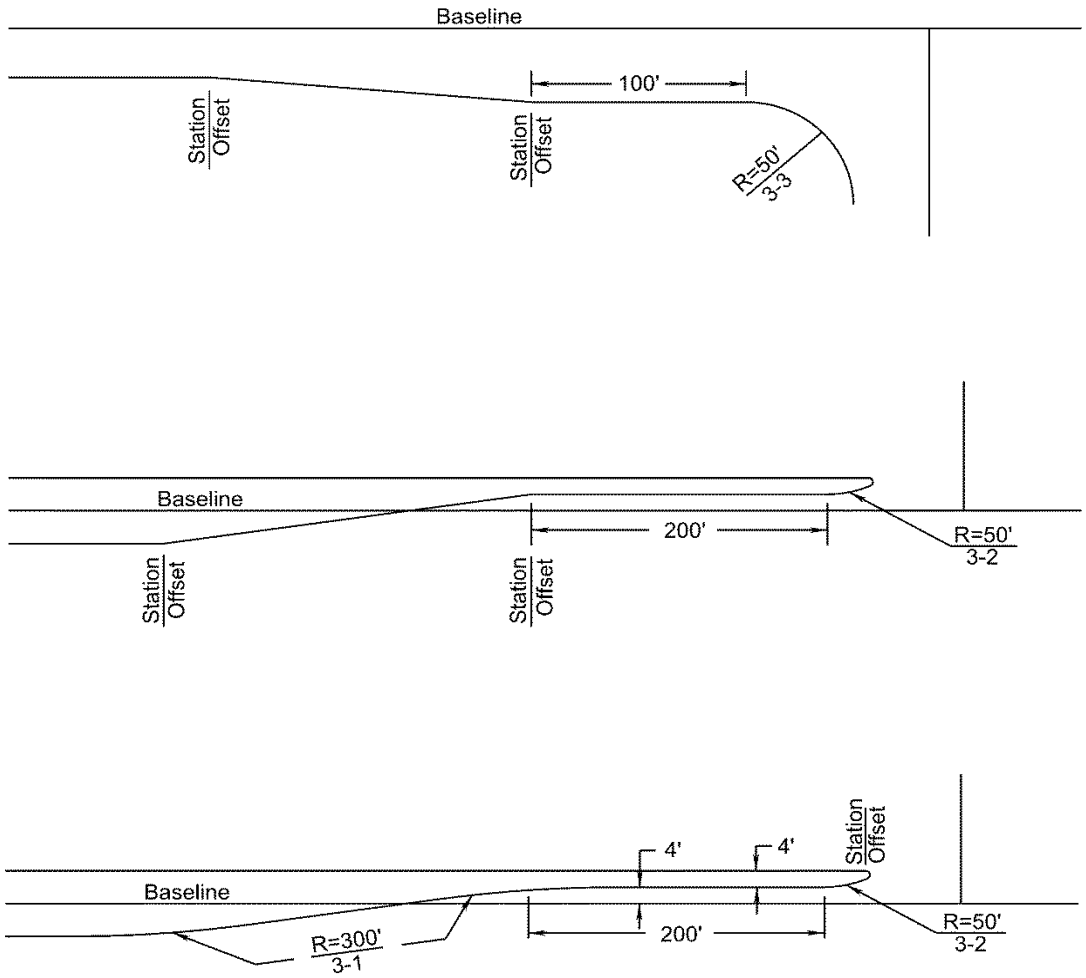

REQUIRED INFORMATION

Radial Offset . . . . Radius and Reference No.

Turn Lanes . . . . . Radii, Reference No. and Full Turn Lane Length

Taper Lanes . . . . Begin and End Stations and Offsets

Bullet Noses . . . . Main Radius and Reference Number

FIGURE 2E-6 METHOD OF SHOWING RADIAL OFFET, TURN LANES AND BULLET NOSES ON PLAN SHEETS

RADIAL OFFSETS / BULLET NOSE DATA

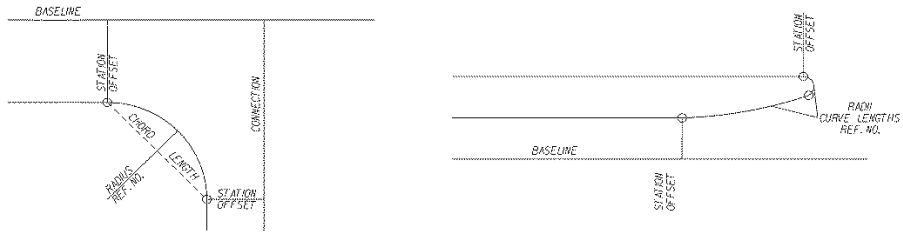

LOCATION (REF. NO.)	BASELINE		CONNECTION		RADIUS LENGTH	CHORD LENGTH	CURVE LENGTH	LOCATION (REF. NO.)	BASELINE		CONNECTION		RADIUS LENGTH	CHORD LENGTH	CURVE LENGTH
SHEET - ITEM	STATION	OFFSET	STATION	OFFSET	FEET	FEET	FEET	SHEET - ITEM	STATION	OFFSET	STATION	OFFSET	FEET	FEET	FEET
3-2	1005+18.06	39.28	Rogers 39+45.04	34.57	50	37.85	38.61	3-13	400+97.70	12 R			52	6.72	6.74
3-3	1006+53.65	45.06	Rogers 39+06.64	14	50	73.64	82.71		401+90.82	12 R					
3-4	1009+04.50	54.06	Extr. 10+10.92	17	50	72.25	80.74	3-14	401+03.20	12 R			987	388.06	390.35
3-5	1010+32.29	57	Extr. 100+98.79	17	50	66.06	72.16		404+95.00	12 R					
3-6	1004+64.20	25.29	Bennett 40+37.43	44.79	325	79.13	79.33								
3-7	1005+42.91	37.87	Bennett 40+78.20	12	50	54.88	58.10	4-1	1028+59.62	45	Extr. 11+19.01	12	50	69.52	66.25
3-8	1006+60.63	57	Bennett 41+24.91	14	50	79.24	96.48	4-2	1029+16.98	48.26	Extr. 11+23.87	12	74	37.87	38.30
3-9	1009+05.68	13.95 R			13.95	27.88	45	4-3	1031+33.20	45	PF2 10+47.39	32.26	35	24.36	25.05
	1009+09.68	13.95 L						4-4	1031+56.26	53.62	PF2 11+04.91	14	100	60.43	61.39
3-10	1006+35.66	14 R			8	16	25.74	4-5	1032+55.38	21.24	PF2 10+88.47	12	50	77.31	86.38
	1006+35.66	2.06 L						4-6	1033+09.96	45	Cyclone 10+95.00	26	50	70.71	78.54
3-11	1009+67.30	13.25 R			60	49.19	50.69	4-7	1033+59.96	41.58	Cyclone 11+06.61	14	60	84.87	94.27
	1010+12.81	8.32 L						4-8	1033+32.36	2 R			8	16	25.13
3-12	1010+26.99	14 R			2	4	6.28		1033+32.36	14 L					
	1010+26.99	10 R													

TURN LANES - REVERSE CURVE DATA

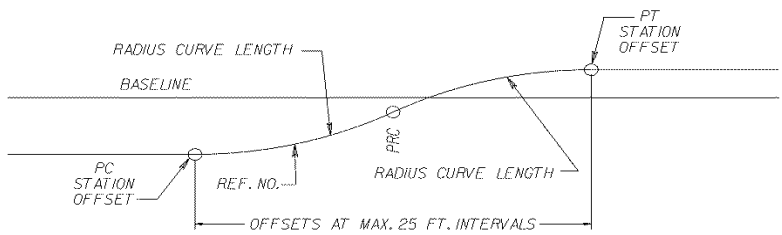

LOCATION (REF. NO.)	BASELINE	REVERSE CURVE	OFFSET	L OR R	CURVE LENGTH	RADIUS	LOCATION (REF. NO.)	BASELINE	REVERSE CURVE	OFFSET	L OR R	CURVE LENGTH	RADIUS
SHEET - ITEM	STATION	POINT	FEET		FEET	FEET	SHEET - ITEM	STATION	POINT	FEET		FEET	FEET
3 - 1	10+15.00	PC	8.00	L	49.11	200'							
	10+25.00		7.75										
	10+50.00		4.91										
	10+63.62	PRC	2.00		49.11	200'							
	10+75.00		-0.50										
	11+00.00		-3.62										
	10+12.24	PT	-4.00										

FIGURE 2E-7* SAMPLE TABULATION OF DATA

* Rev 7/16

FENCE

Proposed fence is to be shown on previously determined fenced limited access projects as submitted on the approved preliminary design.

Proposed fenced right of way and limited access lines are denoted by showing "X"s along a solid line.

Limited Access Control Fence shall be placed either on the right of way and limited access line or inside the right of way line. See Figures 2E-19 and 2E-20.*

Proposed fence or fenced limited access lines, where they deviate from proposed right of way lines, are denoted by a dashed line with "X"s between dashes, in a heavier line than existing fence.

Normally, chain link fence (Standard FE-Cl Chain Link) is used within municipalities or other urbanized areas and woven wire fence, also known as farm fence (Standard FE-W1) is used in rural areas. The type of fencing to be used should always be discussed at the project Field Inspection to assure compliance with local ordinances. Hazardous conditions (barbed wire) should not be created in areas where there will be pedestrians.

Plans are to specify Standard FE-W1 for farm fence, except where specifically recommended otherwise (spacing of vertical strands) as a result of field inspection.

Vinyl coated fence (Standard FE-CL Vinyl Coated) may also be used in lieu of chain link fence (Standard FE-CL Chain Link) in urbanized areas.

All limited access roadways are required to be fenced, except where natural terrain prohibits access. Each project shall be studied individually to determine if the fence can be eliminated in locations where deep cuts, high fills, rivers, streams, or other natural means prohibit access. Areas where sound barriers are proposed near the right of way line should be examined to determine the possibility of eliminating fencing beyond the sound barrier at the normal fence line. Otherwise, permanent easements may be required for maintenance.

The maintenance requirements of the sound barrier should be thoroughly discussed at the project field inspection to determine if the fence can be eliminated.

When it is recommended **not** to fence limited access lines, each such location is to be thoroughly reviewed and discussed by the project development team at the project Field Inspection. The Project Manager is to request approval for any such exemptions from the State Location and Design Engineer, or his or her designee.

The above policy is in accordance with *An Informational Guide on Fencing Controlled Access Highways* - AASHTO 1990.

---

* Added 1/21

Fencing of Stormwater basins may occasionally be needed and should be used when:

1. Basin's ponded depth is greater than 3 feet and/or has side slopes two or more side slopes steeper than 3:1; or
2. Basin is in close proximity to schools, playgrounds or similar areas where children may be expected to frequent; or
3. Recommended by the Field Inspection Report or the city/county (where city/county will take over maintenance responsibility.)

Metal fencing adjacent to an airport sometimes interferes with airport traffic control radar by causing erroneous display on the radar screen. In order to avoid this potentially dangerous situation, when a highway project is adjacent to an airport and has proposed fencing, the designer shall contact the Aircraft Operations Section, which will check with the Federal Aviation Administration to ascertain if metallic fencing will be a problem. Should the FAA determine that the metallic fencing will be a problem, then a nonmetallic design will be used.

Unless circumstances dictate otherwise, plus and distance references for fence breaks will only be required on plans where the fence deviates from the proposed right of way line.

Deleted Information *

* Rev. 7/13

RETAINING WALLS

Retaining walls are to be shown where specified on the approved preliminary plans and the following details are to be included:

1. Horizontal controls are to be shown on the plans to indicate the location of the proposed retaining wall.
2. A profile is to be shown denoting the top and bottom elevations of the proposed retaining wall. See Figure 2E-8 for details.
3. Proposed retaining walls are to be depicted on the roadway typical sections with annotation denoting the type and station limits of the wall.
4. Retaining walls will be drawn in detail on the Cross Sections Sheets. Retaining Wall Excavation will be shown on the cross sections.
5. Beginning and end stations of the retaining wall will be designated on the plans, profiles and cross sections.
6. A Boring Log Data Sheet for the retaining wall will be required in the final plan assembly.

Handrail or fencing along the top of walls is to be thoroughly discussed at field inspection for safety considerations.

Where right of way damages may justify the use of retaining walls, the walls are to be shown on prints and presented at the field inspection along with an estimated construction cost. For comparison purposes, a projected right of way line (without the retaining wall) is to also be shown on field inspection prints.

Form *LD-155* shall be completed to investigate the feasibility of alternate retaining wall designs, such as cantilever, reinforced earth, etc., and are to be considered and discussed with the Structure and Bridge Engineer for Geotechnical Design of Structures for possible use in lieu of standard designs (especially if wall height exceeds 10 feet).

Foundation data shall be requested from the Materials Division (Form *LD-252*) for all proposed retaining walls. The foundation recommendations that will be provided by the Materials Engineer are to be included in the details shown on the plans and cross sections.

Replacement of decorative or other walls, differing from standard walls, is to be thoroughly discussed at field inspection and, if a special design is necessary, a request is to be forwarded to the Geotechnical Section of the Central Office Structure and Bridge Division for design.

For those roadway and/or bridge plans that require retaining walls that are under the bridge and within 100 ft. as shown in Part 2 of the Manual of the Structure and Bridge Division, Chapter 18.03, Note 23, the retaining wall shall be included in the bridge plan set.*

*Added 1/21

RETAINING WALL EXCAVATION

POLICY

- Retaining Wall Excavation shall consist of the removal of material necessary to accommodate the structure shown on the plans in accordance with Section 401 of the *Road and Bridge Specifications*.
- Retaining Wall Excavation will be paid for in Cubic Yards based on plan quantities.
- Retaining Wall Excavation is applicable for all types of Retaining Walls.

DEFINITIONS

- Neat Line – a line defining the proposed or specified limits of a structure.
- Weep hole – a hole designed to drain off accumulated water from behind a structure.

METHOD OF MEASUREMENT

- Theoretical volume (in cubic yards) of material removed from within the limits of vertical planes up to 18" outside the neat lines of the footings, measured from the surface of the original ground or proposed roadway to the bottom of the foundation shown on the plans.
- See Section 401.04 of the *Road and Bridge Specifications* for further details.

Delete Information*

* Rev. 7/10

EXAMPLES

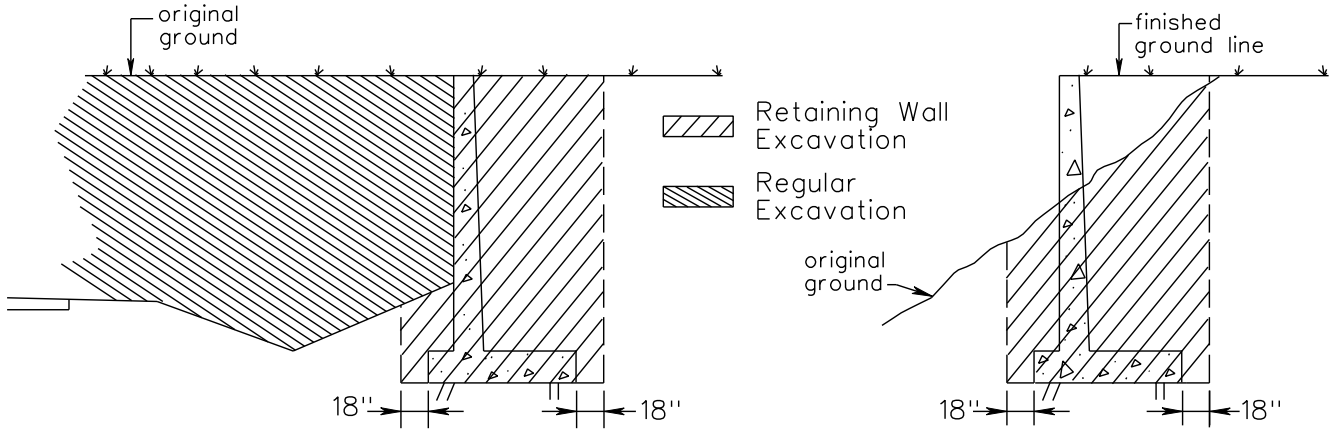

FIGURE 2E-8 RETAINING WALL EXCAVATION*

SUMMARY

- Retaining Walls are summarized on the Incidental Summary; therefore, Retaining Wall Excavation should also be summarized on the Incidental Summary, and paid for as Cu. Yds. of Retaining Wall Excavation.
- Retaining Wall Excavation should denote the symbol (X) for payment on basis of plan quantity. For additional information on plan quantity see *Chapter 2G*.

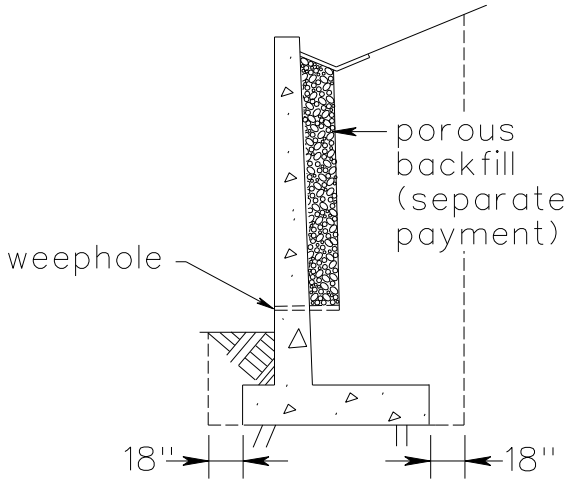

FIGURE 2E-9 POROUS BACKFILL (SEPARATE PAYMENT)*

Porous backfill is included in the price bid for Retaining Wall Excavation if only required within an 18" cube for drainage behind the weep hole as required in Section 401 of the *Road and Bridge Specifications*.

* Added 10/20

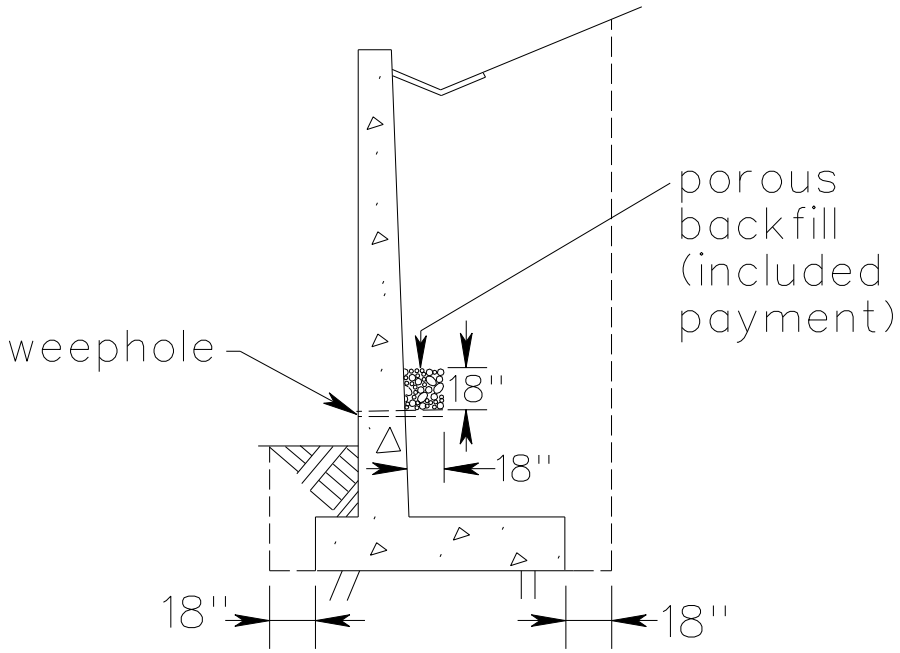

FIGURE 2E-10 POROUS BACKFILL INCLUDED PAYMENT*

SPECIAL PROVISION

- A Specification is available for applicable projects as follows: *http://www.virginiadot.org/business/const/spec-default.asp*

* Added 10/20

RETAINING STRUCTURES*

REINFORCED SOIL SLOPE (RSS) STANDARD

RSS may be used as an alternative to purchasing additional right of way or the construction of a retaining wall. In general, RSS may be less expensive when a wall or additional right of way would otherwise be necessary.

This standard design is applicable when slopes are designed to be steeper than 2.0H: 1.0V but no steeper than 0.5H: 1.0V, and when the foundation conditions and backfill meets the criteria in the standard. Aesthetics and maintenance should be considered as part of the decision.

The design engineer may use the RSS standard design when the following conditions are met and approved by the District Materials Engineer:

- New or widening of embankments where sufficient working room may be made available to place the backfill. Review of required reinforcement length as it relates to excavation requirements and potential shoring shall be evaluated.
- Limited right of way where a retaining wall would be considered as a way to avoid encroachment.
- The foundation conditions satisfy Case 1 or Case 2 as described in the standard.
- The fill meets the standard or Type I/II Select Material as specified.

Aesthetics and long-term slope maintenance have been thoroughly considered.

The engineer shall obtain approval from the District Materials Engineer using Form *LD-252.*

The engineer shall specify on the roadway drawings the following:

1) In plan view, the top of slope and toe of slope.

2) Slope:
   - 1/2H:1V
   - 1H:1V
   - 1½H:1V

3) Backfill Type:
   - A (Select Material)
   - B (On-site or Imported Soils)

* Added 1/17

4) Case:
   - 1 (Soft soil and maximum groundwater level at depths equal to or greater than slope height)
   - 2 (Soft soil at depths equal to or greater than reinforcement length and maximum groundwater level at toe of slope)*

EXAMPLE OF TABLE TO BE USED

Station	Slope	Backfill Type	Case	Max Height	Square Footage
XX+XX to YY+YY	1/2H:1V, 1H:1V or 1 1/2H:1V	A or B	1 or 2	Feet	Area ft2
YY+YY to ZZ+ZZ	1/2H:1V, 1H:1V or 1 1 1/2H:1V	Must be same as above	Must be same as above	Feet	Area ft2

Chapter III of the *Materials Division Manual of Instructions* (MOI) defines the requirements for geotechnical exploration and the determination of strength in designing slopes.

Slopes transitioning from a steeper slope to a flatter slope or a greater height to a lower height will use the reinforcement required in the steeper slope or higher slope.

The engineer will typically adopt the same landscaping requirements for the rest of the project, unless specific needs have been identified and called for on the roadway plans.

The maximum height for the RSS shall be 35 feet for Type A and 20 feet for Type B.

To reduce the likelihood of an error, the same backfill type and foundation case shall be specified throughout the entire slope, unless there are compelling reasons to differentiate between the two.

If the embankment and RSS are to be simultaneously constructed, consideration may be given to eliminating the internal RSS drainage (geocomposite and outlet drains).

Specially designed RSS may still be used when the standard conditions are not met. These must be evaluated on site specific conditions and approved by the District Materials Engineer.

The engineer shall determine the total square footage of the RSS based on vertical projection of the slope face (top of slope to toe of slope) for the specified slope ratio and payment will be made based on that area.

* Added 1/17

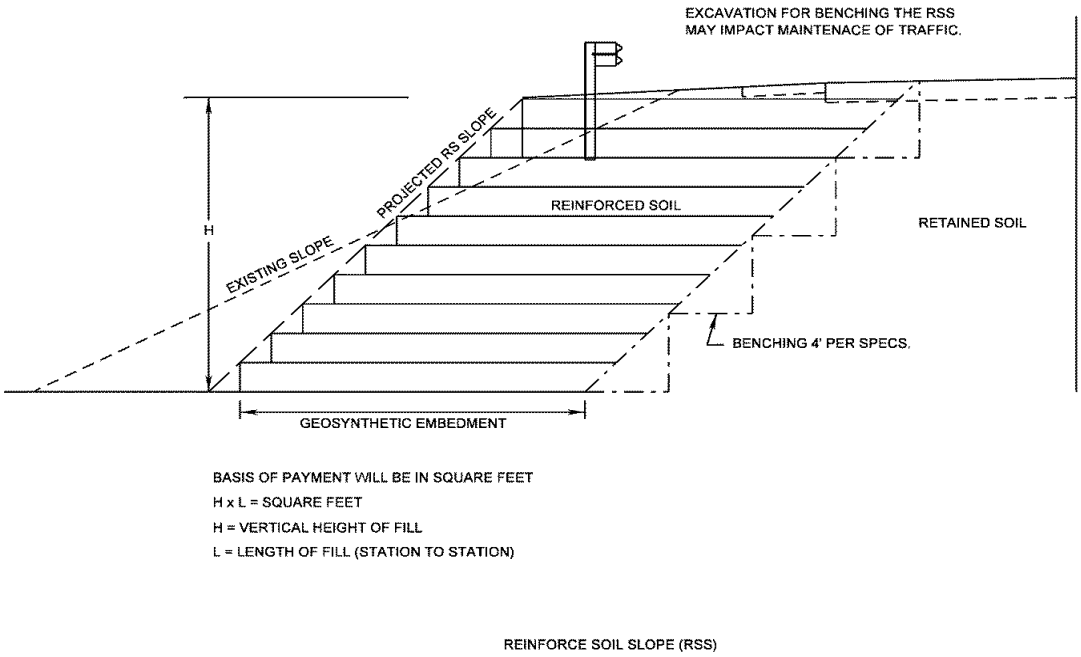

FIGURE 2E-11 SAMPLE REINFORCED SOIL SLOPE DESIGN*

The standard is based on a 75-year design life.

The following references apply:

- Reinforced Soil Slope standard design (Drawings available under 2016 Insertable sheets in ProjectWise and the FTP)
- Special Provision for Reinforced Soil Slopes (RSS)
- VDOT Materials Division Manual of Instructions (MOI)
- Federal Highway Administration Publication (FHWA)-NHI-10-024/025

Pay Items:

00360	NS REINFORCED SOIL SLOPE TY. A	SF	2016	ATTD
00367	NS REINFORCED SOIL SLOPE TY. B	SF	2016	ATTD

* Added 10/20

SOUND BARRIER WALL DESIGN PROCEDURES

The necessity for sound barrier walls is determined by the Environmental Division. If the wall is deemed necessary, the Environmental Division will contact the Road Designer concerning requirements for the sound barrier wall design. Environmental Division will determine the location and profile elevation of the sound barrier wall and the Road Designer will include the information in the plan assembly.

The contractor is responsible for the design and construction of the sound barrier wall based on Section 519 of the VDOT *Road and Bridge Specifications* and applicable industry guidelines (such as AASHTO *Guide Specifications for Structural Design of Sound Barriers*).

If Special Provisions are required for the sound barrier wall they will be prepared by the Central Office Construction Division.

All sound barrier wall designs shall be submitted to the Central Office Location and Design Standards and Special Design (Engineering Services) Section.

If a sound barrier wall is located within the clear zone, sound barrier wall shall be shielded (protected) by concrete barrier. For RDM Clear Zone (Lateral Offset) Cases, See *Appendix A2, Table A2-1.*

URBAN LOW SPEED (with Curb/Curb and Gutter)

Sound barrier walls adjacent to a curb and/or curb and gutter sections in Urban Low Speed (design speed equal to or less than 45mph) **shall** be shielded (protected) with (MB-7F) or with guardrail in accordance with Figure 2E-12 shown below.

The detail depicted in Figure 2E-12 is not for use with Interstate, Freeways, Interchanges, or Ramps.

HIGH SPEED ROADWAYS (with Curb/Curb and Gutter)

High speed roadways with design speeds of 50 mph and greater with curb/curb and gutter designs, the sound barrier wall shall be offset with a shoulder and shielded by median barrier (MB-7D) as shown in Figure 2E-13.*

ROADWAYS WITH SHOULDERS

All roadways with shoulder sections regardless of design speed shall be shielded by median Barrier MB-7D as shown in Figure 2E-13.

Guardrail shall not be used in high speed situations when shielding of the soundwall is required.

.

* Rev 10/20

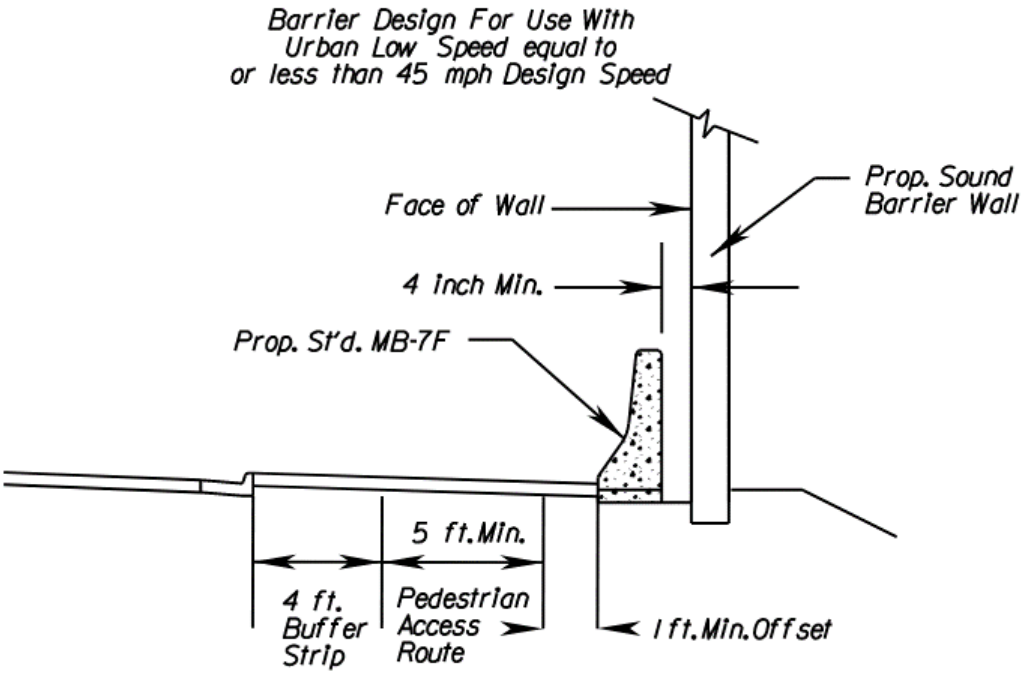

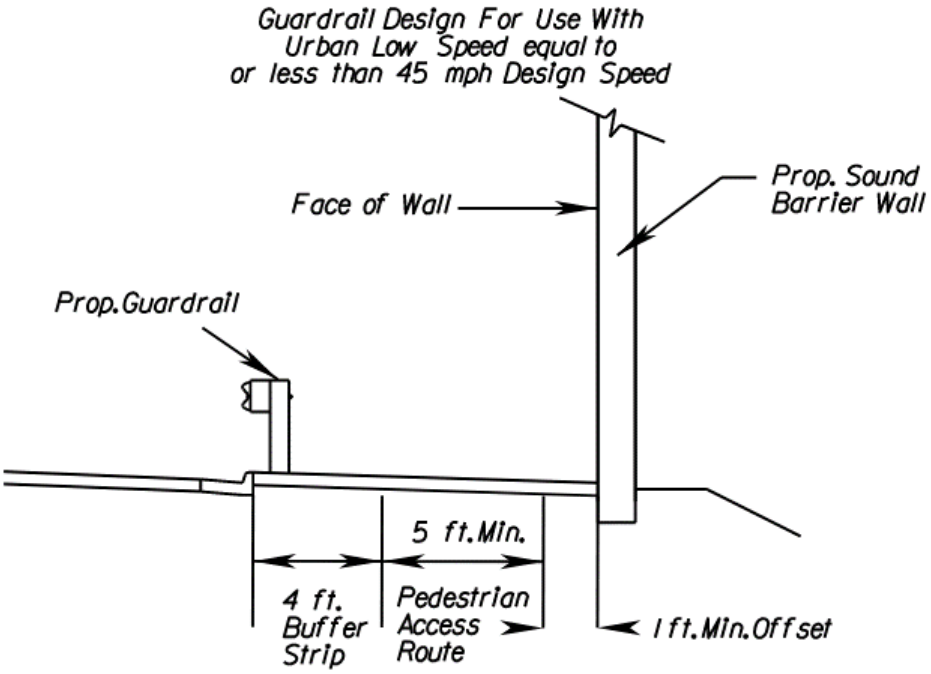

FIGURE 2E-12 URBAN LOW SPEED (≤45 MPH) CURB / CURB AND GUTTER SECTION DETAIL*

* Rev 10/20

SPECIAL DESIGN GRAVEL DAM

A concrete gravel dam shall be placed at the beginning and the end of the median barrier so that the No. 78 aggregate material is contained. The cost of the gravel dam shall be included in the cost of other items.

SOUND BARRIER WALL

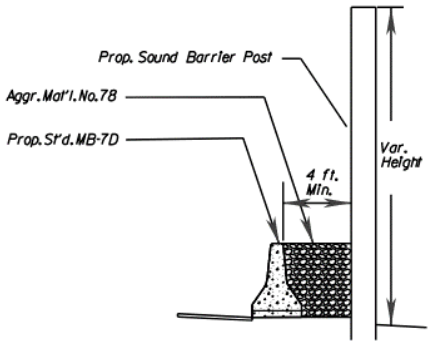

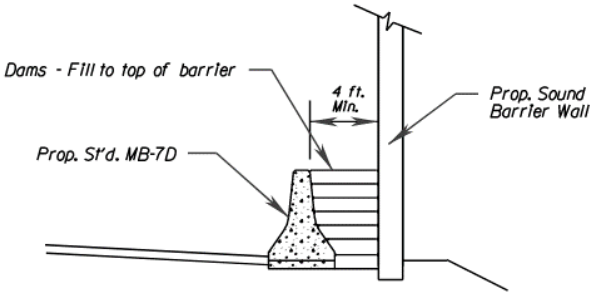

SECTION A-A

MB-7D Concrete Barrier Placement in front of Sound Barrier Wall.

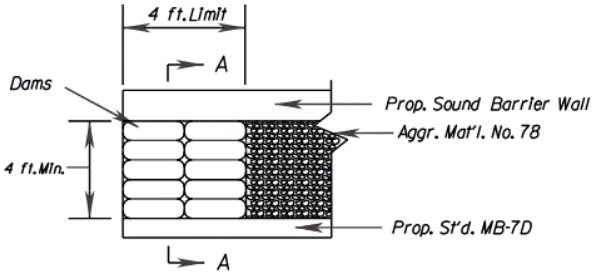

PLAN VIEW

FIGURE 2E-13 SHOULDER SECTION DETAILS*

* Rev 10/20

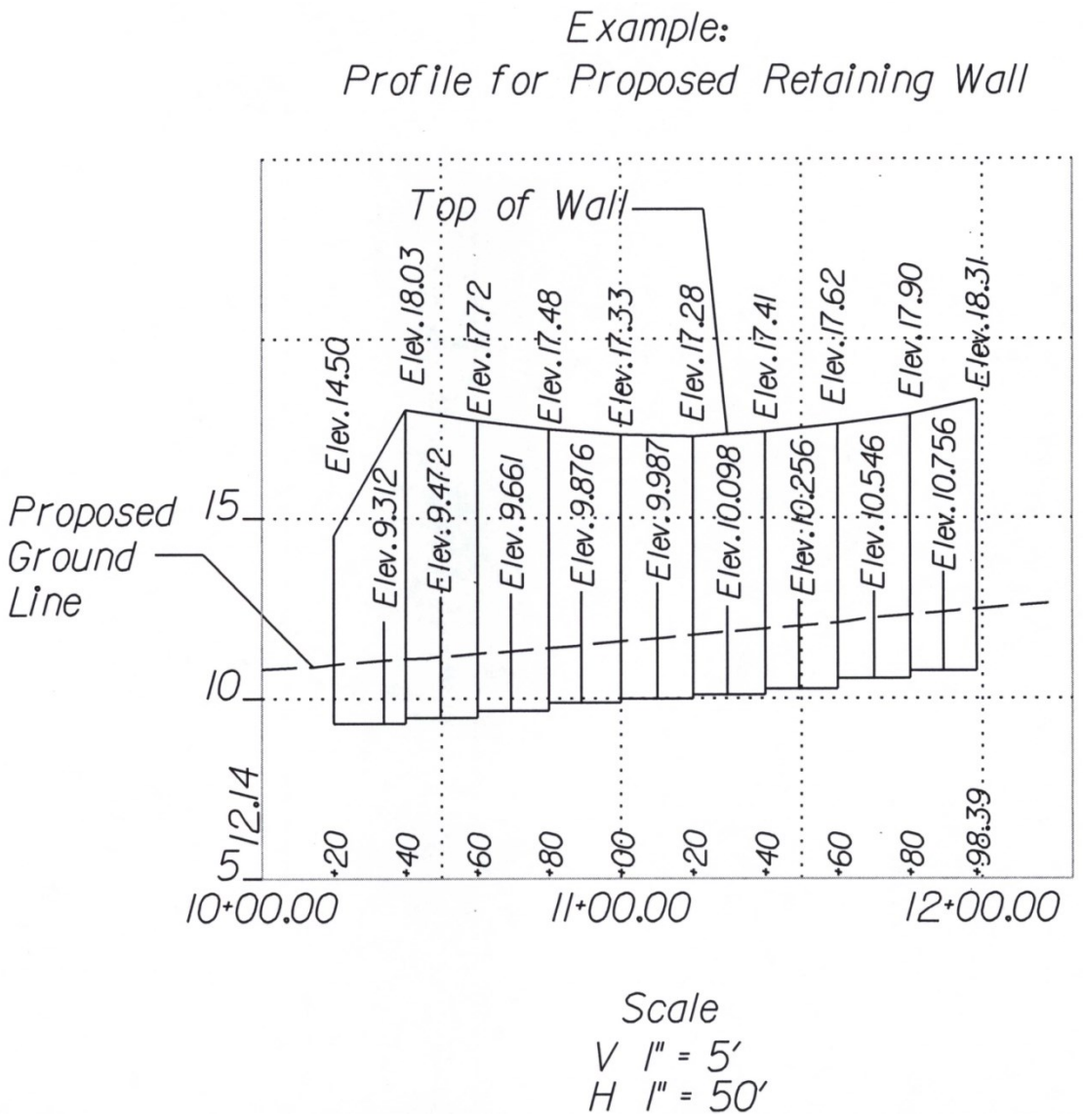

FIGURE 2E-14 PROFILE FOR PROPOSED RETAINING WALL*

STEPS AND HANDRAILS

Steps and handrails are to be provided where necessary, in accordance with St'd. S-1 or S-2 of VDOT's *Road and Bridge Standards*. If decorative, wooden, etc., steps are desired for replacement, the design is to be reviewed by the *Standards and Special Design Section*.

* Rev 10/20

SIDEWALK

Sidewalk is to be provided as specified in the Scoping Report, for replacement in kind, or as shown on the approved preliminary plans.

Proposed sidewalk is depicted with solid lines. For CADD plans, however, proper labeling and line weights will depict. Please review *IIM-LD-55*.

SIGN ISLANDS

Standard Sign Islands are not to be shown on plans prior to field inspection. For details on the design of Sign Islands see AASHTO, "Green Book", Chapter 9, Section 9.6.3. They will be shown on completed plans only where recommended by the responsible District Traffic Engineer and in accordance with the standard. Sign islands for Secondary projects are to be shown only where recommended by the District Construction Engineer.

RAILWAYS: ADJACENT HIGHWAY DESIGN CONSIDERATIONS

Design of Roadways in the Vicinity of Railways

The design of roadways in the vicinity of railways deserves special attention. Avoid designs where traffic signals, road intersections, road grades, and etc. could trap vehicles on the tracks. Design alternatives must be considered which avoid a highway-rail crossing relatively close to an adjacent highway, running parallel to the railway track. Inadequate stacking or storage of stopped vehicles, at an adjacent road intersection, may trap vehicles on the tracks. This topic should be discussed with the Traffic Engineer, who should communicate and coordinate with the railway authority for an acceptable design. They may consider an electrical circuit between the grade crossing warning system and the highway traffic signals which allows the normal sequence of highway signals to be preempted to avoid trapping vehicles on the tracks. The Federal Highway Administration Manual on Uniform Traffic Control Devices (MUTCD) addresses the topic of traffic signals at or near grade crossings. Also, avoid highway-rail crossing at which there is an abrupt change in the level of the road's surface as it crosses the tracks.

Highway Construction Adjacent To Railway Tracks

Design details are to be included in the project plans when construction adjacent to a railway track requires temporary sheeting or a bulkhead to protect the tracks. Please see Chapter 8.3.8 Drainage Design at Railroads* in the VDOT *Drainage Manual* for the minimum railway roadway section that must be retained (not undercut) for construction adjacent to the track and also denotes the limits where sheeting is required when excavation is involved. Actual requirements may vary slightly and the railway will determine specific submittal requirements.

The applicable typical section, plan, profile and cross section sheets and foundation information (i.e. borings, roadway soundings or consolidation information) for structures such as standard retaining walls, box culverts, etc., are to be furnished to the designer of

* Rev. 10/20

the temporary sheeting or bulkheads. The final design details for these structures will be included in the road plans. Bridge or other structure plans, under the supervision of the Structure and Bridge Division, will include the temporary sheeting or bulkhead design, when necessary, along with their other design details.

When required, three (3) copies of the detail drawing along with calculations covering the proposed design are to be furnished to the Department of Rail and Public Transportation for their use in obtaining Railway Company approval.

Criteria for Temporary Sheeting and Bulkheads to Protect Railway Track During Adjacent Highway Construction

1. The live load surcharge from track adjacent to sheeting and bulkheads shall be taken into account in the sheeting and bulkhead design. The recommended live load for each track is the Cooper E 80 load.

2. Allowable stresses contained in the American Railway Engineering Association "*Manual for Railway Engineering*"* (Chapters 7, 8 and 15) shall be used.

3. A construction procedure for temporary sheeting or bulkhead construction shall be included on the drawing. Show step by step sequence.

4. Safety railings shall be installed when temporary sheeting or bulkheads are within 15 feet of track.

5. A safety factor of 2 shall be used in the temporary sheeting or bulkhead design.

*Available from the Department of Rail and Public Transportation.

Drawings and Calculations Needed For Approval

1. Three (3) copies of detailed drawings showing the following:

   a. Timber, steel, bolt and weld sizes and details.

   b. Dimensions showing distances from centerline track to temporary sheeting or bulkheads and between supporting elements.

   c. Section showing temporary sheeting or bulkhead heights and track elevation.

d. Note: Contractor to provide handrail protection H=3 feet minimum for excavation adjacent to track or leave sheeting 3 feet minimum above ground line adjacent to excavation.

e. Drawings must be to scale.

2. Calculations covering temporary sheeting or bulkhead design.

Clear Zone Requirements

A minimum of 22 feet of clear zone is required adjacent to railway tracks.

BICYCLE FACILITIES

Bicycle Facilities are to be provided as specified, for replacement in kind, or as shown on the approved preliminary plans. Proposed Bicycle Facilities and crossing of bicycle facilities are to be depicted with light, solid lines and proper labeling. *See Appendix A(1) *, Section 1 – BICYCLE AND PEDESTRIAN FACILITY GUIDELINES.*

GREENWAYS

All official Greenways (as defined in Chapter 1B, Section 1B.2) that cross the proposed highway right-of-way are to be depicted with light and solid lines.

UNDERDRAINS

Underdrains are installed for a number of purposes, most of which may be included in the following classifications:

1. Control of seepage in cuts or side hill location.
2. Lowering of ground-water table.
3. Base, subbase and subgrade drainage.

(See Chapter 9 of VDOT *Drainage Manual* for more information on underdrains).

Underdrains (UD's only) are to be shown on all typical sections.

St'd. UD-1 Underdrains are to be shown on the plans at locations prescribed in the soil investigation report from the Materials Division. The underdrains are to be depicted similar to pipe culverts and located generally parallel to the roadway as shown in VDOT's *Road and Bridge Standards.*

* Rev. 7/18

St'd. UD-2 underdrains are to be located under raised grass medians at locations discussed at field inspection and recommended by the Materials Division.

St'd. UD-2 underdrains are to be depicted on the plans as described for St'd. UD-1 underdrains. Care must be taken to insure proper treatment of drainage at the outlet end of the system.

St'd. UD-3 Sidewalk Underdrains are to be provided as determined at the project Field Inspection.

St'd. UD-4 or UD-5 pavement edge drains will be provided, where recommended, to provide drainage for pavement subbase, in addition to St'd. UD-1's as recommended at F.I.

St'd. CD-1 underdrains are to be located where the proposed grade passes from a cut to a fill condition. They are to be placed only in cuts of appreciable length and in downgrade situations as shown in VDOT's *Road and Bridge Standards*. They are to be depicted as described for St'd. UD-1 underdrains.

St'd. CD-2 underdrains are to be placed in sag fill situations and at bridge approach slabs as indicated in VDOT's *Road and Bridge Standards*. They are to be depicted as described for Standard UD-1 underdrains.

Underdrains are to be provided in ramp gore areas to collect subsurface water on down grade situations as described in the VDOT *Drainage Manual*, Chapter 9 (Section 9.4.3.9)

St'd. EW-12 is to be used at the outlet ends of all St'd. CD's and UD's which do not tie to other drainage structures.

DEMOLITION OF EXISTING PAVEMENT AND OBSCURING ROADWAY

"Demolition of Pavement" is defined as removal of existing pavement structures.

The designer will gather the existing pavement data needed for demolition of pavement. This information will be shown on the summaries or typical sections and denoted on each existing roadway using the symbol for demolition of pavement (hatching). The existing pavement data will consist of the following information:

- Type of existing pavement structures for all areas to be demolished (i.e. cement stabilized, hydraulic cement concrete, asphalt concrete pavement and shoulder structure courses or combinations thereof).

- Limits, width, including 1 foot extension of pavement structures, if applicable, and depth (depth of pavement structures to include cement stabilized subgrade if present).*

* Rev. 7/14

If existing pavement data is unknown and cannot be determined from the "as built" plans, the designer should contact the materials Division and request that the data be included as part of the normal soils report.*

The following note is to be placed on plan sheets containing demolition of pavement:

Hatched areas denote areas of demolition of pavement.

"Obscuring Roadway" is defined as restoring areas, which are no longer needed for highway use.

In order to allow for obscuring shoulders, ditches and slopes, the quantity for Obscuring Roadway is to be estimated at twice the area of pavement located outside the limits of construction. The areas covered under "Obscuring Roadway" are not to be designated by hatching.

The following definitions should be used when establishing pay items for Demolition of Pavement (a special Provision Copied Note is available from the Construction division).

- Demolition of hydraulic cement concrete pavement will be measured and paid for as Demolition of Pavement (Rigid) S.Y.
- Demolition of asphalt concrete pavement will be measured and paid for as Demolition of Pavement (Flexible) S.Y.
- Demolition of a combination of hydraulic cement concrete pavement and asphalt concrete pavement will be measured and paid for as Demolition of Pavement S.Y.
- Obscuring Roadway will be measured and paid for as Obscuring Roadway in Unit *

* One unit is equal to 1000 ft^2.

The following criteria are to be used in establishing the pay items for Demolition of Pavement and Obscuring Roadway.

* Rev. 7/14

INSIDE OF NEW CONSTRUCTION LIMITS		
TYPE OF PAVEMENT STRUCTURE	DEMOLITION OF PAVEMENT (S.Y.)	OBSCURING ROADWAY (UNITS)
CEMENT STABILIZED HYDRAULIC CEMENT AND ASPHALT CONCRETE PAVEMENT AND SHOULDER STRUCTURE COURSES OR COMBINATIONS THEREOF	PAY ITEM	NO PAY ITEM
CEMENT STABILIZED, HYDRAULIC CEMENT AND ASPHALT CONCRETE PAVEMENT AND SHOULDER STRUCTURE COURSES LOCATED BEYOND EXISTING PAVEMENT STRUCTURE	PAY ITEM	NO PAY ITEM
SURFACE TREATED AND UNTREATED PAVEMENT AND SHOULDERS	NO PAY ITEM *	NO PAY ITEM

OUTSIDE OF NEW CONSTRUCTION LIMITS		
TYPE OF PAVEMENT STRUCTURE	DEMOLITION OF PAVEMENT (S.Y.)	OBSCURING ROADWAY (UNITS)
CEMENT STABILIZED, HYDRAULIC CEMENT AND ASPHALT CONCRETE PAVEMENT AND SHOULDER STRUCTURE COURSES OR COMBINATIONS THEREOF	PAY ITEM	PAY ITEM
SURFACE TREATED AND UNTREATED PAVEMENT AND SHOULDERS	NO PAY ITEM *	PAY ITEM

The demolition of cement stabilized, hydraulic cement and asphalt concrete pavement and shoulder structure courses located beyond the existing pavement structure will also be measured for payment.

Removal of all pavement and shoulder structures other than cement stabilized, hydraulic cement concrete and asphalt concrete pavement structure courses will be measured as regular excavation in accordance with Section 303 of the Specifications or as lump sum grading on Minimum Plan and No Plan projects.*

EXAMPLES*

* Rev.7 /14

Cement Stabilized/Hydraulic Cement and Asphalt Concrete Pavement

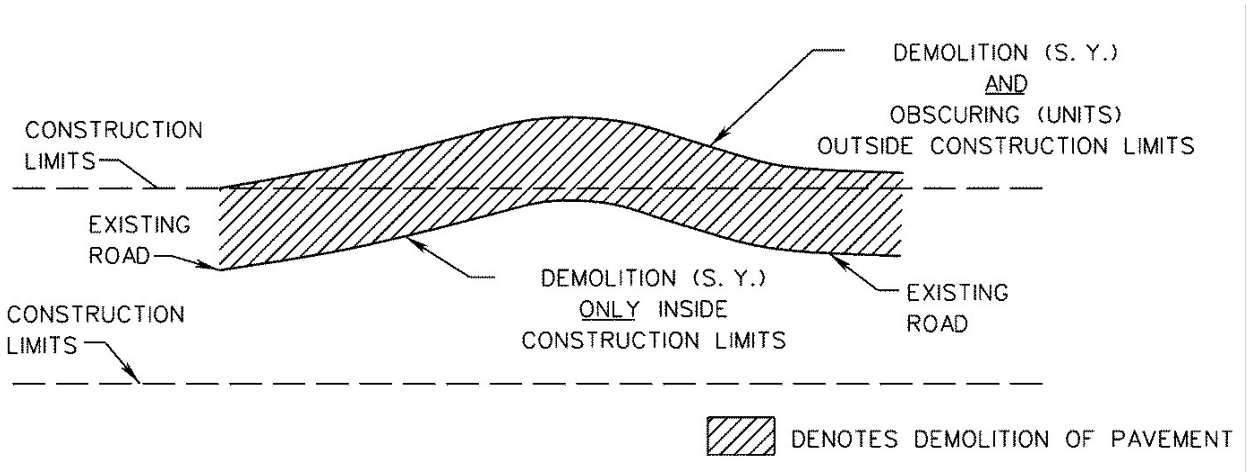

FIGURE 2E-15 DEMOLITION OF PAVEMENT*

Surface Treated/Untreated Pavement

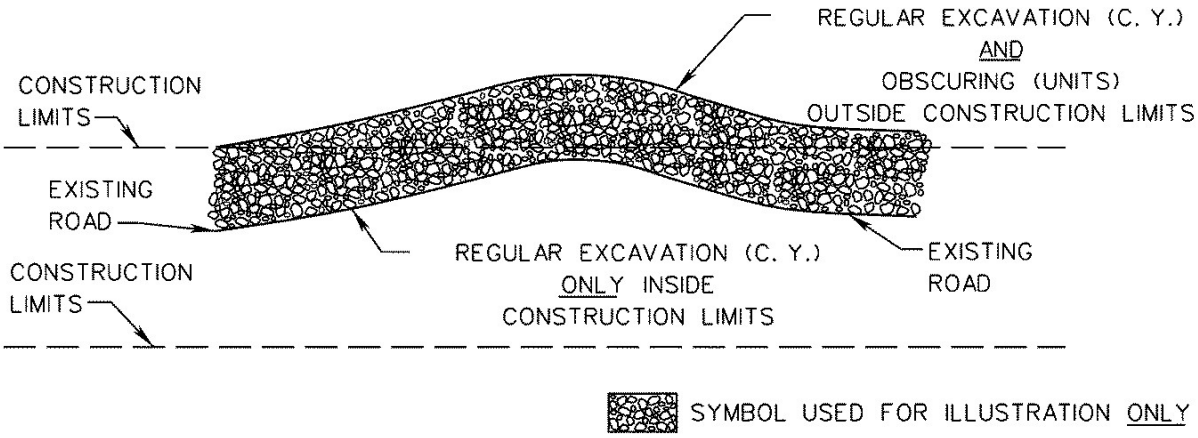

FIGURE 2E-16 DEMOLITION OF UNTREATED PAVEMENT*

GRADING SUMMARY

Earthwork quantities are to be adjusted in the grading summary to reflect the removal of the volume of cement stabilized, hydraulic cement concrete or asphalt concrete pavement and shoulder structure courses (based on the width of the widest course) where applicable. If the depth of existing pavement is unknown and cannot be obtained, use 1 foot to figure this quantity. If the width of the cement stabilized subbase is unknown, add an additional 1 foot to each side of the existing pavement.

* Added 10/20

TREE WALLS AND TREE WELLS

The designer is required to review the proposed location and design of all tree walls and tree wells with the Environmental Division prior to inclusion in the plan assembly.

LABELING INCIDENTAL ITEMS

All incidental items, if not denoted individually, may be denoted by numbers within equilateral triangles having 3/8 inch sides with a description of the particular item shown in a conspicuous location on each plan sheet. Labeling should be consistent between plan sheets and typical sections.

PEDESTRIAN RAMPS

See Instructional and Informational Memoranda *IIM-LD-55*.

CURB AND CURB AND GUTTER

Barrier Type Curb

Standard CG-2 curb or Standard CG-6 curb and gutter has a 6" vertical face and is referred to as "barrier curb". The use of barrier curb is limited to design speeds of 45 mph or less.

Mountable Type Curb

Standard CG-3 curb or Standard CG-7 curb and gutter has a 4" sloping face and is applicable to all design speeds (required for design speeds of 50 mph or greater). (See AASHTO Green Book, Chapter 4, Section 4.7.1)

For curbed entrances, the same standard entrance gutter, street connection, median strip, etc. is used for Standard CG-2 / CG-6 or Standard CG-3 / CG-7.

For highways with design speeds of 50 mph or greater, curb and/or curb and gutter should be utilized in special situations ONLY. These situations may include, but are not limited to, drainage considerations, access control and right of way restrictions.

Where a bicycle accommodation is next to curb or curb and gutter, mountable curb (CG-3) or curb and gutter (CG-7) shall be used for designs speeds 45 mph and below. See General Note on GS Standards.*

* Rev. 1/20

GRADING CONTOURS

The need to provide proposed grading contours at interchange locations should be discussed at field inspection. Particular attention should be given to contouring gore areas and areas where drainage structures will be constructed to insure that the final design can be safely traversed by a vehicle within the established clear zone for a particular project. Gore areas at entrance ramps in cut situations should also be discussed to assure that adequate horizontal sight distance will be provided. Unless otherwise directed, as a result of field inspection or written recommendations, proposed grading contours are to be included in the plan assembly using 2 foot intervals. The proposed contours are to cover either all or portions of the interchange area where the design can more clearly be defined in order that the plans clearly reflect the limits of fill or cut construction. This will also be of benefit in the placement of guardrail, in the interest of safety and general final appearance of the proposed design.

CONSTRUCTION OF CATTLE PASSES

Cattle passes will not be built on two-lane highways with right of way of 110 feet or less; however, existing structures may be widened. If the property owner desires a cattle pass and pays the difference between such a structure and the structure that is required for drainage, then a cattle pass may be constructed.

Where the right of way width is over 110 feet and the plans for the present or future construction provide for a four-lane divided highway, cattle passes may be constructed under certain conditions. If the land on each side of the highway is under the same ownership, at least forty (40) head of horses or cattle are to be passed from one side of the right of way to the other daily, and its construction is recommended by the Right of Way Engineer and approved as to location by the Transportation Engineer, a cattle pass may be constructed upon approval by the Chief Engineer.

Previous studies and investigations have determined that a St'd. 5’ x 7’ Box Culvert or an equivalent metal pipe is to be provided for access when the need has been established and so documented. In the location and design of the structure, especially on a four lane divided facility where the barrel length would be long, special attention is required to provide day-lighting when the barrel length approaches or exceeds 200 feet. Sufficient light must be available or the structure will not serve its intended purpose. Erosion control, if required, should have a smooth surface. Sufficient light and a smooth surface are both necessary for horses and cattle to enter a structure. The plan description shall indicate the purpose of the structure. Example: St'd. 5’ x7’ Box Culvert Req'd. for Cattle Pass.

HISTORICAL MARKER RELOCATION

When a project requires the relocation of a historical marker, and the normal typical section does not provide for stopping at the marker (curb and gutter, no shoulder, etc.), a pull-off area is to be provided.

Relocation of the marker shall be coordinated with the District Environmental Division (Cultural Resources staff) and responsible District Traffic staff for review and coordination with the Department of Historic Resources (DHR).

The pull-off area is to be in accordance with the detail shown below.

The pavement design should be the same as the adjacent roadway. Applicable details (Insertable Sheet - *Historical Sign Marker Foundation*) for the post foundation should be included in the roadway plan assembly.

Relocation of the historical marker will be covered by Section 105.15 and 510.01of the *Road and Bridge Specifications.* Measurement and Payment for removal, storage and reinstallation of historical markers per these Sections shall be determined by the designer as deemed appropriate for the specific requirements of the project.

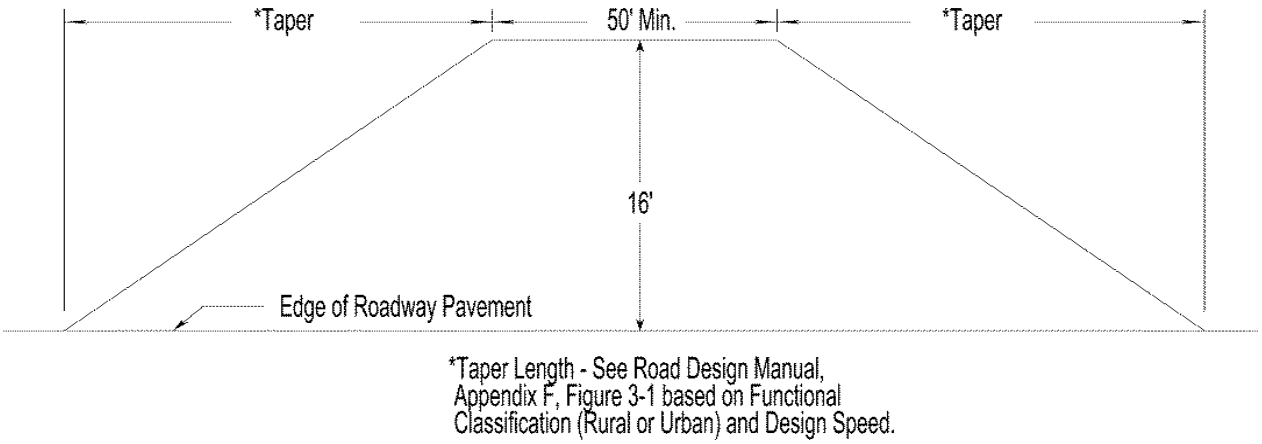

***FIGURE 2E-17 HISTORICAL MARKER PULL OFF AREA**

* Added 10/20

SECTION 2E.4 SHOWING BRIDGE LIMITS ON PLANS

DETERMINING APPROXIMATE LENGTH OF BRIDGE

The approximate length of a proposed bridge is determined by projecting the spill slope upward using a 1.5 to 1 slope* from existing stream banks, proposed channel slopes, or existing or proposed roadway ditches to the finished grade line of the higher roadway.

These limits must be adjusted when bridge plans are completed.

DETERMINING APPROXIMATE WIDTH OF BRIDGE

The approximate width of proposed bridges is determined by applying the appropriate geometric design standard, with additional sidewalk spaces where applicable.

DEPICTING ON PLANS

Outer limits of bridges, including wingwalls, are to be plotted with heavy solid lines.
Beginning and ending of bridge projects are to be flagged.

* Rev. 1/07

SECTION 2E.5 PROPOSED RIGHT OF WAY AND LIMITED ACCESS

DETERMINING PROPOSED RIGHT OF WAY ENCOMPASSING SLOPE LIMITS

All existing right of way acquired in fee will be shown on plans as established by the survey information or other data. Prescriptive or statutory right of way is to be shown on the plans but is not to be shown or labeled* as existing fee right of way.

The width of proposed right of way shall be sufficient to accommodate the roadway cross-section elements and requisite appurtenances necessary for an adequate facility in the design year and for known future improvements.

Minimum right of way widths shall be set in accordance with the "CS" standards in VDOT's *Road and Bridge Standards*.

Right of way breaks are to be set at reasonable longitudinal distances so as not to obtain excessive right of way. Breaks are to be spaced at sufficient intervals so that the right of way line will not be unreasonably irregular and are to be located in accordance with the Criteria for Placement of Right of way Monuments covered in *Appendix C, Section 3-RIGHT OF WAY.*

There are instances when it is desirable to acquire an entire parcel. This occurs when only a portion of the parcel is required for the construction of the project, (e.g., - only small residue remains; dwelling, etc., taken by construction, and residue does not meet minimum requirements for reconstruction). These situations should be reviewed at the project preliminary field inspection and a decision regarding the property made at that time or during the right of way appraisal stage. When this occurs, the normal right of way line is to be established (clearly dimensioned) and labeled "Proposed Right of Way" and the residue property line(s) labeled "Proposed Acquisition Line" (See *Figure C3-1, Appendix C, Section 3-RIGHT OF WAY*). By labeling the residue in this manner, the surplus property has been established and will be included in the Right of Way Division's "Residue Parcels Inventory" for disposal purposes.

Proposed right of way is to be labeled on each side of the roadway at least once per plan sheet unless broken by a connection or relocation.

---

* Rev. 1/14

DETERMINING PROPOSED RIGHT OF WAY WITH SLOPE EASEMENTS

On most urban projects, and in some other instances, it is desirable to acquire right of way only for the proposed roadway, buffer strips, and sidewalk. The proposed right of way line, in this case, is usually based on the computed back of sidewalk line plus 1 foot or on a line parallel to the back of sidewalk.

DETERMINING SLOPE EASEMENTS

Permanent or temporary slope easements are acquired encompassing the area actually needed for slopes, plus a working area of approximately 5 feet. The need for maintaining the slopes following the completion of construction is to be determined at Preliminary Field Inspection. Should continued maintenance be deemed necessary, then a permanent easement will be recommended. Otherwise, a temporary easement to terminate at the end of construction will be recommended.

The slope easement line is established spacing breaks similar to the method indicated previously in this section for right of way lines and is shown in a dot-dot-dashed medium weight line for temporary easements or dot-dashed line for permanent easements.

The usage of the easement will also be indicated on the plans (e.g. Prop. Temp. Slope Easement, Prop. Perm. Drainage Easement, etc.).

Frequently, there are items located within the proposed construction easements, such as signs, light poles, steps, etc., which for some reason it is preferable to work around rather than remove. When it has been determined that certain items are not to be disturbed, this should be clearly noted on the plans so that the Right of Way Division will not purchase unnecessary items. These requirements are normally determined by the Right of Way Division.

Deleted Information*

* Rev. 1/13

DETERMINING PERMANENT EASEMENTS

Permanent easements are used where perpetual maintenance is required, such as slope easements as recommended by the District Engineer/Administrator or where fee right of way is impractical, such as behind retaining walls, sound walls or* for ditches or pipes extending beyond the project limits. In these instances, the permanent easement is to generally parallel the item in question, clearing the construction limits by approximately 5 feet or a sufficient width for the required maintenance necessary.

The permanent easement lines are tied to the proposed right of way line and at necessary points around the periphery of the item in question, allowing adequate space for construction activity.

The permanent easement lines are to be dot-dashed lines. A note is to be shown, in a conspicuous location on each applicable plan sheet, as follows:

The exact usage of the easement needs to be specified at each location, such as "Prop. Permanent Easement for Installation and Maintenance of Prop. Drainage Structure" or "Prop. Permanent Easement for Construction and Maintenance of Prop. Drain Ditch." If space is not available in the area of the easement, label the easement "Proposed Permanent Easement" with an asterisk (or similar notation) and show a note detailing the exact usage of the easement at another location on the sheet. Highway aerial easements are to be shown similar to the drainage easements and labeled "Proposed Aerial Easement for Bridge" and, if necessary, asterisks (or similar notations) are to be shown on all applicable easement breaks to distinguish the easement from other easements in the area.

In cases where permanent and temporary easement requirements overlap, the permanent easement takes precedence over the temporary easement; therefore, a temporary easement is to be tied into the permanent easement, not run through it. In some cases, a temporary construction easement will be necessary to generally run parallel to the permanent easement to provide adequate working and storage space. Where this is necessary, the temporary construction easement shall be shown, in its entirety, as the previously mentioned temporary slope easements and labeled "Prop. Temporary Slope Easement".

---

* Rev. 7/18

TEMPORARY CONSTRUCTION EASEMENTS

All TCE shall be labeled on the plans for their specific intended use such as: cut/fill slopes, drainage, detours).

Temporary Construction Easement (TCE) Requirements

In many instances the proposed replacement entrance construction will extend beyond the proposed roadway right of way and/or proposed temporary construction easement being acquired for roadway grading. As some extend only a small distance beyond those points different proposed rights are applicable.

a) Minor Construction

1. Urban and Suburban

Whenever the elevation change between the proposed roadway features (edge of pavement or back of sidewalk) and the existing entrance is minimal (less than 1 foot) **and** the entrance re-construction will tie-in by the end of the curb radius or within twenty five (25) feet of the edge of the pavement of the proposed roadway, the entrance construction is considered minor. In these cases it will not be necessary for the plans to denote a temporary construction easement for the work, as VDOT will construct the minor tie in as required by the statutory provisions, (see *Code of Virginia. 33.2-1001).* *

2. Rural

Whenever the elevation change between the proposed edge of pavement and the existing entrance is minimal (less than 2 feet) and the entrance re-construction will tie-in within fifty feet (50') of the edge of the pavement of the proposed roadway, the entrance construction is considered minor. In these cases it will not be necessary for the plans to denote a temporary construction easement for the work, as VDOT will construct the minor tie-in as required by the statutory provisions, (see *Code of Virginia. 33.2-1001).*

* Rev. 7/17

b) Substantial Construction Work

Whenever the proposed entrance replacement construction is not minor, as defined herein, the plans shall include Proposed Temporary Construction Easement (TCE) limits to facilitate the proposed work.

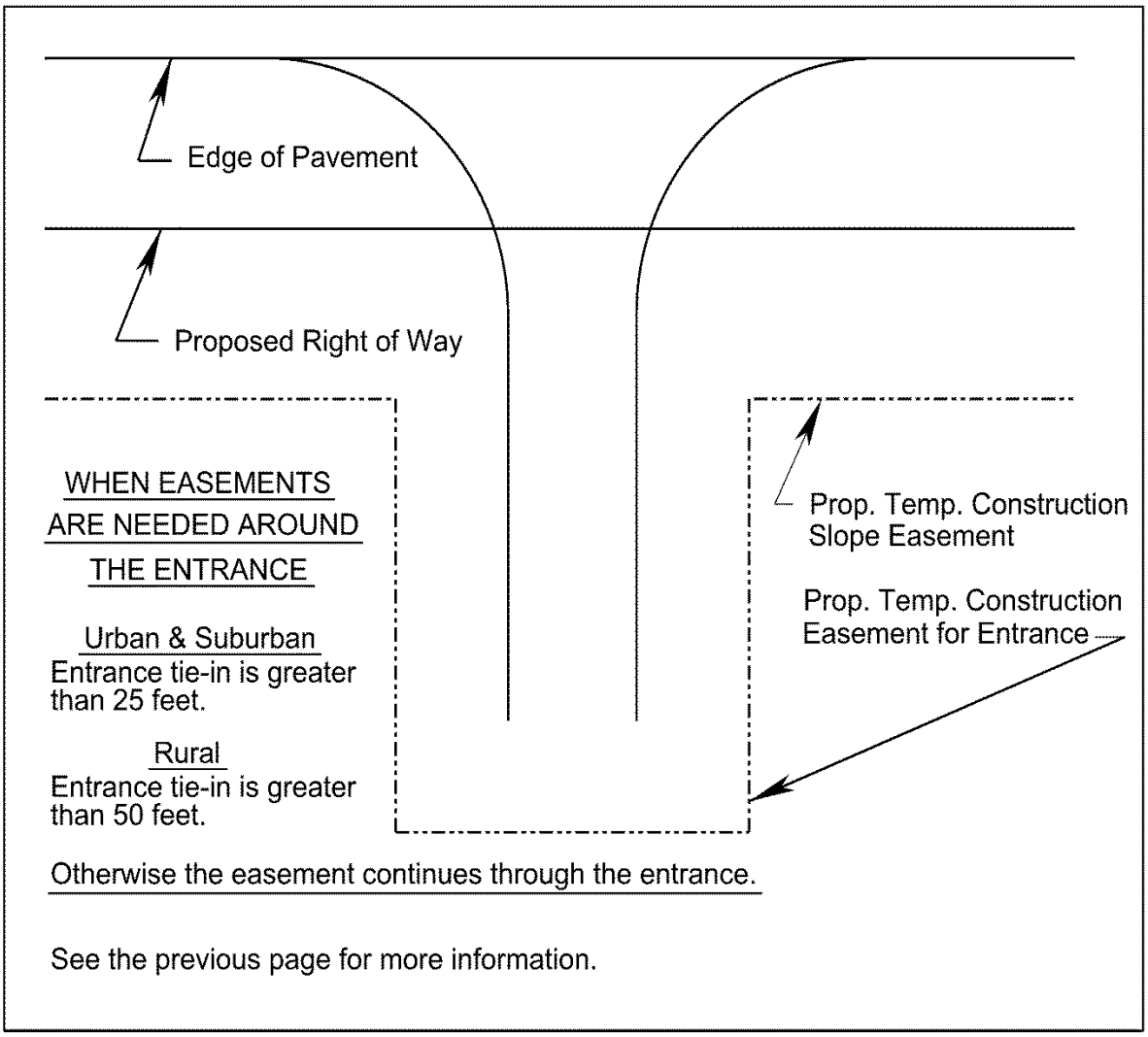

FIGURE 2E-18 DEPICTING TEMPORARY CONSTRUCTION EASEMENT AROUND ENTRANCES*

UTILITY EASEMENTS

In the past, utility easements have not been identified on public hearing plans. Following the public hearing and even as late as construction, concerns have been raised that citizens have not always been informed that utility easements may be added after the public hearing.

* Rev 10/20

Discuss the necessity of showing preliminary utility easements on project plans at the scoping stage and at preliminary field inspection. Strong consideration should be given to showing proposed preliminary easements on project plans in residential areas prior to the willingness and public hearing stage.

The field inspection recommendation regarding inclusion of preliminary utility easements should be reviewed with the appropriate Assistant State Location & Design Engineer or District Location and Design Engineer.

If the decision is made to add preliminary utility easements on the project plans, plans will be made available in ProjectWise* by the designer for the Regional Utility Coordinator along with a written request to develop preliminary utility easements for the public hearing stage. The date this information will be needed to meet the public hearing schedule will be included in the request.

If the decision is made not to add preliminary easements on the project plans, the appropriate plan note (See Note B on next page) is to be shown on prints for the willingness, public hearing and prints furnished outside the department.

When the preliminary utility easement information is received from the utility section, they are to be shown on prints for the willingness or public hearing and prints furnished outside of the department along with the appropriate plan note (See Note A on next page).

* Rev. 7/18

After the utility field inspection and before submission of approved right or way plans, detailed utility easement information will be provided and shown on original plan sheets.

Notes A or B shall be removed from plans after the public hearing stage prior to submitting plans for right of way.

The following note should be shown on the title sheet and all plan sheets when preliminary easements are shown on plans.

NOTE A

PRELIMINARY EASEMENTS FOR UTILITY RELOCATIONS ARE APPROXIMATE ONLY AND SUBJECT TO CHANGES AS PROJECT DESIGN IS FINALIZED

When the decision is made not to add preliminary easements the following note is to be shown.

NOTE B

ADDITIONAL EASEMENTS FOR UTILITY RELOCATIONS MAY BE REQUIRED BEYOND THE PROPOSED RIGHT OF WAY SHOWN ON THE PLANS

One of the above notes should be shown on all prints for the willingness or public hearing stage and prints furnished outside the Department.

On prints for public hearing or willingness and prints furnished outside the Department, shade in yellow with highlighting marker, the above notes for additional emphasis.

A discussion concerning possible additional or adjusted utility easements shall be included in:

Engineering presentation
Public Hearing handout/booklet

Deleted Information*

* Rev. 1/09

The following are examples of how this discussion may be worded:

(1) When preliminary easements are shown on project.

"As we further coordinate and finalize project development, preliminary utility easement locations shown on public hearing plans may change. The property owner will be informed of the exact location of the easements during the right of way acquisition process and prior to construction."

(2) When preliminary easements are not shown on project.

"As we further coordinate and finalize project development, additional easements for utility relocations may be required beyond the proposed right of way shown on the public hearing plans. The property owner will be informed of the exact location of the easements during the right of way acquisition process and prior to construction."

Detailed utility easements requirements are determined by the Regional Utility Coordinator after the Utility Field Inspection (Section 2E-13-UTILITY FIELD INSPECTION) has been conducted. **The Regional Utility Coordinator will furnish an electronic reference file to the designer showing the utility easements and labeling* which are to be shown on the plans.** The utility easement lines are to be shown on the plans in accordance with the VDOT's *CADD Manual*. If this information is received prior to approved right of way plans, it is included as a part of those plans. Otherwise, it must be added as a revision to the approved right of way plans.

Utility easements are separate from any other permanent or temporary easement and are not to be broken where they cross these other easements. They are to be stopped at any location where they intersect the proposed or existing right of way line.

Electronic reference file of utility easements furnished by the Regional Utility Coordinator shall contain adequate information to incorporate the utility easements into the plans. For easements that are not parallel, the electronic reference file shall contain sufficient information. All easements must mathematically close.

Once the right of way acquisition process has begun, requests for easement revisions must originate with or be coordinated with the District Right of Way office.

For utility easements, an appropriate note is to be shown on each plan sheet which contains an easement, using appropriate notes as furnished by the Right of Way Division and symbols as shown in the VDOT's *CADD Manual*.

* Rev. 1/14

LIMITED ACCESS ESTABLISHMENT AND CHANGE GUIDELINES

Background/Policy*

24VAC30-73-10 provide the following definition: "Limited Access Highway" means a highway especially designed for through traffic over which abutting properties have no easement or right of light, air, or access by reason of the fact that their property abuts upon the limited access highway.

Code of Virginia Section *33.2-401* provides the Commonwealth Transportation Board (CTB) with the power and authority to designate and regulate the use of limited access (L/A) highways.

By resolution, the CTB designates a section or all of a proposed or existing highway or street as a limited access facility within the limits described in the resolution, less any access breaks that may be excepted in the resolution.

The actual width of the limited access portion of the right of way is established by the Chief Engineer as a part of the design approval process. The Right of Way Division is responsible for the actual acquisition of the right of way and limited access rights and the disposal of same when authorized by the CTB.

24VAC30-401-20, Section C.3, 3a state: “Prior to review by the department, requestors shall: pay for expenses associated with the departments posting of a Willingness for Public Comments notice to allow public input to be collected concerning the request prior to CTB action. If the requestor is a locality making a request for change in limited access control for public transportation purposes, the Chief Engineer may waive the requirement to pay for the posting.”

Virginia Administrative Code (VAC) Section *24VAC30-401-10* requires CTB action on any limited access control changes that “occur” after a project is completed, finalized and serving in its intended capacity.”

* 7/16

Pedestrian and Bicycle Facilities

24VAC30-151-600 Pedestrian and bicycle facilities.

The installation of sidewalks, steps, curb ramps, shared use paths, pedestrian underpasses and overpasses within right-of-way may be authorized under the auspices of a single use permit. VDOT shall maintain those facilities that meet the requirements of the Commonwealth Transportation Board's Policy for Integrating Bicycle and Pedestrian Accommodations (see *24VAC30-151-760*). The maintenance of sidewalks, steps, curb ramps, shared use paths, pedestrian underpasses and overpasses not meeting these requirements shall be subject to permit requirements, and the permittee shall be responsible for maintenance of these facilities.

The installation of pedestrian or bicycle facilities within limited access right-of-way shall be considered a change in limited access control and requires approval of the Commonwealth Transportation Board prior to permit issuance (see Change of Limited Access Control, *24VAC30-151-760*). The installation of pedestrian or bicycle facilities parallel to and within the right-of-way of non-limited access highways crossing limited access highways by way of an existing bridge or underpass shall not be considered a change in limited access but shall require the approval of the Commissioner of Highways prior to issuance of a permit for such activity.

Establishing New Limited Access Control

Proposed limited access lines and limits shall be shown on the proposed project plans for public hearing and throughout the plan development process. Evaluation of the effect of the L/A control and proposed refinements should be considered through field inspection stage and after the public hearing should L/A concerns be raised as a comment. The CTB shall take action on establishing all New Limited Access Control prior to granting Design Approval. *

On all projects designated as "Limited Access Highways", the date of the resolution passed by the commission, Board, etc., and the words "LIMITED ACCESS HIGHWAY" as well as any previous CTB L/A approval shall be shown above the project block on the title sheet and on each applicable plan sheet prior to approval for Right of Way.

* Rev. 1/21

Guide to Changes to Existing Limited Access Control

1. New project requiring a change or modification to the existing Limited Access Control:

   a. Any changes in the Limited Access termini OR the modification of the existing Limited Access lines to widen or narrow the existing width of Limited Access control requires VDOT's evaluation and CTB approval. The CTB shall take action on all Limited Access Control Changes (LACCs) prior to granting Design Approval.*

   b. Once the modified Limited Access lines have been approved (by the CTB) for the proposed project and the proposed project is still under construction / design, changes to the Limited Access termini, including breaks in the limited access, may need to be approved by the CTB. However, changes in the width (to widen or narrow) any and all lines of the Limited Access within the established termini may be recommended for approval by the State Location and Design Engineer to the Chief Engineer. However, the issue should be reviewed with the appropriate Assistant State Location & Design. Once the project has opened and begins serving its intended purpose, then any changes in the termini OR width of the Limited Access control shall to be approved by the CTB.

   c. If a structure is to be constructed over a limited access highway and the proposed break in limit access provides connection to the limited access facility then it shall be approved by the CTB. However, if the structure does not provide connection to the limited access facility then the CTB approval is not required.

2. Changes on Completed VDOT Projects

   Section *24VAC30-401-10* is effective after a project is completed, finalized and serving in its intended capacity. Any proposed limited access changes as defined by the VAC requires CTB approval and shall be processed in accordance with the remaining Sections of *24VAC30-401*.

Should you have questions or concerns regarding these guidelines or any other types of work such as the installation of utilities on limited access highways, please visit the Right of Way and Utilities Division website at *http://www.virginiadot.org/business/row-default.asp*

The VDOT Utility Manual of Instructions – Utility Relocation Policies & Procedures can be accessed at *http://www.virginiadot.org/business/resources/Right_of_way/Utility_Manual02132012_TechRev.pdf*

* Added 1/21

Items needed for Commonwealth Transportation Board (CTB) Approval

Below is a list of items necessary to complete the draft resolution and brief for the Commonwealth Transportation Board (CTB) related to Limited Access Control Changes (LACC);

- Marked exhibit (8.5" x 11", Provided by the District)
- Plan sheet(s) with existing Limited Access Line shown, (Provided by the District)
- Vicinity Map (8.5" x 11", Provided by the District)
- Local support specific to the requested LACC (resolution, letter, etc., Provided by the District)
- Email of approval from Assistant State L&D Engineer
- Notification of FHWA from Assistant State L&D Engineer (when needed)
- Copy of the Public Hearing Brochure and Transcript (including information on design elements or improvements, location, NEPA documents, etc., Provided by the District)
- List of tables of stations/offsets of limited access points (Provided by the District)
- Resolutions of previous LACC for the specific Route (Provided by the District)
- Draft decision brief and resolution (Provided by the District)
- When was the traffic analysis reviewed and approved by VDOT? (Provided by the District)
- Is the project in a non-attainment area? When was the air quality conformity review completed? (Provided by the District)
- What type of environmental document was completed and when was it approved? (Provided by the District)

Note: The Willingness and/or Public Hearing Advertisement shall include the following language: "This project will involve a change and/or break in limited access control." See VDOT Public Involvement Advertisement Flow Charts.*

Items needed for Chief Engineer Approval

Below is a list of items necessary to complete the draft letter for the Chief Engineer related to the adjustment or elimination of Limited Access Control Changes (LACC);

- Exhibit (plan sheet) showing the existing and proposed Limited Access Line(s) (with the proposed Limited Access CTB approval date shown in the legend. Provided by the District)
- Original letter from the Chief Engineer to the CTB members requesting the proposed LACC (Provided by the District)
- Final Resolution of the CTB approval of the proposed LACC (Provided by the District)
- Draft letter to Chief Engineer requesting approval of adjustment or elimination (Provided by the District)
- Central Office Right of Way Approval (Provided by the C.O. L&D)
- FHWA Approval (if applicable) (Provided by the C.O. L&D)
- Letter from the State Location and Design Engineer to the Chief Engineer for approval (Provided by the C.O. L&D)

* Added 1/21

LIMITED ACCESS LINES

Where limited access lines coincide with proposed right of way lines, the common line is to be labeled "Proposed Right of Way and Limited Access Line" with breaks shown as previously described for proposed right of way.

Where limited access lines deviate from proposed right of way, they are to be shown as dashed lines and are to be labeled "Proposed Limited Access Line."

Proposed limited access lines are to be continuous for the length of the project, except at interchanges. Where frontage roads are provided, the limited access line is to tie to the proposed right of way line at appropriate points and usually run parallel to and between the frontage road and mainline. Where applicable, the limited access line is to be labeled: "Proposed Limited Access Line (insert distance) from and parallel to Frontage Road Baseline."

At interchanges, the limited access lines are to encompass the entire periphery of the interchanges and shall extend beyond the ramp terminals to meet the Access Management Standards (Appendix F) for minimum spacing standards for entrances and intersections from interchange ramps. The beginning and ending points of limited access lines are to be flagged with "Begin" and "End Limited Access" with stations referenced to the connecting road. Limited access lines are to be broken and flagged with stations based on the mainline at grade separations.

Unless specifically advised to the contrary by the Right of Way Division, begin and end limited access is to be flagged only at or near the beginning and end of the right of way project and at interchanges and grade separations as previously noted.

On all projects designated as "Limited Access Highways", the date of the resolution passed by the commission, Board, etc., and the words "LIMITED ACCESS HIGHWAY" as well as any previous CTB L/A approval shall be shown above the project block on the title sheet and on each applicable plan sheet prior to approval for Right of Way.

This is applicable to all new projects and also to all projects involving previously designated "Limited Access Highways".

LIMITED ACCESS FENCING

Fencing along a controlled access highway is required as a means of preventing unwanted and likely intrusion of animals, people, vehicles, machines, etc., from outside the right of way line or access control line into the vicinity of moving traffic or onto the operating right of way. This applies to both full and partial controlled facilities. In accordance with the *Code of Virginia* Section *33.2-401*[*], if a limited access highway is subsequently incorporated into the street system of a municipality, the municipality may discontinue any limited access feature including the limited access fencing only with the approval of the CTB. For additional information see “FENCE” in this chapter.

[*] Added 1/21

Over the years the "Highway Commission" has been updated to the "State Highway and Transportation Commission", the "State Highway and Transportation Board" and as of January 1, 1987, is the "Commonwealth Transportation Board".

Following are the notes that are to be used along with the applicable project situations:

(1) LIMITED ACCESS HIGHWAY **By Resolution of Commonwealth Transportation Board dated _____.**

All projects designated after December 31, 1986 by "Commonwealth Transportation Board" (includes interstate and other highways that tied the original L/A line down by stations and thereby, require a new resolution)

(2) LIMITED ACCESS HIGHWAY **By Resolution of Highway Commission Dated _____.**

All interstate highways and all highways previously designated by "Highway Commission".

DEPICTING LIMITED ACCESS RIGHT OF WAY

The method of designating Right of Way on a proposed limited access project shall* be as indicated in Figures 2E-19 and 2E-20. Unusual conditions, not covered by these examples, may require individual study and should be discussed at Field Inspection.

* Rev. 1/21

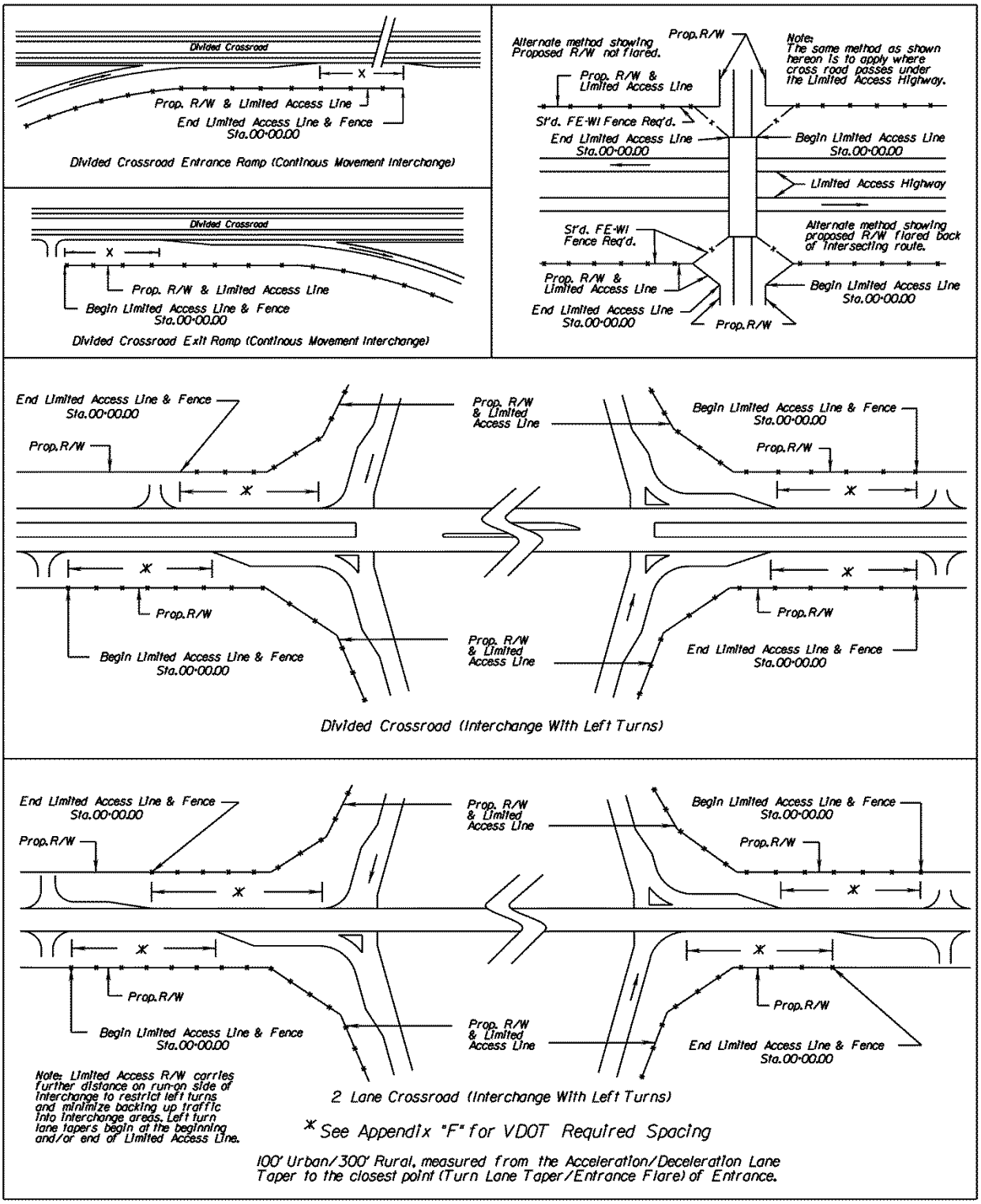

FIGURE 2E-19* DEPICTING LIMITED ACCESS RIGHT OF WAY

* Rev 10/20

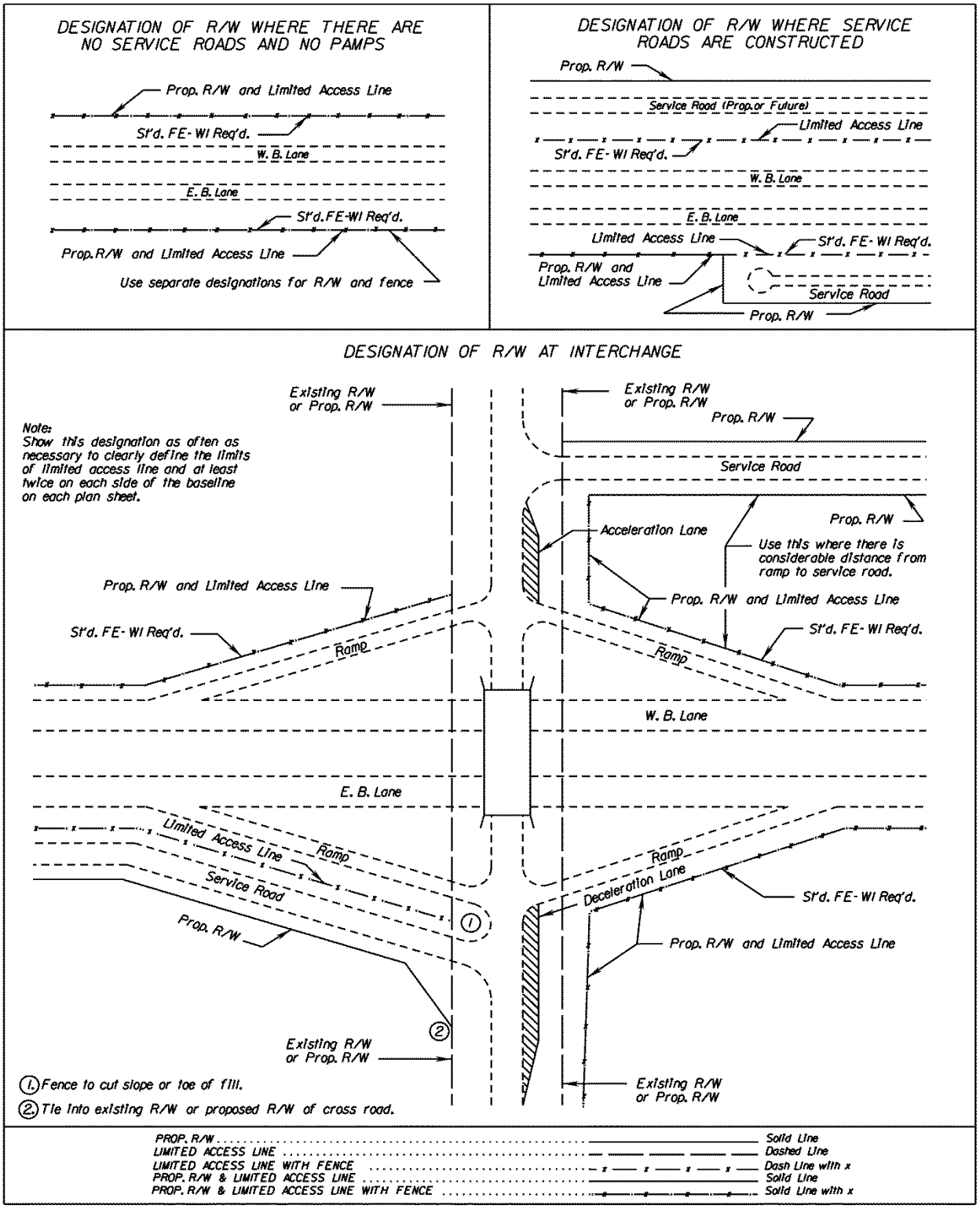

FIGURE 2E-20* DEPICTING LIMITED ACCESS RIGHT OF WAY

* Rev 10/20

DETERMINING SURPLUS RIGHT OF WAY

Prior to presenting the plans for public hearing the designer shall designate (with the Residencies concurrence) all areas on the project that are currently existing right of way that can be designated “Surplus Right of Way”. By labeling the surplus in this manner, the surplus property has been established and will be included in the Right of Way Division’s “Residue Parcels Inventory” for disposal purposes.

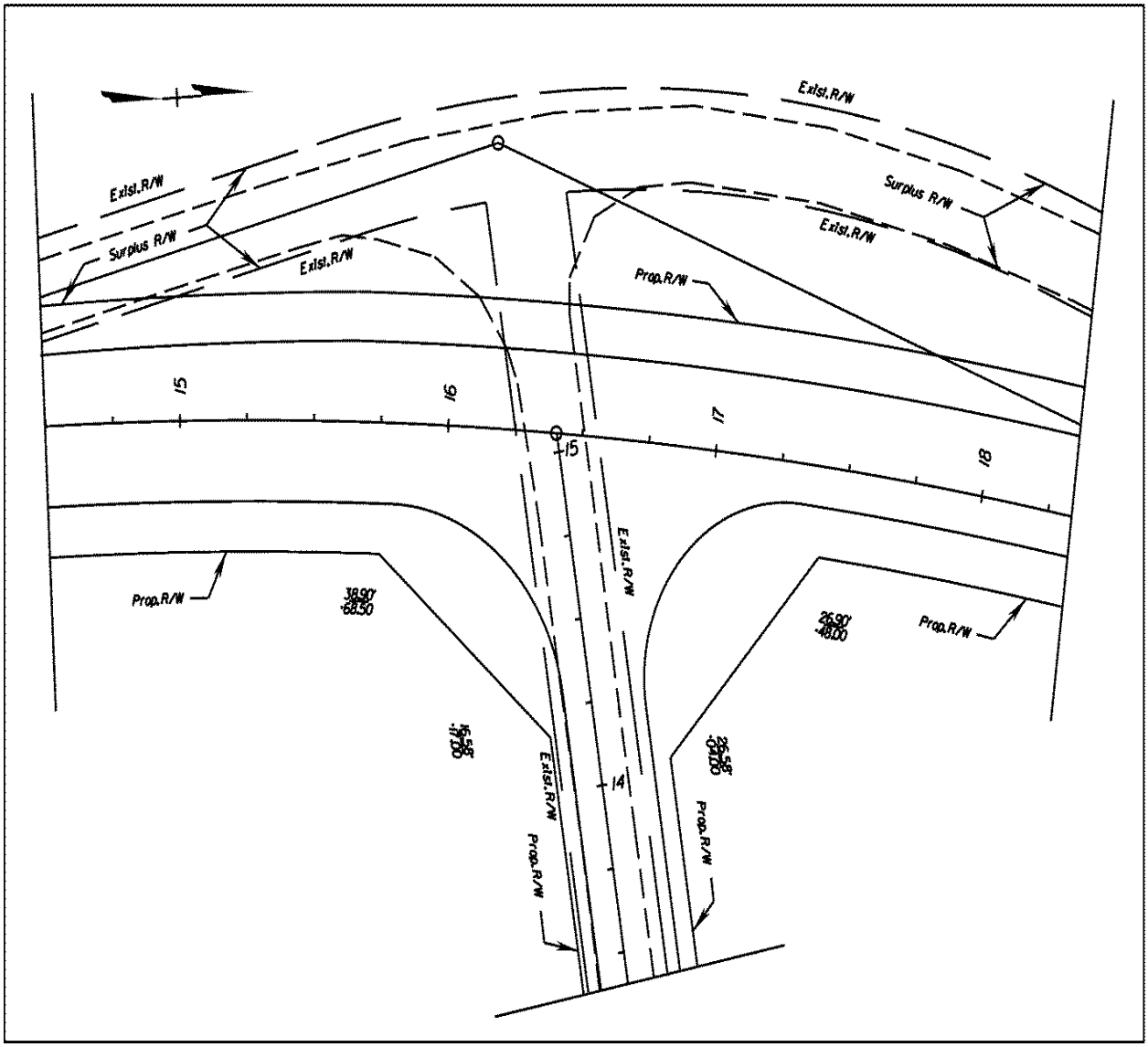

FIGURE 2E-21 SURPLUS RIGHT OF WAY*

* Added 10/20

RIGHT OF WAY DESCRIPTION FURNISHED TO ENVIRONMENTAL DIVISION

The environmental planning process requires that the following right of way data must be furnished to the Environmental Quality Engineer upon request for an environmental document.

1. Both a right of way description and estimate of total right of way area will be included in all categorical exclusions and Environmental Assessment Documents.

2. The U.S. Farmland Protection Act requires that all federally funded highway projects be coordinated with the U.S. Soil Conservation Services to determine impact, if any, upon Farmlands. The process for coordination with the U.S. Soil Conservation Service requires that an estimate of the area of right of way for all projects be provided to the district conservationist.

"Right of Way", regarding the description and area, is defined as fee-simple right of way, temporary and permanent easements and donations of lands. Specify if the land required for "Right of Way" is developed residential, commercial, and/or industrial.

The following are example statements describing the right-of-way for an environmental assessment.

1. Less than 10 feet strips on both sides of the roadway for the length of the project.

2. Less than 5 acres for widening and removal of several hairpin curves.

3. Approximately 2 acres of right of way and easements for constructing bridge and improving 1000 feet of approaches.

There are other situations which will require right of way descriptions and area estimates other than the above examples.

The area can be just a rough approximation of the combined right of way, easements, etc., and should entail only a minimum amount of calculation. This area will be helpful to the FHWA in deciding whether more than minor amounts of right of way are involved.

PLAN REVISIONS

When a request is made to revise plans that would change a proposed right of way line or proposed easement, the request should indicate to the designer if the property has already been acquired. If so, the original proposed right of way line or proposed easement is not to be removed from the plans and is to be designated as follows:
"Orig. Proposed Right of Way" or "Orig. Proposed type of easement". Label the revised right of way or easement lines "Rev. Prop. Right of Way (date)" or "Rev. Prop. type of easement and (date)," respectively.

SECTION 2E.6 PREPARATION OF SUPPLEMENTAL SHEETS

TITLE SHEET

(See *Chapter 2H, Figures 2H-1, 2H-2* for sample sheets)

A title sheet is to be prepared generally for each project or group of projects previously determined to be advertised simultaneously. The basic sheet is to be adapted to all uses (such as limited access, urban projects, secondary projects, etc.)

IDENTIFICATION

The project base number(s) on all projects are to be shown in the block provided in the upper right corner of the title sheet. For Federal projects, an identifier will be added as a prefix to the project number on the title sheet. This identifier will be (FO) for projects with Federal Oversight that are Projects of Corporate Interest (POCI) or Projects of Division Interest (PODI) as described in the latest FHWA-VDOT Stewardship and Oversight Agreement. The identifier will be (NFO) for projects with no federal oversight. Federal-Aid number(s), when applicable, will be shown in this block (on the title sheet only), showing the parentheses without numbers within. All project numbers are to be referenced with a note to "see the project length tabulation block". The project base number(s) are to be shown in the block provided in the lower right corner of the sheet. The Federal-Aid number is to appear on the title sheet only.
See Example below:

STATE	FEDERAL AID	STATE		SHEET NO.
	PROJECT	ROUTE	PROJECT	
VA.	RS – 425 ( ) SEE Tabulation Below For Section Numbers	668	(FO)0668-071-112 SEE Tabulation Below For Section Numbers	1

The Highway Capital Outlay Code (FHWA-534) is to be shown on the title sheet in the upper right-hand corner to the left of the project number block. (See *IIM-LD-204*[*] for further instructions).

The title sheet is always numbered "1".

The names, phone numbers, including area code, and District, if applicable, of the following persons are to be shown in the upper left corner: Project Manager: (VDOT), Surveyed By and Date completed: (L&D Survey Office Manager or Firm and Consultant Survey Project Manager), Design By: (Responsible Person) and Subsurface Utility Provided By and Date (completed):

Copyright date is to be shown directly below the signature blocks in the lower right corner. (See *IIM-LD-204*).

[*] Rev. 7/16

For additional notes to be shown on the title sheet. See *IIM-LD-204*.

The appropriate TC-5 designation (TC-5.11U, TC-5.11ULS, TC-5.11R, TC-5.04 ULS, TC-5.01U, or TC-5.01R) must be shown on the title sheet.

LAYOUT

A layout of the project limits is to be plotted depicting the existing baseline of the mainline roadway, interchanges, connections, railroads, rivers, major (usually named) streams, and major landmarks. Street names, as well as route numbers, are to be shown where applicable. These items are to be labeled in accordance with the VDOT's *CADD Manual* with destination for the mainline, connections, and railroads. Flow arrows are to be shown for rivers, etc.

The layout is to be plotted to a reasonable scale large enough to utilize the space provided but not so large as to encroach on other items (index, project tabulation, etc.).

Description reference blocks are to be shown to coincide with the construction project description and previous projects. This identifies the horizontal location of a critical reference point on the project such as a road intersection, bridge or a well-known landmark. *

The number of and distance to the nearest railroad mile post is to be shown if the project crosses or involves a railroad.

A heavy solid line is to be shown depicting the proposed mainline, connections, ramps, frontage roads, etc., with station marks shown at appropriate intervals depending upon the length of the project.

Station numbers are to be shown above the station marks in accordance with the VDOT's *CADD Manual* readable from the right end of the sheet.

Light dashed lines are to be shown over the layout delineating the limits of each plan sheet with the corresponding sheet numbers shown within light dashed circles.

Proposed bridges, culverts, or other items requiring "B" or "D" numbers are to be clearly shown and labeled in accordance with the applicable "B" or "D" number. (See Project Length Tabulation, this section)

Interchange ramps are to be labeled with the description used on the plans. (Ramp "A", etc.)

* Rev. 7/13

Vertical lines are to be projected upward from the begin and end project points with the applicable State project numbers shown in accordance with the VDOT's *CADD Manual* along horizontal lines between them. Begin and end project station numbers are to be shown in accordance with the VDOT's *CADD Manual* along the vertical lines. If the preliminary engineering project limits extend beyond the normal project limits, the arrows for the PE numbers are to extend beyond the vertical lines indicating continuation of the project.

Tie-in project numbers are to be shown on each end of the project, where applicable, showing status such as "Under Const.", "Under Design", etc.

A north arrow and bar scale is to be shown in conspicuous locations with the scale in the lower center or right area of the layout.

DESCRIPTION

The county or city name is to be shown in the center of the title sheet, directly below the line under the large pre-printed title. Directly below this line, centered horizontally, is shown the project description, with distances from intersections, etc., shown to the nearest thousandth of a mile (kilometer).

If a "from" and "to" description is used, "from" is shown on the top line and "to" on the bottom. Descriptions are to be referenced from the intersection of the construction baseline and* items such as county or city lines, primary routes, secondary routes, rivers or major streams, railroads, etc.

In cases where the mainline has a designated commonly used street name, it is to be shown between the county or city name and the description.

PROJECT LENGTH TABULATION BLOCK

A block is to be provided in the lower center of the title sheet for the following information;

The population and census year within the county and/or municipality boundaries is to be shown above the length tabulation block.

A note is to be shown directly below the length tabulation block detailing the method used in computing project lengths, such as:

"Note: Project lengths are based on Route 00 Survey baseline between Sta. 00+00.00 and Sta. 10+00.00 and on Off. Rev. baseline between Sta. 10+00.00 and Sta. 20+00.00."

State Project No." - Listing of applicable state project base numbers

---

* Rev. 7/17

Section" - Listing of various section numbers such as "PE-101", (if the PE number extends beyond the limits shown on the layout, no reference is to be made in the length tabulation) "RW-201", "G-301", "P-401", "C-501", "B-601", etc.

"Federal Project No." - Listing of complete Federal project number

"Type Code No."- Listing of applicable Type Code Nos. such as "F000", "I000", "K000", etc. are to be shown in the Construction "C", Bridge "B" and Drainage Structures "D" section Only. See Figure 2E-23 for Type Code numbers.

"UPC No." - Listing of applicable UPC Nos.

"Exceptions", feet - Listing of exception lengths where applicable "Length, feet, miles" - Listing of lengths of various roadway sections - to be shown to the nearest hundredth of a foot and nearest thousandth of a mile.

"Length Including Bridges", "Length Excluding Bridges", listing of bridge lengths based on the same line as the roadway lengths and affecting the roadway lengths; "Length Including Box Culverts", "Length Excluding Box Culverts", listing of box culvert lengths based on the same line as the roadway lengths and affecting the roadway lengths (Only where traffic is placed directly on the top slab of the box culvert). All "B" and "D" projects are to be shown in the length tabulation block, but are to be included in the headings of the length columns only where they affect the roadway project length.

Bridge Plan Number – This number can be found on the lower right hand corner of the bridge title sheet, example 345-10.

"Type Project" - Listing of project types such as: "Preliminary Engineering.", "Right of Way", "Grading", "Paving", "Construction", "Bridge", etc.

"Description" - Listing of various section descriptions. See example:

STATE PROJECT NO.	SECTION	FEDERAL AD PROJECT NO.	TYPE CODE	UPC NO.	LENGTH INCLUDING BRIDGES		LENGTH EXCLUDING BRIDGES		BRIDGE PLAN NO.	TYPE PROJECT	DESCRIPTION
					FEET	MILES	FEET	MILES			
0668 – 071 - 202	C - 502	RS –425 ( )	F000	559	18,793.06	3.559	18,461.88	3.496		CONSTR.	From: 0155 MI. E. Rte. 640
	PE-101	RS –425 ( )		559	18,793.06	3.559	18,461.88	3.496		Prel. Engr.	To: 0138 MI. W. Rte. 807
	B - 601	RS –425 ( )	X020	425	332.64	0.063					Bridge Carrying Rte. 668 over Peachtree Creek (State Str. No. 3071)*
	RW-201	RS –425 ( )		559	18,793.06	3.559	18,461.88	3.496		R.O.W.	From: 0155 MI. E. Rte. 640
											To: 0138 MI. W. Rte. 807

All drainage structures measuring over 20 feet along the roadway centerline between the inner faces of the outer walls (as defined by 23 CFR 650 © National Bridge Standards, Section 650.301, Application of Standards) are classed as major structures and are to be set up as separate projects with separate lengths. Multiple lines (two or more pipes) will be considered a "major structure" when, if measuring along the roadway centerline, the

* Rev. 7/19

distance between the interior of the outer most pipe walls exceeds 20 feet. The Structure & Bridge Division should be consulted in instances where the application of this guideline requires interpretation. The stations and length used on the plans for culverts measuring over 20 feet shall be based on the distance between the back of the outside walls along the construction baseline, not on the distance between the faces of same. Separate quantities are to be shown on the plans and estimates for these structures. In cases where the roadway and surfacing is carried over but is not a part of the structure, the roadway and surfacing quantities are not separated on the plans and estimates, but are included in the roadway project.

If no work is proposed on an existing major structure, it should not be set up as a separate project, but shown as an exception to the roadway project. Minor structures of less than 20 feet, however, should never be shown as exceptions.

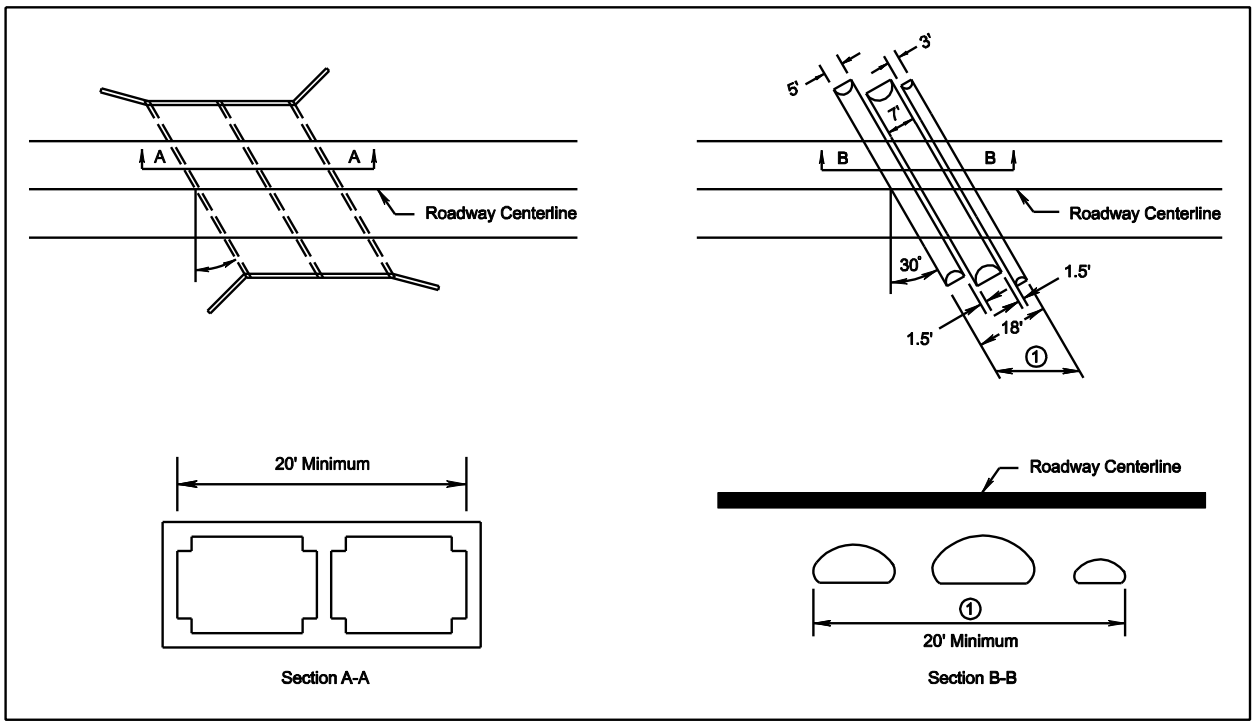

FIGURE 2E-22 MEASURING "D" LIMITS ON PLANS*

"D" numbers shall also be assigned to all drainage structures, single and multiple lines (two or more) with openings equal to or greater than 36 S.F. The Drainage Designer will communicate the number of structures meeting this requirement to the Roadway Designer and he or she will communicate this information to the Project Manager

* Added 10/20

"B" PREFIX	"D" PREFIX
Special Design Bridges	Standard Box Culverts (See criteria on previous page)
Standard Slab Span Bridges	Single Line Pipe Culverts (openings ≥ 36 SF)
Special Design Box Culverts	Multiple Line Pipe Culverts (openings ≥ 36 SF)
Special Design Rigid Frames	
Special Design Arches	
Special Design Three-sided Structures	

The identification numbers "B" or "D" are to be requested by the Project Manager using the Project Pool and will be assigned initially in sequence, without regard to the prefix "B" or "D"; i.e. B-601, B-602, D-603, D-604, B-605, etc. Construction Type Codes for roadway and surface type, bridge type (includes culverts - any type box or culvert), and miscellaneous type construction are required for each construction section on all projects, e.g., C-501, B-601, D-602, C-502, L-801, S-901, etc. The Type Codes, as noted in Figure 2E-23*, are required on the plans and are to be shown on the title sheet in the project length tabulation block adjacent to the Federal-Aid Project number block (regardless of whether the project is federally funded) for the applicable Section Number.

No Plan and Minimum Plan project Type Codes are to be shown on the title or cover sheet and are to be handled in variations of the above procedure, as required. This is also to apply to project plans, such as Landscape, Signs, etc., prepared by other divisions that do not require road plans.

The Bridge Type Code is noted on the bridge plan cover sheet in the upper right hand border beside the project block and also on their final review transmittal Form B-45A or B-45B adjacent to the copy transmittal listing to the FHWA as - Bridge Type Code: X.

The Type Code is also to be shown in the Engineering Estimate.

FUNCTIONAL CLASSIFICATION -TRAFFIC DATA

A block is to be shown in the upper right corner below the project number block listing the class or type of road, whether divided or undivided roadways, type of terrain (level, rolling, or mountainous). See *IIM-LD-204* for further instructions. Traffic data is listed below this information, in the same block, as furnished to this Division by the Traffic Engineering Division or from the Transportation and Mobility Planning Division. Exceptions to the controlling criteria are to be noted as shown in *Section 2D.8 DESIGN EXCEPTIONS*.

The functional classification, ADT and minimum design speed for all connections with the mainline where construction is to take place beyond the radius return shall be determined and identified in the plan set. Depending upon the number of impacted connections, this information can be listed on the Title Sheet under the mainline information, or a note can

* Rev. 7/16

be placed under the mainline information directing plan reviewers to the location where this information is provided. For example, connection functional classification, ADT and minimum design speed is provided on the applicable plan sheets, profile sheets and typical section sheets.

NOTES

Notes are to be shown in the lower left corner of each title sheet furnishing curve superelevation data, specifications and standards data, and the "design features" note as shown in *Chapter 2H, Figures 2H-1 & 2H-2*.

The following note is to be placed in the upper left hand corner; *

For OpenRoads/ GEOPAK / Projects:

> THIS PROJECT WAS DEVELOPED UTILIZING THE DEPARTMENT'S ENGINEERING DESIGN PACKAGE (OpenRoads / GEOPAK)
>
> OpenRoads / GEOPAK Computer Identification No. (UPC NUMBER)

Project Location Map (Secondary Projects)

On Secondary Projects the project location map is to be shown in the upper right corner and is to show sufficient surrounding area to provide obvious location of the proposed project. (See *Chapter 2H, Figure 2H-3*)

PROJECT SECTION NUMBERS

When determining the extents for placing project number flags on the title sheet and appropriate plan and profile sheets, see Chapter 2D.10 Showing Project Termini on Plans.*

Project section numbers (PE, RW and C or M) are to be shown as follows:

Preliminary Engineering (PE-) number is to be shown only on the title sheet (for example see *Chapter 2H, Figures 2H-1 & 2H-2*) and the first and last plan and profile sheets identifying the project termini's (for example see *Chapter 2H, Figures 2H-31 & 2H-35*).

Right of Way numbers (RW-) are to be shown in the upper right hand corner on all plans, profiles, detail sheets (pertaining to R/W only) and cross sections.

Construction or Minimum Plan numbers (C- or M-) are to be shown in the upper right hand corner on all sheets including plans, profiles, detail sheets and cross sections.

---

* Rev. 7/20

WORK CLASS

P	Planning (HPR/PR)	1	Preliminary Engineering
R	Research (HPR/PR)	2	Right of Way
T	Transit Related or Training	3	Construction

2/ ROADWAY AND SURFACE WORK TYPES

A000	Primitive	G000	Mixed Bituminous
B000	Unimproved	H000	Bituminous Penetration
C000	Graded and Drained Earth	I000	Bituminous Concrete
D000	Soil Surface	J000	Portland Cement Conc.
E000	Gravel or Stone	K000	All others
F000	Bituminous Surface Treatment		

Notes: All bituminous Surface Types to be Asphalt in Virginia

2/ BRIDGE WORK TYPE

X_ _ _ The first digit (code X) indicates bridge class
The second digit indicates nature of structure

XO_ _ Highway over waterway
X1_ _ Highway over railroad
X2_ _ Highway project over highway
X3_ _ Highway over waterway and railroad
X4_ _ Highway over waterway and highway
X5_ _ Highway project over railroad and highway
X6_ _ Highway under railroad
X7_ _ Highway project under highway
X8_ _ Highway project under railroad and highway
X9_ _ Other combination, including Highway over waterway, RR and highway also 3- and 4- level grade separations and miscellaneous.

The third digit identifies the material of principal supporting members of the span.

X_0_ Timber
X_1_ Masonry
X_2_ Concrete, not prestressed
X_3_ Steel
X_4_ Steel and concrete
X_5_ Timber and steel
X_6_ Timber and concrete
X_7_ Composite steel and concrete
X_8_ Concrete, prestressed
X_9_ Aluminum

The fourth digit identifies type of span (identifies main span type
f bridge comprises 2 or more span types)

X_ _0 Slab
X_ _1 Girder
X_ _2 Truss (except cantilever)
X_ _3 Rigid frame
X_ _4 Arch
X_ _5 Cantilever truss
X_ _6 Movable
X_ _7 Suspension
X_ _8 Box Culvert (bridge length) (any type Box or Pipe Culvert)
X999 Highway tunnel

2/ Roadway and surface type and bridge types:
First digit is alpha, remaining digits are numeric

SUPERVISING AGENCY

S – State
D – FHWA Direct Federal Construction

1/ MISCELLANEOUS WORK TYPE CODES

Y000	Miscellaneous (must have approval from FHWA, Washington Office)
Y002	Traffic Signs
Y003	Landscaping (planting and related work)
Y004	All clearing (includes acquisition or removal of advertising signs, acquisition of property rights-junk yards, removal or relocation)
Y005	Planting of Wildflowers
Y007	Minor structure, (storm sewers, culverts, snowshed, etc.)
Y008	Channelization of traffic
Y009	Slope stabilization/slide protection
Y010	Coal Ash
Y021	Safety rest areas and scenic overlooks
Y022	Comfort and convenience facilities
Y023	Screening unsightly areas
Y024	Recreational facility
Y025	Fringe parking
Y026	Carpool facility (HOV)
Y028	Vanpool acquisition
Y030	Highway lighting
Y031	Traffic signals
Y032	Freeway traffic surveillance and control systems
Y033	Computerized traffic signal system
Y034	Motorist and system
Y035	Highway information
Y036	Computerized matching program
Y041	Special relocations (rivers, channels, etc.)
Y050	Frontage road
Y051	Independent Pedestrian Walkways
Y052	Independent Bicycle Facilities
Y060	Utility adjustment
Y070	Archeological salvage
Y071	Paleontological salvage
Y072	Historical, archeological or scientific site
Y080	Training (construction contracts)
Y081	Training (NHI)
Y102	Fencing
Y108	Transit passenger facilities
Y109	Truck loading facility
Y110	MCSAP (Development Code)
Y111	MCSAP (Enforcement Program)
Y112	CDL (Developmental)
Y113	CDL (Testing operators)
Y200	Bus purchases
Y205	Purchase of rolling stock (fixed rail)
Y210	Administrative expenses
Y215	Operating expenses (net)
Y219	Ferry boats
Y220	Noise abatement
Y222	Truck scales, fixed
Y223	Truck scales, portable
Y224	Auto restricted zone
Y225	Terminal and transfer facilities
CENG	Construction Engineering
GMKR	Geodetic markers
INSP	Bridge inventory, inspection and classification and other special bridge projects
MAIN	Maintenance
PCON	Post construction
PENG	Preliminary engineering
PE-1	Route planning, location studies (Appalachian funds only)
PE-2	Engineering design and construction plans (Appalacian)
PLAN	Planning (HPR, PR and PL funds)
RESH	Research (HPR, PR, and PL funds)
ROWA	Right-of-Way
R/WS	Acquisition of scenic strips outside of ROW
RW/O	Replacement Housing Payments – Owners
RW/T	Replacement Housing Payments – Tenants
R-MP	Residential Moving Payments
RW/B	Business and Farm Payments
R-SC	Relocation Services Costs
SFTY	Safety Related Work
UPLN	Urbanized Planning
YHOV	HOV Facility

1/ Y – Miscellaneous types first digit alpha. remaining digits numeric:
Beginning with "CENG" the "O" s are alpha

FIGURE 2E-23* CONSTRUCTION TYPE CODE FOR HIGHWAY IMPROVEMENTS

* Rev 10/20

INDEX OF SHEETS

An index showing each sheet number and description is typically shown on a separate plan sheet and assigned sheet number 1B. The index of sheets can be shown on the Title sheet when practical and the sheet numbers adjusted accordingly.

Sheet No. 1 is always assigned to the Title Sheet.

Sheet No. 1A is typically assigned to the Project Location Map, Sheet No. 1B is assigned to the Index of Sheets and Sheet 1C is usually assigned to the Right of Way Data Sheet. (Note: Numbering in the "1" series may need to be adjusted to allow for the exclusion of sheet(s), such as the Project Location Map).

Some plans are broken into smaller projects with two, three, or more projects using the same title sheet.

A proposed method for the index of sheets is shown in *Chapter 2H, Figure 2H-4*

Sheet No. 1D is assigned to the Revision Data Sheet.

Sheet No. 1E is assigned to the Stream Flow Hydrograph Sheets, as provided by the Hydraulics Designer, when applicable.

Sheet No. 1F, 1G, etc., are assigned to the Alignment Data Sheet, when applicable.

Sheet No. 1H is assigned to the Underground Utility Test Hole Information Sheet.

Sheet No. 1J, 1K etc., (picking up from the last applicable number) are assigned to Maintenance of Traffic and Sequence of Construction Sheets where applicable.

Sheet No. 2 is assigned to the General Notes Sheet.

Sheet No. 2A, 2B, etc., are assigned to Typical Section Sheets, Detail and Insertable Sheets, Environmental Commitments Summary Sheet*, Special Design Sheets, Summary Sheets and the Hydrologic Data Sheet, where applicable.

Sheet No. 3, 4, etc., are assigned to Plan Sheets.

Sheet No. 3A, 4A, etc., are assigned to Profile Sheets following each corresponding plan sheet.

Sheet No. 3RW, 4RW, etc., are assigned to Right of Way Plans (See *Chapter 2H, Figure 2H-4 SAMPLE INDEX SHEET*).

---

* Rev. 7/21

The sheet following the last profile sheet is assigned to Drainage Descriptions.

Storm Sewer Profile Sheets (If needed) are assigned one number with the total number of sheets afterwards in parentheses, such as: Sheet No. 7 (1 thru 10).

The sheet no. following the last Storm Sewer profile sheet is assigned to Sign Plans, where applicable. All sign plan sheets are assigned one number with the total number of sheets afterwards in parentheses, such as: Sheet No. 8 (1 thru 10).

The next sheet number is assigned to Lighting Plans, similar to "Sign Plans".

Signal Plans are numbered next, similar to "Sign Plans".

Pavement Marking and Marker Plans comes next.

The next sheet number is assigned to Utility Adjustment Plans; see VDOT *Survey Manual*, Chapter 8* where applicable, similar to above.

Landscape Plans are number next.

The total number of cross section sheets is shown below the last listed sheet.

Bridge Plans will be assigned a Plan No. and Sheet No. by the Structures & Bridge Division. The bridge plans will follow the cross sections and listed as “Special Design Bridge Plan Sheets, “B” No., Plan No. (Number of Sheets)”, followed by a brief description.

Any remaining sheets will follow, in order, those listed.

For Federal Projects, the complete Federal Project Number(s) is to be shown on all title sheets.

The following Note is to be shown in the upper left portion of the Title Sheet:

For Index Sheets see Sheet 1B.

* Rev. 1/15

PROJECT LOCATION MAP

(See *Chapter 2H, Figure 2H-3*)

A project location map sheet is to be included on all projects and is to show sufficient surrounding area to provide obvious location of the proposed project.

Applicable project numbers are to be shown in the proper blocks and Supervisor's and Designer's name and phone number (including area code) are to be shown in the left border.

The project construction baseline is to be made conspicuous by use of a heavy line, dashed line, etc., so that it will stand out over other items on the sheet. Lines are to be extended (usually upward) from the ends of the project and expanded, if necessary, so that the project numbers can be shown along longitudinal lines similar to those on the Title Sheet.

Tie-in project numbers are to be shown on each end of the project, where applicable.

RIGHT OF WAY DATA SHEET

(See *Chapter 2H, Figure 2H-5*)

A Preliminary Right of Way Data Sheet is to be included in each applicable set of plans. See VDOT *CADD Manual*, Chapter 5, Section 5.15.

The "RW" project number is to be shown in the appropriate blocks (construction project numbers are not applicable to this sheet), and the names and phone numbers, including area code, and District, if applicable, of the following persons are to be shown in the upper left corner: Project Manager: (VDOT), Surveyed By and Date completed: (L&D Survey Office Manager or Firm and Consultant Survey Project Manager), Design By: (Responsible Person) and Subsurface Utility Provided By and Date (completed):

After the Preliminary Field Inspection and prior to the Public Hearing, the designer will send the Regional Right of Way Manager a blank print of this sheet. As the parcel numbers are assigned, the Regional Right of Way Office will enter the parcel numbers, landowners, proffers, and corresponding plan sheet numbers on the print and return it to the Central Office Right of Way Division who will provide the sheet(s) to the appropriate Design Engineer, either in the District or Central Office, for inclusion in subsequent plan submission. (For further instructions on proffers, see *IIM LD-189*). The land surveyor of record is responsible for computing and entering the “Area” information on Right of Way Data sheet.

Deleted Information*

* Rev. 1/19

This sheet must be kept current by making the changes indicated by the Right of Way Division. Changes made subsequent to submission of approved Right of Way plans will be considered "formal" revisions. The Preliminary Right of Way Data Sheet will be used beginning at field inspection and will become the "Final* Right of Way Data Sheet."

Right of Way Division's Building Data Report will be furnished to the Designer ninety days prior to advertisement. This report will confirm regular demolition numbers (D-1, D-2, etc.) as well as furnish special "D" series numbers for any underground storage tanks, "non-significant" signs or real personal property on the project (*See Page 2F-1, PARCEL NUMBERS AND DEMOLITION NUMBERS ON PLANS).*

TYPICAL SECTION SHEET(S)

(See *Chapter 2H, Figure 2H-16 & 2H-17)*

All applicable typical sections (mainline, connections, auxiliary lanes, acceleration lanes, deceleration lanes, CD roads, transition areas for either the addition or subtraction of lanes and ramps (all ramps with differing geometric characteristics such as loops, spurs, flyovers and direct connections), bikeways, frontage roads, etc.) are to be shown as a half section cut and half section fill, where applicable.

Dimensions are generally shown below the typical section with the first line showing dimensions of pavement, shoulder, recoverable area, ditch, curb and gutter, buffer strip, sidewalk space, etc., widths. The second line generally shows the roadway width.

Station to station for each typical section is to be shown beneath the dimension lines. Pavement and shoulder transitions widths are to be shown at begin and end stations. The stations are to be broken for various projects and contracts.

The construction baseline is to be shown and labeled and the point of finished grade is to be clearly labeled with an arrow to the actual point.

If necessary (due to dual lanes, etc.), show existing roadway in dashed lines and label clearly. The existing baseline is to be depicted and labeled.

All slopes (pavement, shoulder, recoverable area, sidewalk space, side slopes, etc.) are to be shown immediately above the applicable line with arrows directed down grade to the slope. Pavement cross slopes for concrete and high type flexible pavement are to be normal crown (2%) from the inside edge of pavement to the outside edge of pavement for each two-lane section of all four-lane divided highways in tangent sections. Shoulder and ditch slopes are to conform to Design Guidelines (See *Appendix A1*). Sidewalk or sidewalk space slopes are generally to be 2%. Side slopes, unless specifically

* Rev. 1/11

recommended otherwise, are to conform to "CS" Standards for the particular roadway classification. (For definition of “Normal Crown”, see *Chapter 1B*). *

Pavement courses are to be shown in accordance with the latest recommendations. If preliminary recommendations are used, this is to be brought to the attention of the field inspection party with the understanding that the pavement design will be updated accordingly once the soil survey and final pavement design recommendations have been received.

Pavement courses, prime coats, incidentals, etc., are to be denoted with a number within a circle with a line to the denoted item. A legend is to be shown on each typical section sheet with complete descriptions of each item.

The depths of the various courses will be shown in an enlarged section, if necessary, to show detail.

Applicable project numbers (right of way and construction) are to be shown in the proper blocks. The names and phone numbers, including area code, and District, if applicable, of the following persons are to be shown in the upper left corner: Project Manager: (VDOT), Surveyed By: (L&D Survey Office Manager or Consultant Survey

Project Manager), Design Supervised By: (Design Engineer in Responsible Charge) and Designed By (Designer)

Symbols are to be used to provide an obvious delineation of the courses. Pavement courses are to be shown in accordance with the *CADD Manual*.

Ultimate sections are to be shown and clearly noted and delineated where applicable.

When placing and rolling flexible pavements, it is impossible to construct sides in a vertical plane without using forms. To make our drawings more realistic, show the side slopes at 1:1 as shown below. Do not denote the slope or the horizontal dimension on the Typical Section. When computing quantities, no adjustment is to be made.

Projects without paved shoulders require a 1 foot wide "wedge" in accordance with *IIM LD-158*.

Typical Method of Grading Subsurface Material at High Side of Superelevated Curves with Shoulders Graded in Accordance with St'd. GS-11.

* Rev. 1/17

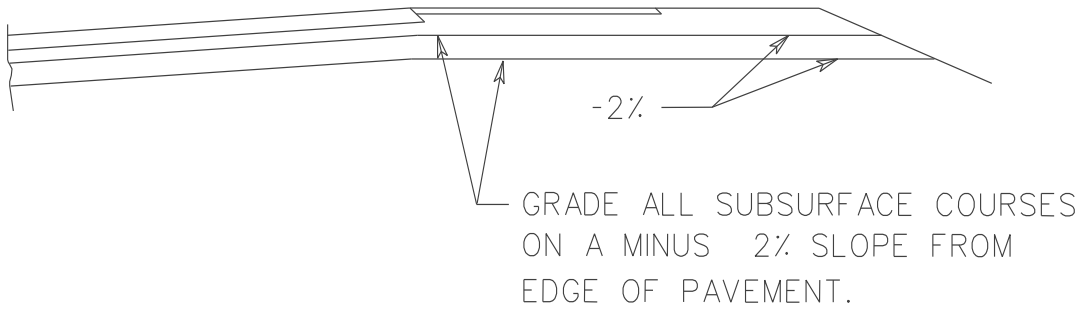

FIGURE 2E-24 GRADING LINE BELOW PAVEMENT*

Bottom line of grading below pavement is to be parallel to pavement slope.

HYDROLOGIC DATA SHEET

(See *Chapter 2H, Figure 2H-7* & Figure 2E-25)

A Hydrologic Data Sheet is to be included in each applicable set of plans. The blank sheet is available in the Insertable Sheet directory. The drainage designer will furnish the project designer the data needed to fill in the Hydrologic Data Sheet at field inspection stage and again upon final completion of the drainage design. The project designer shall check with the drainage designer at this time to verify that the required water level information is shown on the profile sheets of the roadway plans.

* Added 10/20

HYDROLOGIC DATA

The data presented herein was statistically derived by empirical methods and from field observations. It is presented as an estimate of the hydraulic performance of these facilities during the passage of actual flood events.

1. Estimated 100 year frequency flood data (unless otherwise noted.) This magnitude of flooding may pass through the proposed facility or it may obtain the necessary hydraulic conveyance by partial inundation of roadways and/or partial by pass of the facility.

2. Specified frequency flood data. It is anticipated that this magnitude of flooding will be conveyed through the proposed hydraulic facility under estimated conditions which satisfy the design criteria applicable to the site.

3. This data was obtained from observations by persons familiar with the area and/or official records combined with an evaluation by empirical methods. The reliability of this data is relative to the accuracy of the source. A future flood of the same magnitude may achieve a significantly different stage elevation from that shown due to changes in the physical characteristics of the watershed.

FIELD INSPECTION STAGE ☐ FINAL DESIGN STAGE ☐

					BASE FLOOD 1.		DESIGN FLOOD 2.			OVERTOPPING FLOOD		HISTORICAL DATA 3.		
Sheet No.	Station	Stream Name	Drainage Area	Structure Size	Discharge (C.F.S.)	Stage Elevation (Ft.)	Discharge (C.F.S.)	Estimated Exceedance Probability %	Stage Elevation (Ft.)	Stage Elevation (Ft.)	Estimated Exceedance Probability %	Date	Stage Elevation (Ft.)	Estimated Exceedance Probability %

REMARKS Source of Information and Other Related Data

FIGURE 2E-25* SAMPLE HYDROLOGIC DATA SHEET FOR NO PLAN PROJECT

* Rev 10/20

DESIGN FEATURES NOTE

A "Design Features" note is to be shown on all sheets, except cross sections:

DESIGN FEATURES RELATING TO CONSTRUCTION OR TO REGULATION AND CONTROL OF TRAFFIC MAY BE SUBJECT TO CHANGE AS DEEMED NECESSARY BY THE DEPARTMENT.

On the title sheet, the note is to be shown in the lower left corner as previously discussed in Section 2E.6-PREPARATION OF SUPPLEMENTAL SHEETS under "Notes".

On all other sheets, the note is to be shown to the left of the project identification block that is located in the upper right corner of the sheet. (See *Chapter 2H, Figure 2H-31*[*]).

ADDITIONAL NOTES

The following notes are to be added to all plan and profile sheets including the title and detail sheets; “F. I. PLANS” and “THESE PLANS ARE UNFINISHED AND UNAPPROVED AND ARE NOT TO BE USED FOR ANY TYPE OF CONSTRUCTION OR THE ACQUISITION OF RIGHT OF WAY.”

[*] Rev. 1/15

SECTION 2E.7 CONSTRUCTION COST ESTIMATE

ESTIMATING QUANTITIES – PREPARATION OF ESTIMATE

Approximate construction quantities are computed at this stage for use in preparing project cost estimates.

Quantities for drainage (and minor structure excavation), pavement and incidental items as depicted on plans or work sheets, and total regular excavation and borrow or embankment quantities, along with estimated mobilization, clearing and grubbing, field offices, etc., are included in the project cost estimate. For method in computing quantities see *Section 2G.2-SUMMARY SHEETS*.

Other standard items are to be reviewed and shown, if applicable, in accordance with the *Road and Bridge Standards*, *Instructional and Informational Memoranda*, and the *Road and Bridge Specifications*. In the event that an unusual or unique situation arises, a request is to be made to the *Standards and Special Design Section* for preliminary design and cost.

When the estimate is received, a copy is to be sent to the Federal Programs Management* Division with the construction cost noted for field inspection stage. This applies to projects to be constructed with other than Urban or Secondary funds. For both Urban-funded projects and Secondary projects, a copy is to be sent to the Local Assistance Division. The estimate is to be entered into the PCES data bank.

A copy of the project cost estimate is kept in the appropriate file and the total cost is noted on the office copy of the field inspection prints for quotation at the inspection.

When not in use, cost estimates are to be placed in secure files and not left lying around for casual observation or possible copying by someone.

Cost Estimates made available outside of this division, such as to the Federal Programs Management Division, the news media, etc., are the "total dollar cost" and are generally rounded off to the nearest thousand dollars. The construction cost estimate includes mobilization, construction engineering and contingencies.

All project cost estimate information is available to the public, except that which is protected by the Code of Virginia.

Project cost estimates at Field Inspection Stage should be based on quantities and run through Trns.port, then uploaded to PCES

* Rev. 7/15

SECTION 2E.8 CONSTRUCTABILITY QUALITY REVIEW

CONSTRUCTABILITY QUALITY REVIEW

Constructability review is defined as the review of plans, specifications, and contract documents from a construction perspective to assure the documents propose an operation that is efficient, cost effective, and buildable. Its emphasis is primarily focused on “how” the documents propose the operation to be built and not on “what” gets built.

AASHTO defines constructability review as “a process that utilizes construction personnel with extensive construction knowledge early in the design stages of projects to ensure that the projects are buildable, while also being cost-effective, biddable, and maintainable”.

This analysis is normally performed at the Preliminary Field Inspection, Public Hearing, Field Inspection and Pre-Advertisement stage of plan development. Additional reviews can be performed as needed when the plans are further developed.

The constructability review includes the report of findings, a completed checklist, and cost savings report. This report is a detailed tabulation of any anticipated savings identified during the review. The Scheduling & Contract Division or its project team member will conduct the constructability review.

SECTION 2E.9 DISTRIBUTION OF FIELD INSPECTION PLANS

See Project Management Online Guide *

PLAN ASSEMBLY

The following is a general guideline of items to be included in the field inspection plan assembly and additional items may be required at times:

1. VDOT standard plan, profile and cross section sheets must be used (no rolls);

2. The title sheet should have a project layout with individual plan sheets indicated, a project description (must agree with iPM description), the traffic data and functional classification block completely filled in, and a length tabulation for project numbers at bottom center;

3. Project location map sheet showing the project limits;

4. Right of way data sheet (blank);

5. Index of Sheets

6. Survey Data Sheet (horizontal survey alignment, reference data and bench marks);

7 Maintenance of traffic and sequence of construction sheets;

8. General Note Sheet with specific general notes for project;

9. Typical section sheets - mainline and all connections;

10. Underground utilities test hole information sheet;

11. Plan sheets (Nos. 3, 4, 5, 6, 7, etc.) must show:

    a. Complete survey - topo, right-of-way, property lines, existing drainage elevations, invert elevations of existing sanitary manholes property owners, underground utilities, etc.;

    b. Proposed horizontal alignment - bearings, curve data, superelevation, design speed;

* Rev. 7/08

c. Proposed right-of-way and easements - Show adequate right-of-way or permanent easements for all proposed permanent drainage items;

d. Proposed construction baseline, edge of pavements, medians, curbs, curb and gutter, sidewalk, construction limits, guardrail, etc.;

e. Proposed private entrances and tie-in points, grades are to be shown on profile sheets;

f. All required items should be labeled - St'd. CG-6 Req'd., St'd. MS-2 Req'd., St'd. CG-9D Req'd., St'd. RW-2 Req'd., etc.;

g. Required drainage - all pipes, drop inlets, end sections, etc., drawn to scale, complete drainage descriptions including elevations; Ditch typical sections should be shown for all nonstandard ditches;

h. Required erosion control items.

i. Tentative traffic control devices structures.

j. Tentative sound wall locations.

k. Tentative bridge design.

12. Profile sheet (Nos. 3A, 4A, 5A, 6A, 7A, etc.) must show:

    a. Existing profile;

    b. Proposed grades - gradient percent, vertical curves, vertical sight distances, design speeds;

    c. Proposed grades for all private entrances;

    d. Drainage descriptions (required or existing) are <u>not</u> to be shown on profile sheets;

13. Cross sections with proposed design templates - mainline and connections; Show all proposed ditches with grade elevations;

14. Insertable Sheets;*

15. Completed computer estimate forms are needed at this time.

* Rev. 7/16

SECTION 2E.10 FIELD INSPECTION

HOLDING FIELD INSPECTION

See *Project Management Online Guide* *

SAFETY ITEMS AND SEQUENCE OF CONSTRUCTION

The safety of motorists, pedestrians, and construction workers during roadway construction must be carefully considered by the designer during the development of the road plans.

Safety during construction, sequence of construction, and maintenance of traffic are so closely related that they should be considered as one element.

The Virginia Work Area Protection Manual (See *IIM LD- 93*) is to be used as a reference to determine if barricades or channelizing devices need to be included in the contract plans.

In addition to determining the need for barricades and/or detours, the designer is to review the plans carefully for the possibility of shifting traffic lanes away from the normal position during construction. If this operation is necessary to construct the project, a sequence of construction is to be considered by the designer in conjunction with the appropriate Assistant Construction Engineers and/or appropriate Assistant District Engineer. See *IIM-LD-241* "Work Zone Safety/ Mobility" for additional information

The Local Assistance Division, Asset Management Division, Structure and Bridge Division, and Traffic Engineering Division should be consulted on projects in their respective area of responsibility. The sequence of construction is to include diagrams and appropriate notes to inform the contractor as to how this operation is to be accomplished and advise of traffic problems that may be encountered. These shifts in traffic flows are to be designed to conform to the geometrics shown in the standards for detours (St'd. GS-10) and/or as indicated in the "Safety Guidelines for Construction Zones" (See *IIM-LD-93*).

When a sequence of construction plan is considered necessary, it shall be included in the plans that are distributed for review at the Field Inspection and it shall be of sufficient detail to present the basic concept and to reflect environmental, traffic, safety, and right of way requirements.

A copy of the sequence of construction plan with the accepted Preliminary Field Inspection recommendations incorporated is to be furnished to the Traffic Engineer prior to the public hearing/right of way stage. If detours and/or right of way (including easements) will be required for the maintenance of traffic, the sequence of construction must be completed in sufficient detail for the right of way requirements to be incorporated into the public hearing right of way plans.

---

* Rev. 7/08

Where a sequence of construction plan is considered unnecessary for a particular project, the file shall be documented accordingly with the listing of the names of those involved in the decision and the reasons for the decision.

The Field Inspection prints must also indicate that a sequence of construction plan is not necessary and that only such items as flagging, warning lights, etc., will be required.

All of the above items are to be discussed thoroughly at the Field Inspection and recommendations included in the Field Inspection Report.

REQUEST FOR SPECIAL DESIGN DRAWINGS

After the Field Inspection questions have been resolved, requests shall be made to the *Standards and Special Design Section*, to prepare the necessary special design roadway drawings for inclusion in the plans. This process is explained in *Section 2G.1-FINALIZING PLANS of this manual.*

If circumstances dictate a change in the plans that would alter or eliminate the need for a special drawing that is in the process of being prepared, the *Standards and Special Design Section* is to be notified immediately.

.

REQUEST FOR SOUND BARRIER WALL DESIGNS

Sound Barrier Wall requirements for location and profile elevations are determined by the Environmental Division who will provide the roadway designer with the requirements. An explanation of this procedure is in Chapter 2E-3-DETAILED PLAN DESIGN of this manual.

BRIDGES

When Field Inspections are held on projects involving new or existing bridges, particular attention must be paid to all discussions concerning these structures. The Structure and Bridge Division shall be notified of any decisions affecting a bridge design. A copy of the Field Inspection Report and any other applicable correspondence must be forwarded to them.

Deleted Information*

* Rev. 1/08

SECTION 2E-11 REQUEST FOR ADDITIONAL SURVEY DATA

PROCEDURE FOR REQUEST

Necessary additional survey data is to be requested after the field inspection. A list of all additional survey needed is to be kept during plan development. Unless certain information is critical for plan development before this time, all items are to be held until one request for data can supply all information needed. Survey data is to be requested using Form *LD-261*.

The designer should check on site plan construction, and request additional survey for that portion of site plan affecting project design, when construction is completed or near completion.

SECTION 2E.12 DISTRIBUTION OF PRINTS

PROCEDURE

Whenever major changes occur as a result of the field inspection and/or Design or Combined Location and Design Public Hearing, such as interchange configuration, intersection design, etc., distribution is to be made in accordance with *Project Management Manual, PMO-7.2.*[*]

[*] Rev. 7/16

SECTION 2E.13 UTILITY FIELD INSPECTION

GENERAL

After Field Inspection recommendations have been resolved and incorporated into the plans, and the designer has evaluated any applicable test hole data (See VDOT *Survey Manual*, Chapter 13) prints are to be submitted for Utility Field Inspection. Include the test hole data sheet and any available preliminary plans for bridges, retaining walls, traffic signals and lighting. (See *Project Management Manual, PMO-7.2.*[*])

The Regional Utility Coordinator, or a representative, shall conduct the Utility Field Inspection. On complex projects, the In-Plan Utility Engineer and Roadway Engineer may be requested to attend the Utility Field Inspection in order to provide an explanation of the design requirement. A Utility Field Inspection Report will be prepared with a copy to the Location and Design Engineer.

As soon as practicable after the Utility Field Inspection, the Regional Utility Coordinator shall obtain replacement utility easement requirements from the affected utility companies. After review and approval of the utility easements, the Regional Utility Coordinator shall transmit marked prints to the Project Manager in charge of the project for addition to the Right of Way plans. The necessary utility easements shall be shown in accordance with Section 2E.5 -"UTILITY EASEMENTS".

The Utility Field Inspection Report will indicate which utility relocations will be placed in the highway contract. Usually a separate set of utility adjustment plans will be prepared and made a part of the project assembly. Electronic files on roadway base plan and/or profiles will be made available to the Utility Section for use in designing the utility adjustment plans.

[*] Rev. 7/16