CHAPTER 4
INSTALLATION OF PIPE AND TESTING OF PIPE BACKFILL

Why talk about pipe in a Soils and Aggregate School?

- **Pipe-soil interaction is critical to successful performance of system**
- **Treatment of soils adjacent to pipes is different than normal placement of embankment**
- **Pipes must be adequately protected by soils, prior to allowing construction traffic**

RIGID AND FLEXIBLE PIPE

Rigid Pipe: <2% Deflection
Carries almost all the load

Flexible Pipe: >2% Deflection
Transfers load to surrounding soil

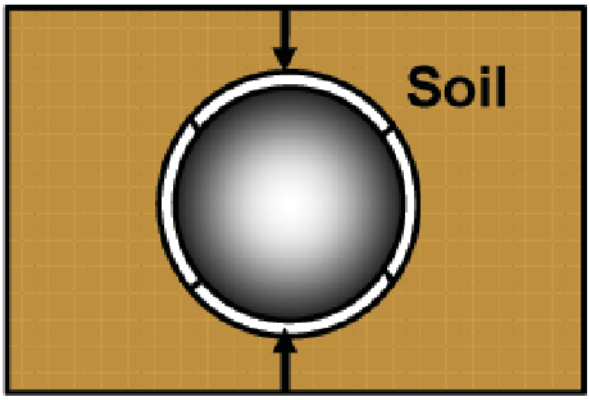

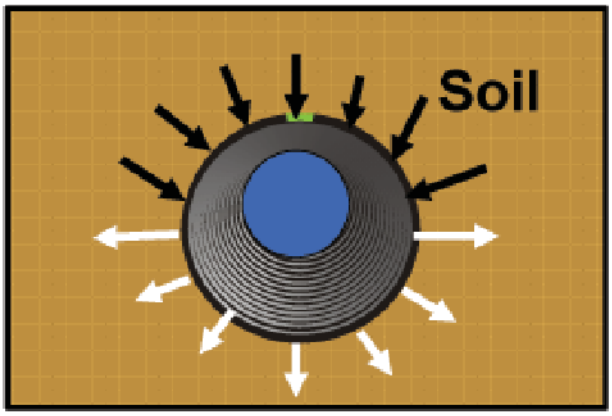

PIPE CONSTRUCTION CHECKLIST

1. Pre-Construction
   a. Verify Pipe
   b. Pipe Handling and Storage
   c. Minimum/Maximum Height of Cover
2. During Construction
   a. Excavation
   b. Foundation
   c. Elevation
   d. Joints
   e. Connections to Structures
   f. Backfill
3. Post Construction
   a. Inspection and Quality Assurance

VERIFYING PIPE

Verify that the correct pipe has been delivered for the applications on your project.

1. Metal pipe gauge
   - Examples – 12, 14, 16
2. Metal pipe corrugation dimensions
   - Examples – 2 2/3″ x ½″; 3″ x 1″
3. Concrete pipe strength
   - Examples – Class III, IV or V
4. pH and Resistivity - needs to be known by designer
5. Maximum height of cover
   - Maximum height for each type of pipe must be given
   - Compare information from drainage summary with maximum cover chart for pipe to be used
   - Check standards for minimum height of cover

Measuring Corrugation Dimensions

2 2/3″ x ½″

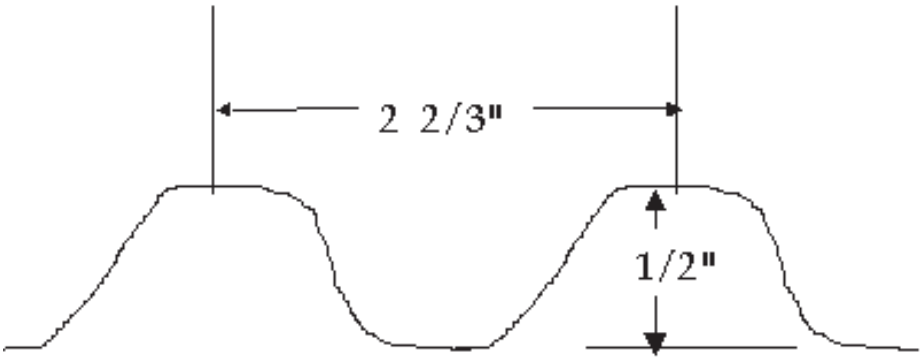

TABLE A1 - ALLOWABLE TYPE OF STORM SEWER PIPE

FOR ROADWAYS THAT ARE CONSTRUCTED, FUNDED OR WILL ULTIMATELY BE MAINTAINED BY VDOT

FUNCTIONAL CLASSIFICATION OF ROADS SYSTEM UNDER WHICH PIPE IS TO BE INSTALLED

	HIGHER FUNCTIONAL CLASS - HFC RURAL PRINCIPAL ARTERIAL, URBAN PRINCIPAL ARTERIAL, RURAL MINOR ARTERIAL, URBAN MINOR ARTERIAL, RURAL COLLECTOR ROADS, URBAN COLLECTOR STREETS, SUBDIVISION STREETS WITH AN ADT GREATER THAN 4000	LOWER FUNCTIONAL CLASS - LFC RURAL LOCAL ROADS, URBAN LOCAL STREETS, SUBDIVISION STREETS WITH AN ADT LESS THAN OR EQUAL TO 4000	
ALLOWABLE PIPE CULVERTS NOTES 1 & 2	STATEWIDE	STATEWIDE EXCEPT LOCATIONS SHOWN IN TABLE B	LOCATION SHOWN IN TABLE B
CONCRETE	✓	✓	✓
CORRUGATED STEEL ALUMINUM COATED TYPE 2 FULLY CONCRETE LINED NOTE 3		✓	
ALUMINUM COATED TYPE 2 STEEL SPIRAL RIB NOTE 3		✓	
POLYMER COATED (10/10) CORRUGATED STEEL SPIRAL RIB NOTE 3		✓	✓
POLYMER COATED (10/10) CORRUGATED STEEL DOUBLE WALL (SMOOTH INTERIOR) NOTE 3	✓	✓	✓
ALUMINUM SPIRAL RIB NOTE 3		✓	✓
POLYVINYLCHLORIDE (PVC) RIBBED PIPE (SMOOTH INTERIOR)	✓	✓	✓
POLYETHYLENE (PE) CORRUGATED TYPE S	✓	✓	✓

TABLE B

EXCEPTIONS TO STATEWIDE APPLICATIONS

COUNTIES (INCLUDING TOWNS)				CITIES	
ARLINGTON - EAST OF AND INCLUDING RTES. 95 & 395		SURRY - EAST OF AND INCLUDING RTE. 10		SUFFOLK - EAST OF AND INCLUDING RTE. 32	
FAIRFAX - EAST OF AND INCLUDING RTES. 95 & 395		ISLE OF WIGHT - EAST OF AND INCLUDING RTE. 10		CHESAPEAKE	WILLIAMSBURG
PRINCE WILLIAM - EAST OF AND INCLUDING RTES. 95 & 395				VIRGINIA BEACH	POQUOSON
WESTMORELAND	JAMES CITY	ESSEX	NORTHAMPTON	HAMPTON	PORTSMOUTH
LANCASTER	ACCOMACK	MIDDLESEX	STAFFORD	NEWPORT NEWS	
MATTHEWS	SPOTSYLVANIA	YORK	KING GEORGE	NORFOLK	
GLOUCESTER	NORTHUMBERLAND	RICHMOND		ALEXANDRIA	
				FREDERICKSBURG	

TABLE C

PIPE TYPE	ALLOWABLE pH RANGE (SEE NOTE 6)		ALLOWABLE RESISTIVITY RANGE		ALLOWABLE VELOCITY (FPS) (SEE NOTE 5)
	MIN.	MAX.	MIN.	MAX.	MAXIMUM
ALUMINUM COATED TYPE 2 CORRUGATED STEEL	5.0	9.0	1500	-	5
GALVANIZED STEEL STRUCTURAL PLATE WITH CONCRETE INVERT	6.0	9.0	2000	10000	15
GALVANIZED STEEL STRUCTURAL PLATE	6.0	9.0	2000	7000	5
POLYMER COATED (10/10) CORRUGATED STEEL	4.0	9.0	750	-	15
UNCOATED GALVANIZED CORRUGATED STEEL	6.0	10.0	2000	7000	5
CORRUGATED ALUMINUM ALLOY	4.0	9.0	500	-	5
CORRUGATED ALUMINUM ALLOY STRUCTURAL PLATE	4.0	9.0	500	-	5
ALUMINUM SPIRAL RIB	4.0	9.0	500	-	5
ALUMINUM COATED TYPE 2 SPIRAL RIB	5.0	9.0	1500	-	5
CORRUGATED STEEL ALUMINUM COATED TYPE 2 FULLY CONCRETE LINED	5.0	9.0	1500	-	15
POLYMER COATED CORRUGATED STEEL SPIRAL RIB	4.0	9.0	750	-	15
POLYMER COATED CORRUGATED STEEL DOUBLE WALL	4.0	9.0	750	-	15

NOTES:

1. ALLOWABLE TYPES OF PIPES FOR A SPECIFIC AREA ARE TO CONFORM TO THE CRITERIA SHOWN IN TABLES A, A1, B, AND C. ANY DEVIATION MUST BE APPROVED BY THE STATE LOCATION AND DESIGN ENGINEER AND THE DISTRICT MATERIALS ENGINEER.
2. SEE HEIGHT OF COVER TABLES FOR MINIMUM AND MAXIMUM COVER LIMITATIONS FOR EACH TYPE OF PIPE.
3. SEE TABLE C FOR MINIMUM AND MAXIMUM pH, RESISTIVITY, AND VELOCITY LIMITATIONS FOR METAL PIPES.
4. USE ONLY UNDER ENTRANCES WHERE THE PIPE SIZE IS LESS THAN OR EQUAL TO 30" DIAMETER (OR EQUIVALENT) AND THE HEIGHT OF COVER IS LESS THAN OR EQUAL TO 15' AND AS AN OUTLET PIPE FOR STANDARD DI-13 SHOULDER SLOT INLETS.
5. ALLOWABLE VELOCITY WHERE ABRASIVE BEDLOAD IS PRESENT OR ANTICIPATED. MAXIMUM VELOCITY BASED ON 10 YEAR DESIGN DISCHARGE (Q).
6. pH VALUES APPLY TO BOTH THE SOIL AND WATER.

SPECIFICATION REFERENCE	ALLOWABLE PIPE CRITERIA FOR CULVERT AND STORM SEWERS	VDOT ROAD AND BRIDGE STANDARDS
232 302	VIRGINIA DEPARTMENT OF TRANSPORTATION	REVISION DATE / SHEET 18 OF 18 / 107.22

PC-1

DIAMETER INCHES	AREA SQ. FT.	MAXIMUM HEIGHT OF COVER IN FEET				DIAMETER INCHES
		NONREINFORCED CONCRETE (STRENGTH) (SEE NOTE 4)	REINFORCED CONCRETE CLASS			
			III	IV	V	
12	0.8	14' (1800)	14'	19'	29'	12
15	1.2	14' (2125)	14'	19'	29'	15
18	1.8	14' (2400)	14'	20'	29'	18
21	2.4	13' (2700)	14'	20'	29'	21
24	3.1	13' (3000)	14'	20'	29'	24
27	4.0		14'	20'	29'	27
30	4.9		14'	20'	29'	30
33	5.9		14'	20'	29'	33
36	7.1		14'	20'	30'	36
42	9.6		14'	21'	30'	42
48	12.6		14'	21'	30'	48
54	15.9		14'	21'	30'	54
60	19.6		14'	21'	30'	60
66	23.8		14'	21'	30'	66
72	28.3		14'	21'	30'	72
78	33.2		14'	21'	30'	78
84	38.5		14'	21'	30'	84
90	44.4		14'	21'	30'	90
96	50.3		14'	21'	30'	96
102	56.7		14'	21'	30'	102
108	63.6		14'	21'	30'	108

NOTES:

1. COVER HEIGHTS INDICATED IN TABLES ARE FOR FINISHED CONSTRUCTION.
2. TO PROTECT PIPE DURING CONSTRUCTION, MINIMUM HEIGHTS OF COVER PRIOR TO ALLOWING CONSTRUCTION TRAFFIC TO CROSS INSTALLATION ARE TO BE ½ DIAMETER OR 3'0", WHICHEVER IS GREATER. THE COVER SHALL EXTEND THE FULL LENGTH OF THE PIPE. THE APPROACH FILL RAMP IS TO EXTEND A MINIMUM OF 10(DIAMETER + 36") ON EACH SIDE OF THE PIPE, OR TO THE INTERSECTION WITH A CUT.
3. STANDARD MINIMUM FINISHED HEIGHT OF COVER FOR ALL PIPES, EXCEPT THOSE UNDER ENTRANCES, SHALL BE 2.0' OR ½ DIAMETER, WHICHEVER IS GREATER. IN CASES IN WHICH THESE COVER HEIGHTS CANNOT BE ACHIEVED, AN ABSOLUTE MINIMUM FINISHED COVER HEIGHT OF 1.0' WILL BE ALLOWED ONLY IF ALL POSSIBLE MEANS TO OBTAIN THE STANDARD VALUE HAVE BEEN EXHAUSTED. THE MINIMUM FINISHED HEIGHT OF COVER FOR PIPES UNDER ENTRANCES IS 9".
4. CRUSHING STRENGTH (POUNDS PER LINEAR FOOT ULTIMATE STRENGTH)
5. FOR HEIGHT OF COVER GREATER THAN THAT SHOWN FOR CLASS V, A SPECIAL DESIGN CONCRETE PIPE IS REQUIRED.
6. NONREINFORCED PIPE TO BE USED ONLY UNDER ENTRANCES AND LOWER FUNCTIONAL CLASSIFICATION (LFC) ROADWAYS (SEE SHEET 17 OF 18).
7. SEE STANDARD PB-1 FOR PIPE BEDDING AND BACKFILL REQUIREMENTS.
8. PIPE WITH LESS THAN THE STANDARD MINIMUM COVER IS TO BE MINIMUM CLASS III REINFORCED.

VDOT
ROAD AND BRIDGE STANDARDS

SHEET 1 OF 18 | REVISION DATE
107.05

CONCRETE PIPE
HEIGHT OF COVER TABLE FOR H-20 LIVE LOAD

VIRGINIA DEPARTMENT OF TRANSPORTATION

SPECIFICATION REFERENCE
302
232

PC-1

CORRUGATED STEEL PIPE
2 2/3" x 1/2" CORRUGATIONS

PIPE DIAMETER INCHES	AREA SQ. FT.	MAXIMUM HEIGHT OF COVER IN FEET — SHEET THICKNESS IN INCHES (GAUGE)					MINIMUM SHEET THICKNESS FOR ENTRANCE PIPES WITH LESS THAN 1 FT COVER INCHES (GAUGE)
		0.064 (16)	0.079 (14)	0.109 (12)	0.138 (10)	0.168 (8)	
12	0.79	18	100				0.064 (16)
15	1.23	18	80	100	100		0.064 (16)
18	1.77	18	55	71	89	94	0.064 (16)
21	2.40	18	41	51	62	74	0.079 (14)
24	3.14	17	33	40	47	55	0.109 (12)
27	3.98	17	28	33	38	44	
30	4.91	17	25	28	32	36	
33	5.94	17	23	25	28	31	
36	7.1	16	21	23	26	28	
42	9.6	16	20	21	22	24	
48	12.6	15	19	19	20	21	
54	16.0		18	19	19	20	
60	19.6			18	19	19	
66	23.8				18	18	
72	28.3				18	18	
78	33.2					18	
84	38.5					17	

CORRUGATED STEEL PIPE
3" x 1" AND 5" x 1" CORRUGATIONS

PIPE DIAMETER INCHES	AREA SQ. FT.	MAXIMUM HEIGHT OF COVER IN FEET — SHEET THICKNESS IN INCHES (GAUGE)				
		0.064 (16)	0.079 (14)	0.109 (12)	0.138 (10)	0.168 (8)
36	7.1	16	38	47	57	66
42	9.6	16	30	36	42	48
48	12.6	15	26	30	34	38
54	16.0	15	23	26	28	31
60	19.6	14	21	23	25	27
66	23.8	14	20	22	23	25
72	28.3	13	19	20	22	23
78	33.2	13	19	20	21	21
84	38.5	12	18	19	20	21
90	44.2	12	18	19	19	20
96	50.3		18	18	19	19
102	56.7		18	18	18	19
108	63.6			18	18	18
114	70.9			18	18	18
120	78.5			17	18	18
132	95.0				17	18
144	113.0					17

NOTES:

1. COVER HEIGHTS INDICATED IN TABLES ARE FOR FINISHED CONSTRUCTION.
2. TO PROTECT PIPE DURING CONSTRUCTION, MINIMUM HEIGHT OF COVER TO BE IN ACCORDANCE WITH TABLE A PRIOR TO ALLOWING CONSTRUCTION TRAFFIC TO CROSS INSTALLATION. THE COVER SHALL EXTEND THE FULL LENGTH OF THE PIPE. THE APPROACH FILL RAMP IS TO EXTEND A MINIMUM OF 15 DIAMETERS ON EACH SIDE OF THE PIPE OR THE INTERSECTION WITH A CUT.
3. STANDARD MINIMUM FINISHED HEIGHT OF COVER FOR ALL PIPES, EXCEPT UNDER ENTRANCES, SHALL BE 2.0' OR 1/2 DIAMETER, WHICHEVER IS GREATER. IN CASES IN WHICH THESE COVER HEIGHTS CANNOT BE ACHIEVED, AN ABSOLUTE MINIMUM FINISHED COVER HEIGHT OF 1.0' OR 1/8 DIAMETER, WHICHEVER IS GREATER, WILL BE ALLOWED ONLY IF ALL POSSIBLE MEANS TO OBTAIN THE STANDARD VALUE HAVE BEEN EXHAUSTED. THE MINIMUM FINISHED HEIGHT OF COVER FOR PIPES UNDER ENTRANCES IS 9" FOR PIPE DIAMETERS LESS THAN OR EQUAL TO 24" AND 12" OR 1/8 DIAMETER, WHICHEVER IS GREATER, FOR PIPE DIAMETERS GREATER THAN 24". WHERE A POLYMER COATED PIPE WILL BE USED AND THE SURFACE OVER THE TOP OF THE PIPE WILL BE ASPHALT, CLASS I BACKFILL MATERIAL IS TO BE PLACED UP TO A MINIMUM OF 6" ABOVE THE TOP OF THE PIPE.
4. 16 GAUGE PIPE LIMITED TO THOSE LOCATIONS WHERE PIPE DIAMETER PLUS COVER IS LESS THAN 20'.
5. THE MAXIMUM HEIGHT OF COVER SHOWN IN THE COVER TABLES IS BASED ON A SOIL MODULUS OF 700 PSI. ALL OTHER DESIGN CRITERIA ARE IN ACCORDANCE WITH THE AASHTO SPECIFICATIONS AND VDOT MODIFICATIONS FOR SOIL CORRUGATED METAL STRUCTURE INTERACTION SYSTEMS.
6. SEE STANDARD PB-1 FOR PIPE BEDDING AND BACKFILL REQUIREMENTS.

TABLE A	
PIPE DIAMETER	MINIMUM COVER HEIGHT DURING CONSTRUCTION (SEE NOTE 2)
12" TO 30"	18"
36" AND ABOVE	1/2 DIAMETER

CONCRETE- LINED CORRUGATED STEEL PIPE
MAXIMUM HEIGHT OF COVER TO BE IN ACCORDANCE WITH THE TABLES BUT SHALL NOT EXCEED 30'.

VDOT
ROAD AND BRIDGE STANDARDS

SHEET 3 OF 18 | REVISION DATE
107.07

CORRUGATED STEEL PIPE
HEIGHT OF COVER TABLES FOR H-20 LIVE LOAD

VIRGINIA DEPARTMENT OF TRANSPORTATION

SPECIFICATION REFERENCE
302
232

PIPE MARKINGS

- Plant stamps pipe with date cast, size, lot number
- Plant QC Technician inspects pipe and affixes a QC stamp to the pipe

PIPE JOINTS

- Rigid pipe - properly fitted, sealed with rubber, preformed plastic, mastic gaskets, oakum & mortar or oakum & joint compound
- Flexible pipe - properly aligned and joined with approved coupling bands

PIPE HANDLING

- Do not pick up pipe by one end
- Use leather or nylon slings
- Use pipe fork for concrete Pipe
- Box culverts may have lift holes
- Pipe > 36″ have lift holes
- Pipe ≤ 36″ shall not have lift holes

PIPE STORAGE

- Out of the way
- Stacked and chocked
- Do not stack on bells

The following copied notes were included in projects beginning with the September, 1997 advertisement.

SECTION 232.02 (a) 1. CONCRETE PIPE FOR CULVERTS AND SEWERS of the Specifications is amended to replace the first paragraph with the following:

1. **Concrete pipe for culverts and sewers** shall be circular or elliptical in cross section, either plain concrete or reinforced concrete, and of the modified tongue-and-groove design in sizes up to and including 18 inches (450 millimeters) in internal diameter and either standard or modified reinforced tongue-and-groove in sizes above 18 inches (450 millimeters) in internal diameter. Pipe shall conform to the specified AASHTO requirements, except that pipe having an internal diameter of 36 inches (900 millimeters) or less shall be manufactured without lift holes. Pipe larger than 36 inches (900 millimeters) in internal diameter may be manufactured with lift holes provided the holes are created by molding, forming, coring or other methods to be cylindrical or conical in shape and are sufficiently smooth to permit plugging with an elastomeric or other approved plug type. 4-11-97

SECTION 302.03 PROCEDURES of the Specifications is amended to include the following:

When lift holes are provided in concrete pipe or precast box culverts, the Contractor shall install a lift hole plug furnished by the manufacturer in accordance with the requirements of Section 232.02(a)1. of the Specifications. After pipe installation and prior to backfilling, plugs shall be installed from the exterior of the pipe or box culvert and snugly seated. 4-11-97

Make sure there is adequate cover material over the pipe before construction traffic is allowed on it – minimum 3 feet

PB-1

NO PROJECTION OF PIPE ABOVE GROUND LINE

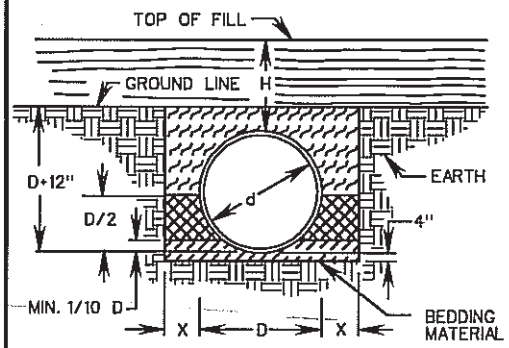

NORMAL EARTH FOUNDATION

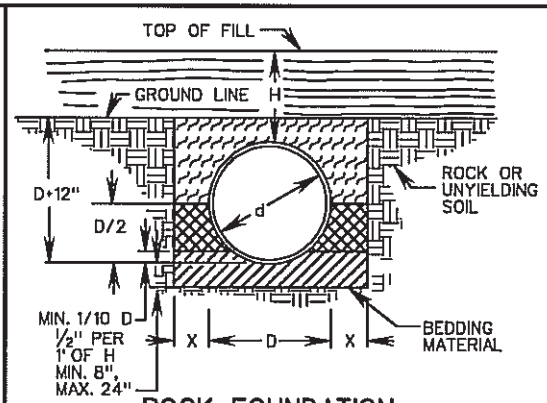

ROCK FOUNDATION

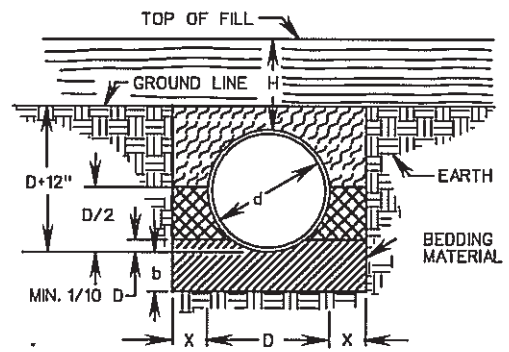

FOUNDATION SOFT, YIELDING, OR OTHERWISE UNSUITABLE MATERIAL

PIPE PROJECTION ABOVE GROUND LINE

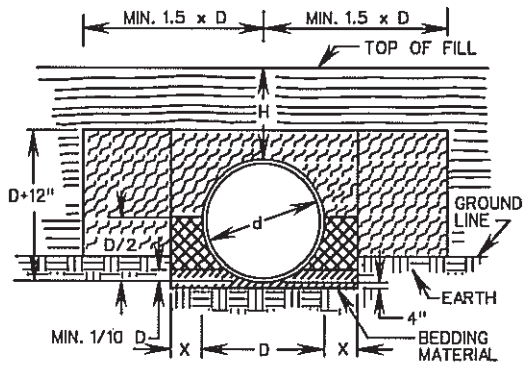

NORMAL EARTH FOUNDATION

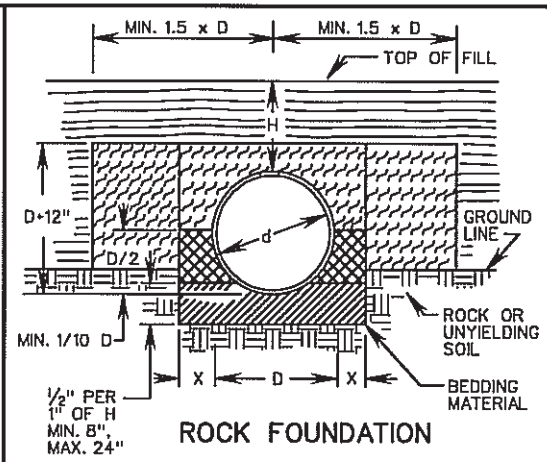

ROCK FOUNDATION

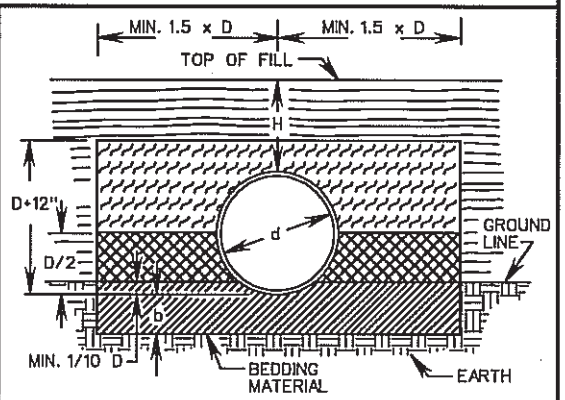

FOUNDATION SOFT, YIELDING, OR OTHERWISE UNSUITABLE MATERIAL

- BEDDING MATERIAL IN ACCORDANCE WITH SECTION 302 OF THE ROAD AND BRIDGE SPECIFICATIONS.
- CLASS I BACKFILL MATERIAL IN ACCORDANCE WITH SECTION 302 OF THE ROAD AND BRIDGE SPECIFICATIONS.
- REGULAR BACKFILL MATERIAL IN ACCORDANCE WITH SECTION 302 OF THE ROAD AND BRIDGE SPECIFICATIONS.
- EMBANKMENT

NOTES:

FOR PLASTIC PIPE, THE LIMITS OF THE CLASS I BACKFILL MATERIAL SHALL BE EXTENDED TO 12" ABOVE THE TOP OF THE PIPE.

FOR GENERAL NOTES ON PIPE BEDDING, SEE INSTALLATION OF PIPE CULVERTS AND STORM SEWERS GENERAL NOTES ON SHEET 107.00.

CRUSHED GLASS CONFORMING TO THE SIZE REQUIREMENTS FOR CRUSHER RUN AGGREGATE SIZE 25 AND 26 MAY BE USED IN PLACE OF CLASS I BACKFILL.

SHEET 1 OF 4

SPECIFICATION REFERENCE
302
303

INSTALLATION OF PIPE CULVERTS AND STORM SEWERS
CIRCULAR PIPE BEDDING AND BACKFILL - METHOD "A"

VIRGINIA DEPARTMENT OF TRANSPORTATION

REV 8/07

107.01

PB-1

NO PROJECTION OF PIPE ABOVE GROUND LINE

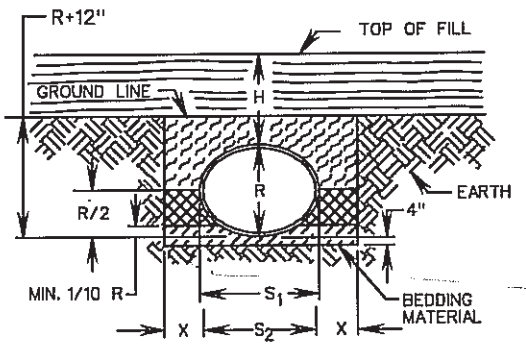

NORMAL EARTH FOUNDATION

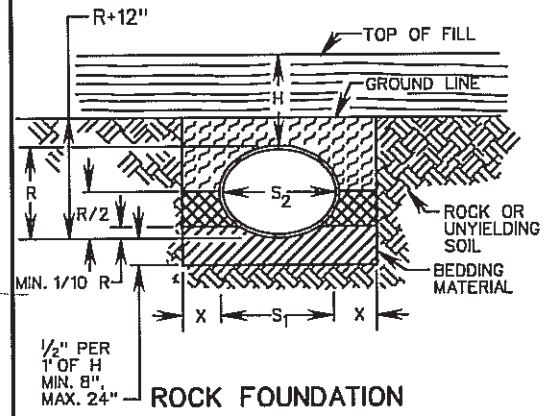

ROCK FOUNDATION

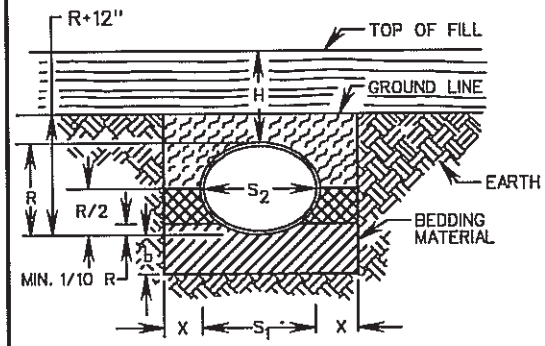

FOUNDATION SOFT, YIELDING, OR OTHERWISE UNSUITABLE MATERIAL

PIPE PROJECTION ABOVE GROUND LINE

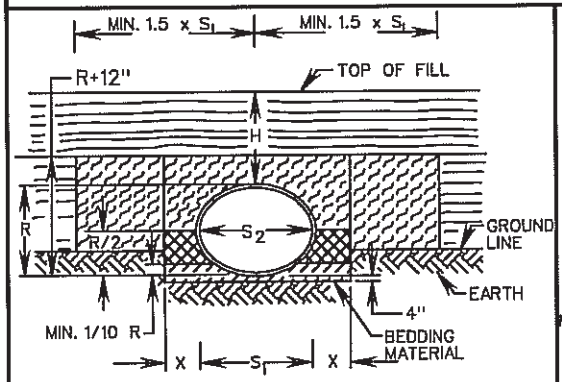

NORMAL EARTH FOUNDATION

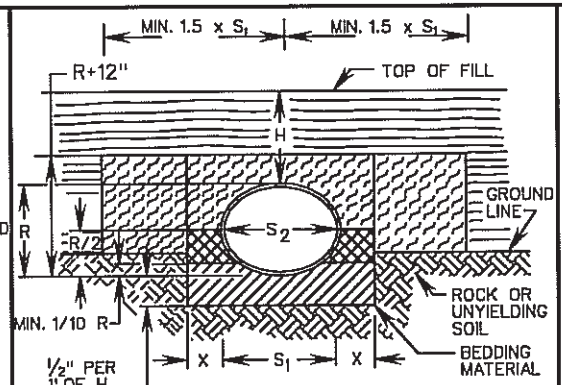

ROCK FOUNDATION

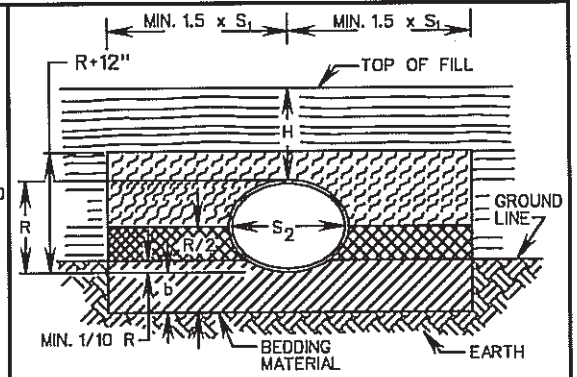

FOUNDATION SOFT, YIELDING, OR OTHERWISE UNSUITABLE MATERIAL

BEDDING MATERIAL IN ACCORDANCE WITH SECTION 302 OF THE ROAD AND BRIDGE SPECIFICATIONS.

CLASS I BACKFILL MATERIAL IN ACCORDANCE WITH SECTION 302 OF THE ROAD AND BRIDGE SPECIFICATIONS.

REGULAR BACKFILL MATERIAL IN ACCORDANCE WITH SECTION 302 OF THE ROAD AND BRIDGE SPECIFICATIONS.

EMBANKMENT

NOTES:

FOR GENERAL NOTES ON PIPE BEDDING, SEE INSTALLATION OF PIPE CULVERTS AND STORM SEWERS GENERAL NOTES ON SHEET 107.00.

CRUSHED GLASS CONFORMING TO THE SIZE REQUIREMENTS FOR CRUSHER RUN AGGREGATE SIZE 25 AND 26 MAY BE USED IN PLACE OF CLASS I BACKFILL.

SHEET 2 OF 4

INSTALLATION OF PIPE CULVERTS AND STORM SEWERS ELLIPTICAL PIPE BEDDING AND BACKFILL - METHOD "A"

VIRGINIA DEPARTMENT OF TRANSPORTATION

REF 8/07

107.02

SPECIFICATION REFERENCE
302
303

PB-1

NO PROJECTION OF PIPE ARCH ABOVE GROUND LINE

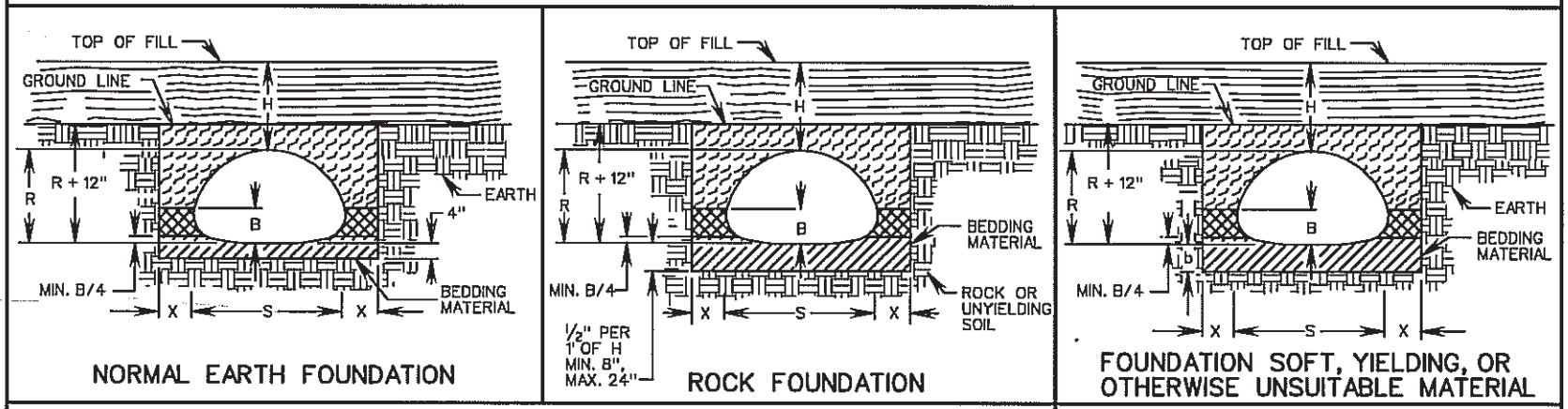

PIPE ARCH PROJECTION ABOVE GROUND LINE

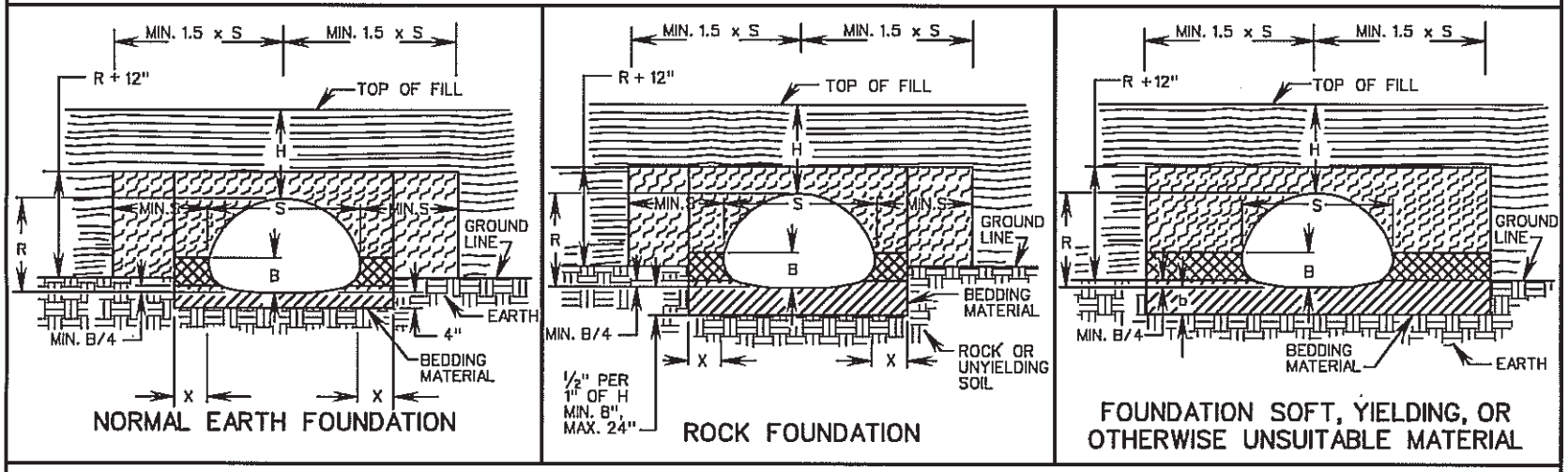

BEDDING MATERIAL IN ACCORDANCE WITH SECTION 302 OF THE ROAD AND BRIDGE SPECIFICATIONS.

CLASS I BACKFILL MATERIAL IN ACCORDANCE WITH SECTION 302 OF THE ROAD AND BRIDGE SPECIFICATIONS.

REGULAR BACKFILL MATERIAL IN ACCORDANCE WITH SECTION 302 OF THE ROAD AND BRIDGE SPECIFICATIONS.

EMBANKMENT

NOTE:

FOR GENREAL NOTES ON PIPE BEDDING, SEE INSTALLATION OF PIPE CULVERTS AND STORM SEWERS GENERAL NOTES ON SHEET 107.00.

CRUSHED GLASS CONFORMING TO THE SIZE REQUIREMENTS FOR CRUSHER RUN AGGREGATE SIZE 25 AND 26 MAY BE USED IN PLACE OF CLASS I BACKFILL.

SHEET 3 of 4

SPECIFICATION REFERENCE
302
303

INSTALLATION OF PIPE CULVERTS AND STORM SEWERS
PIPE ARCH BEDDING AND BACKFILL

VIRGINIA DEPARTMENT OF TRANSPORTATION

REV 8/07

107.03

PB-1

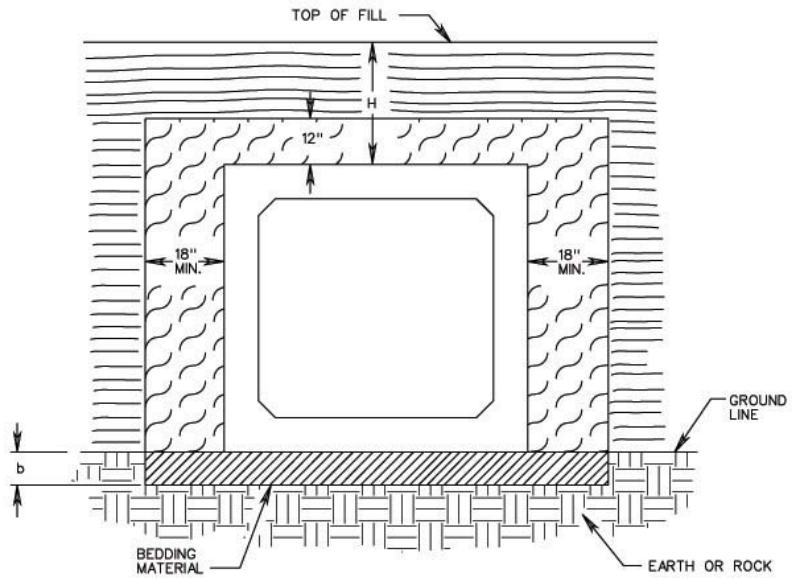

H - HEIGHT OF COVER MEASURED FROM TOP OF CULVERT TO FINISHED GRADE.

FOR NORMAL EARTH FOUNDATION:
FOR PRECAST AND CAST IN PLACE BOX CULVERT b - 6"

FOR ROCK FOUNDATION:
FOR PRECAST BOX CULVERT b - 1/4" PER 12" OF H - 8" MIN., 24" MAX.
FOR CAST IN PLACE BOX CULVERT b=DEPTH AS SHOWN ON PLANS OR WHERE NO BEDDING IS SPECIFIED BOTTOM SLAB TO BE KEYED INTO EXISTING ROCK FOUNDATION.
FOR SOFT, YIELDING OR OTHERWISE UNSUITABLE FOUNDATION:
FOR PRECAST AND CAST IN PLACE BOX CULVERT
b - DEPTH AS SHOWN ON PLANS OR TO FIRM BEARING SOIL.

BEDDING MATERIAL IN ACCORDANCE WITH SECTION 302 OF THE ROAD AND BRIDGE SPECIFICATIONS.

REGULAR BACKFILL MATERIAL IN ACCORDANCE WITH SECTION 302 OF THE ROAD AND BRIDGE SPECIFICATIONS.

EMBANKMENT

SHEET 4 OF 4

INSTALLATION OF BOX CULVERTS BEDDING AND BACKFILL - METHOD "A"

VIRGINIA DEPARTMENT OF TRANSPORTATION

NEW. 1/04

107.04

SPECIFICATION REFERENCE
302
303

EXCAVATION

- **Locate Utilities (MS Utilities)**
- **Determine Location (Stake Pipe)**
- **Begin Excavation**
- **PHYSICALLY Locate Utilities**
- **Excavate trench, keeping safety in mind**
  - **Sloped sides**
  - **Trench box placed no lower than top of pipe**

FOUNDATION

- **Explore Foundation**
- **Use PB – 1 Standard**
- **Bedding**
  Normal earth foundation - minimum 4″ bedding
  Rock foundation - 1/2″ per 1 foot of cover, minimum 8″, maximum 24″
- **Shape bedding to minimum 1/10 diameter of pipe**
- **Ensure bedding is uniform and follows grade level for bottom of pipe to ensure continuous support along barrel of pipe**
- **Middle of bedding equal to 1/3 outside diameter of pipe, loosely placed with remainder compacted to minimum 95% standard proctor density**
- **Begin pipe installation downstream**

Note: The foundation is to be explored below the bottom of the excavation to determine the type and condition of the foundation. The exploration should extend to a depth equal to 1/2″ per foot of fill height or 8″, whichever is greater. If it is a routine entrance or crossover pipe 12″ – 30″ in diameter that is to be installed under fills 15 feet or less in height, no exploration is needed. The Contractor shall report findings of foundation exploration to the Engineer for approval prior to placing pipe.

Foundation Materials for Pipes and Box Culverts

- **Crusher run aggregate size no. 25 and 26**
- **Crushed glass conforming to size requirements for crusher run aggr. size no. 25 and 26 may be used for pipe not box culverts**
- **When standing water is in pipe foundation area, #57 stone can be used as a backfill in the subfoundation**
    - **#57 stone MUST be capped with a minimum 4″ crusher run prior to placement of pipe or box culvert**
    - **Compaction testing on #57 stone is not required; seat stone in trench**

ELEVATION

- **Invert/Outlet Elevation**
- **Proper Length**
- **Camber Suggested when possible**
- **Camber Provided by Materials Division**

ENSURE LEAK-RESISTANT JOINTS - JOINING PIPE

Rigid pipe: The method of joining pipe sections is such that ends are fully entered and inner surfaces are reasonably flush and even.

Joints shall be sealed with any one or combination of the following to form a leak-resistant joint: rubber, preformed plastic, or mastic gaskets from the Department's approved list; oakum and mortar; oakum and joint compound; or cold-applied pipe joint sealer.

Rubber ring gaskets shall be installed to form a flexible, leak-resistant seal. Where oakum is used, the unit shall be caulked with this material and then sealed with mortar or joint compound.

Flexible pipe: Flexible pipe sections shall be aligned and firmly joined by approved coupling bands to form a leak-resistant joint.

Note: Gaskets of pipe shall conform to the following: Rubber gaskets for ductile iron pipe and fittings shall conform to the requirements of AWWA C111; for concrete sewer pipe shall conform to the requirements of ASTM C443; and for other pipe shall conform to the requirements of AASHTO M198, Type A, and Section 237.

MINIMUM SPACING FOR PIPE JOINTS GOING INTO PRECAST UNITS

Pipe openings in precast drainage units shall not exceed the outside cross sectional dimensions of the pipes by more than a total of 8 inches regardless of the placement of the pipes, their angles of intersection, or the shapes of the pipes.

When filling void between pipe culverts and precast drainage structures, the contractor shall use any of the following in conjunction with mortar:

- Concrete
- Brick
- Masonry Block
- Concrete Pipe Cutoffs
- Native Stone

With exception of concrete, such materials shall be thoroughly wetted, bonded with mortar and the remaining exterior and interior voids filled with mortar to the contour of the precast structure.

When precast units are located adjacent to the subbase or base course of the pavement, precast units with chambers are to have 3-inch diameter weepholes with wire cloth to drain the subbase or base layer.

Backfilling Considerations

- **Proper haunching provides a major portion of the pipe's strength and stability**
- **For pipe larger than 30" in diameter, work embedment material under haunches by hand (knife into area along bottom edge of pipe)**
- **Backfill below springline of pipe, compact next to pipe first and work towards trench wall**
- **Backfill above springline of pipe, compact next to trench wall and work towards pipe**
- **Place backfill material directly on top of pipe to allow material to fall evenly on both sides of pipe (Do not push material from side of trench)**
- **Hold pipe in place when placing backfill to keep pipe from moving**
- **Dump a series of loads of backfill every 10-20 feet to hold pipe in place**
- **Leave material on top of pipe to add weight to the pipe when compacting**

BACKFILL MATERIAL

- **Pipe**
  - **Class I backfill – crusher run, # 25, # 26, aggregate base 21-A or 21-B, flowable fill, or crushed glass conforming to the size requirements for crusher run aggr. size no. 25 and 26 – from bedding to flow line of pipe**
  - **Regular excavation and borrow – from flow line of pipe to 1 foot above top of pipe.**
- **Box Culvert**
  - **Regular excavation or borrow from bedding to 1 foot above top of box**

Pipe and Box Culvert Backfill

- **Excavation width must be wide enough to accommodate compaction equipment**
- **Simultaneously backfill on both sides**
- **Static roll until fill is 3 feet above top of pipe or box**
- **Rocks > 2" must be moved away from structure a minimum of 12"**

Multiple Lines of Pipe

- **Bring fill up uniformly on each side of each pipe**

Backfill Placement Requirements

- **Maximum 6" loose lifts compacted to 4"**
- **95% Density**
- **Optimum moisture**
  - **± 20% for regular excavation or borrow (flow line to 1 foot above top of pipe)**
  - **+ 2 percentage points for Class 1 (bedding to flow line)**

BACKFILL TESTING RATES

PIPES AND BOX CULVERTS

MINIMUM

ONE TEST PER LIFT ON ALTERNATING SIDES OF PIPE FOR EACH 300 FEET OF PIPE OR PORTION THEREOF. TEST PATTERN IS TO BEGIN AFTER FIRST 4″ COMPACTED LAYER ABOVE THE STRUCTURES BEDDING AND CONTINUE TO 1′ ABOVE TOP OF PIPE.

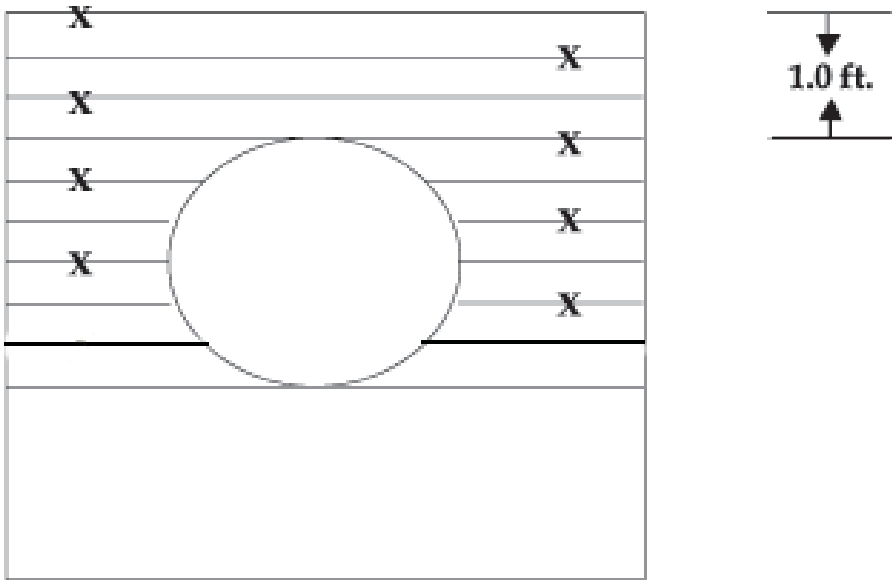

DROP INLETS

MINIMUM

ONE TEST EVERY OTHER LIFT AROUND THE PERIMETER BEGINNING AFTER THE FIRST 4″ COMPACTED LAYER ABOVE THE BEDDING AND CONTINUE TO TOP OF THE STRUCTURE. STAGGER TESTS TO ENSURE CONSISTENT COMPACTIVE EFFORT HAS BEEN ACHIEVED.

MANHOLES

MINIMUM

ONE TEST EVERY FOURTH COMPACTED LAYER AROUND THE PERIMETER BEGINNING AFTER THE FIRST 4″ COMPACTED LAYER ABOVE THE BEDDING AND CONTINUE TO 5 FEET BELOW TOP OF STRUCTURE. IN THE TOP 5 FEET, MINIMUM OF 1 TEST EVERY OTHER LIFT AROUND THE PERIMETER AND CONTINUE TO TOP OF STRUCTURE.

Stone Backfill

- **Compaction Tests are REQUIRED on stone backfill (Class I backfill and bedding material)**
- **Consult the Materials Division for Maximum Density and Moisture Data**

Other Techniques to Install Pipe

- **Pipe jacking**
- **Boring**
- **Tunneling**

INSTALLATION OF PIPES FOR PAVEMENT SUBSURFACE DRAINAGE

Pavement subsurface drainage is essential in obtaining a well performing pavement, whether it is flexible, rigid or composite. A drained pavement structure has a higher bearing capacity that can effectively support traffic loadings, and lead to long lasting pavement at the least maintenance cost.

A trench at the edge of the pavement provides a cavity with the least resistance for water to flow and accommodate pavement drainage. The trench's dimensions and location are typically 1 foot wide and 2 to 4 inches below the subgrade and adjacent to the pavement edge. The specific locations are shown on the plans. There are a variety of pavement under/edge drains in the VDOT Road and Bridge Standards Volume 1 (108.01-108.09) with each addressing a specific geometric condition and groundwater condition.

The most common underdrains are known as UD-4 and UD-7. The UD-4 is used with new construction, while the UD-7 is used for retrofitting existing pavements. These underdrains are segmented systems with outlets spaced at 250 to 350 feet. The components of an underdrain system are:

1. Trench
2. Non-woven geotextile drainage fabric
3. Perforated longitudinal pipe (min. stiffness 35 psi) is the collecting conduit
4. Aggregate backfill (#8 or #57)
5. Non-perforated smooth wall outlet pipe (min. pipe stiffness 65 psi)
6. An end-wall for the protection of the outlet pipe.

The above components are designed to perform three functions to drain water from the pavement, these are:

1. Intercept
2. Collect
3. Discharge

Following is a general guide on the installation of underdrain/edge drain systems:

1. Excavate trench making sure the side walls are stable
2. Remove any sloughed materials from the trench
3. The dug out material is picked up with conveyor belt and loaded in trucks or piled on one side then picked up by a front end loader.
4. Provide a minimum 0.5 to 1% longitudinal slope to enhance positive drainage.
5. Open only as much trench as can be safely maintained by available equipment.
6. Line the trench with the non-woven drainage fabric.
7. Install the longitudinal perforated pipe at the bottom of the trench without bedding material.
8. At the end of the run (250-350 feet) a 45-degree elbow is used to connect the longitudinal pipe to the non-perforated outlet pipe to force the collected water to discharge. The side is called the drainage side.
9. The outlet pipe is connected to the back of the end-wall.
10. Backfill the trench using clean #8 or #57 aggregate as soon as practical, but not later than the end of each working day.
11. Backfill depth is at least equal to the diameter of the pipe.
12. Backfill is usually placed loosely and heaped above the finished level.
13. Use vibratory plate with a welded foot to compact the aggregate backfill.
14. Fold the drainage fabric to provide 100% overlap at the top of the trench.
15. In the case of UD-4, the Open Graded Drainage Layer (OGDL) is placed on top of the completed trench.
16. In the case of UD-7, as asphalt concrete cap is used to complete the backfilling and provide the final surface that is even with the shoulder.
17. Once the system has been installed, it is critical that inspection is performed to ensure that there are no areas that are crushed, clogged or otherwise non-functioning. Inspection is performed in accordance with VTM-108.

QUALITY ASSURANCE

Inspection During Installation:

- **Allows contractor to modify installation and/or quality control practice if necessary**
- **Allows corrective action to be taken prior to final cover being placed**

What to look for:

- **Open and Offset Joints**
- **Migration of fines**
- **Vertical and Horizontal Alignment**
- **Dents in flexible pipe**
- **Wall buckling in flexible pipes**
- **Racking in flexible pipe**
- **Cracks**
- **Damaged pipe**
- **Damaged coating on CMP**

Final Inspection Requirements

- **100% video inspection of all pipe materials (30 days after final inspection)**
- **10% of total length of flexible pipe tested for deflection**

Primary Acceptance Criteria

- **All pipes**
  - Joints - open and/or offset - 1″
  - Alignment
- **Rigid - RCP**
  - Cracks - 0.1″ maximum
- **Flexible - CMP and Thermoplastic Pipe**
  - Deflection - 7.4% maximum

CHAPTER 4
Study Questions

1. Before starting to dig what should be located? _____

2. True or False. When moving concrete pipe you should pick it up by one end.

3. The foundation for the pipe should be shaped to a minimum of _____ the circumference.

4. When backfilling around pipe test _____ _____.

5. Use of a _____is the best way to shape the bedding material for a pipe.

6. To be placed within 12 inches of a pipe, the maximum size a rock can be is _____.

7. True or False. You do not have to place pipe bedding material down first when installing a UD-4.

8. Where can the typical underdrain drawings be found? _____

9. The maximum height of cover for a 48 inch pipe diameter Class IV concrete pipe culvert is _____.

10. A 36 inch diameter pipe 290 feet long is placed on a project as a drainage culvert. What is the minimum number of density tests that should be run on the <u>backfill</u> material?

11. When can No. 57 stone be used? _____

12. What is the maximum backfill lift thickness? _____

13. Pipe openings in precast drainage structures shall not exceed the outside cross sectional dimensions of the pipe by more than _____.

14. The video inspection can be done _____ after installation is complete.

15. The maximum allowed crack size of rigid pipe is _____.

16. The maximum deflection allowed for flexible pipe is _____.

17. At what end of the pipe system do you start installation? Upstream or downstream? _____

18. For pipe backfill, the level of compaction required is _____.