Failure and Repair of a Deck Closure Pour on Interstate 81

Virginia Concrete Conference
Richmond, Virginia
March 4 and 5, 2010

Michael Sprinkel, Associate Director
Virginia Transportation Research Council
Chris Blevins, Arch/Engineer
Virginia Department of Transportation
Richard E. Weyers, Professor
Andrei Ramniceanu, Research Associate
Sean A. Weyers, Research Assistant
Virginia Tech

INTRODUCTION

- An increasing number of decks built during the early days of the construction of the Interstate system are being repaired, overlaid or replaced because of corrosion related deterioration.
- To facilitate traffic flow during a deck replacement it is common practice to replace one lane and shoulder of the deck while traffic uses the adjacent lane.
- One scenario for replacing the deck is to use a closure pour to connect the two new deck sections.

Introduction Continued

- In 1992 several reinforced concrete decks on I81 near Marion Virginia were replaced using the closure pour scenario.
- Epoxy Coated Reinforcement (ECR) extending from each of the decks was lapped within the 3-ft wide center closure pour that connected the two new deck placements.

Transverse section of the bridge deck showing the location of the closure pour.

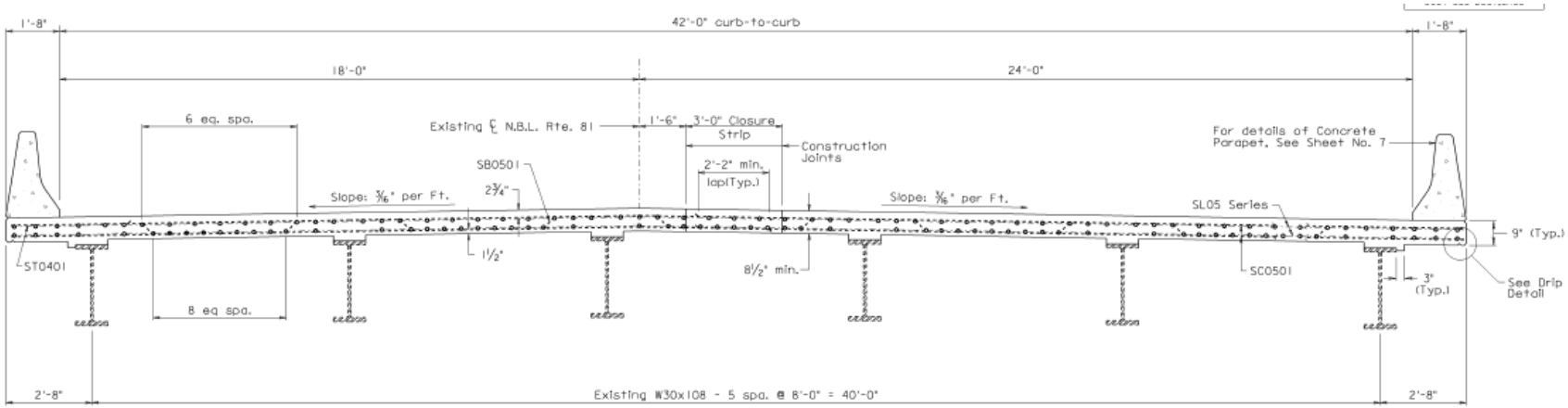

TRANSVERSE SECTION
(N.B.L. shown, S.B.L. opposite hand)

TRANSVERSE SECTION

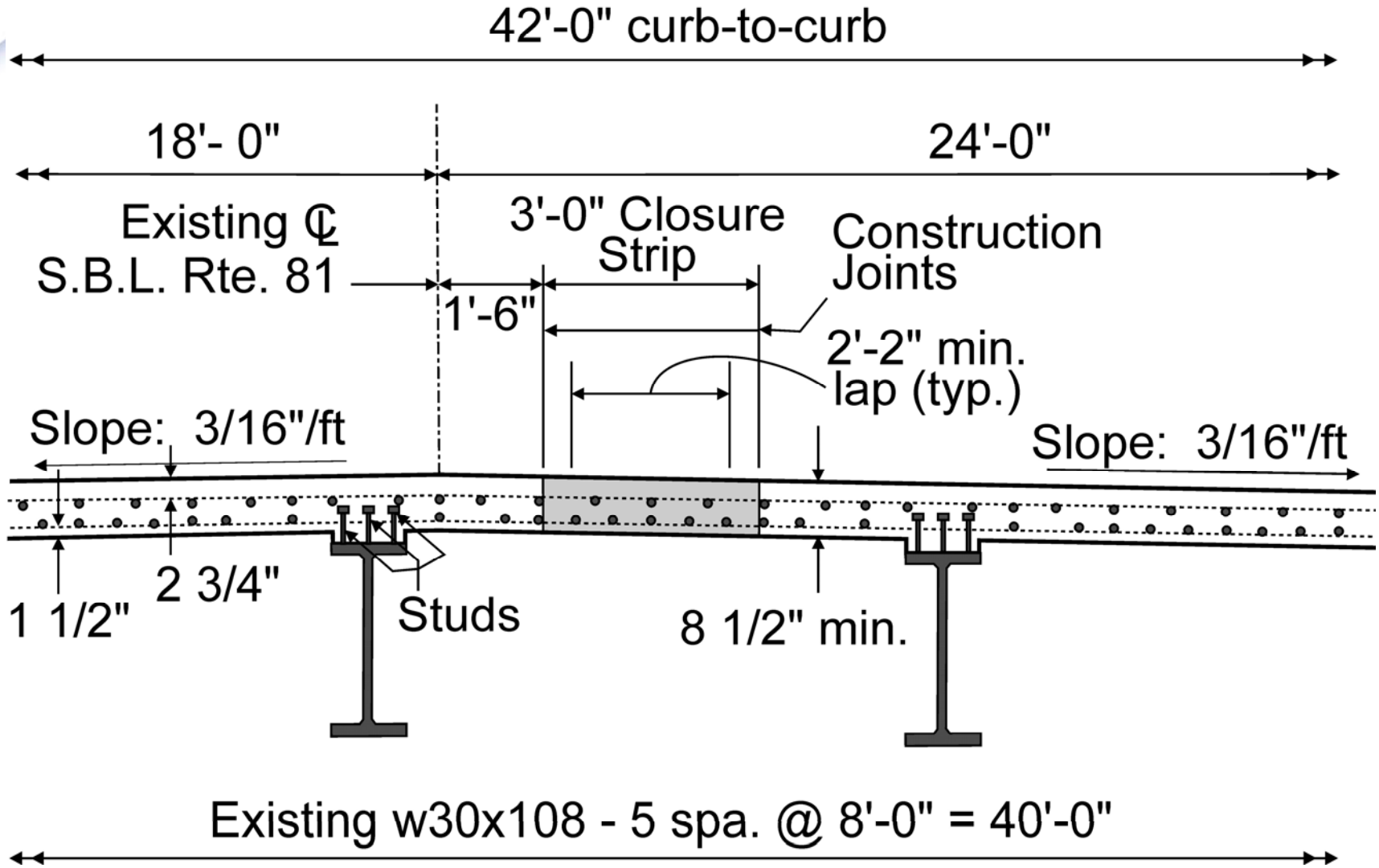

On April 6, 2009 a 3’ x 3’ section of one of the closure pours punched through.

Transverse crack in failed section 3 weeks prior to failure.

Introduction Continued

- An evaluation of the failure revealed that a total of eighteen #5 rebars (10 transverse and 8 longitudinal) were sheared to create the hole in the deck.
- The ECR had sustained considerable section loss due to corrosion caused by water and chlorides leaking through the construction joints and transverse crack .
- Subsequently, two other bridge decks built using the same closure pour detail were observed to be in a near failure state.

Purpose of Research

- **The objective of this study was to determine the cause and significance of the failed closure pour and to recommend a closure pour scenario that will have a much longer service life than17 years.**

Scope

The scope included:

- condition assessment of the construction joints
- condition assessment of the ECR
- condition assessment of deck concrete
- changing design details to provide a longer lasting closure pour

The approach included visual inspection and photographs of the construction joints and evaluations of 4 slab sections removed for the closure pour replacement.

Methods

Slabs evaluations were done at the Virginia Tech Structures and Materials Research Laboratory. The evaluations included:

- visual inspection and photographs of the condition of the ECR
- current flow and resistivity measurements
- electrical potential measurements
- removing concrete samples at 3 depths and determining the chloride ion content
- removing 4-in diameter cores and measuring the permeability to chloride ion

Methods Continued

- **Results from previous research at VTRC on corrosion resistant reinforcement and expansive concrete mixtures were used to recommend a longer lasting closure pour scenario.**

Results

- Condition of the construction joints
- Recording the condition of the 4 slabs
- Construction joint and crack widths
- Condition of the ECR
- Corrosion data for slabs 1 through 4
- Chloride ion content data
- Permeability to chloride ion data
- Changing design details to provide a longer lasting closure pour

Condition of the construction joints

- An examination of the underside of the deck revealed that one or both of the construction joints were leaking.
- Shrinkage of the concrete had caused an obvious open space between the adjacent concrete placements.
- The open space allowed water and chloride ions to make direct contact with the transverse ECR that crossed the joints.
- The epoxy coating did not protect the reinforcement from corrosion.

Calcium hydroxide, calcium carbonate and rust stains are visible along the leaking construction joints.

Recording the condition of the 4 slabs

- The four slabs removed from the closure pour area were numbered 1 through 4.
- Slab 1 was located next to the North (upstream) abutment and slab 4 was located next to the failed section which was adjacent to the South (downstream) abutment.

I81/MM43/SB/RL/SLAB 1 - Crack/Damage Survey & Rebar Locations

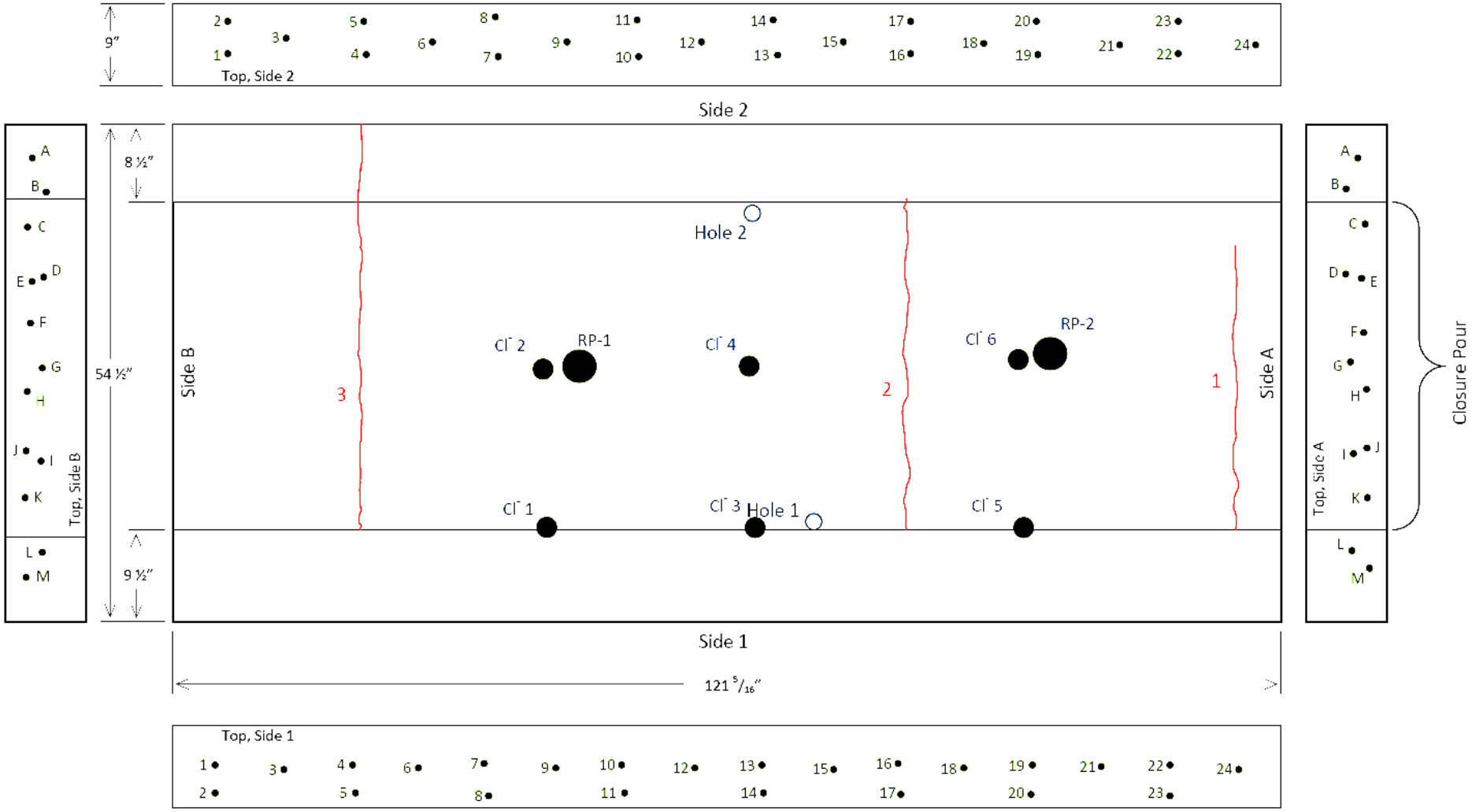

Construction joint and crack widths

- Slab 1, side 1: 0.012-in
- Slab 1, side 2: 0.014-in
- Slab 2, side 1: 0.015-in
- Slab 2, side 2: 0.008-in
- The construction joint widths and 13 of the 29 transverse crack widths equaled or exceed the 0.007-in width considered to be a threshold width for sealing a crack to prevent water and chloride penetration (1).

Condition of the ECR

- The coating was spalling over much of the surface of all of the ECR removed during the demolition of the closure pour and adjacent deck concrete.
- Corrosion was present on the uncoated surfaces.
- The ECR in the vicinity of the construction joints was heavily corroded and the epoxy coating was not bonded.

Corrosion of ECR at construction joint. The green coating has turned brown and the bars have sheared.

Deteriorated 17 year old ECR, new ASTM A1035 reinforcement, and new ECR.

Condition of the ECR continued

- Section loss varied greatly, from none to 84%.
- The worst case of section loss was found in the reinforcement in the vicinity of the construction joint in another deck (NBL MM 47). Some bars had lost all of their section.
- Complete section loss inside an epoxy coating was first observed in Florida in bridge substructures in 1988 (*2*). Research concluded that the rate of corrosion of ECR is greater than for black bar in concrete 2 to 8 ft above sea level in marine environments (*2*).

Condition of the ECR continued

- The closure pour failure indicates that the environment of leaking construction joints and cracks in decks is as severe as that of the splash zone in a marine environment.
- The risk of reinforcement failure may be greater for joints and cracks in decks than for substructures because of the higher stress on the reinforcement caused by traffic.
- ECR does not perform well in either environment.

Corrosion data for slabs 1 through 4

- Average cover depths ranged from 3.35 to 4.14-in for slabs 1 through 3 and 3.08 to 3.48-in for slab 4.
- Cover depths were more than adequate to prevent chloride induced corrosion of the reinforcement.

Corrosion data continued

- The electrical continuity of the reinforcing steel was ascertained using a continuity meter.
- The entire reinforcing system was continuous.
- The epoxy coating had deteriorated over 17 years to a point that it was not providing a barrier that resisted current flow.

Corrosion data continued

- **Resistivity, corrosion current (3LP) and half cell potential measurements were made above the middle of the bars in the slabs.**
- **Average resistivity measurements for slabs 1 through 4 ranged from 6.8 to 13 kΩ-in (*3*). Values less than 20 kΩ-in indicate that in the presence of moisture, oxygen, and chlorides, the concrete is capable of promoting reinforcement corrosion.**

Corrosion data continued

- **Average 3LP measurements for slabs 1 through 4 ranged from 0.32 to1.96 mA/ft2 (*4*).**
- **Values of 0.2 - 1.0 are indicative of corrosion damage in 5 - 10 years and values of 1.0 - 10 are indicative of corrosion damage in 2 - 5 years.**

Corrosion data continued

- Half cell potentials ranged from -0.307 to -0.580 v CSE (*5*).
- Twenty six of the 59 measurements were more negative than -0.350 v CSE.
- Values more negative than -0.350 v CSE are indicative of a 90% probability of corrosion for black bar.
- Given the deteriorated condition of the epoxy coating the black bar threshold is likely appropriate.

Chloride ion content data

- **Powdered samples were taken from slabs 1 and 2 at 6 locations and 4 depths at each location.**
- **The samples were titrated for acid soluble chloride ion content (*6*).**

Chloride ion content data continued

Sample depth	0-in to 1-in	1-in to 2-in	2-in to 3-in	3-in to 3.5-in
Edge of slab, average, lb/yd3 (s)	12.3 (4.1)	6.2 (1.1)	4.7 (1.9)	5.6 (1.1)
Center of slab, average, lb/yd3 (s)	13.9 (1.8)	3.8 (2.3)	0.5 (0.3)	0.5 (0.3)

- Chloride content along the construction joints is sufficient at all levels to cause corrosion.
- Chloride content along the center of slabs is not sufficient at the rebar level (2-in to 3-in) to cause corrosion.

Chloride ion content data continued

- With the greater than required cover depths of 2.5-in, the closure pour deck should have provided a service life far greater than the 47 years anticipated for decks constructed in 1992 (*2*).
- The early failure can be attributed to chlorides in the vicinity of the construction joints and cracks and the failure of the epoxy coating to protect the reinforcement.

Permeability to chloride ion data

- Two 4-in diameter cores were taken from each of slabs 1 and 2 and tested for permeability (*7*).
- The cores were sealed with shrink wrap, aluminum foil and duct tape to maintain the in service moisture content.
- The cores were wrapped with duct tape prior to cutting the 2-in thick slices from the top 2-in and next 2-in (bottom) of the cores for testing.
- The slices were first tested in the as received moisture content condition.
- The slices were also vacuum saturated, as required by AASHTO T277, and tested again.

Permeability to chloride ion continued, AASHTO T 277, coulombs

Core condition	As received moisture		Saturated	
Core slice	top	bottom	top	bottom
Average	604	820	1687	1783

The average permeability in the as received condition is very low and in the saturated condition low.

Permeability to chloride ion continued

- These results show that the use of saturated specimens in the rapid permeability test may not be representative of the permeability of the concrete in service.
- The concrete has a saturated permeability that is typical of VDOT bridge deck concrete produced in the 90s and has an anticipated time to corrosion of 47 years with a 2.5-in cover depth (*2*).

Changing design details to provide a longer lasting closure pour

- The closure pour failed after only 17 years.
- Design changes to achieve a long service life included 1) moving the location of the construction joints to over the beams so the closure pour is supported by the adjacent beams rather than just the transverse reinforcement, 2) using corrosion resistant reinforcement rather than ECR and 3) using an expansive concrete mixture to eliminate or minimize any opening of the construction joints due to shrinkage of the concrete.

Corrosion resistant reinforcement (ASTM A1035) spans between the beams that support the longitudinal edges of the new closure pour.

Bridge deck concrete prepared with Type K cement is placed for the new closure pour.

Conclusions

1. Closure pour concrete was typical of VDOT concrete produced in the early 90s and cover depths were greater than required and consequently the closure pour deck should have provided a service life far greater than the 47 years anticipated for decks constructed in 1992.
2. Leaking closure pour construction joints and transverse cracks were allowing water and chloride ions direct access to the ECR.
3. Chloride ion contents along the walls of the construction joints were high enough to cause corrosion throughout the depth of the slab in the vicinity of the joints.

Conclusions continued

4. Corrosion measurements indicated the ECR was corroding at a high rate in the vicinity of the construction joints.
5. The epoxy coating was not protecting the reinforcement from corrosion in the vicinity of the leaking construction joints and transverse cracks.
6. The ECR was corroding in the construction joints and several inches into the concrete adjacent to the construction joints.

Conclusions continued

7. The epoxy coating had lost adhesion and was providing little protection against corrosion either as a barrier to chloride ions or as a barrier to prevent current flow.
8. The environment of leaking construction joints and cracks is as severe as that of the splash zone in a marine environment. ECR does not perform well in either environment.

Recommendations

1. Use corrosion resistant reinforcement (ASTM A1035), solid stainless or stainless clad to prevent corrosion of reinforcement in concrete decks with cracks and construction joints with a width $\geq$ 0.007-in.
2. Use expansive deck concrete for closure pours to minimize or prevent the opening of closure pour construction joints and the formation of cracks due to shrinkage of the concrete.

Recommendations continued

3. Place closure pour construction joints over beams so that the closure pour is supported by the adjacent beams rather than the transverse reinforcement.

References

1. *Control of Cracking in Concrete Structures 224R-01*, American Concrete Institute Manual of Concrete Practice Part 3, ACI, Farmington Hills, Illinois, 2001
2. Weyers, R; M. Brown and M. Sprinkel, *Summary Report on the Performance of Epoxy Coated Reinforcing Steel in Virginia* VTRC 06-R29, Virginia Transportation Research Council, Charlottesville, Virginia, 2006.

References continued

3. Feliu, S., Gonzales, J. A. and Andrande, C. *Electrochemical Methods for On-Site determinations of Corrosion Rates of Rebars.* Techniques to Assess the Corrosion Activity of Steel Reinforced Concrete Structures. ASTM STP 1276, Neal S. Berke, Edward Escalante, Charles K. Nmai and David Whiting, Eds., Washington, D.C., 1996.

4. Clear, Kenneth C. *Measuring Rate of Corrosion of Steel in Field Concrete Structures*. Kenneth C. Clear, Inc. Concrete Materials and Corrosion Specialists, Sterling, Virginia 1989.

References continued

5. ***ASTM C876 - 09 Standard Test Method for Half-Cell Potentials of Uncoated Reinforcing Steel in Concrete,*** **ASTM International, West Conshohocken, PA 2009.**
6. ***AASHTO T 260 Standard Method of Test for Sampling and Testing for Chloride Ion in Concrete and Concrete Raw Materials*****, American Association of State Highway and Transportation Officials, Washington DC, 1997.**
7. ***AASHTO T 277-96: Standard Method of Test for Electrical Indication of Concrete's Ability to Resist Chloride Ion Penetration (ASTM C 1202-94),*** **American Association of State Highway and Transportation Officials, Washington, D.C., 2003.**

QUESTIONS?

Failure and Repair of a Deck Closure Pour on Interstate 81

Virginia Concrete Conference
Richmond Virginia
March 4 and 5, 2010

Michael Sprinkel, Associate Director
Virginia Transportation Research Council
Chris Blevins, Arch/Engineer
Virginia Department of Transportation
Richard E. Weyers, Professor
Andrei Ramniceanu, Research Associate
Sean A. Weyers, Research Assistant
Virginia Tech