Route 360 Inverted T-beams

Carin Roberts-Wollmann – Virginia Tech
Tommy Cousins – Clemson University
Fatmir Menkulasi – Louisiana Tech

Virginia Tech
Virginia Polytechnic Institute and State University

Outline

- Background
- Scope and Objectives
- Development and Testing
  - Topping Mix Design
  - Cross-sectional Shape and Transverse Connection
  - Composite Action
- Recommendations
- Field Testing

Background: Typical Adjacent P/S Box Beam Construction

Low volume bridges, asphalt overlay (Kevlar)

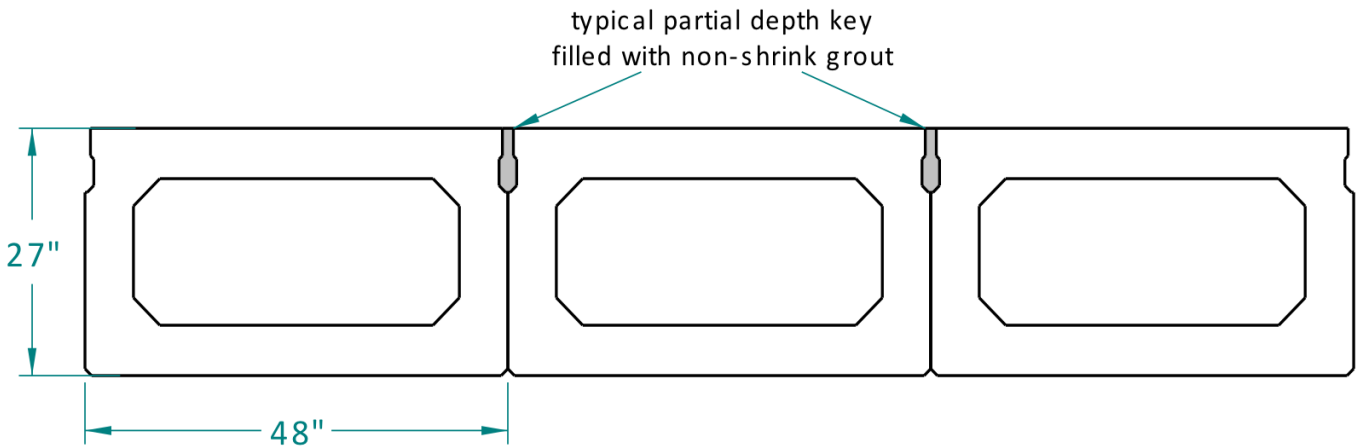

High volume bridges, RC topping

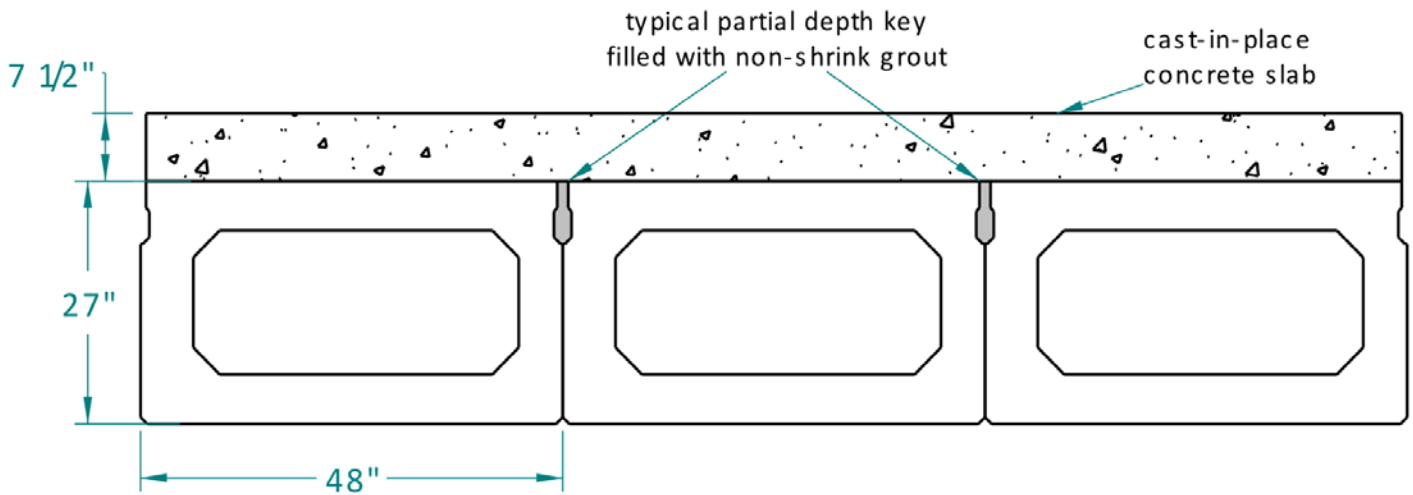

The Problem – Reflective Cracking

Caused by transverse distribution of loads, temperature, shrinkage and creep affects

One Solution: Inverted T-Beam System

Poutre-Dalle System

(2004)

Application in Minnesota

(2005-2014)

Why the Inverted T-Beam System?

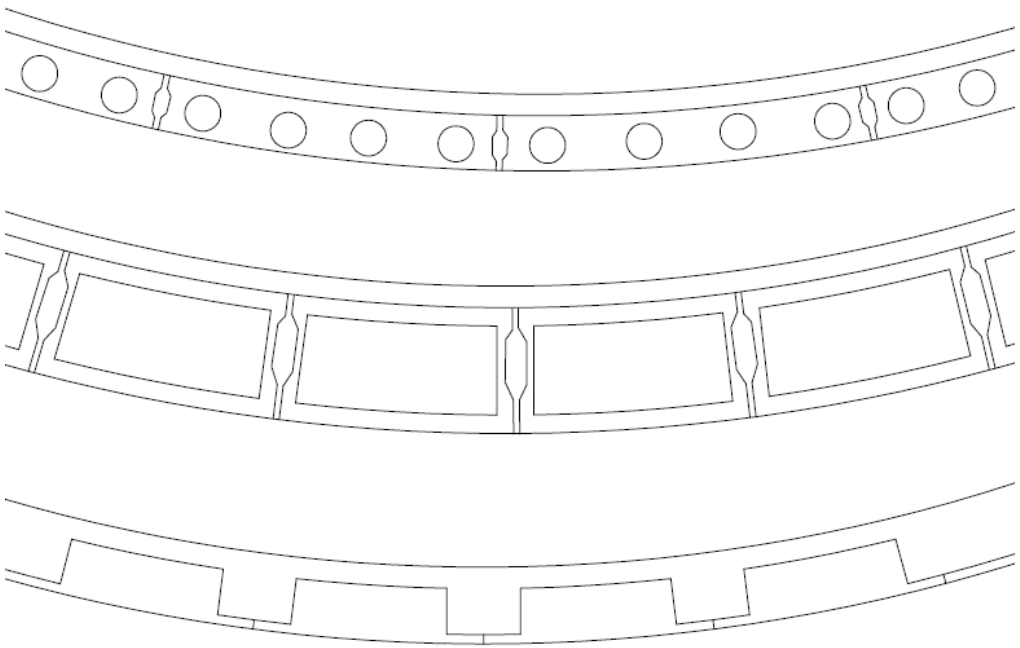

- In a grouted shear key transverse tension is only resisted by grout/concrete bond & optional transverse P/T
- In the inverted T a thicker topping is used and horizontal and vertical interfaces provided. Also, reinforcement crosses any potential crack.

Project Objective

Improve Minnesota Inverted T Beam for use by VDOT

Minnesota

Virginia

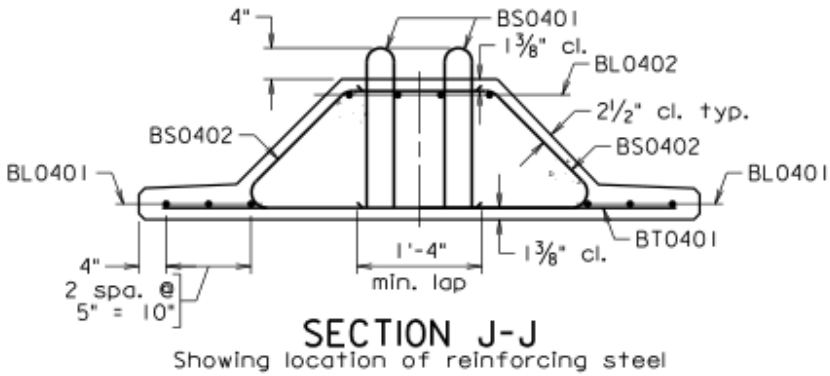

Project Scope

- Investigate concrete mixtures for topping to reduce cracking
- Improve cross-section to reduce stress concentrations and improve bond
- Develop alternate transverse connection details to enhance constructability
- Develop recommendations for implementation
- Test full scale system

Reinforced Concrete Topping Mix Design

Restrained Shrinkage Cracking

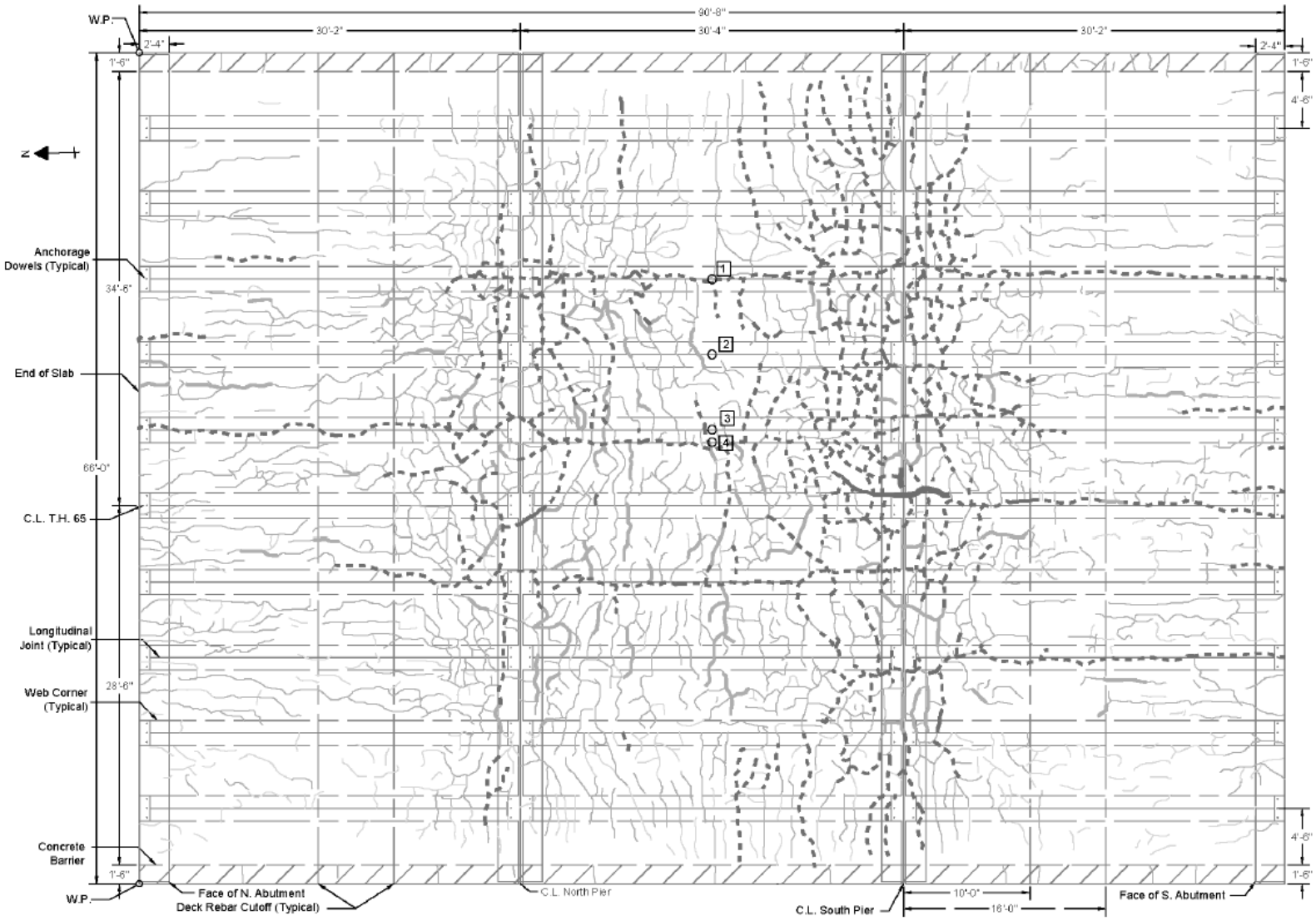

Time Dependent Analysis of the US 360 Bridge

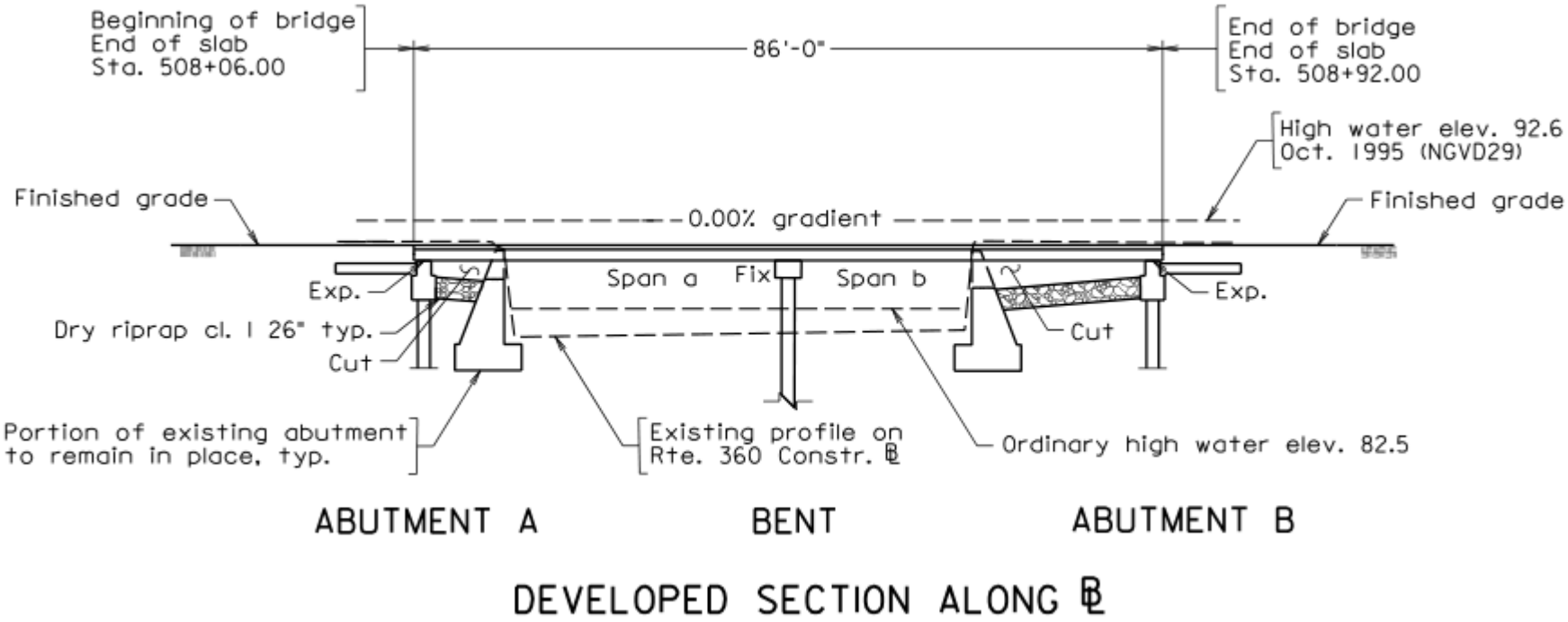

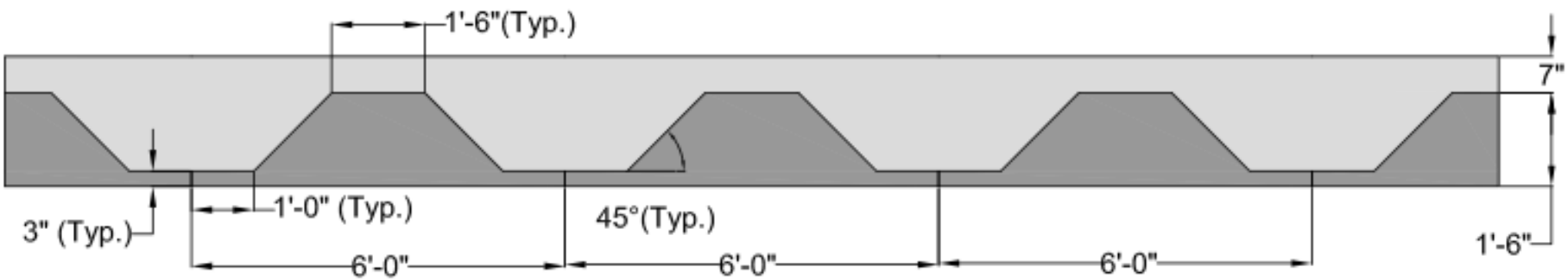

Transverse Cross-section

Time Dependent Analysis

Differential Shrinkage

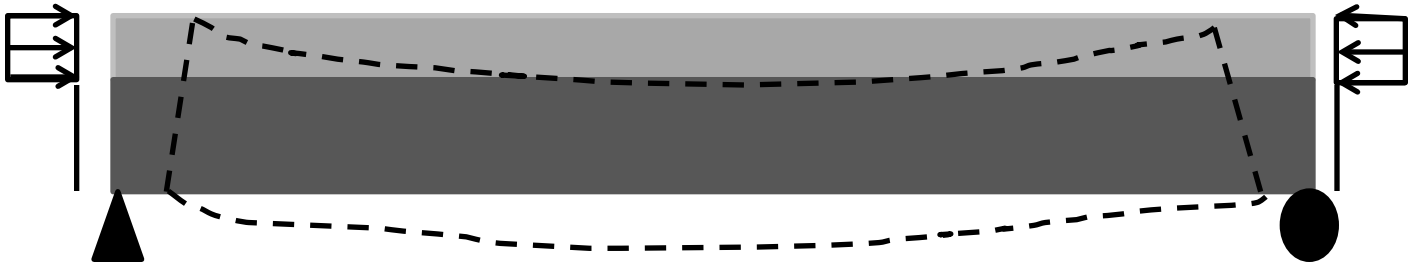

Negative Temperature Gradient

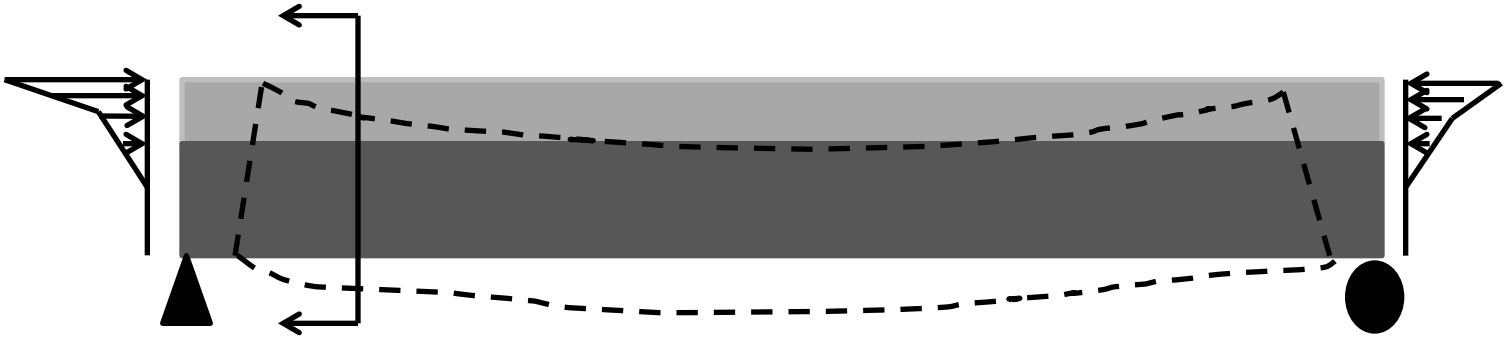

Results of Time Dependent Analysis

Tensile stresses at the top of the deck					
Section	Differential Shrinkage (ksi)	Temperature Gradient (ksi)	Total (ksi)	f_r (ksi)	Total/f_r
1	0.052	0.15	0.202	0.474	0.43
2	0.352	0.154	0.506	0.474	1.07
3	-0.264	0.15	-0.114	0.474	N/A
Tensile stresses at the bottom of the deck					
Section	Differential Shrinkage (ksi)	Temperature Gradient (ksi)	Total (ksi)	f_r (ksi)	Total/f_r
1	0.373	0.1	0.473	0.474	1.0
2	0.496	0.09	0.586	0.474	1.24
3	0.487	0.02	0.507	0.474	1.07

Longitudinal Cracks

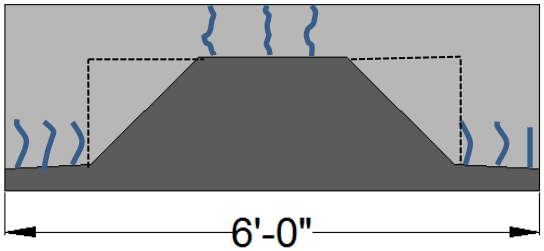

Section 1

Trans. Cracks

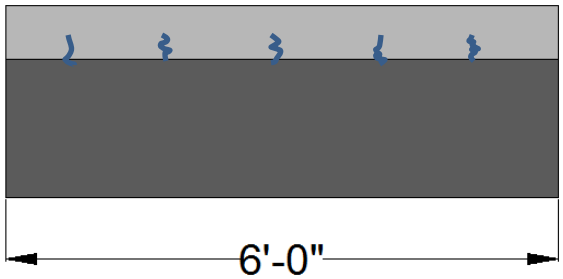

Section 2

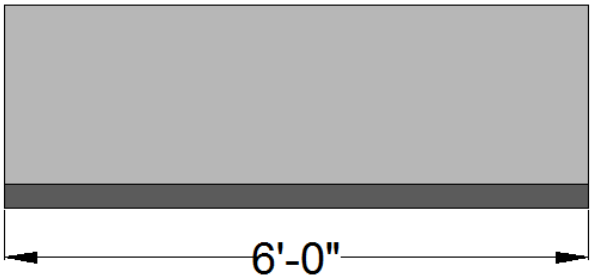

Section 3

Investigate Topping Concrete Mixtures

- Low Shrinkage
- Moderate to high creep

Seven VDOT Mixes Tested

- Normal Weight Aggregate with Fly Ash
- Normal Weight Aggregate with Slag I (65-35)
- Lightweight Aggregate with Fly Ash
- Lightweight Aggregate with Slag
- Normal Weight with Saturated Ltwt Fine Aggregate
- Normal Weight Aggregate with Slag II (60-40)
- Normal Weight with Saturated Ltwt Fine Agg. And Slag

	NW-FA	NW-SL-I	LW-FA	LW-SL	NWC-SLFA-SL	NW-SL-II	NWC-SLFA
Shrinkage Strain (με) at 100 days	466	483	603	606	310	264	215
Creep Coefficient at 100 days	1.87	1.24	1.22	0.70	0.89	1.03	1.93

Improve Shape and Transverse Connections Inverted T Beam

Two-way plate behavior and reflective cracking

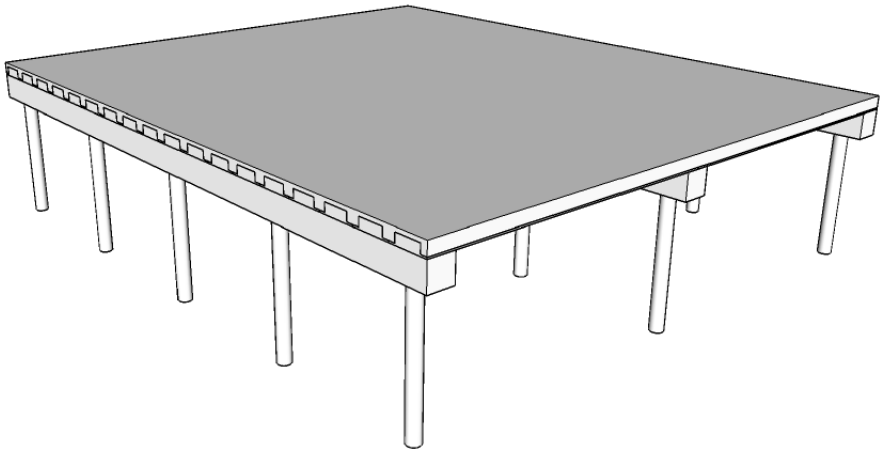

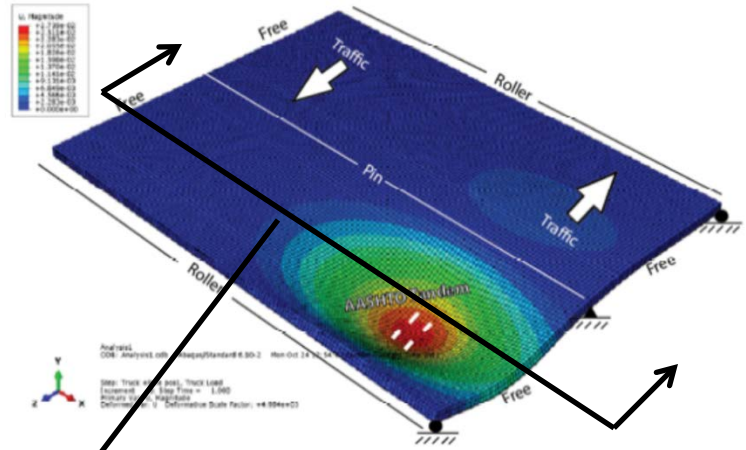

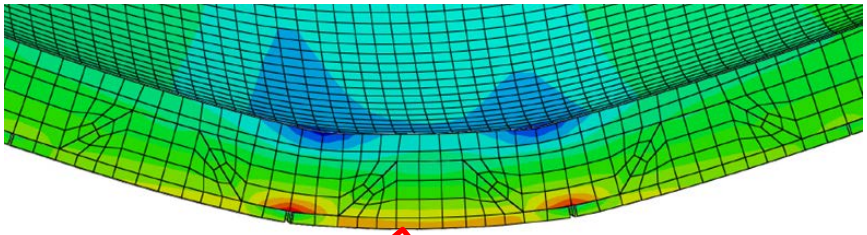

Test setup to represent transverse bending

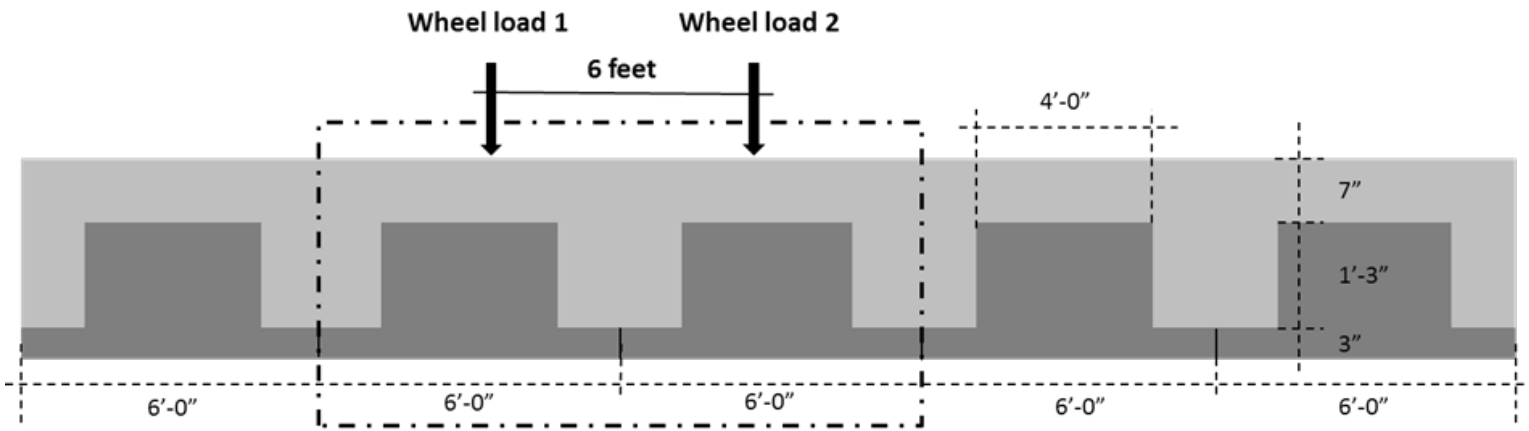

Section of the Inverted T beam system investigated in the laboratory for bending in the transverse direction

25 inches

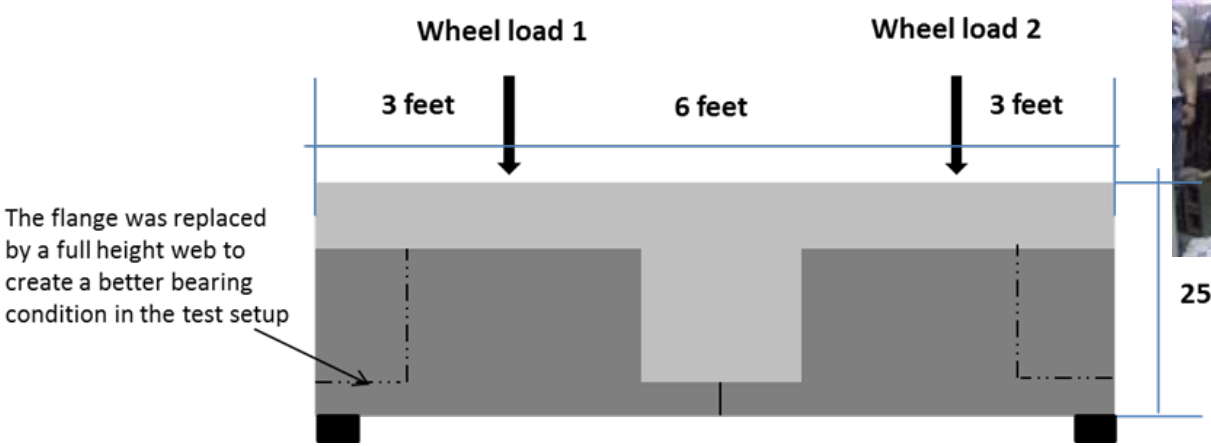

Two cross-sectional shapes

Original

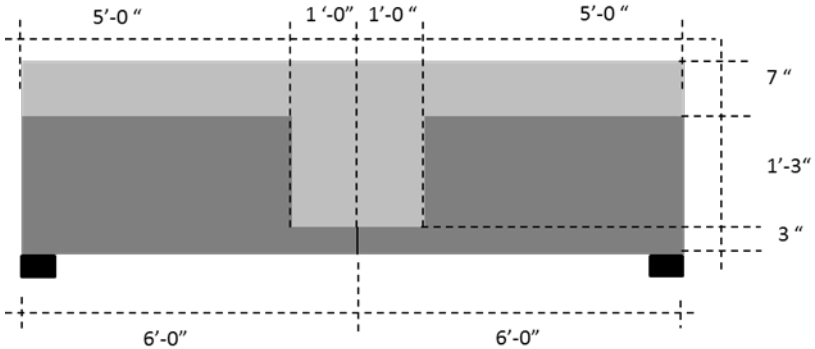

Tapered Web

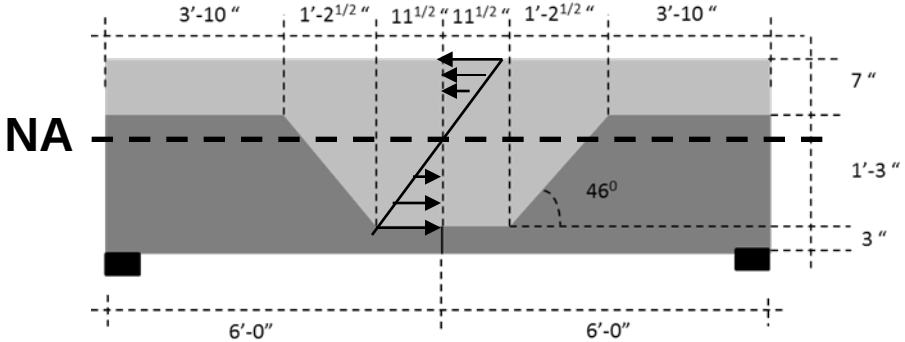

Stress Concentrations

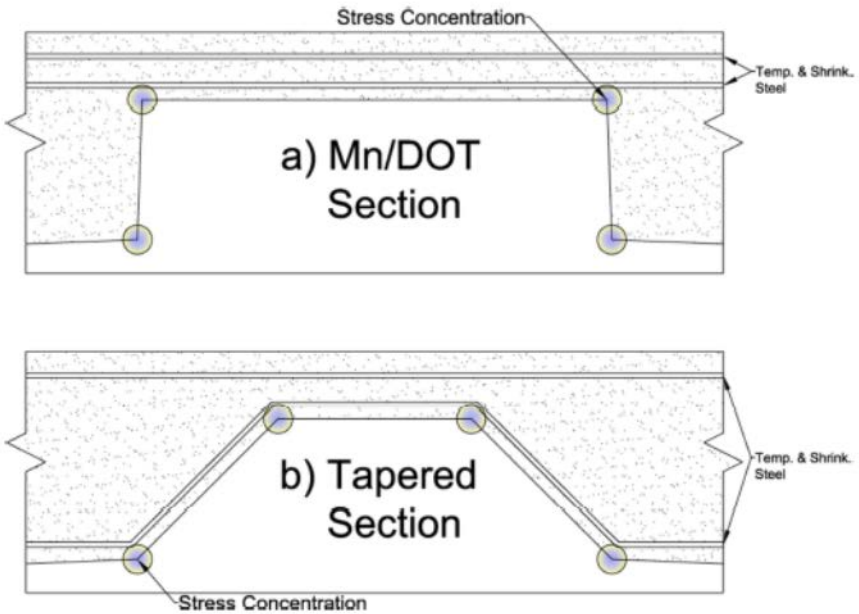

Resistance to normal tensile stresses

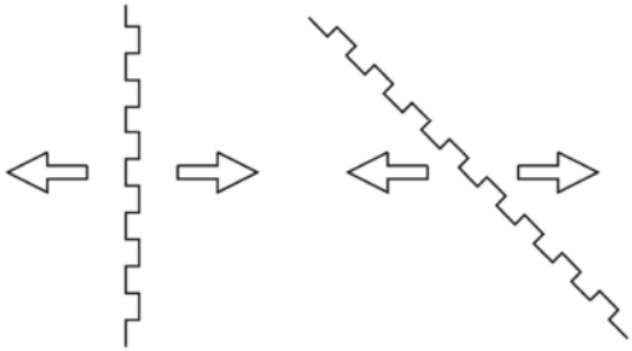

Three Inverted T Connections

Extended Bars (Original)

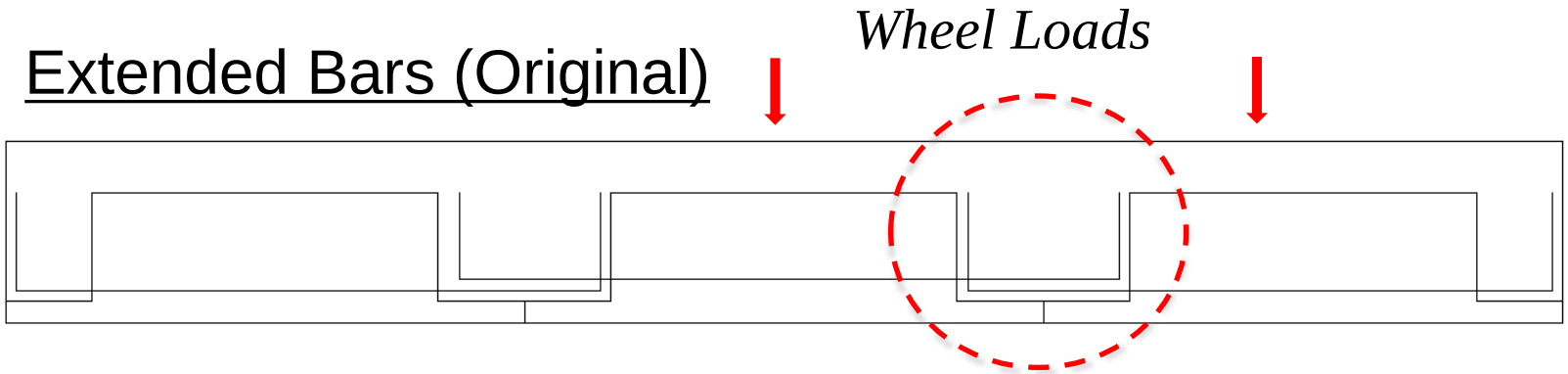

Embedded Steel Plate and welded rebar (Vector Connector)

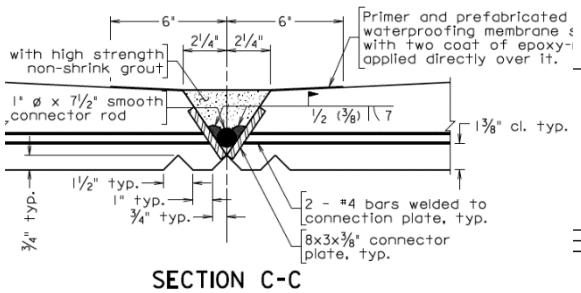

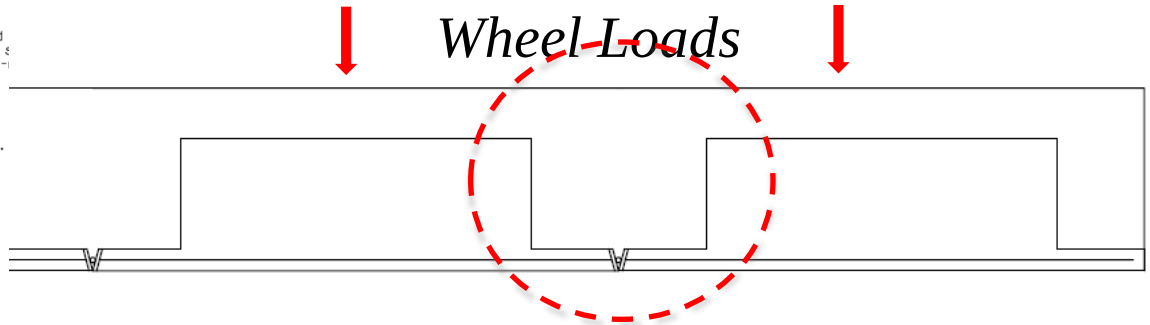

No mechanical connection

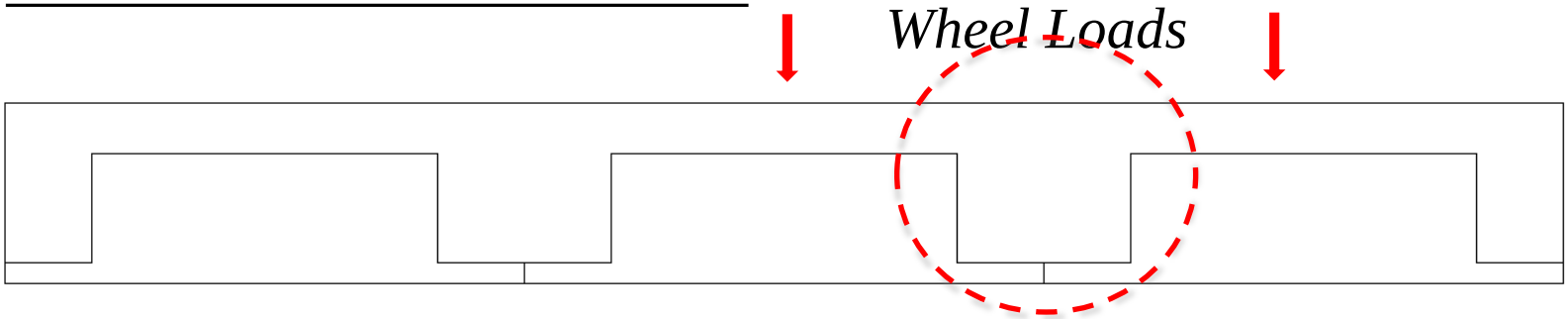

Roughened Surface

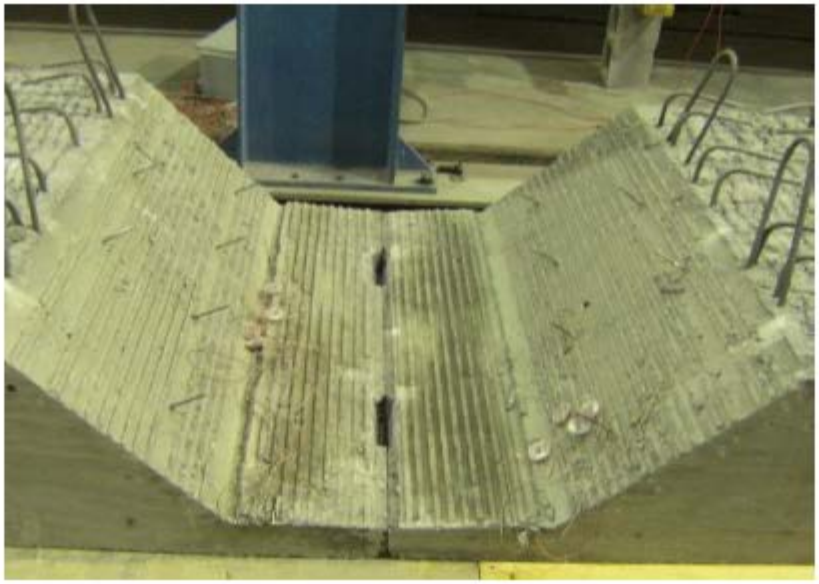

(a)

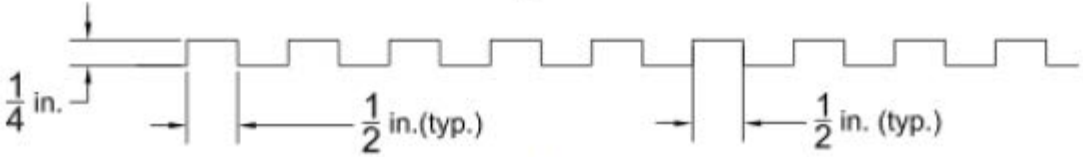

(b)

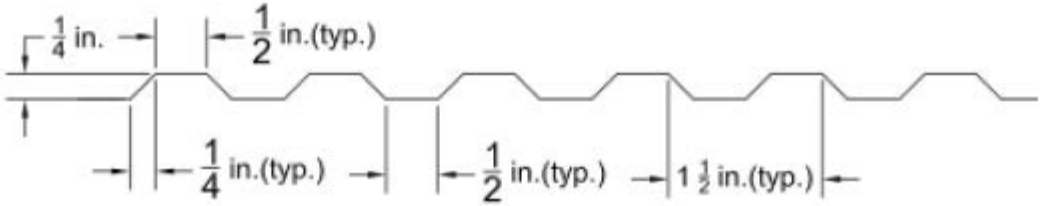

(c)

Phase I - Four Specimens

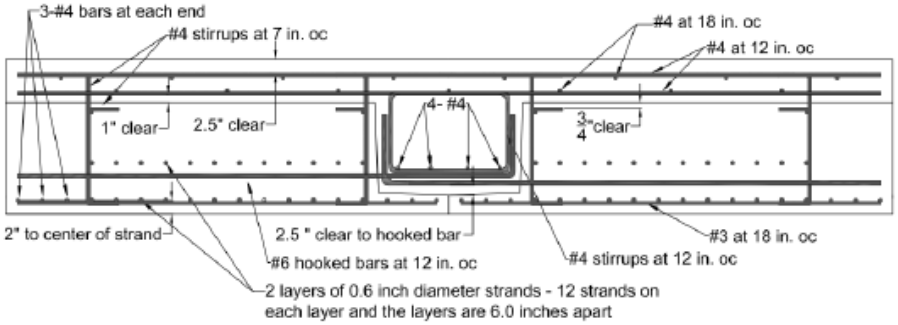

Specimen #1 (Control)

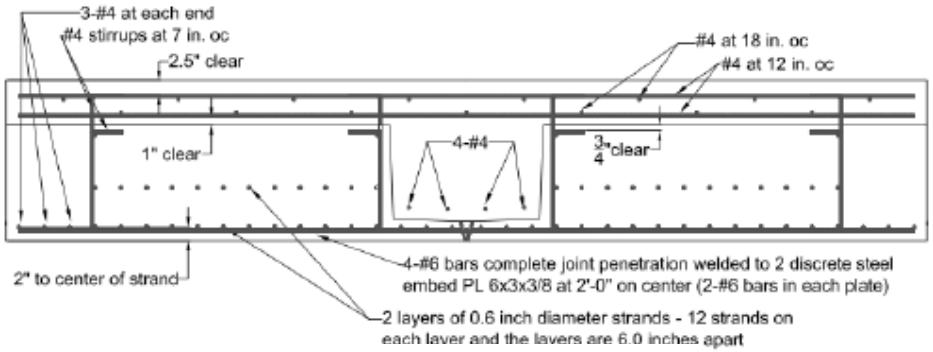

Specimen #2

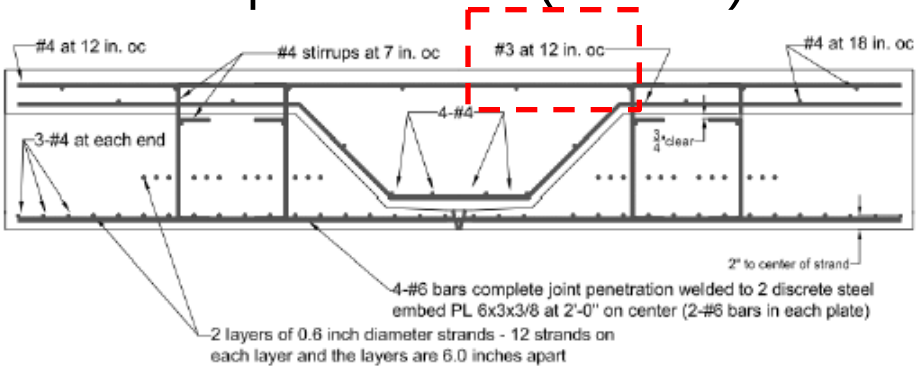

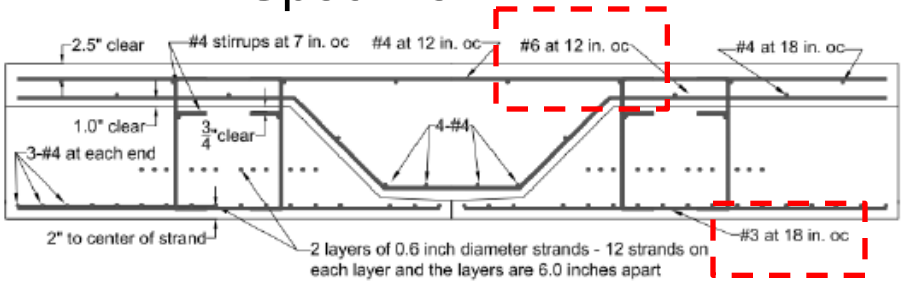

Figure 3.23 Reinforcing details for Test Specimen No.4

Specimen #4

Specimen #3

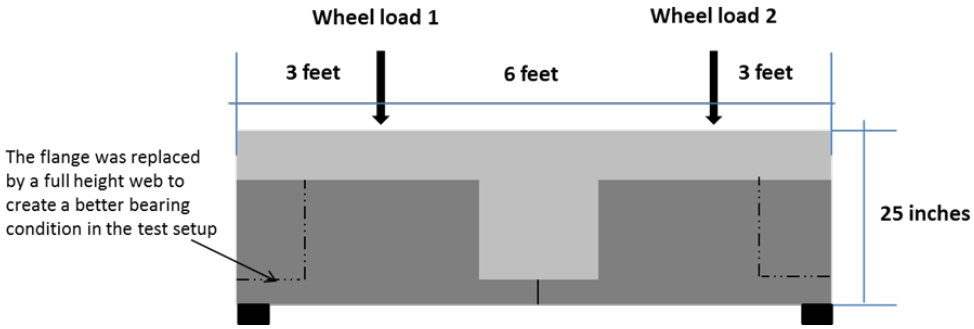

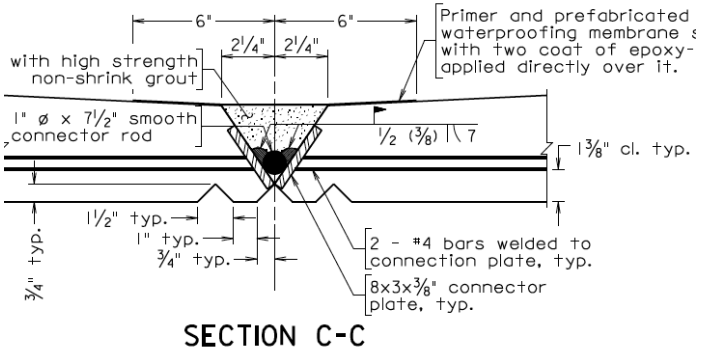

Phase II - Three Specimens

Further investigate trapezoid shape without welding

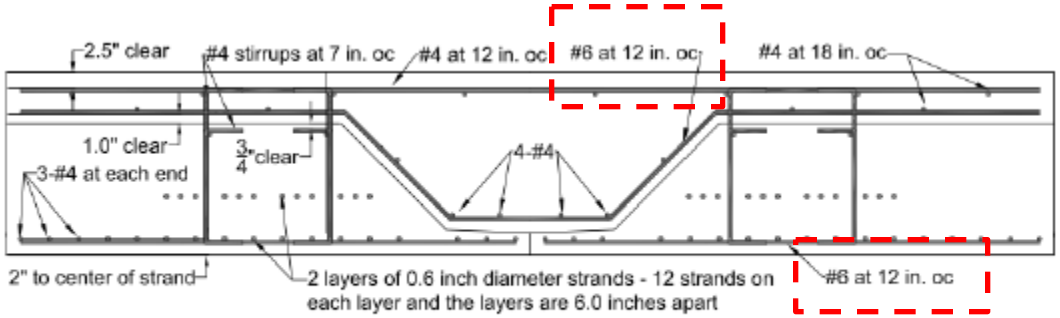

Specimen #5

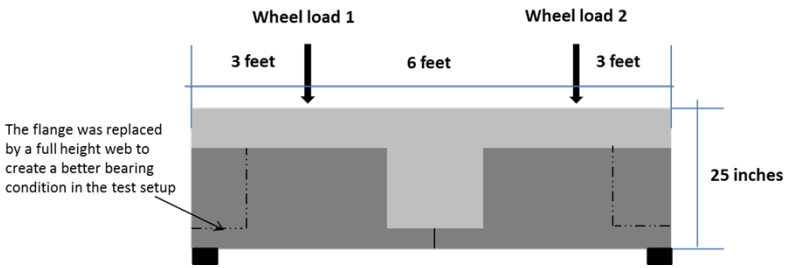

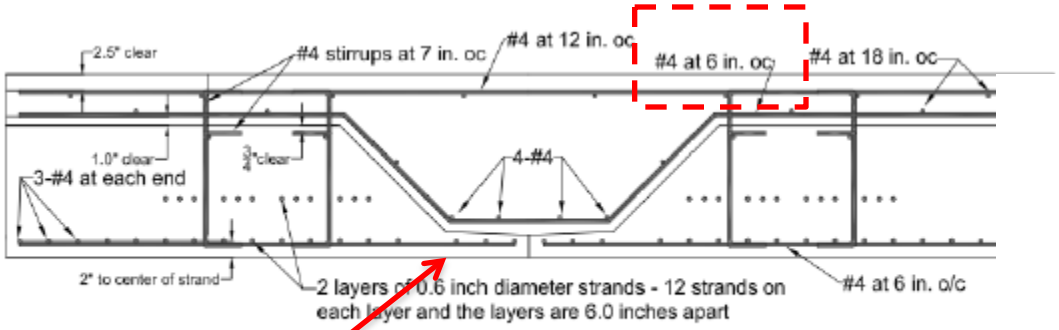

Specimen #6

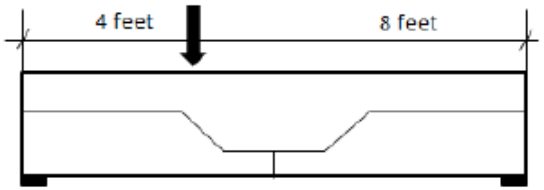

Specimen #7

Note non-contact lap splices

Results

Specimen ID		P_{cr} (kips)	P_u (kips)	FS_{cr}	$FS_{ultimate}$
Trial		80	300 (test stopped due to capacity of the frame)	2.27	7.48
1		90	260 (many cracks in CIP topping in all directions)	2.50	6.53
2		100	225 (fracture of weld at one location and rebar at another)	2.74	5.70
3	Vector	110	300 (test stopped due to capacity of the frame)	2.98	7.48
4	None	60	90 (large crack through precast section)	1.80	2.50
5	None	70	240 (large crack in CIP topping above the joint)	2.00	6.00
6	None	70	140 (large crack in CIP topping above the joint and parallel with the tapered interface on one side)	2.00	3.70
7	Shear	50	81	2.00	3.10

< Tapered >

Unfactored HL-93 loading used to get factors of safety

Testing Full Scale Beam

Objectives

- Determine if horizontal shear reinforcement is needed to develop full composite action
- Determine if an inverted T beam can develop it's calculated nominal moment capacity (ΦM_n)

Test Girder

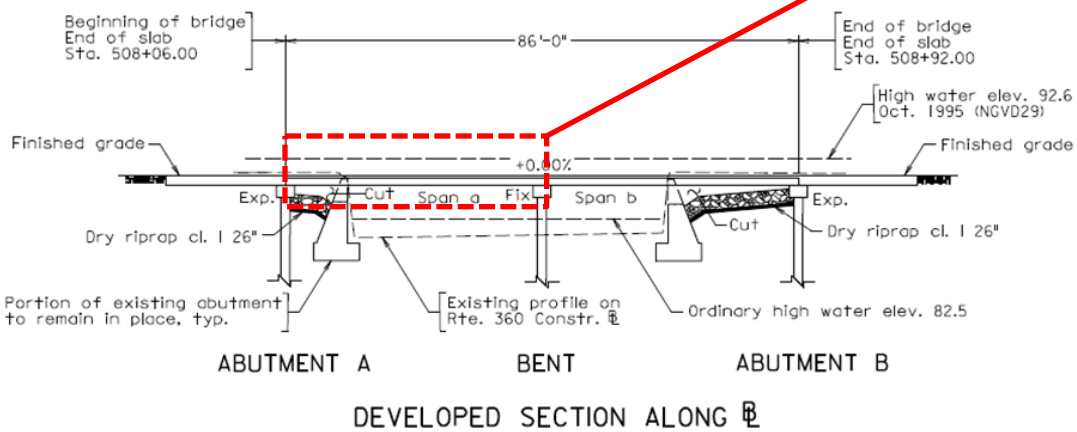

Elevation

Reinforcement Plan

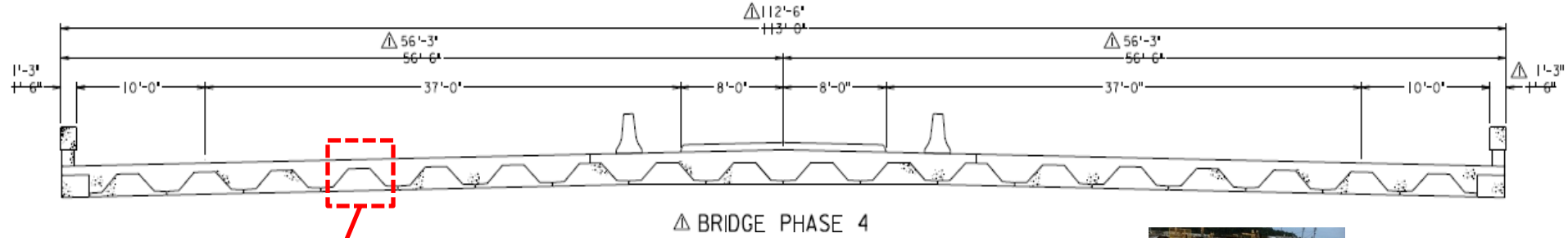

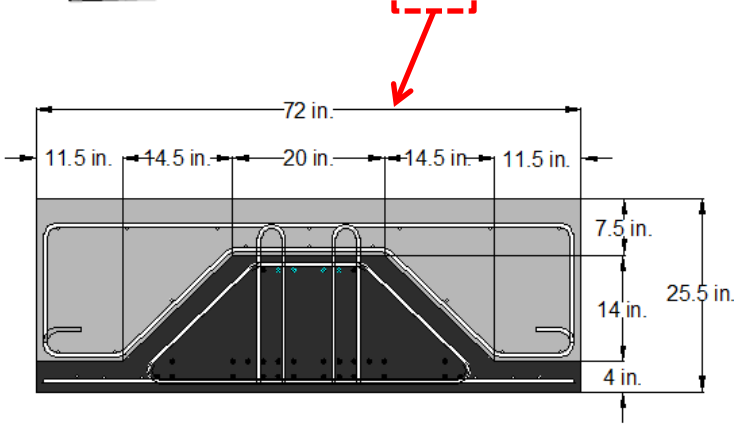

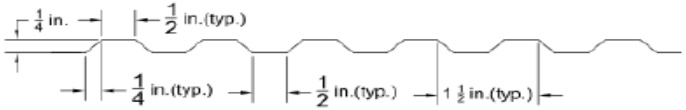

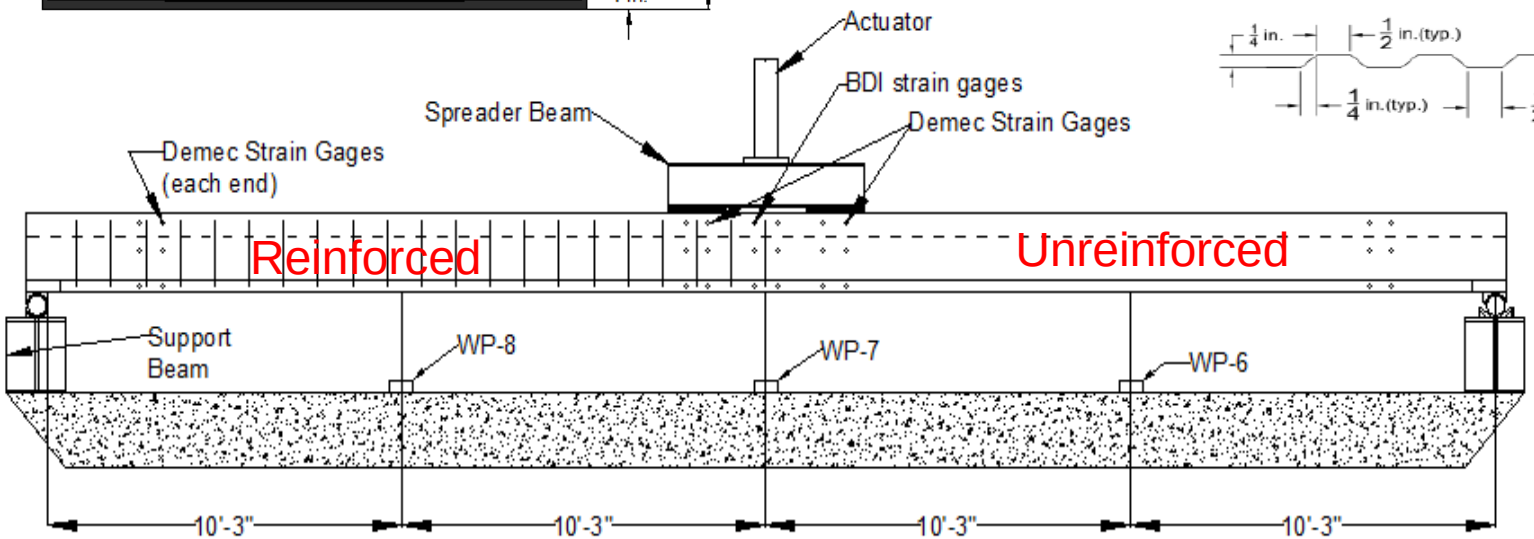

Test Plan – Four Tests

1

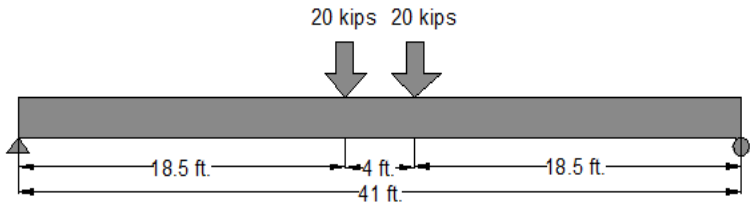

Loading to simulate $+M_{service}$ (no cracking)

2

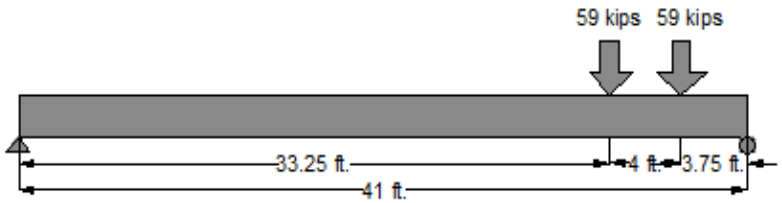

Loading to simulate V_u (no cracking)

3

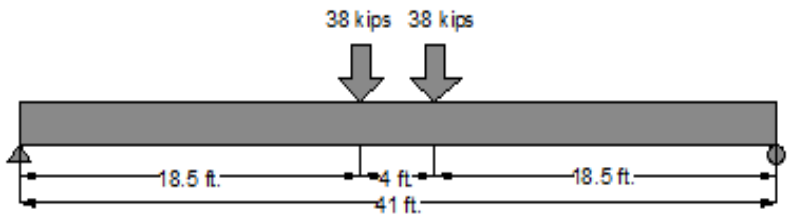

Loading to simulate $+M_u$ (beam should crack)

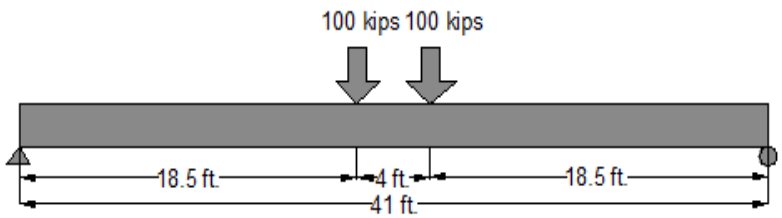

Loading to simulate ϕM_n (beam should fail)

Simulation of Strength Level Design Moment and Nominal Moment Capacity

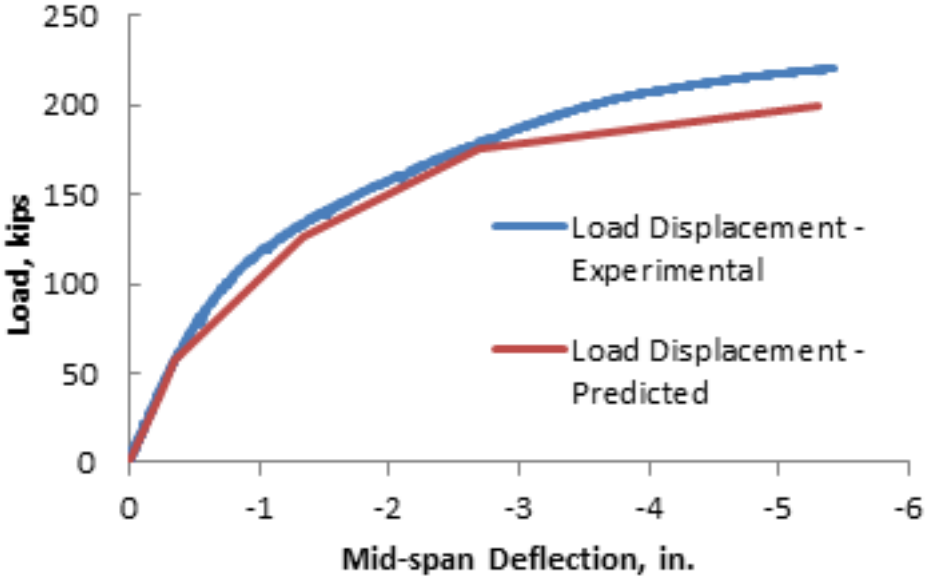

No Measured Slip

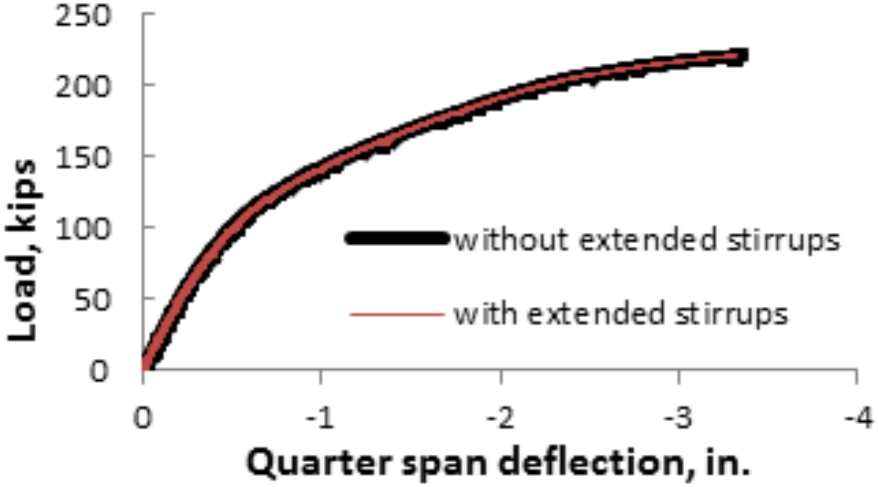

Recommendations for US 360 Bridge Implementation

Recommendations

Use Tapered Web Cross Section with steel as shown

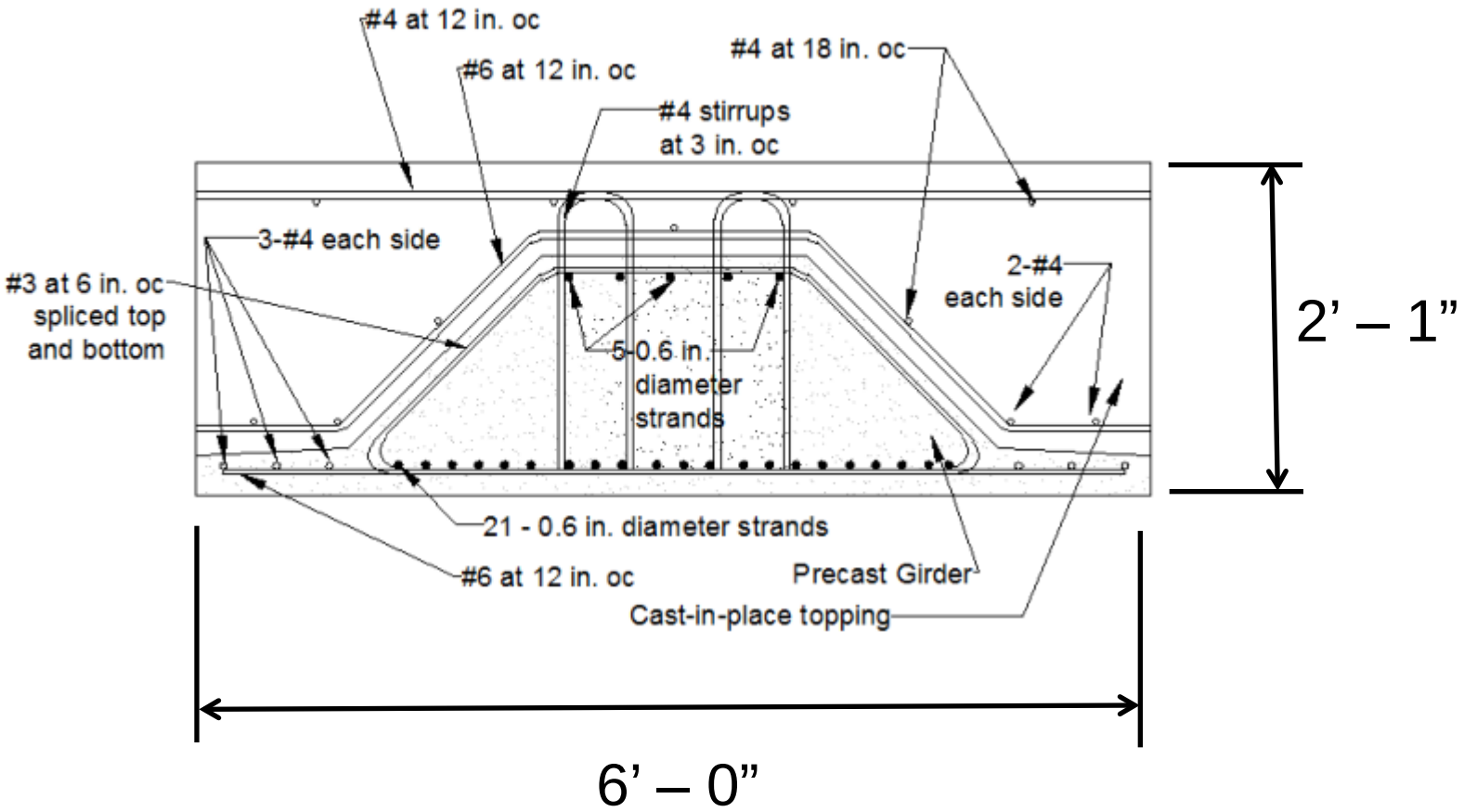

Recommendations

Use welded drop-in bar at 2 feet on center along girder length (for high volume bridges)

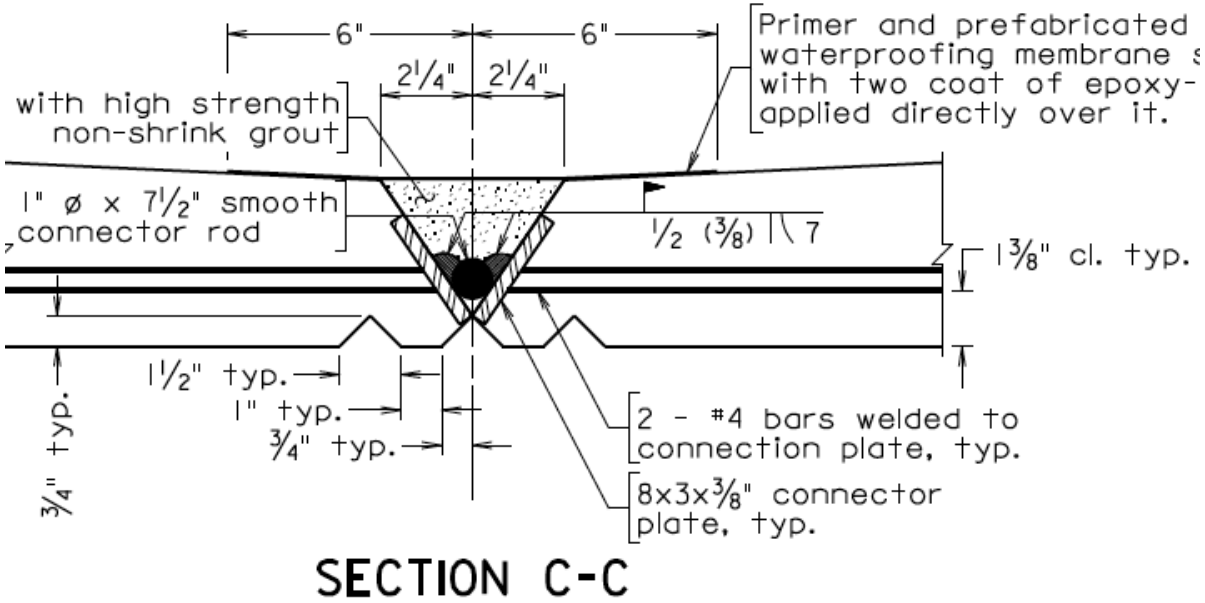

Recommendations

- **Mix Design for the Deck -** Specify a topping mix with low shrinkage and high creep
- **Bearing Details at the Abutments**
- **End Zone Reinforcement**
- **Continuity Detail**

Recommendations

Provide horizontal shear transfer reinforcement and roughen interface. Roughening the precast webs and the precast flanges in the longitudinal direction while providing a transverse rake finish at the top of the precast web appears to provide the necessary cohesion for full composite action.

Recommendations

Horizontal shear reinforcement not needed

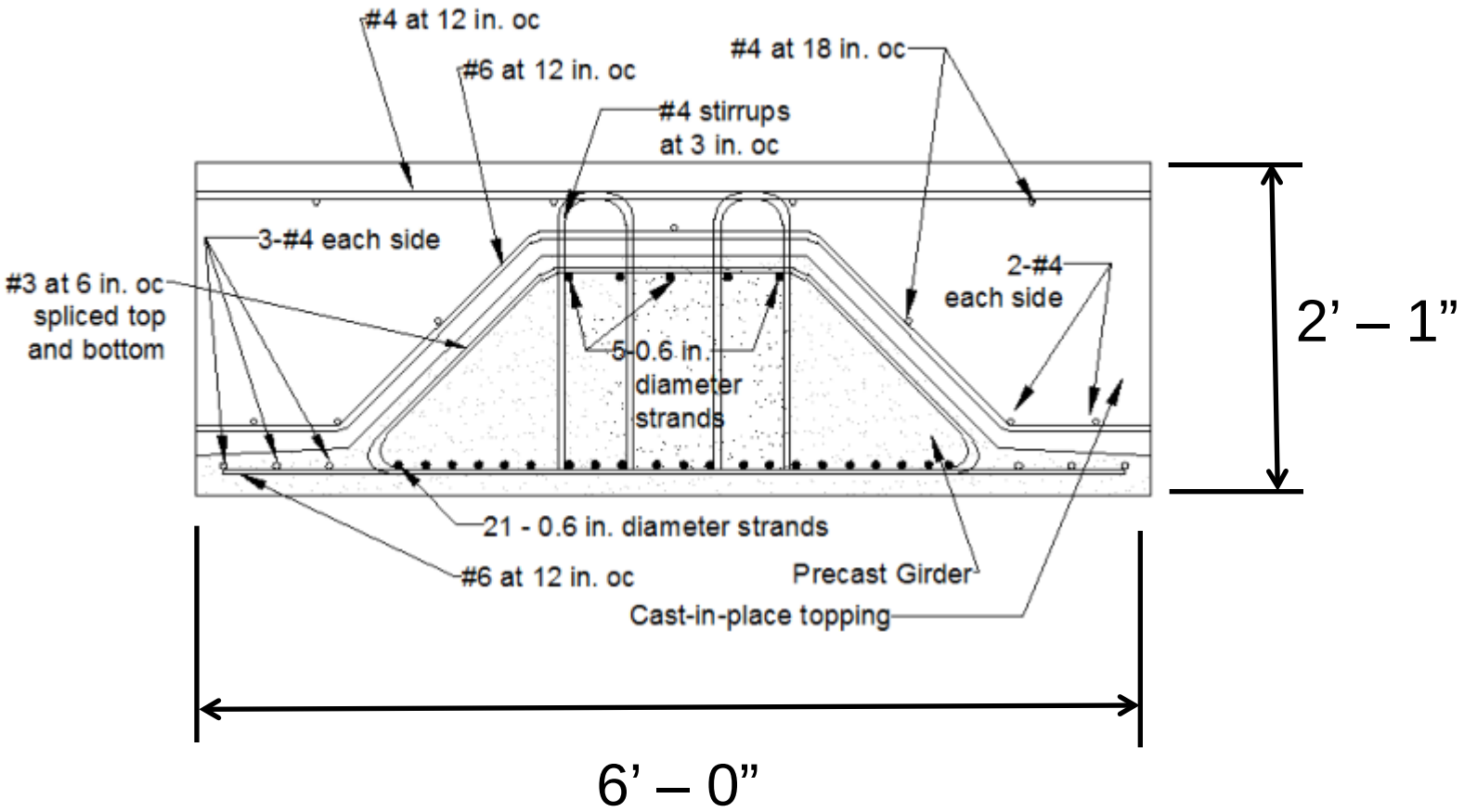

Field Evaluation

Demonstration Bridge on US 360

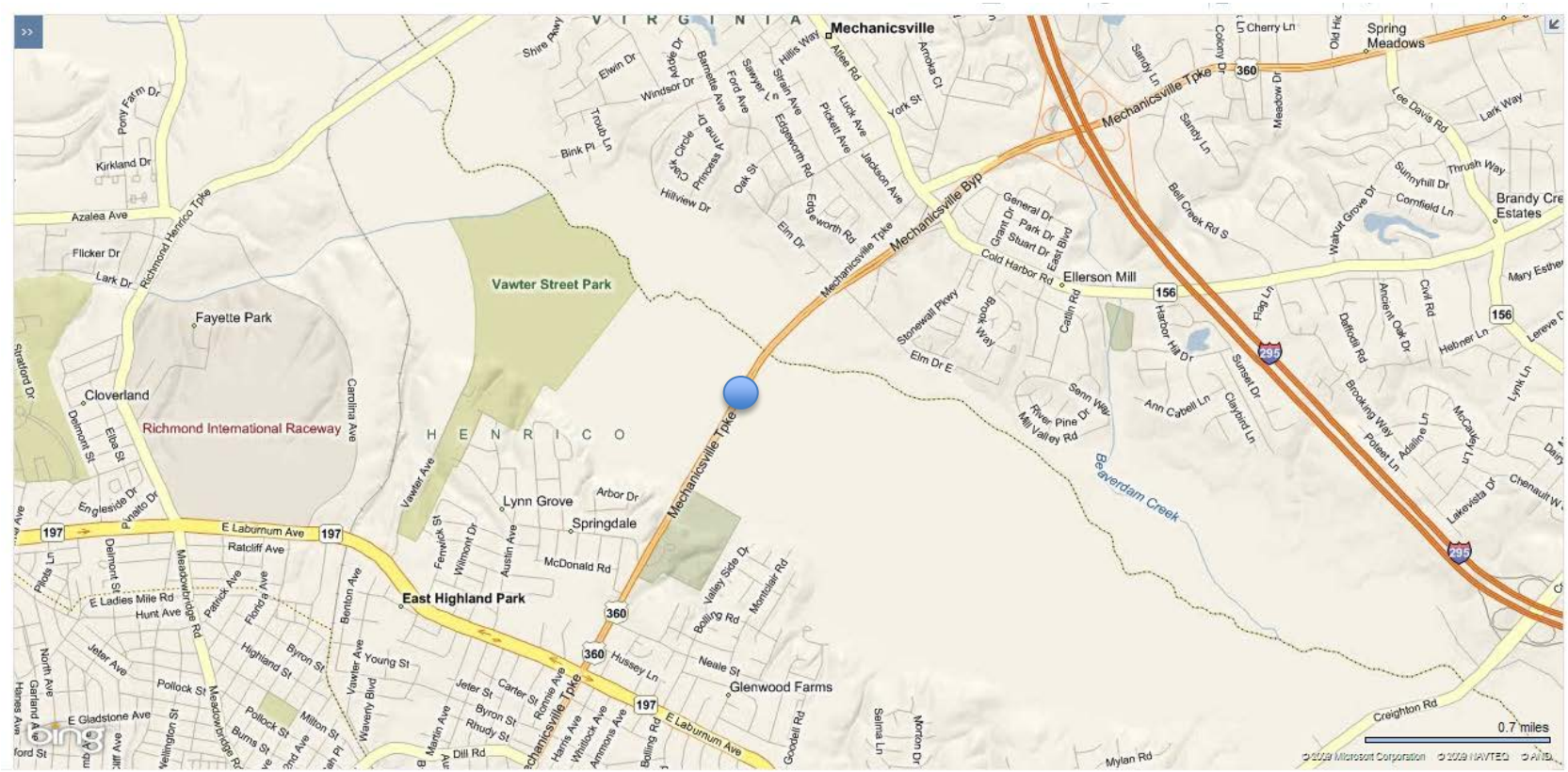

Overview

Two-span continuous bridge

Each span 43 feet

Precast Inverted T-beam

depth = 18 in.

CIP topping depth = 7.5 in.

Clear width = 110 feet

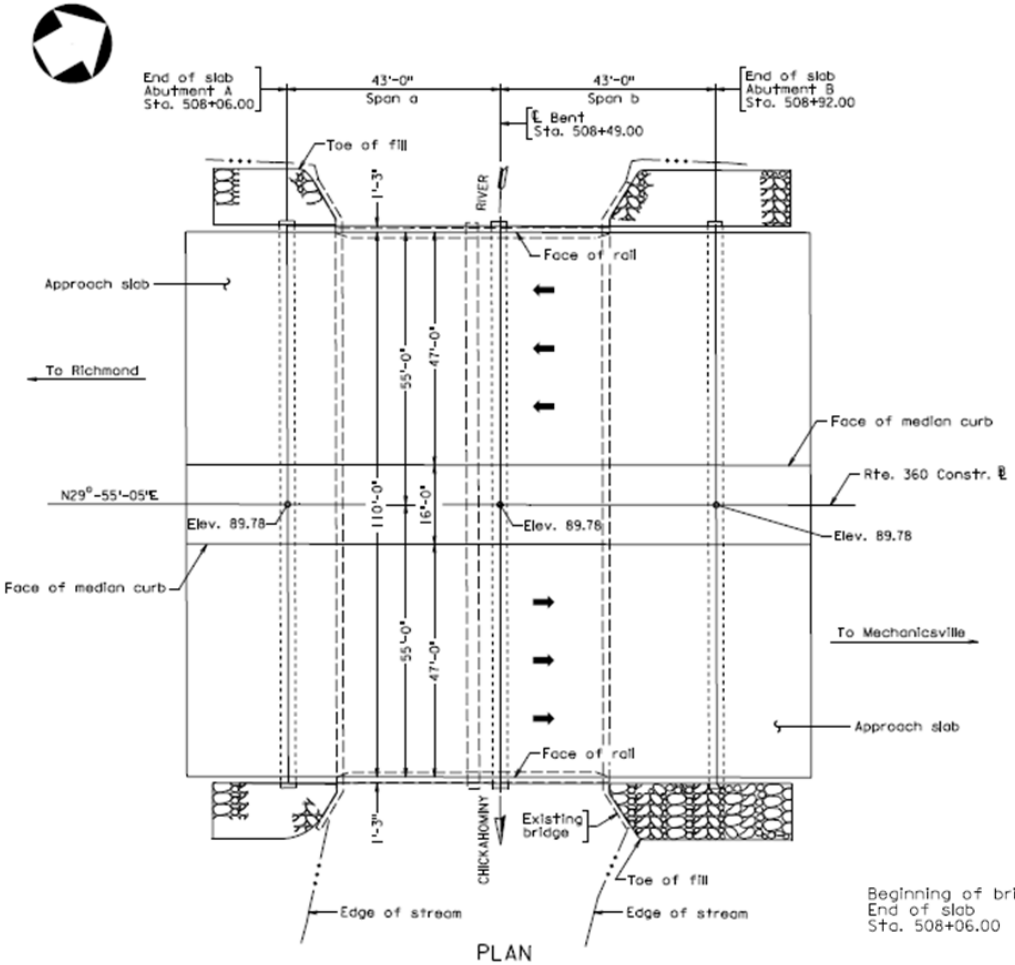

Plan View

(Source VDOT drawings)

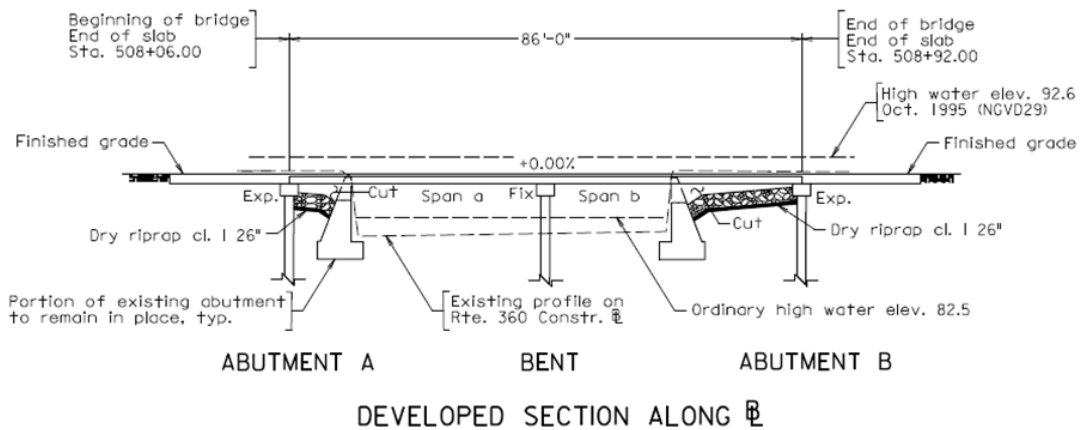

Elevation (Source VDOT drawings)

Construction Phases for US 360 Bridge

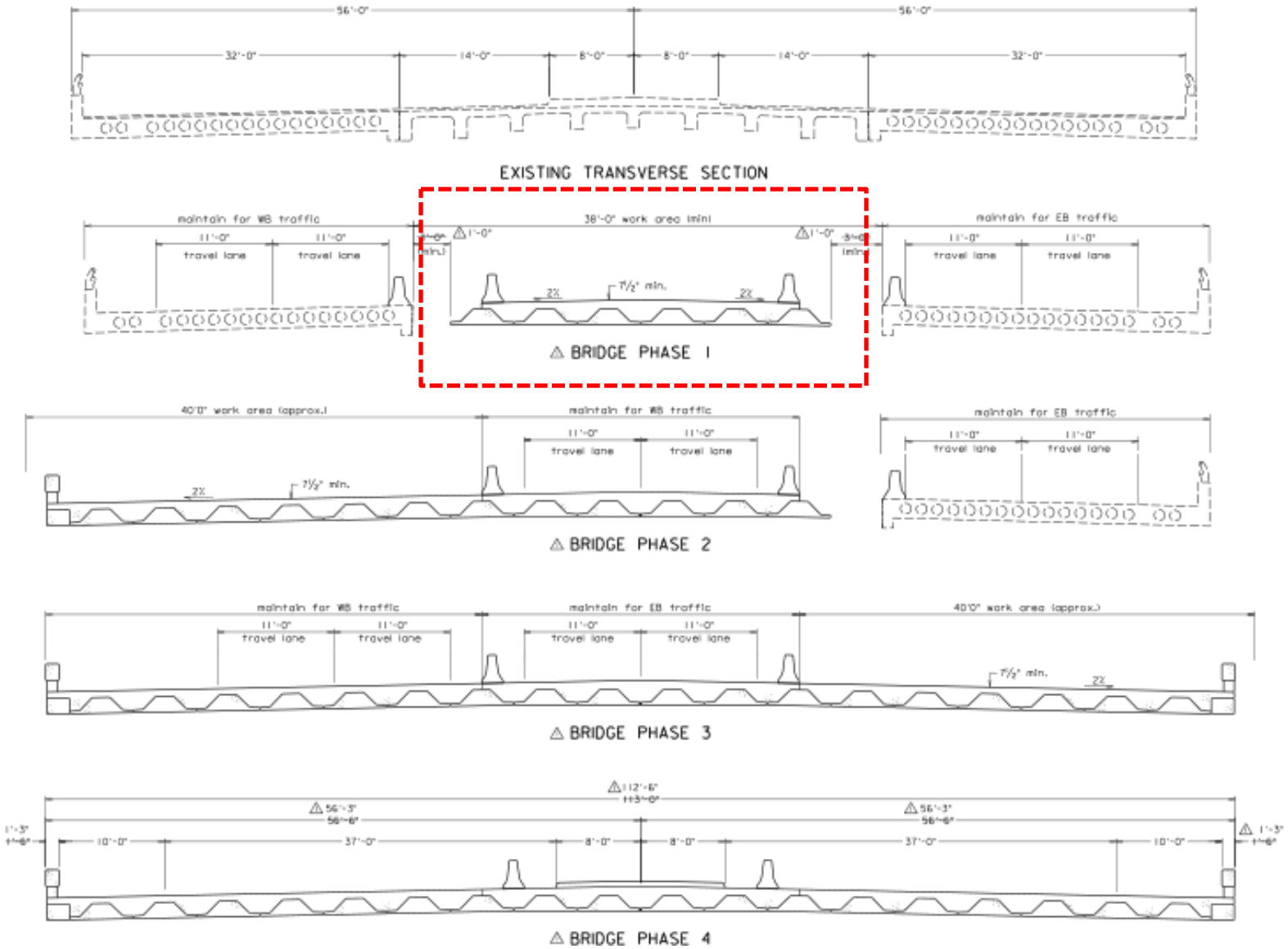

Objectives

- Quantify LLDF for the Inverted T-beam system
  - Investigate the applicability of AASHTO's method for cast-in-place slab span bridge
  - Investigate the applicability of AASHTO's method for adjacent box structure systems
- Confirm that bridge is behaving as expected

Results - Strains

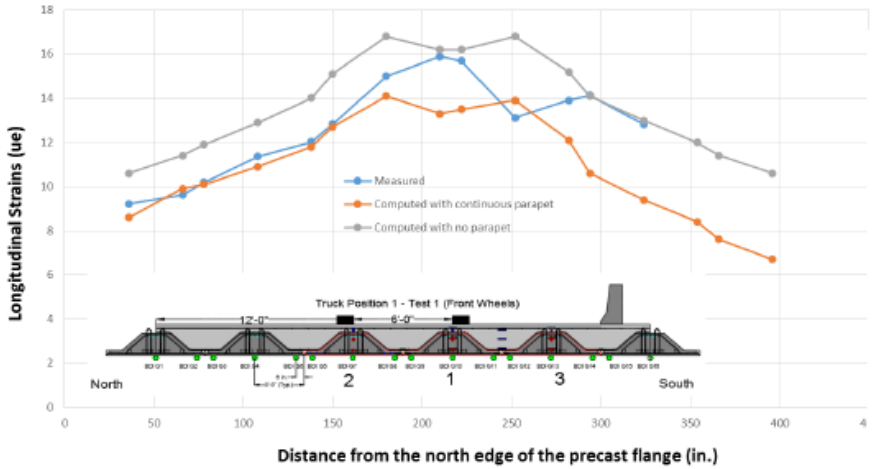

Figure 8.14. Longitudinal strains in each girder – Truck Position 1

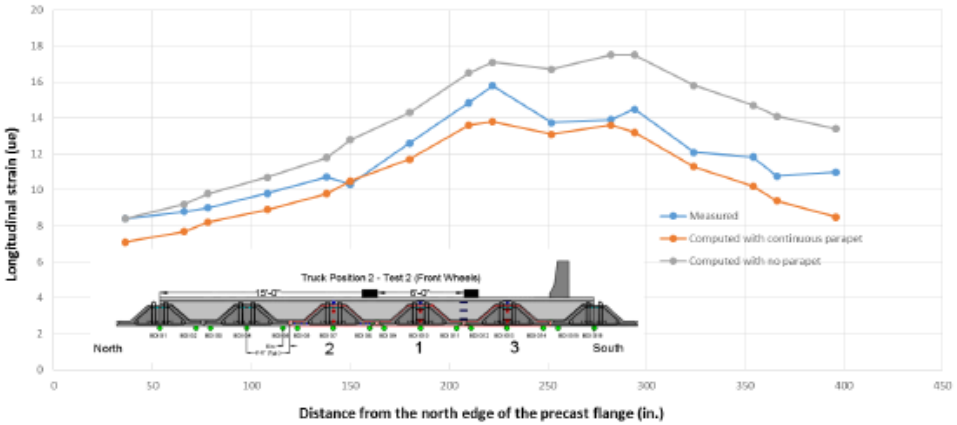

Figure 8.15. Longitudinal strains in each girder – Truck Position 2

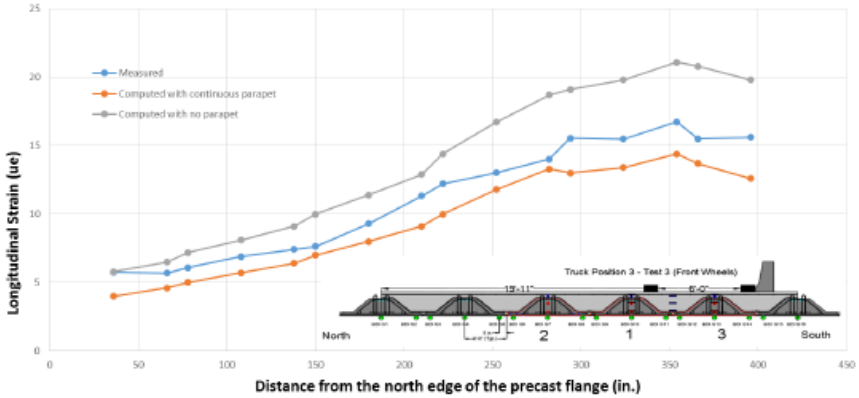

Figure 8.16. Longitudinal strains in each girder – Truck Position 3

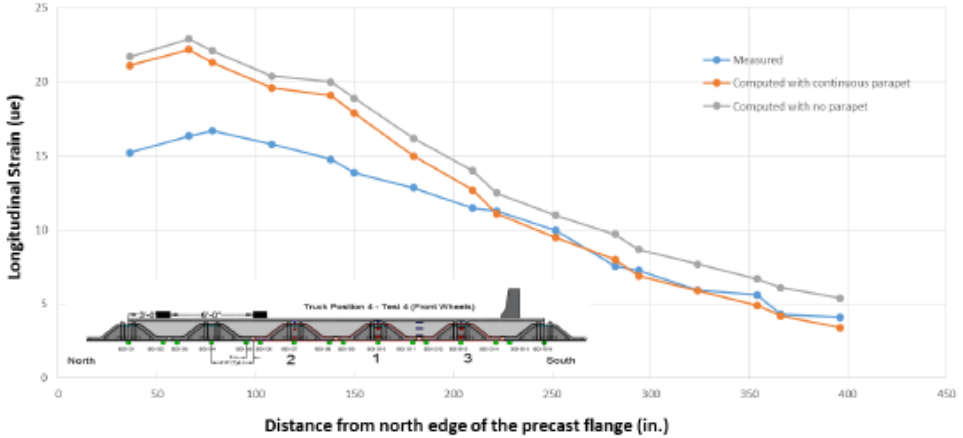

Figure 8.17. Longitudinal strains in each girder – Truck Position 4

Results - LLDFs

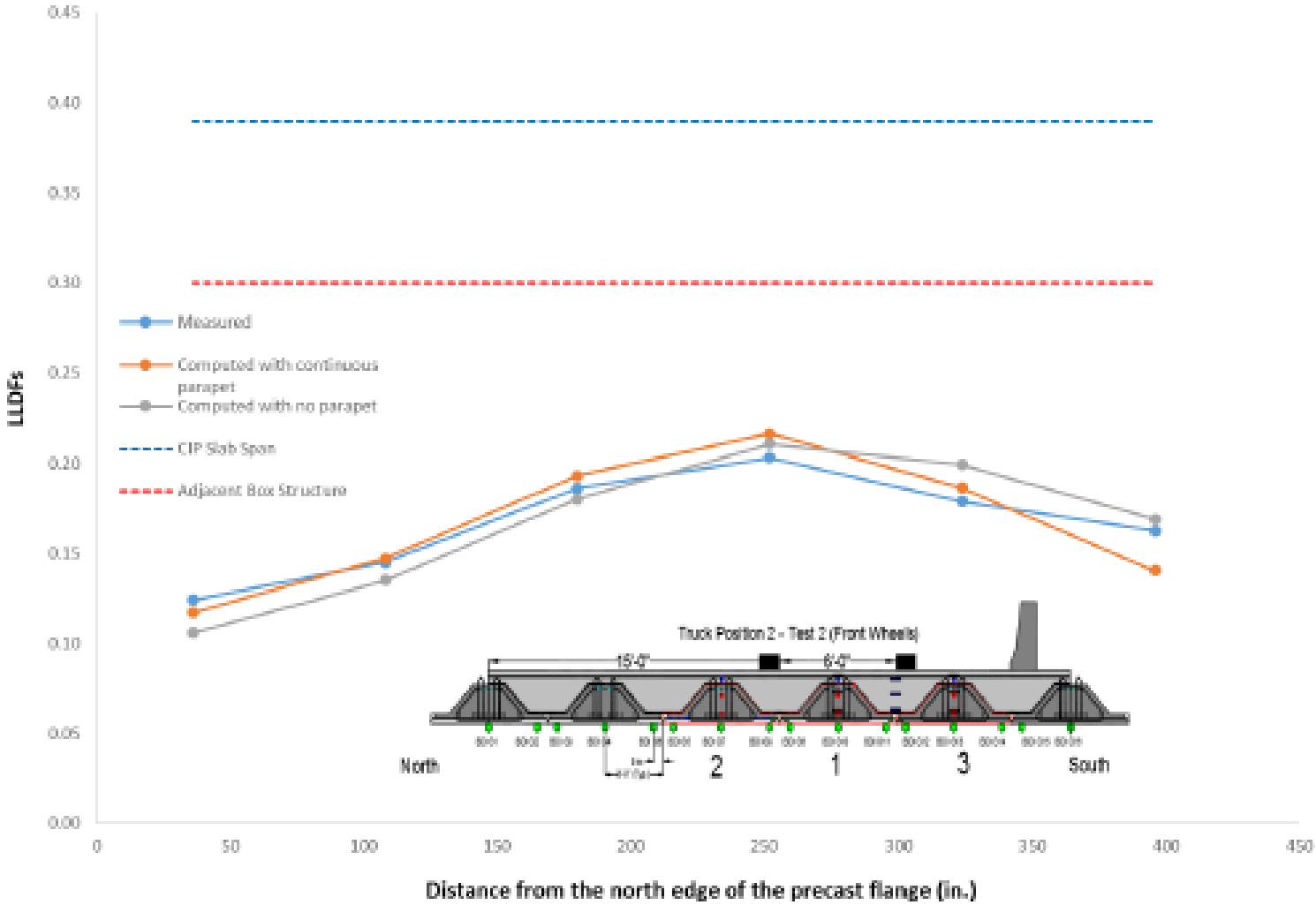

Live Load Distribution Factors

- AASHTO's method for cast-in-place slab span bridges is conservative for moment and shear and can be used in the design of inverted T-beam bridges
- AASHTO's method for adjacent box structures is conservative for moment and extremely conservative for shear
- **Recommendation: Use AASHTO cast-in-place slab span equations for LDF**

Table 8.5. Live Load Distribution Factors (Moment) – Including Multiple Presence Effect

One Design Lane Loaded	LLDF				
	Adjacent Inverted T-beams with tapered webs			Cast-in-place slab spans	Adjacent voided/box structures
	Measured	Computed with Continuous parapet	Computed with no parapet		
Truck Position 1+4	NC*	0.22	0.20		
Truck Position 2+4	0.19	0.21	0.19		
Truck Position 3+4	0.18	0.19	0.17	**0.52**	**0.47**
One Lane Max.*Multiple Presence Factor	0.30	0.34	0.31		
Max.	**0.30**	**0.34**	**0.31**		

Table 8.7. Live Load Distribution Factors (Shear) – Including Multiple Presence Effect

One Design Lane Loaded	LLDF			
	Adjacent Inverted T-beams with tapered webs		Cast-in-place slab spans	Adjacent voided/box structures
	Computed with Continuous parapet	Computed with no parapet		
Truck Position 1+4	0.27	0.26		
Truck Position 2+4	0.24	0.24		
Truck Position 3+4	0.22	0.21	**0.52**	**0.86**
One Lane Max.*Multiple Presence Factor	0.42	0.41		
Max.	**0.42**	**0.41**		

Questions?