1

A Study of the Effects of Placing a Lightweight Concrete Deck on Prestressed Girders Designed for a Normal Weight Concrete Deck

2015 Virginia Concrete Conference
March 6, 2015 - Richmond, VA

Reid W. Castrodale, PhD, PE
Carolina Stalite Company
Salisbury, NC

2

Why Replace a NWC Deck with a LWC Deck?

Reason #1

Lightweight concrete (LWC) is usually used to reduce dead load

- Improve the load rating of existing structures
- Allow widening of a bridge deck with little or no strengthening of the existing structure

Why Replace a NWC Deck with a LWC Deck?

3

Reason #2

LWC decks generally have less early age cracking and improved durability compared to NWC decks

- LWC is one of several contractor options for reducing deck cracking for VDOT
- Change in deck concrete could be made at the contractor's option after the bid

Purpose of Investigation

4

Study the effect of changing a NWC deck to a LWC deck on various design parameters

- Only PS concrete girders are considered

This study is applicable to

- Rehabilitation projects where a NWC deck is being replaced
- New projects where LWC may be substituted for NWC to improve the durability and service life of the deck

Concern

5

Placing a LWC deck on girders designed for a NWC deck might reduce the capacity or rating of the structure

Basis for concern:

- Modulus of elasticity for LWC is generally less than for NWC
  - Stiffness of the bridge would be reduced
  - Stresses and other performance-related quantities would be increased

This study evaluates validity of concern

Main Parameters Affected by Change

6

- Material properties
- Composite section properties
- Live load distribution factors
- Design moments and shears
- Prestress losses and effective prestress
- Service load concrete stresses
- Flexure and shear strength
- Cambers and deflections
- Inventory & operating ratings – flex. & shear

Design Comparisons

7

Initial design

- Prestressed girder with a NWC deck

Comparative designs

- Change deck to sand LWC & all LWC
- Repeat design calculations
- No modifications were made to the original girder design
  - Concrete strengths & strand pattern from design with NWC deck were used for designs with LWC deck

Design Comparisons

8

Short, medium & long <u>simple</u> spans

Four girder types

Constant width of bridge deck

Compressive strength of girders vary

More details available

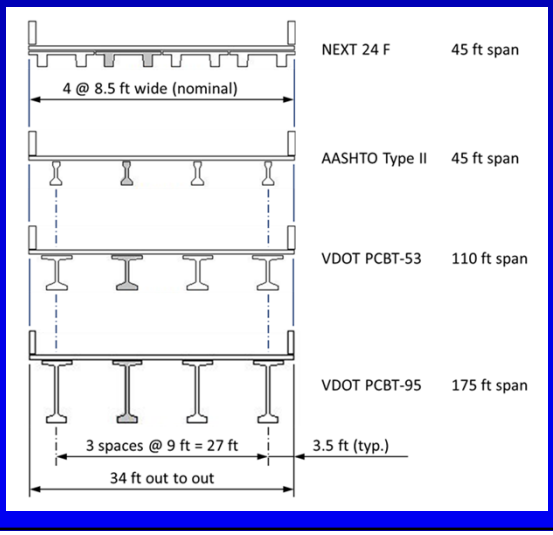

Concrete Densities used for Deck

9

All LWC	Sand LWC	NWC
100 pcf	115 pcf	145 pcf
LW Fine	NW Fine	NW Fine
LW Coarse	LW Coarse	NW Coarse

Concrete densities shown are examples

Sand LWC is most common type of LWC

For dead load, add 5 pcf allowance for reinf.

10

RESULTS

Modulus of Elasticity

11

Span & Girder Type	Deck Concrete Type	Mod. of Elasticity Girder (ksi)	Mod. of Elasticity Deck (ksi)	Modular Ratio, n	LWC / NWC Ratio
45 ft NEXT 24 F	NWC	4,463	3,644	0.816	1.000
	SLWC	4,463	2,574	0.577	0.706
	ALWC	4,463	2,087	0.468	0.573
45 ft Type II	NWC	5,154	3,644	0.707	1.000
	SLWC	5,154	2,574	0.499	0.706
	ALWC	5,154	2,087	0.405	0.573
110 ft PCBT-53	NWC	5,154	3,644	0.707	1.000
	SLWC	5,154	2,574	0.499	0.706
	ALWC	5,154	2,087	0.405	0.573
175 ft PCBT-93	NWC	5,762	3,644	0.632	1.000
	SLWC	5,762	2,574	0.447	0.706
	ALWC	5,762	2,087	0.362	0.573

Decrease is significant and constant for all designs

Composite Section Properties

12

Span & Girder Type	Deck Concrete Type	Composite Area (in^2)	Centroid from Bottom (in.)	Composite Moment of Inertia (in^4)	LWC / NWC Ratio	
45 ft NEXT 24 F	NWC	1,664	20.12	127,724	1.000	
	SLWC	1,468	19.07	112,925	0.884	
	ALWC	1,379	18.50	104,902	0.821	
45 ft Type II	NWC	990	30.67	193,924	1.000	
	SLWC	810	28.60	173,883	0.897	
	ALWC	729	27.33	161,658	0.834	
110 ft PCBT-53	NWC	1,445	38.68	683,777	1.000	
	SLWC	1,266	36.09	614,100	0.898	
	ALWC	1,184	34.65	575,520	0.842	
175 ft PCBT-93	NWC	1,735	60.95	2,615,603	1.000	
	SLWC	1,574	57.07	2,358,658	0.902	0.706
	ALWC	1,501	55.03	2,223,673	0.850	0.573

Decrease is still significant but much less than for E_c

Composite Section Properties

13

Span & Girder Type	Deck Concrete Type	Section Modulus, Top Deck (in^3)	Section Modulus, Top Girder (in^3)	Section Modulus, Bot Girder (in^3)	LWC / NWC Ratio		
45 ft NEXT 24 F	NWC	13,172	32,954	6,347	1.000		
	SLWC	15,149	22,926	5,920	0.933		
	ALWC	16,615	19,067	5,671	0.893		
45 ft Type II	NWC	20,572	36,374	6,323	1.000		
	SLWC	22,611	23,504	6,079	0.961	0.902	
	ALWC	23,939	18,636	5,916	0.936	0.850	
110 ft PCBT-53	NWC	43,334	47,765	17,676	1.000		
	SLWC	49,359	36,313	17,016	0.963	0.902	
	ALWC	53,928	31,360	16,611	0.940	0.850	
175 ft PCBT-93	NWC	98,342	76,808	42,916	1.000		
	SLWC	114,951	62,179	41,332	0.963	0.902	0.706
	ALWC	127,968	55,630	40,410	0.942	0.850	0.573

Decrease is even less than for I_c … and E_c

Dead, Live & Service Load Moment

14

Span & Girder Type	Deck Concrete Type	Deck Dead Load Moment (k ft)	Total Dead Load Moment (k ft)	Live Load + Impact Moment (k ft)	Total Service Load Moment (k ft)
45 ft NEXT 24 F	NWC	206	530	625	1,155
	SLWC	165	489	645	1,134
	ALWC	144	468	657	1,125
45 ft Type II	NWC	218	388	672	1,060
	SLWC	174	344	693	1,037
	ALWC	153	323	707	1,030
110 ft PCBT-53	NWC	1,337	3,052	2,275	5,327
	SLWC	1,069	2,785	2,347	5,132
	ALWC	936	2,651	2,391	5,042
175 ft PCBT-93	NWC	3,406	9,134	4,511	13,645
	SLWC	2,725	8,453	4,654	13,107
	ALWC	2,384	8,112	4,742	12,854

- Dead load moments decreased
- Live load moment increased slightly
- Total service load moment reduced

Dead, Live & Service Load Moment

15

Span & Girder Type	Deck Concrete Type	Deck Dead Load Moment/ Total Dead Load Moment	Deck Dead Load Moment/ Total Serv. Load Moment	Live Load Moment / Total Service Load Moment
45 ft NEXT 24 F	NWC	38.8%	17.8%	54.1%
	SLWC	33.7%	14.5%	56.9%
	ALWC	30.7%	12.8%	58.4%
45 ft Type II	NWC	56.1%	20.5%	63.4%
	SLWC	50.6%	16.8%	66.8%
	ALWC	47.3%	14.8%	68.7%
110 ft PCBT-53	NWC	43.8%	25.1%	42.7%
	SLWC	38.4%	20.8%	45.7%
	ALWC	35.3%	18.6%	47.4%
175 ft PCBT-93	NWC	37.3%	25.0%	33.1%
	SLWC	32.2%	20.8%	35.5%
	ALWC	29.4%	18.5%	36.9%

- Deck portion of total dead & service load moments reduced
- Live load fraction of total service load moment increased

Dead, Live & Service Load Shear

16

Span & Girder Type	Deck Concrete Type	Deck Dead Load Shear (kips)	Total Dead Load Shear (kips)	Live Load + Impact Shear (kips)	Total Service Load Shear (kips)
45 ft NEXT 24 F	NWC	16.8	43.3	70.5	113.8
	SLWC	13.4	39.9	70.5	110.4
	ALWC	11.7	38.2	70.5	108.7
45 ft Type II	NWC	17.1	30.5	71.5	102.0
	SLWC	13.7	27.1	71.5	98.6
	ALWC	12.0	25.4	71.5	96.9
110 ft PCBT-53	NWC	45.5	103.8	102.4	206.2
	SLWC	36.4	94.7	102.4	197.1
	ALWC	31.8	90.1	102.4	192.5
175 ft PCBT-93	NWC	72.4	194.3	122.3	316.6
	SLWC	58.0	179.9	122.3	302.2
	ALWC	50.7	172.6	122.3	294.9

- Dead load shear decreased
- No effect on live load shear
- Total service load shear reduced

Dead, Live & Service Load Shear

17

Span & Girder Type	Deck Concrete Type	Deck Dead Load Shear/ Total Dead Load Shear	Deck Dead Load Shear/ Total Serv. Load Shear	Live Load Shear / Total Service Load Shear
45 ft NEXT 24 F	NWC	38.8%	14.8%	62.0%
	SLWC	33.6%	12.1%	63.9%
	ALWC	30.6%	10.8%	64.9%
45 ft Type II	NWC	56.1%	16.8%	70.1%
	SLWC	50.6%	13.9%	72.5%
	ALWC	47.2%	12.4%	73.8%
110 ft PCBT-53	NWC	43.8%	22.1%	49.7%
	SLWC	38.4%	18.5%	52.0%
	ALWC	35.3%	16.5%	53.2%
175 ft PCBT-93	NWC	37.3%	22.9%	38.6%
	SLWC	32.2%	19.2%	40.5%
	ALWC	29.4%	17.2%	41.5%

- Deck portion of dead & service load shear reduced
- Live load portion of total service load shear increased

Prestress Loss

18

Span & Girder Type	Deck Concrete	Total Prestress Loss (ksi)	Change in PS Loss Compared to NWC	Effective Prestress (ksi)	Change in Effect. PS Compared to NWC
45 ft NEXT 24 F	NWC	18.39	0.0%	184.11	0.0%
	SLWC	19.08	3.7%	183.42	-0.4%
	ALWC	19.34	5.2%	183.16	-0.5%
45 ft Type II	NWC	18.47	0.0%	184.04	0.0%
	SLWC	18.98	2.8%	183.52	-0.3%
	ALWC	19.21	4.0%	183.29	-0.4%
110 ft PCBT-53	NWC	18.97	0.0%	183.53	0.0%
	SLWC	20.37	7.4%	182.13	-0.8%
	ALWC	21.00	10.7%	181.50	-1.1%
175 ft PCBT-93	NWC	16.87	0.0%	185.63	0.0%
	SLWC	18.27	8.3%	184.23	-0.8%
	ALWC	18.92	12.2%	183.58	-1.1%

- PS loss increased
- Effect. PS decreased but much less

Serv. Load Stress at Midspan - Bottom

19

Span & Girder Type	Deck Concrete	Deck Dead Load (ksi)	Live Load + Impact (ksi)	0.80 x Live Load + Impact (ksi)	Full Dead Load + Prestress (ksi)	LWC / NWC Ratio
45 ft NEXT 24 F	NWC	-0.664	-1.181	-0.945	0.642	1.000
	SLWC	-0.531	-1.307	-1.046	0.754	1.174
	ALWC	-0.465	-1.390	-1.112	0.808	1.259
45 ft Type II	NWC	-0.790	-1.275	-1.020	0.746	1.000
	SLWC	-0.632	-1.369	-1.095	0.894	1.198
	ALWC	-0.553	-1.433	-1.146	0.967	1.296
110 ft PCBT-53	NWC	-1.245	-1.544	-1.235	0.730	1.000
	SLWC	-0.996	-1.655	-1.324	0.950	1.301
	ALWC	-0.872	-1.728	-1.382	1.057	1.448
175 ft PCBT-93	NWC	-1.218	-1.261	-1.009	0.722	1.000
	SLWC	-0.975	-1.351	-1.081	0.935	1.295
	ALWC	-0.853	-1.408	-1.126	1.040	1.440

Stress is greater at full dead load

Compare Serv. Load Stress & Allowable

20

Span & Girder Type	Deck Concrete	Full Service Load Stress (ksi)	Allowable Tensile Stress (ksi)	Full SL Stress as % of Allowable	LWC / NWC Ratio
45 ft NEXT 24 F	NWC	-0.303	-0.465	65.1%	1.000
	SLWC	-0.291	-0.465	62.5%	0.960
	ALWC	-0.304	-0.465	65.3%	1.003
45 ft Type II	NWC	-0.274	-0.537	51.0%	1.000
	SLWC	-0.201	-0.537	37.4%	0.734
	ALWC	-0.180	-0.537	33.5%	0.657
110 ft PCBT-53	NWC	-0.505	-0.537	94.0%	1.000
	SLWC	-0.374	-0.537	69.6%	0.741
	ALWC	-0.325	-0.537	60.5%	0.644
175 ft PCBT-93	NWC	-0.287	-0.601	47.8%	1.000
	SLWC	-0.146	-0.601	24.3%	0.509
	ALWC	-0.087	-0.601	14.5%	0.303

- Full service stress is smaller fraction of allowable stress

… except for NEXT Beam

Flexural Strength

21

Span & Girder Type	Deck Concrete	Factored Moment, M_u (k ft)	Factored Flexural Resistance M_r (k ft)	Ratio: M_r / M_u
45 ft NEXT 24 F	NWC	1,763	1,810	1.03
	SLWC	1,746	1,810	1.04
	ALWC	1,742	1,810	1.04
45 ft Type II	NWC	1,668	1,701	1.02
	SLWC	1,651	1,701	1.03
	ALWC	1,647	1,701	1.03
110 ft PCBT-53	NWC	7,839	8,041	1.03
	SLWC	7,631	8,041	1.05
	ALWC	7,542	8,041	1.07
175 ft PCBT-93	NWC	19,421	21,850	1.13
	SLWC	18,820	21,850	1.16
	ALWC	18,549	21,850	1.18

- Factored moment was reduced
- Flexural resistance unaffected
- Moment ratio is increased

Shear Strength

22

Span & Girder Type	Deck Concrete	Factored Shear, V_u (ksi)	Concrete Shear Contrib., V_c (ksi)	Required Steel Shear Contrib., V_s
45 ft NEXT 24 F	NWC	178.0	237.0	0.0
	SLWC	173.8	237.6	0.0
	ALWC	171.7	237.9	0.0
45 ft Type II	NWC	163.8	72.5	109.6
	SLWC	159.6	74.0	103.2
	ALWC	157.4	74.8	100.1
110 ft PCBT-53	NWC	310.5	106.1	238.8
	SLWC	299.1	108.9	223.5
	ALWC	293.4	110.2	215.8
175 ft PCBT-93	NWC	459.2	322.3	164.5
	SLWC	441.1	327.3	139.3
	ALWC	432.0	329.8	126.8

- Factored shear was reduced by using LWC
- Concrete shear contribution was increased by using LWC
- Where required, shear reinf. was reduced by using LWC

Camber and Deflections

23

Span & Girder Type	Deck Concrete	Final Camber (in.)	Live Load Deflection (in.)	Total Deflection (in.)
45 ft NEXT 24 F	NWC	1.02	-0.38	0.63
	SLWC	1.07	-0.45	0.62
	ALWC	1.10	-0.49	0.60
45 ft Type II	NWC	0.46	-0.23	0.23
	SLWC	0.52	-0.27	0.25
	ALWC	0.55	-0.30	0.25
110 ft PCBT-53	NWC	1.79	-1.34	0.44
	SLWC	2.11	-1.55	0.56
	ALWC	2.26	-1.68	0.58
175 ft PCBT-93	NWC	1.08	-1.58	-0.50
	SLWC	1.49	-1.81	-0.31
	ALWC	1.70	-1.95	-0.26

- Camber always increased
- Live load deflection always increased
- Total defl. was usually more positive

Inventory Ratings

24

Service Load – Tensile Stress

- All ratings > 1
- Trends vary

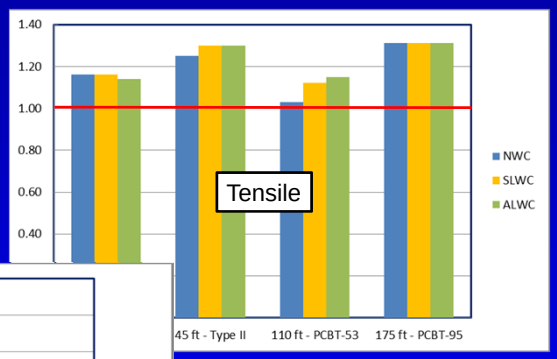

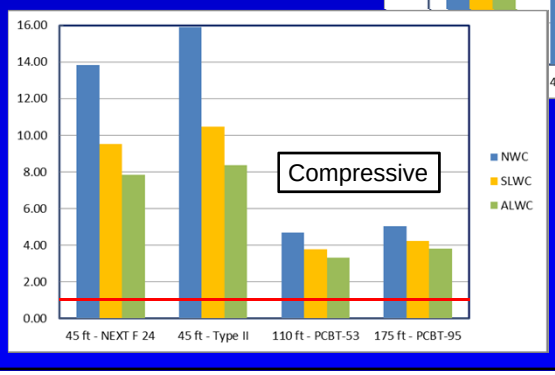

Service Load – Compressive Stress

- All ratings >> 1
- Trends similar

Operating Ratings

25

Strength – Flexure

Operating Rating trends were very similar – increasing with LWC

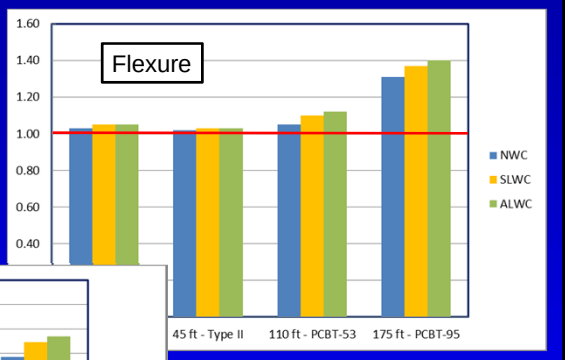

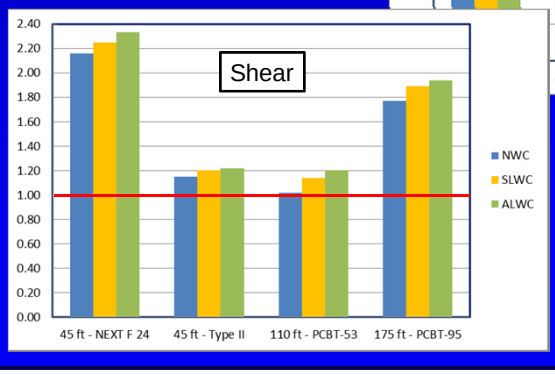

Strength – Shear

Conclusions (1)

26

The study demonstrates that when prestressed concrete girders were designed to be composite with a NWC deck:

Replacing the deck with a LWC deck could be done without significant changes to the structural performance of the bridge

- Applies to both sand LWC and all LWC

Conclusions (2)

27

Changes in material and composite section properties caused by the change in deck concrete type were relatively large

But the effect on more significant design parameters were moderate and were generally improved, such as

- Concrete stresses
- Flexural and shear strength
- Camber and deflections

Conclusions (3)

28

For all six rating factors considered:

The change in deck concrete produced either a minor effect, or the rating factors were improved

Conclusions (4)

29

The results provide a basis for designers to allow a change in deck concrete type from NWC to LWC

- to obtain improved structural efficiency or
- to enhance durability

without major concerns about the effect of the change on the design and performance of the bridge

Conclusions (5)

30

The results of this study may be convincing.

However, the author recommends that bridge designers make their own investigation of the consequences of changing the type of deck concrete using design parameters and loads specific to the bridge for which the change is being considered

31

Acknowledgements

Support for the development of this paper was provided by the Expanded Shale, Clay and Slate Institute (ESCSI)

The PSBeam software (version 4.26) used to perform the design computations for this study was provided by Eriksson Technologies, Inc.