Showcase on

Virginia Fiber-Reinforced Polymer Composites: Materials, Design, and Construction

September 20-21, 2006, Bristol, Virginia

Introduction to FRP Composites

Aixi Zhou and Jack Lesko

Dept. of Engineering Science & Mechanics

Virginia Tech, Blacksburg, VA 24061-0219

Phone: (540) 231-3249 (540) 231-5259

Email: azhou@vt.edu jlesko@vt.edu

Outline

- **Constitutive materials**
  - Fibers
  - Resins (covered in Polymers & Adhesives for the Infrastructure)
- **Manufacturing of FRP composites**
- **Material behavior of FRP composites**
- **Design of FRP structural composites**

© Copyright, 2006, Zhou & Lesko, Virginia Tech

Glass Fibers

- **A-glass (alkali):** high-alkali (25% soda and lime), very good resistance to chemicals, lower electrical properties.
- **C-glass (chemical):** extremely high chemical resistance. Mainly used as surface tissue in the outer layer of in chemical/water pipes and tanks
- **E-glass (electrical):** low alkali, good electrical insulation and strong resistance to water (> 50% reinforcement is E-glass).
- **S-glass (strength):** 40-70% higher tensile strength than E-glass.
- **D-glass (dielectric):** low dielectric constant with superior electrical properties, mechanical properties are not as good as E-glass.

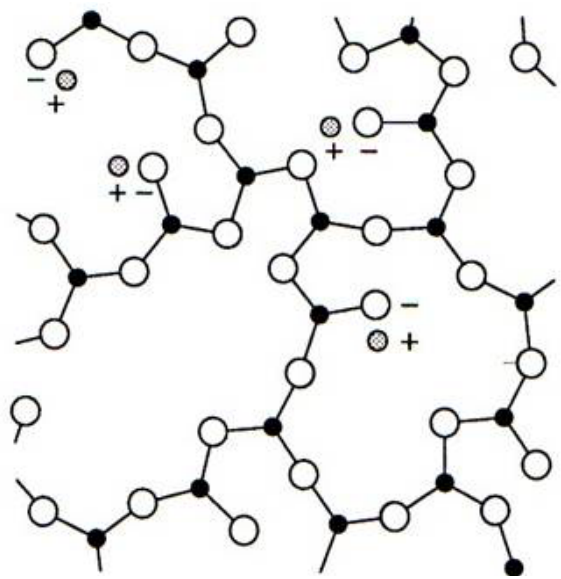

Oxygen
Silicon
Metallic elements

© Copyright, 2006, Zhou & Lesko, Virginia Tech

Carbon Fibers

- **PAN** (Polyacrylonitrile) **Type** : Produced by carbonization of PAN precursor, having high tensile strength and high elastic modulus specifically designed for structural composites.
- **Pitch Type**: Produced by carbonization of oil/coal pitch precursor, having high heat conductivity, electric conductivity, high tensile strength and high elastic modulus.

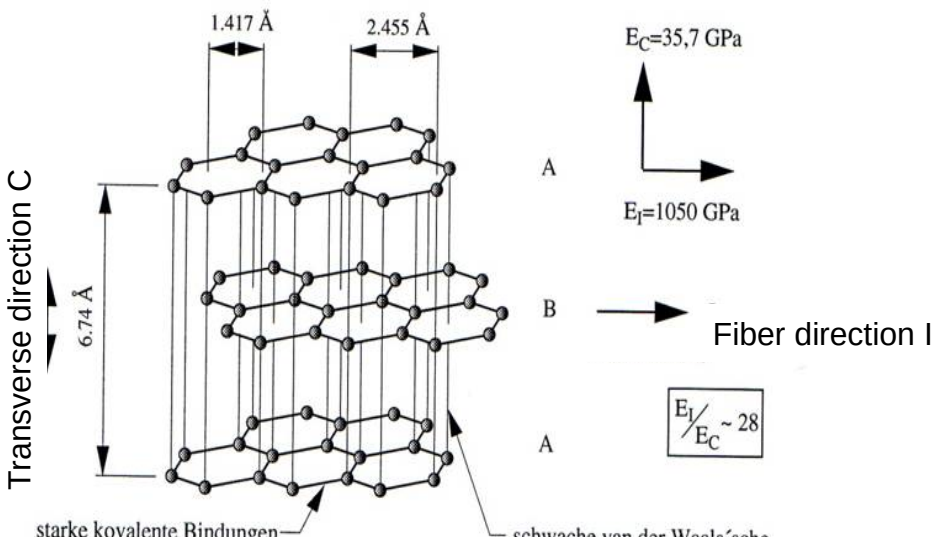

Strong covalent bond

Weak Van der Waals' bond

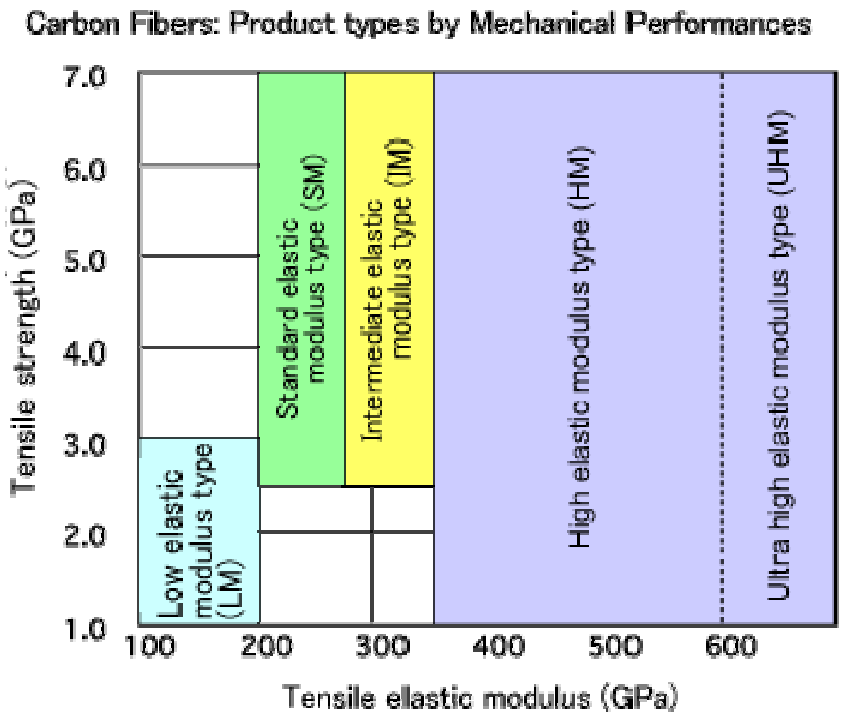

SP Composite Guide

© Copyright, 2006, Zhou & Lesko, Virginia Tech

Aramid Fibers

- Organic polymer by spinning a solid fiber from a liquid chemical blend
- High strength and low density
- Good resistance to impact (for ballistic applications)

Axial Radial Systems
(Stacked laminae)

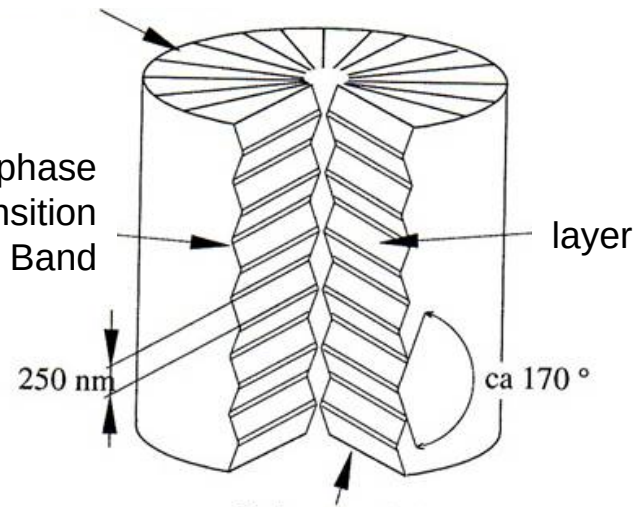

Polymer molecules parallel to
the arranged fiber axis

© Copyright, 2006, Zhou & Lesko, Virginia Tech

Comparison of Fiber Properties

Fiber	Density ρ (g/cc)	Young's Modulus E (GPa)	Strength σ (GPa)	**Strain to Failure (%)**	**Specific Strength σ/ρ**	**Specific Modulus E/ρ**	Diameter (μm)	Upper Use Temp. (°C)
E-glass	**2.6**	**69-72**	**1.7-3.5**	**3.0**	**1.18**	**27.6**	**5-25**	350
S-glass	**2.49**	**85**	**4.8**	**5.3**	**1.9**	**34.3**	**5-15**	300
Carbon (HM)	**1.96**	**517**	**1.86**	**0.38**	**0.95**	**264**	**7-8**	600
Carbon (HS)	**1.8**	**295**	**5.6**	**1.8**	**3 -11**	**164**	**7-8**	500
Kevlar 49 (Aramid)	**1.45**	**135**	**3.0**	**8.1**	**2.1**	**93**	**12**	250
Steel	**7.9**	**200**	**0.45**	**20**	**0.05**	**25**		
Aluminum	**2.7**	**70**	**0.26**	**17**	**0.1**	**26**		

"Fiber Reinforcement," A. R. Bunsell, in Int. Encyclopedia of Composites, SM Lee, Ed., Vol. 2, VCH publishers, N.Y., 1990, 149.

© Copyright, 2006, Zhou & Lesko, Virginia Tech

Fiber Reinforcement Forms

Woven Fabric

Grid Fabric

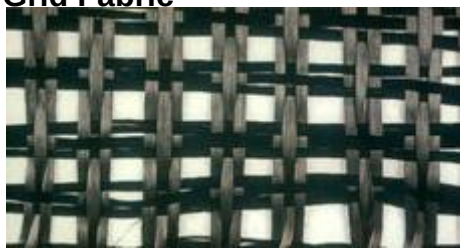

Hybrid Fabric (Carbon/Aramid)

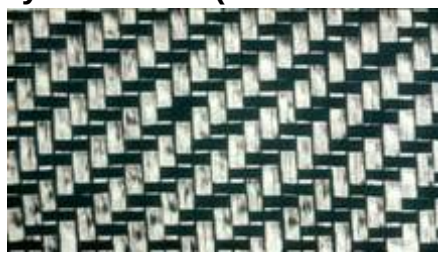

Continuous Mat

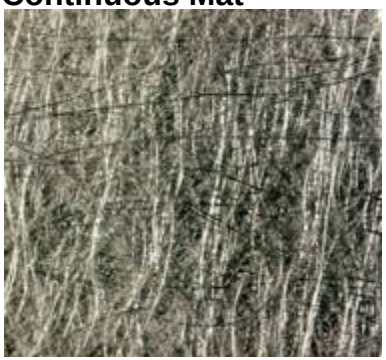

Fiberglass Roving

3D Woven Preforms

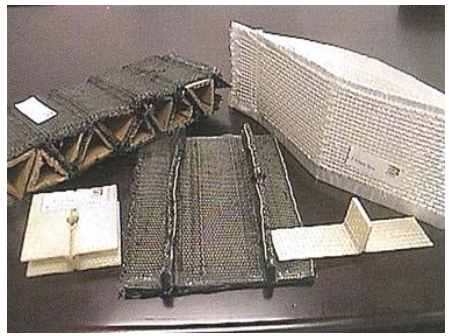

3D Fabric

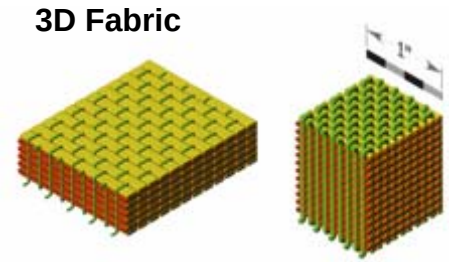

Multi-axial Non-woven Fabric

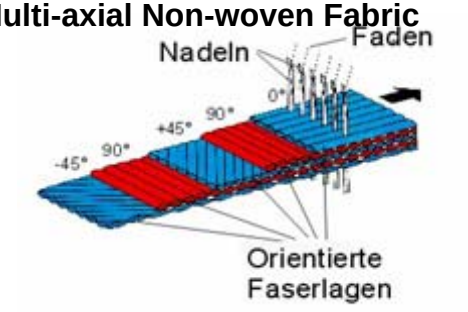

Prepregs

© Copyright, 2006, Zhou & Lesko, Virginia Tech

Outline

- **Constitutive materials**
- **Manufacturing of FRP composites**
  - VARTM
  - Pultrusion
  - Filament Winding
- **Material behavior of FRP composites**
- **Design of FRP structural composites**

© Copyright, 2006, Zhou & Lesko, Virginia Tech

Vacuum Assisted Resin Transfer Moulding (VARTM)

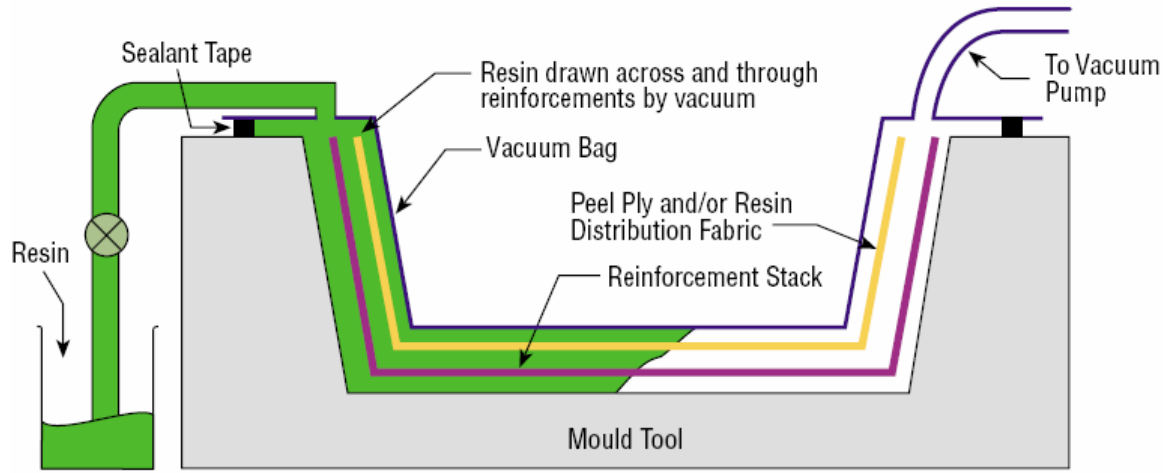

Courtesy of David Cripps, SP Systems

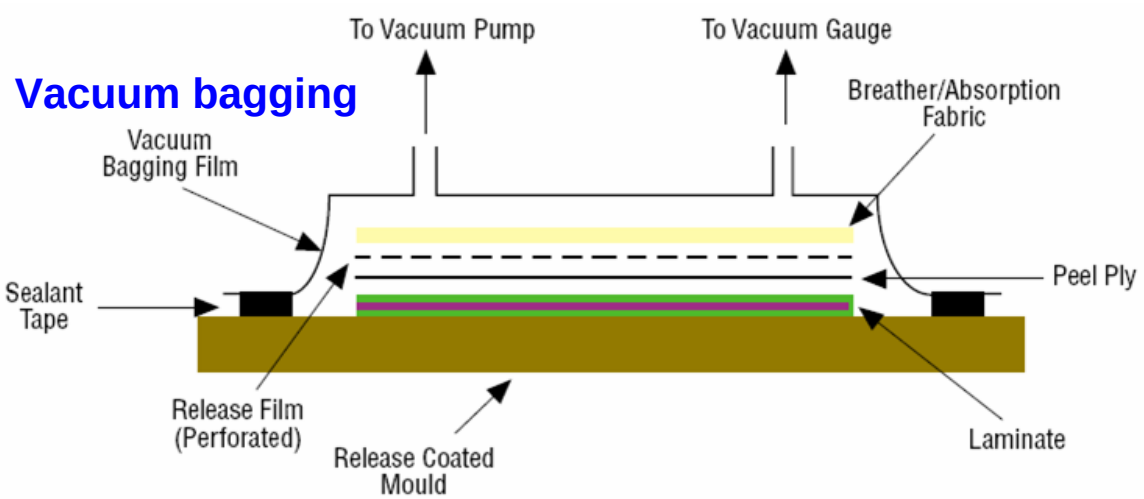

Main Advantages:
Higher fiber content and lower void contents, better fiber wet-out, better health and safety.

Main Disadvantages:
Adds cost in labor, higher level of skill is required.

Typical Applications:
Boats, and car components, sandwiched components.

© Copyright, 2006, Zhou & Lesko, Virginia Tech

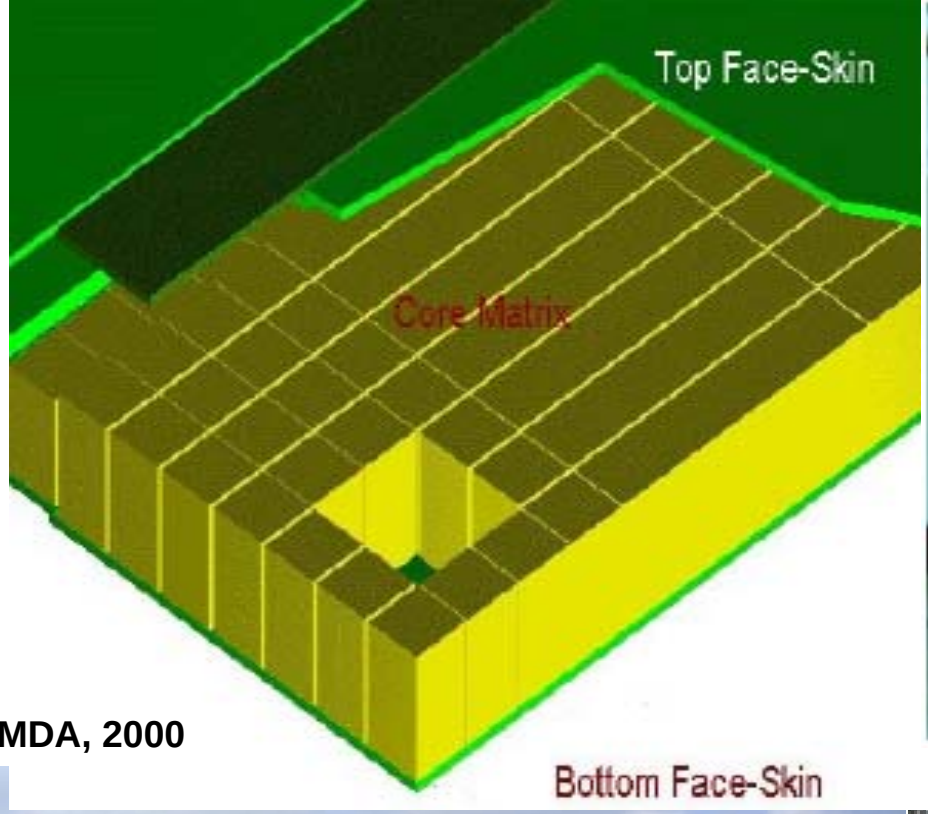
Top Face-Skin
Core Matrix
Bottom Face-Skin

MDA, 2000

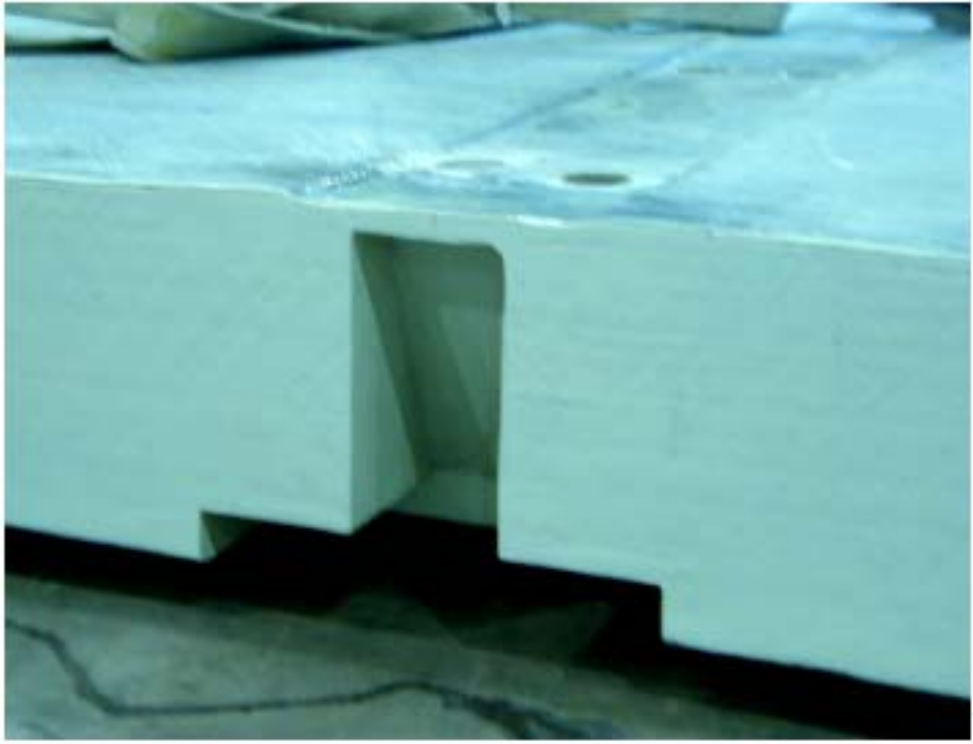

OVERSIZE LOAD

JID
COMPOSITES

Pultrusion

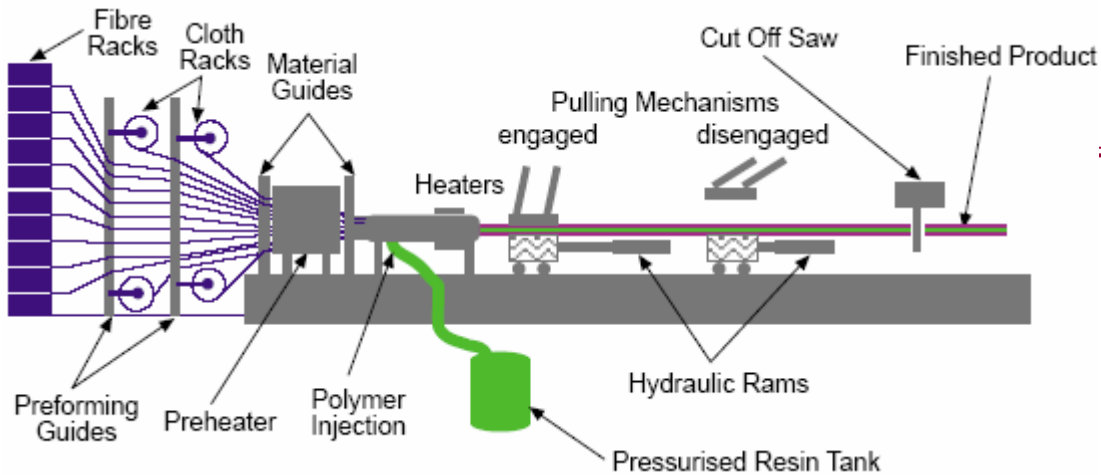

Courtesy of David Cripps, SP Systems

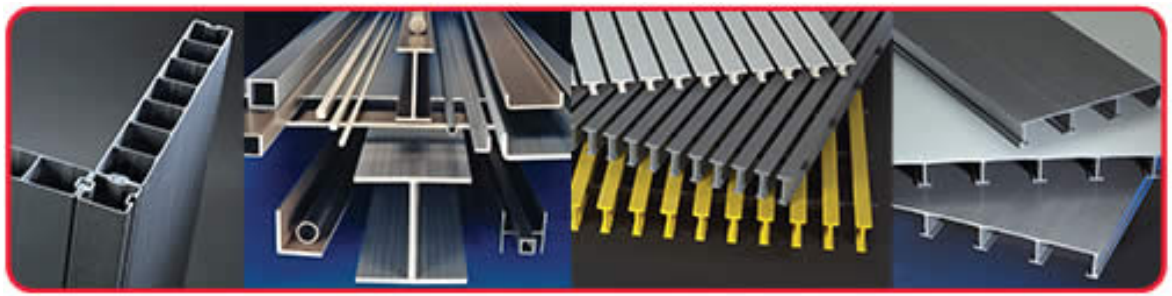

Courtesy of Strongwell

Main Advantages:
Fast and economic, structural properties can be very good.

Main Disadvantages:
Limited to constant or near constant cross-section components, die costs can be high.

Typical Applications:
Beams and girders used in building structures, bridges, frameworks.

© Copyright, 2006, Zhou & Lesko, Virginia Tech

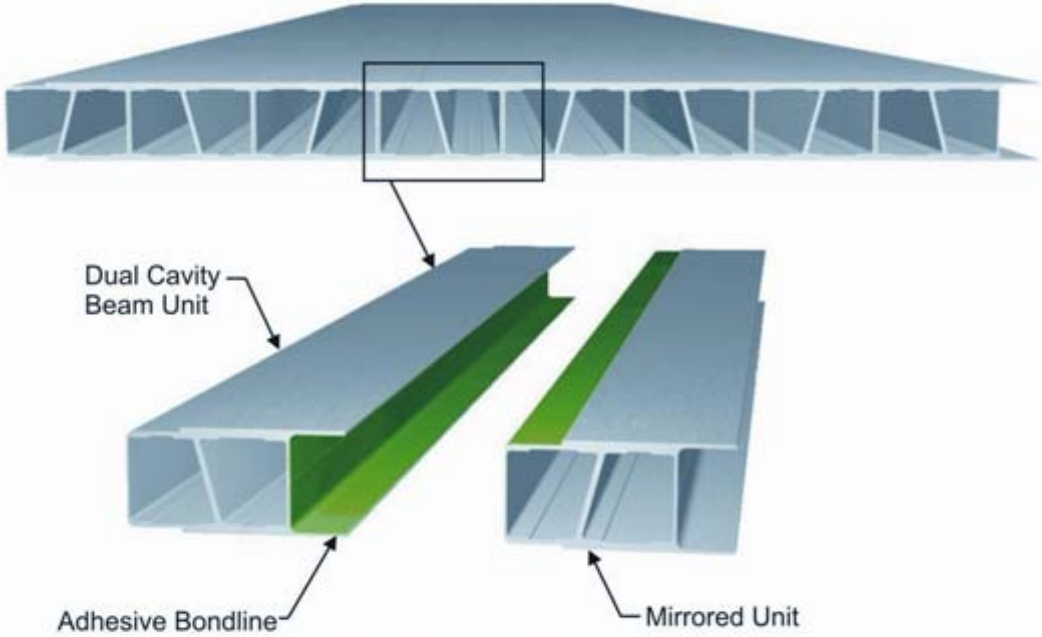

Schematic of *DuraSpan*™ Deck Panel

Strongwell Bridge Deck

Pontresina Bridge, CH, 1997

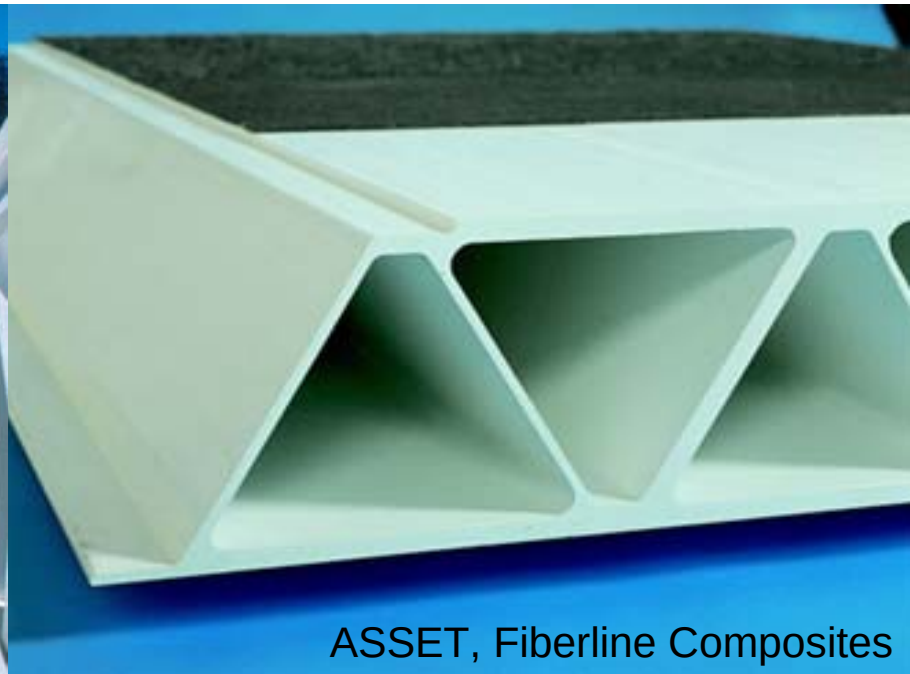

ASSET, Fiberline Composites

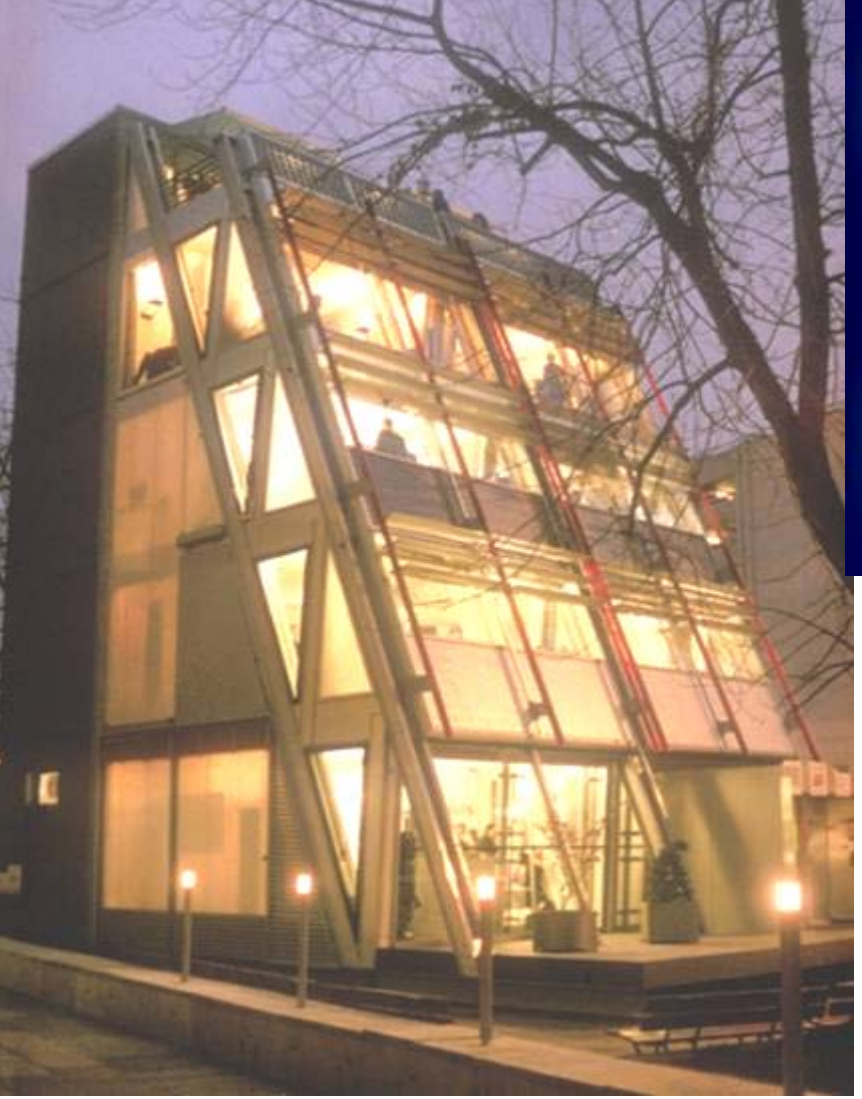

Courtesy of Fiberline Composites

© Copyright, 2006, Zhou & Lesko,

Filament Winding

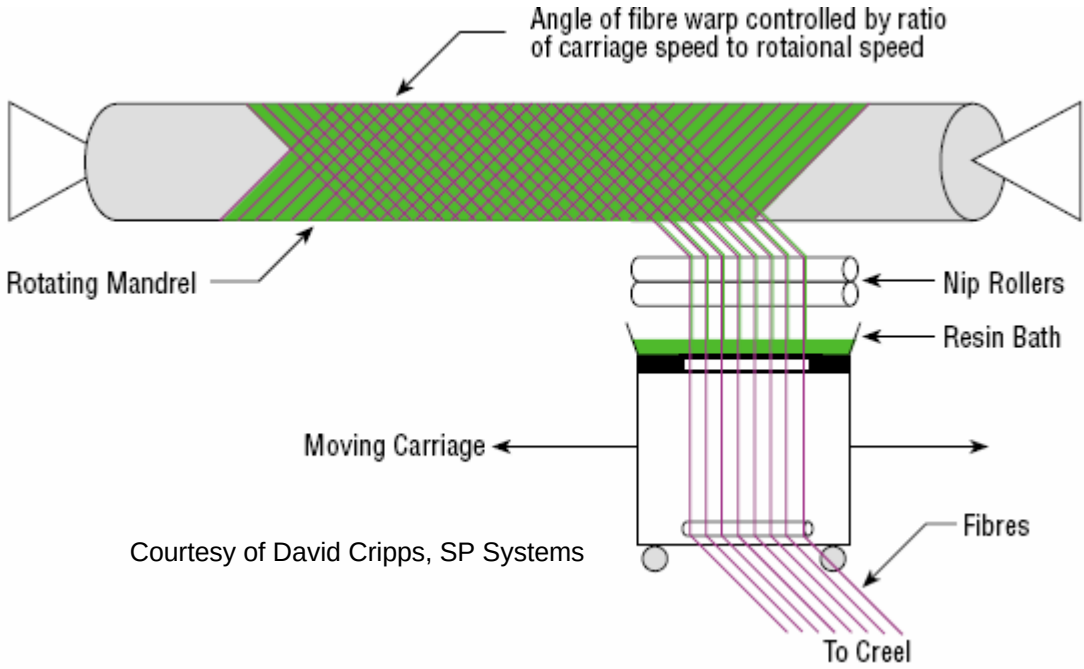

Courtesy of David Cripps, SP Systems

Primarily used for hollow, generally circular or oval sectioned components.

Main Advantages: fast, resin content can be controlled, fiber cost is minimized, structural properties can be very good.

Main Disadvantages: limited to convex shaped components, fiber cannot easily be laid exactly along the length of a component, mandrel costs for large components can be high.

Typical Applications:
Rocket body, storage tanks, pipelines, gas cylinders, truck and bus bodies.

© Copyright, 2006, Zhou & Lesko, Virginia Tech

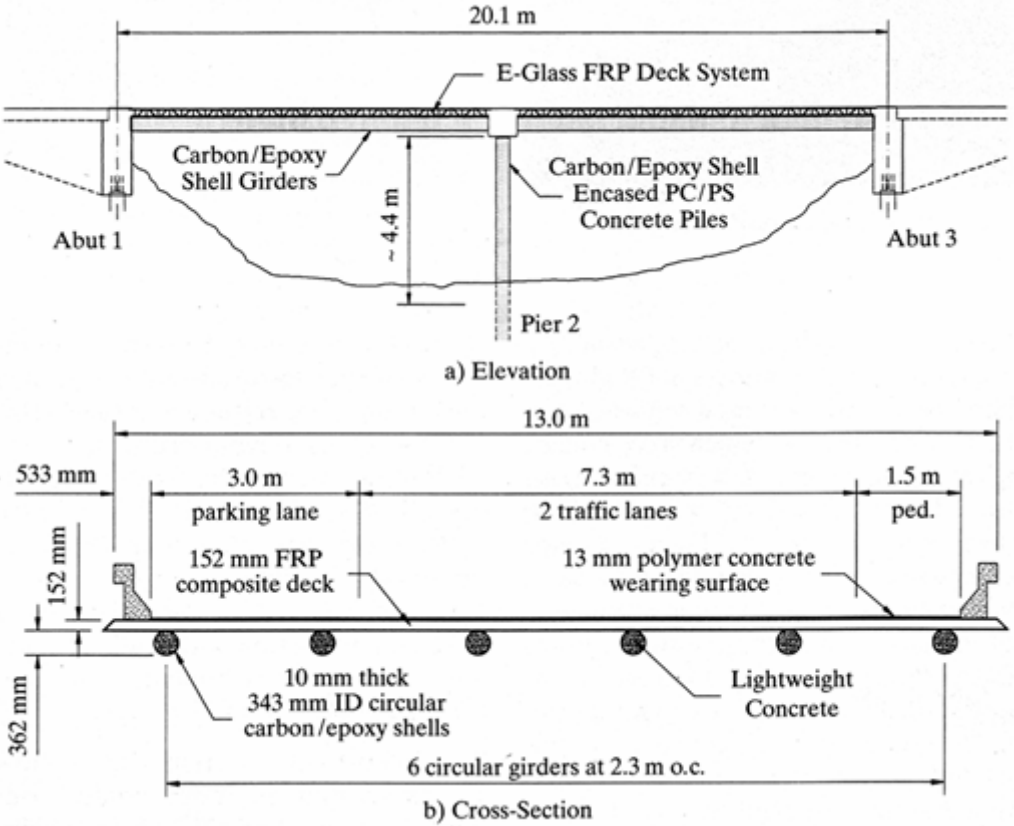

Kings Stormwater Channel Bridge, 2000

(Dept. of Structural Engineering, UC-San Diego)

© Copyright, 2006, Zhou & Lesko, Virginia Tech

Processing Cost Comparison

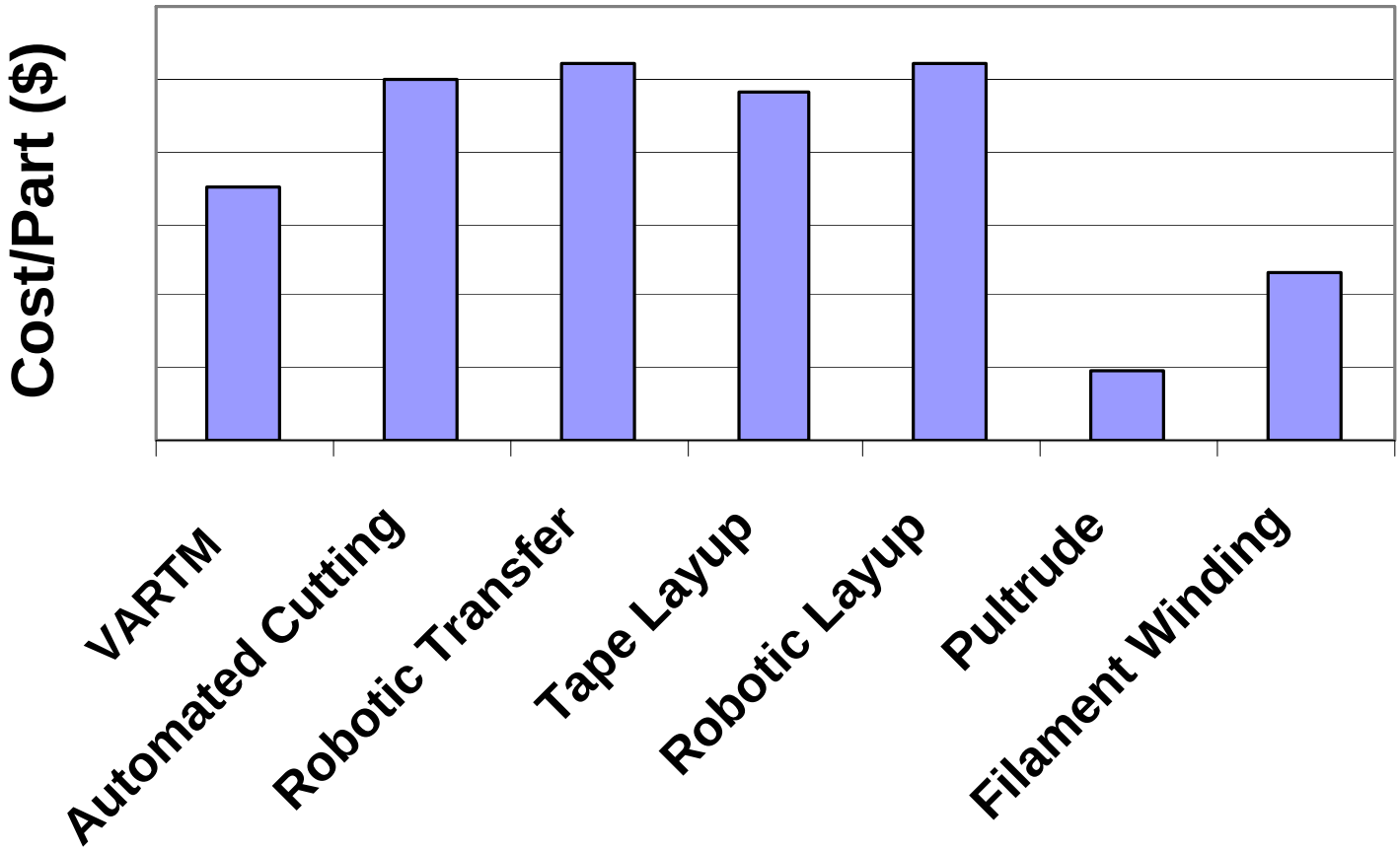

Gutowski, T. G. (1997) “Advanced Composites Manufacturing,” Wiley Interscience

© Copyright, 2006, Zhou & Lesko, Virginia Tech

Outline

- **Constitutive materials**
- **Manufacturing of FRP composites**
- **Material behavior of FRP composites**
- **Design of FRP structural composites**

© Copyright, 2006, Zhou & Lesko, Virginia Tech

Material behavior of FRP composites

Micromechanics

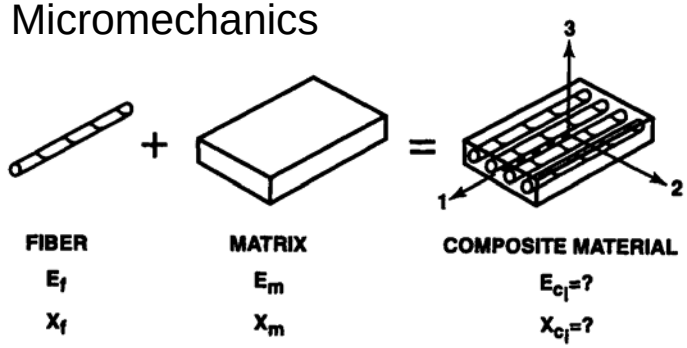

Macromechanics

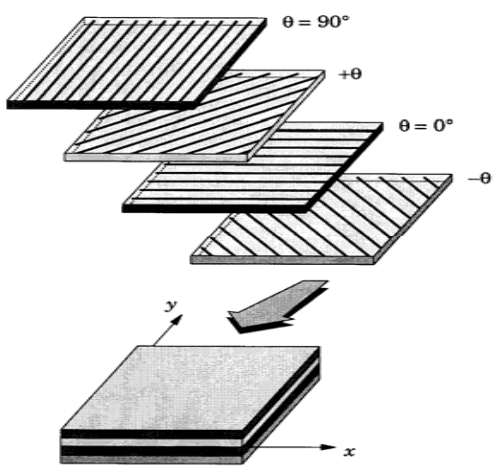

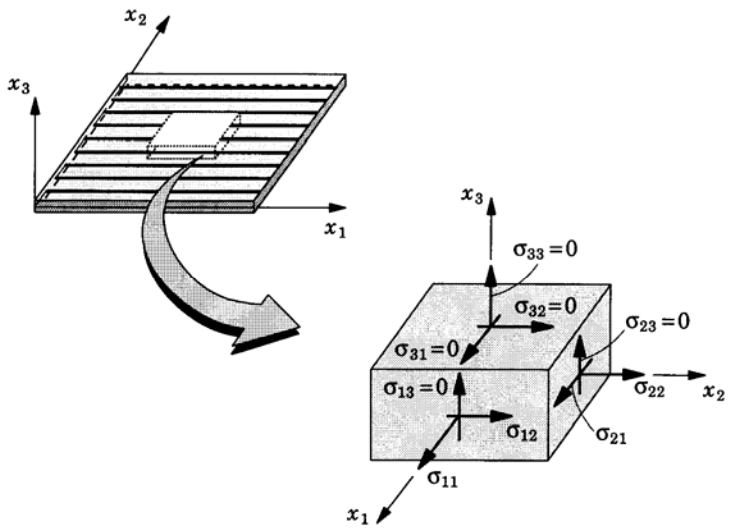

Reddy, 1997

© Copyright, 2006, Zhou & Lesko, Virginia Tech

General Hook's Law for Anisotropic Material

$$\sigma_{ij} = C_{ijkl}\varepsilon_{kl}$$ where $$[\sigma] = \begin{bmatrix} \sigma_{11} & \sigma_{12} & \sigma_{13} \\ \sigma_{21} & \sigma_{22} & \sigma_{23} \\ \sigma_{31} & \sigma_{32} & \sigma_{33} \end{bmatrix}$$ and $$[\varepsilon] = \begin{bmatrix} \varepsilon_{11} & \varepsilon_{12} & \varepsilon_{13} \\ \varepsilon_{21} & \varepsilon_{22} & \varepsilon_{23} \\ \varepsilon_{31} & \varepsilon_{32} & \varepsilon_{33} \end{bmatrix}$$

$C_{ijkl} = C_{jikl}$ and $C_{ijkl} = C_{jilk}$

There are 36 independent coefficients $\sigma_i = C_{ij}\varepsilon_j \quad i, j = 1,2,...,6 \qquad C_{ij} = C_{ji}$

$$[C] = \begin{bmatrix} C_{11} & C_{12} & C_{13} & C_{14} & C_{15} & C_{16} \\ & C_{22} & C_{23} & C_{24} & C_{25} & C_{26} \\ & & C_{33} & C_{34} & C_{35} & C_{36} \\ & & & C_{44} & C_{45} & C_{46} \\ & \text{Symmetry} & & & C_{55} & C_{56} \\ & & & & & C_{66} \end{bmatrix} = \begin{bmatrix} C_{11} & C_{12} & C_{13} & C_{14} & C_{15} & C_{16} \\ C_{12} & C_{22} & C_{23} & C_{24} & C_{25} & C_{26} \\ C_{13} & C_{23} & C_{33} & C_{34} & C_{35} & C_{36} \\ C_{14} & C_{24} & C_{34} & C_{44} & C_{45} & C_{46} \\ C_{15} & C_{25} & C_{35} & C_{45} & C_{55} & C_{56} \\ C_{16} & C_{26} & C_{36} & C_{46} & C_{56} & C_{66} \end{bmatrix}$$

The number of independent constants for a general anisotropic material is 21.

© Copyright, 2006, Zhou & Lesko, Virginia Tech

Coefficients for Some Special Composites

Monoclinic (X_3, 13)

One plane of material symmetry

$$[C]=\begin{bmatrix} C_{11} & C_{12} & C_{13} & 0 & 0 & C_{16} \\ C_{12} & C_{22} & C_{23} & 0 & 0 & C_{26} \\ C_{13} & C_{23} & C_{33} & 0 & 0 & C_{36} \\ 0 & 0 & 0 & C_{44} & C_{45} & 0 \\ 0 & 0 & 0 & C_{45} & C_{55} & 0 \\ C_{16} & C_{26} & C_{36} & 0 & 0 & C_{66} \end{bmatrix}$$

Orthotropic (X_2, X_3, 9)

Two orthogonal planes of material symmetry

$$[C]=\begin{bmatrix} C_{11} & C_{12} & C_{13} & 0 & 0 & 0 \\ C_{12} & C_{22} & C_{23} & 0 & 0 & 0 \\ C_{13} & C_{23} & C_{33} & 0 & 0 & 0 \\ 0 & 0 & 0 & C_{44} & 0 & 0 \\ 0 & 0 & 0 & 0 & C_{55} & 0 \\ 0 & 0 & 0 & 0 & 0 & C_{66} \end{bmatrix}$$

Transversely Isotropic ($P_{1\text{-}2}$, 5)

invariant with respect to an axis

$$[C]=\begin{bmatrix} C_{11} & C_{12} & C_{13} & 0 & 0 & 0 \\ C_{12} & C_{11} & C_{23} & 0 & 0 & 0 \\ C_{13} & C_{23} & C_{33} & 0 & 0 & 0 \\ 0 & 0 & 0 & C_{44} & 0 & 0 \\ 0 & 0 & 0 & 0 & C_{44} & 0 \\ 0 & 0 & 0 & 0 & 0 & C_{66} \end{bmatrix}$$

$$C_{66}=\frac{1}{2}(C_{11}-C_{12})$$

Isotropic (2)

invariant with respect to all axes

$$[C]=\begin{bmatrix} C_{11} & C_{12} & C_{12} & 0 & 0 & 0 \\ C_{12} & C_{11} & C_{12} & 0 & 0 & 0 \\ C_{12} & C_{12} & C_{11} & 0 & 0 & 0 \\ 0 & 0 & 0 & C_{44} & 0 & 0 \\ 0 & 0 & 0 & 0 & C_{44} & 0 \\ 0 & 0 & 0 & 0 & 0 & C_{44} \end{bmatrix}$$

$$C_{44}=\frac{1}{2}(C_{11}-C_{12})$$

© Copyright, 2006, Zhou & Lesko, Virginia Tech

Physical Significance of Coefficients

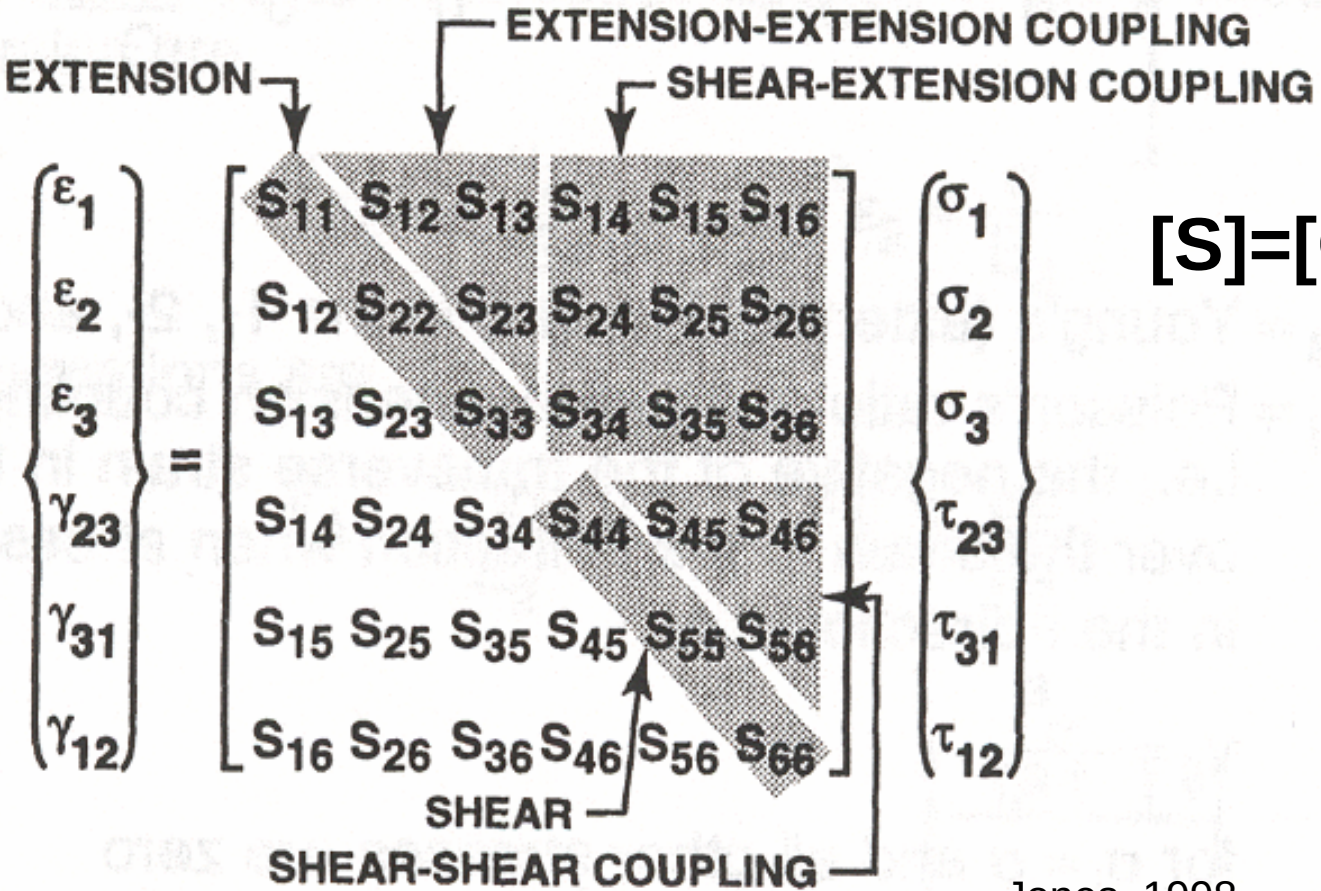

$$\begin{Bmatrix} \varepsilon_1 \\ \varepsilon_2 \\ \varepsilon_3 \\ \gamma_{23} \\ \gamma_{31} \\ \gamma_{12} \end{Bmatrix} = \begin{bmatrix} S_{11} & S_{12} & S_{13} & S_{14} & S_{15} & S_{16} \\ S_{12} & S_{22} & S_{23} & S_{24} & S_{25} & S_{26} \\ S_{13} & S_{23} & S_{33} & S_{34} & S_{35} & S_{36} \\ S_{14} & S_{24} & S_{34} & S_{44} & S_{45} & S_{46} \\ S_{15} & S_{25} & S_{35} & S_{45} & S_{55} & S_{56} \\ S_{16} & S_{26} & S_{36} & S_{46} & S_{56} & S_{66} \end{bmatrix} \begin{Bmatrix} \sigma_1 \\ \sigma_2 \\ \sigma_3 \\ \tau_{23} \\ \tau_{31} \\ \tau_{12} \end{Bmatrix}$$

$$[S]=[C]^{-1}$$

Jones, 1998

© Copyright, 2006, Zhou & Lesko, Virginia Tech

Effect of Elastic Constants

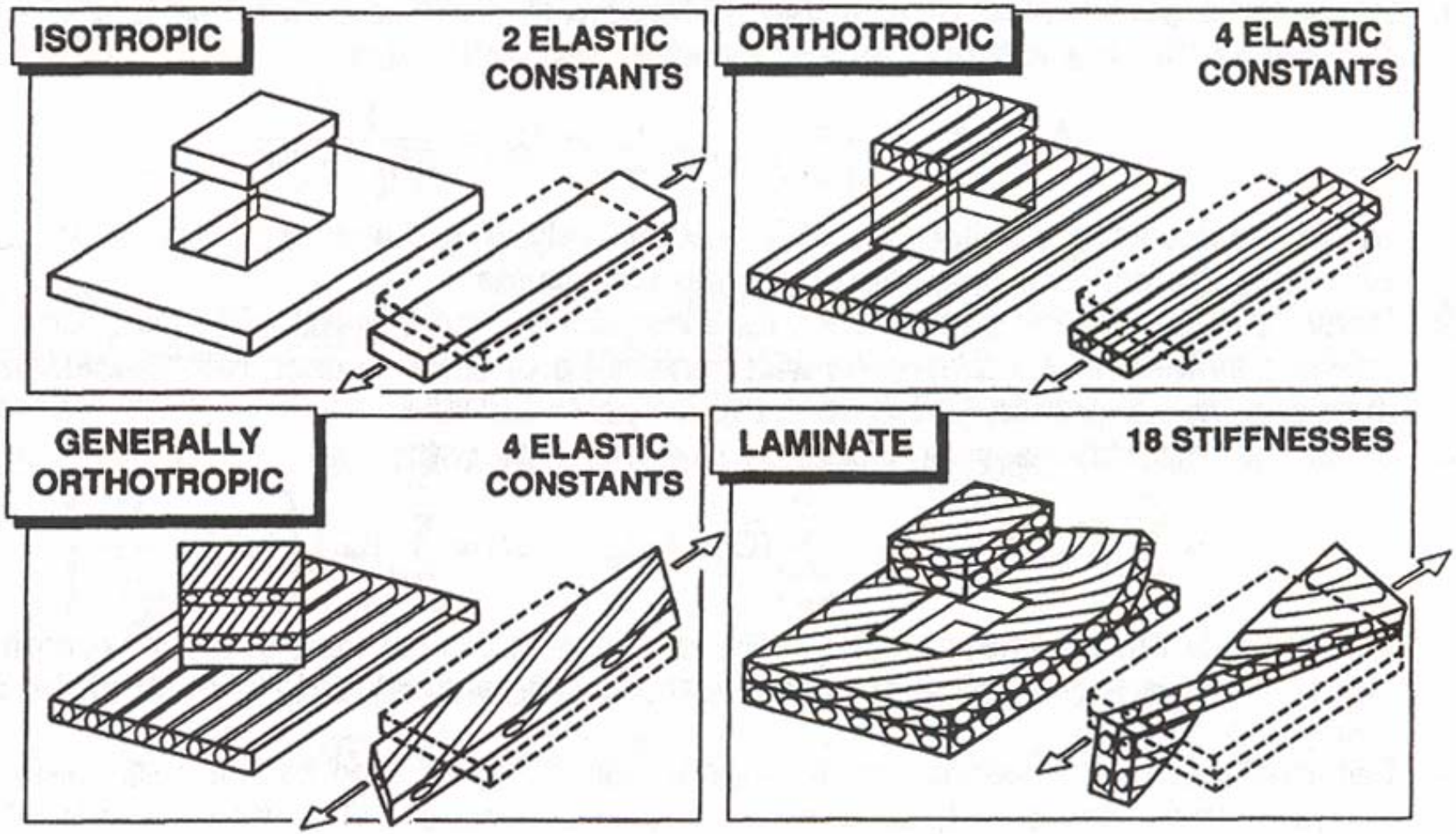

Jones, 1998

© Copyright, 2006, Zhou & Lesko, Virginia Tech

Strength of FRP Composites

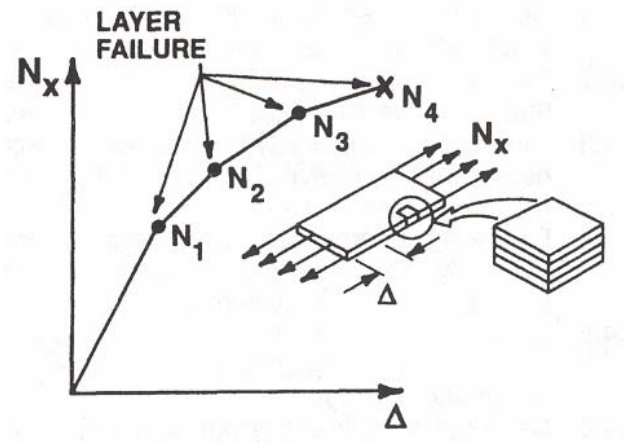

Laminate strength is based on the strengths and interactions of its laminae.

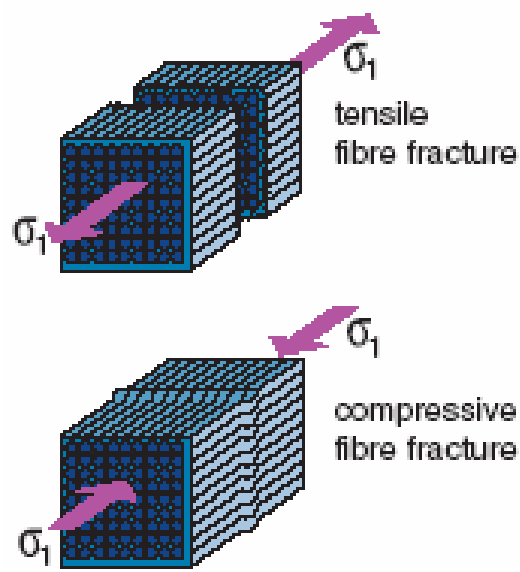

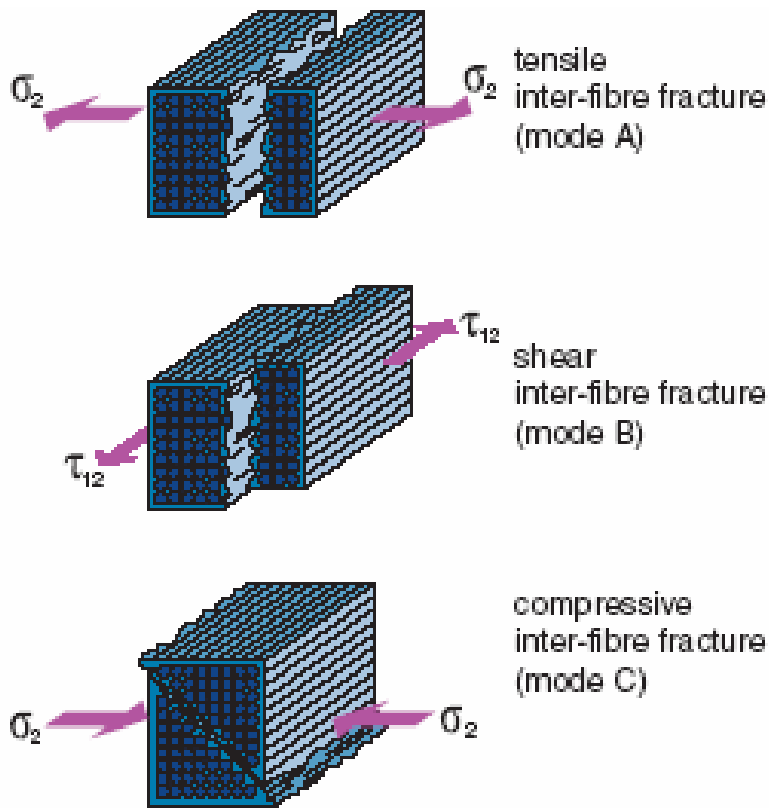

© Copyright, 2006, Zhou & Lesko, Virginia Tech

Strength and Failure Criteria

Strength shall be defined in different directions

X_t = Axial or longitudinal strength in tension

X_c = Axial or longitudinal strength in compression

Y_t = Transverse strength in tension

Y_c = Transverse strength in compression

S = Shear strength (in-plane and through-thickness)

Strength Criteria for Orthotropic Laminates (in ply level)

- **Maximum stress failure criterion**
- **Maximum strain failure criterion**
- **Tsai-Hill failure criterion**
- **Hoffman failure criterion**
- **Tsai-Wu tensor failure criterion**

© Copyright, 2006, Zhou & Lesko, Virginia Tech

Tensile Strength of FRP Laminates

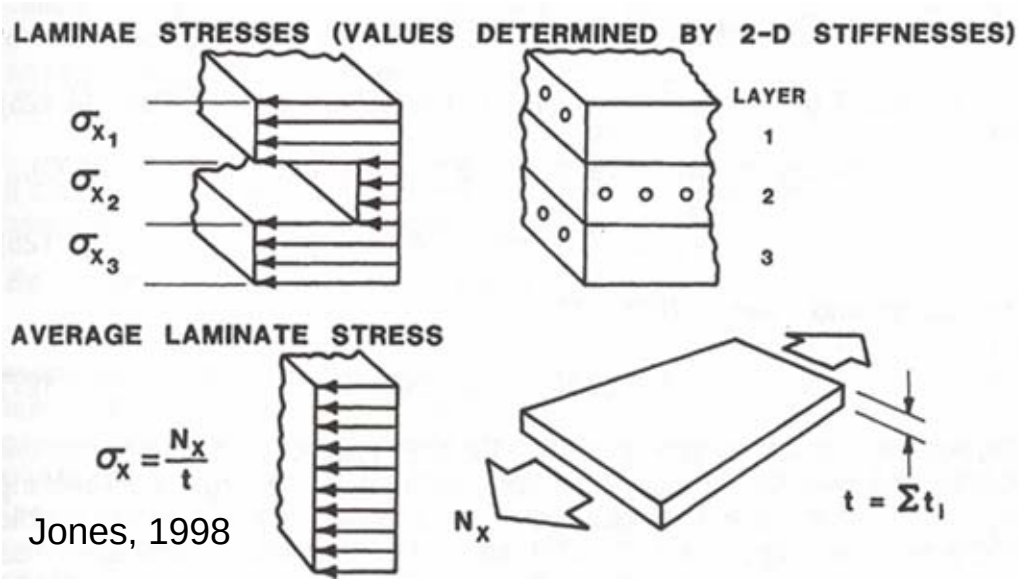

Jones, 1998

Layer by layer evaluation

Evaluated using smeared properties

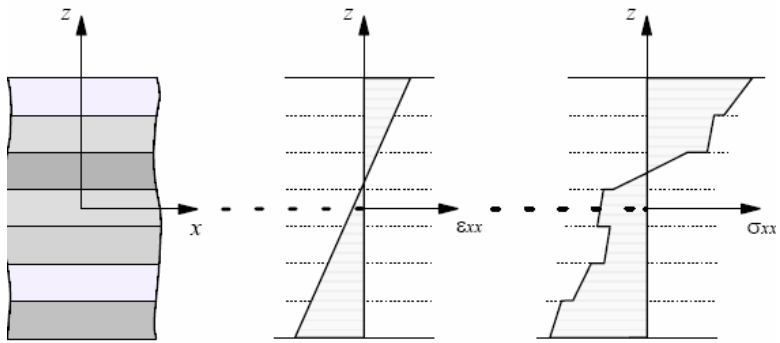

Strain **Stress**

© Copyright, 2006, Zhou & Lesko, Virginia Tech

Compressive Strength of Laminates

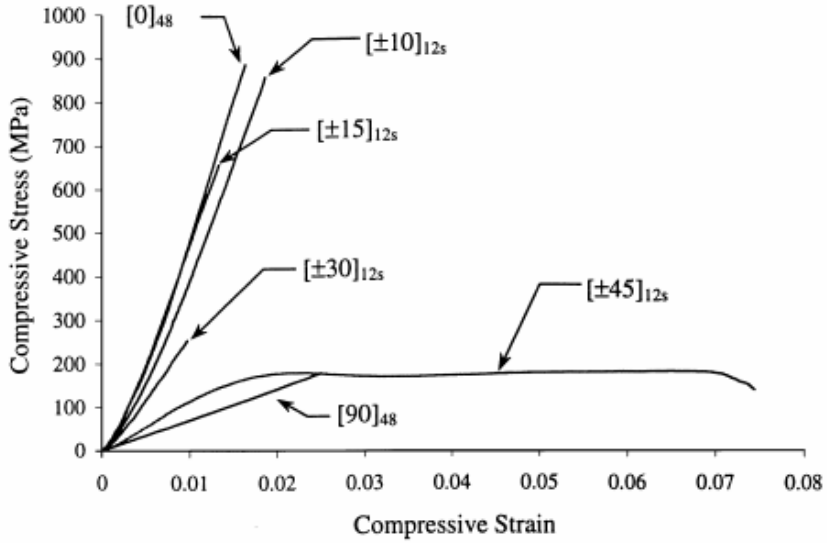

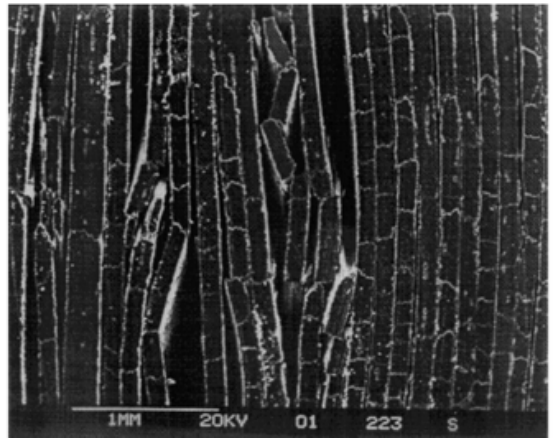

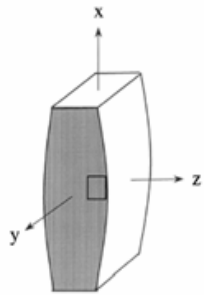

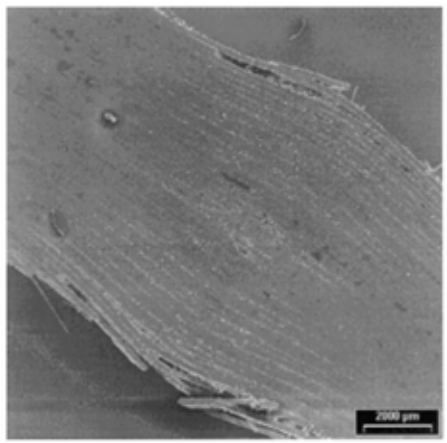

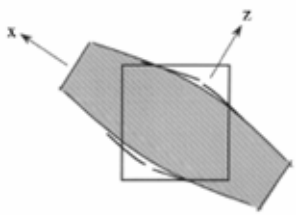

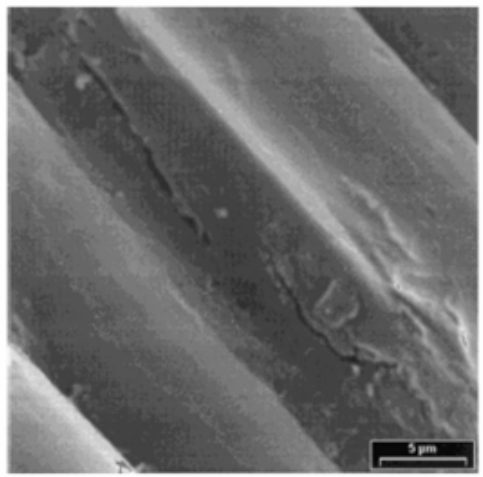

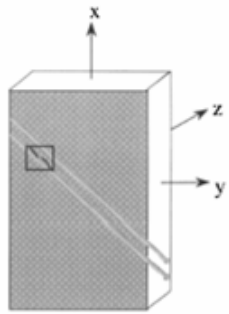

Potter et al. Composites Science and Technology 60 (2000): 2525-2538.

© Copyright, 2006, Zhou & Lesko, Virginia Tech

Interlaminar Stress & Delamination

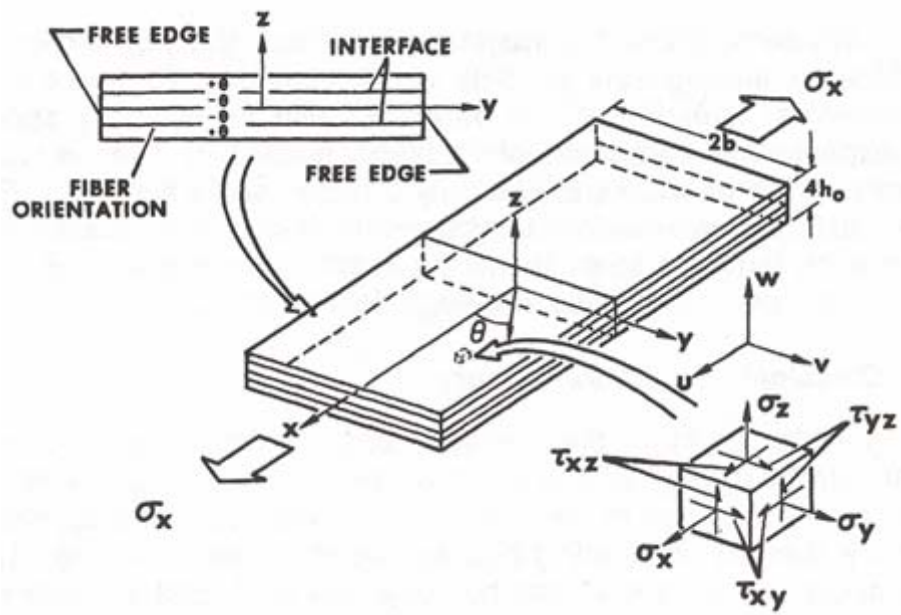

High interlaminar stresses are the cause for one of the failure mechanisms uniquely characteristic of laminates: delamination.

The analysis of interlaminar stresses requires an elasticity approach, and usually requires approximate numerical techniques.

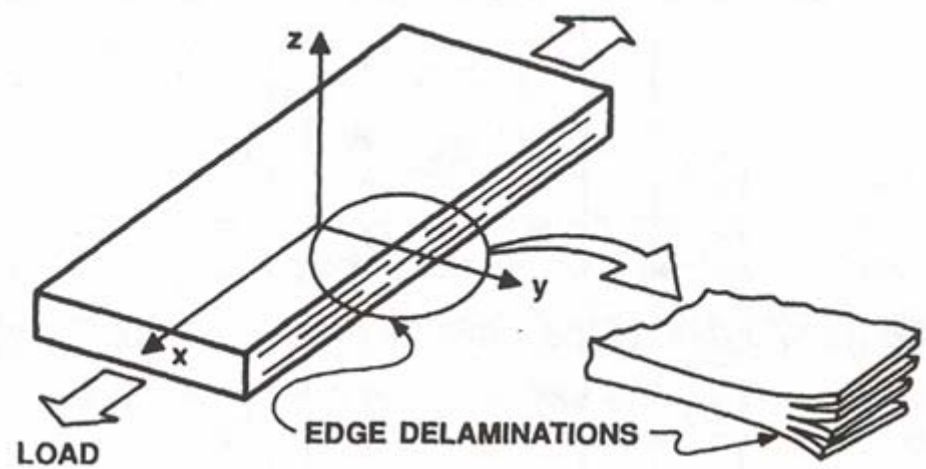

Jones, 1998

© Copyright, 2006, Zhou & Lesko, Virginia Tech

Interlaminar Stress & Delamination

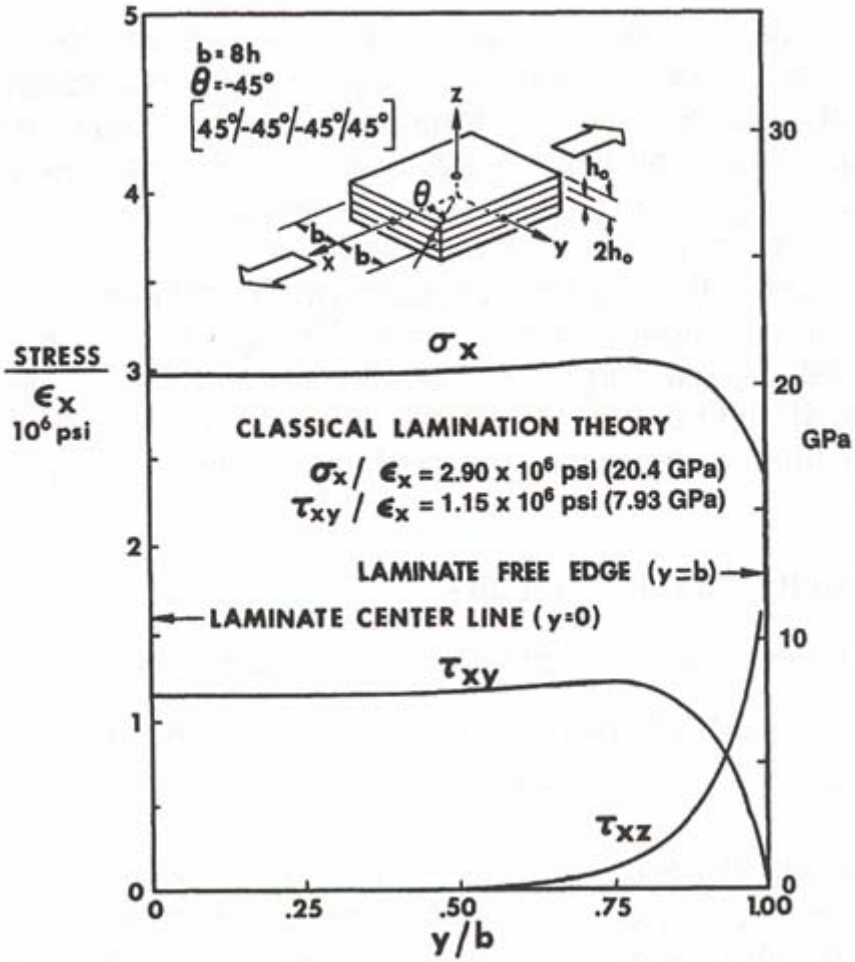

Jones, 1998

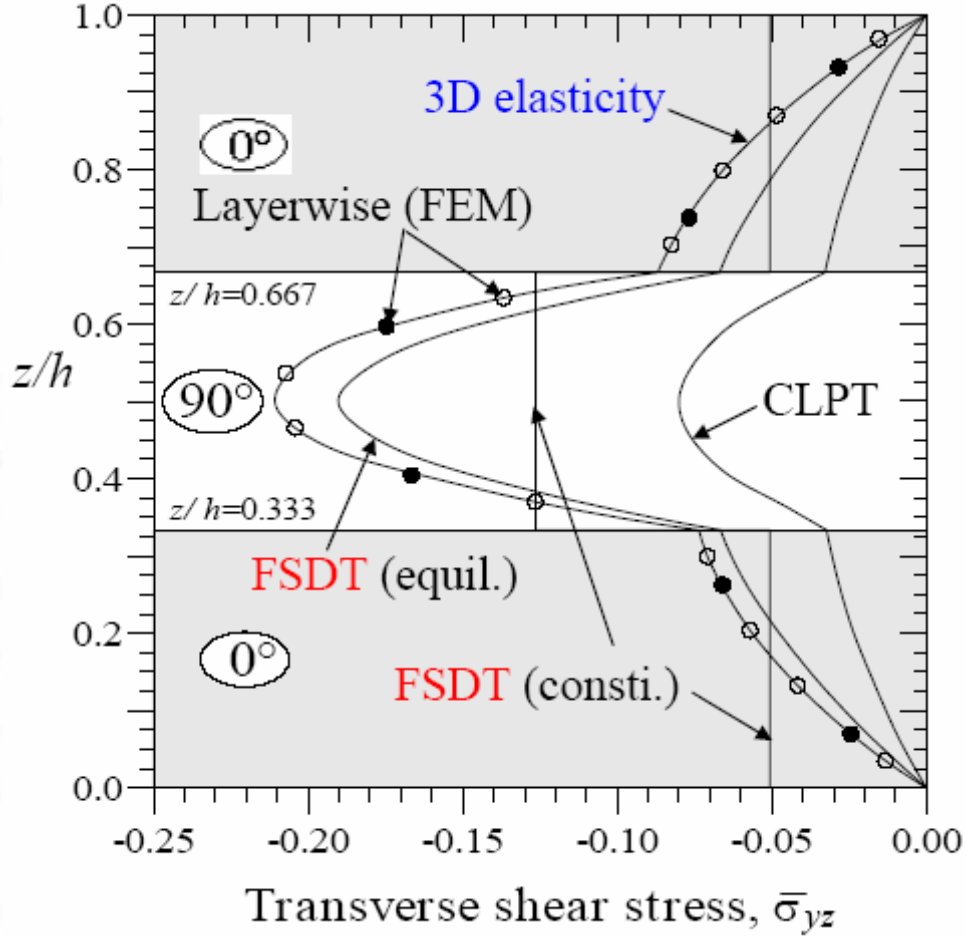

Reddy, 2003

© Copyright, 2006, Zhou & Lesko, Virginia Tech

Outline

- **Constitutive materials**
- **Manufacturing of FRP composites**
- **Material behavior of FRP composites**
- **Design of FRP structural composites**

© Copyright, 2006, Zhou & Lesko, Virginia Tech

Design of FRP Structural Composites

- **Design Methods for FRP Structural Members**
  - Allowable stress design (ASD)
    - Safety factor for strength and stability

$$\sigma_{\text{reqd}} \leq \frac{\sigma_{\text{ult}}}{\text{SF}}$$

  - Limit state design (LSD)
    - Ultimate limit state (ULS) and serviceability limit state (SLS)
    - (Load action x factors) < (structure resistance x factors)
  - Load and resistance factor design (LRFD)
    - Knockdown factors: $\phi \times R_n > \Sigma(\gamma_i \times Q_i)$
    - Load factors (γ_i) from design manuals or codes, resistance (R_n) and resistance factor ϕ require prudent examination
  - Performance based design (PBD)
    - Meet certain performance (local and global) requirements
    - Full-scale testing usually required

Reference: Bank, L.C. "Fiber-reinforced polymer composites." Handbook of structural engineering, W. F. Chen and E. M. Lui, eds., CRC Press, Boca Raton, 2005.

© Copyright, 2006, Zhou & Lesko, Virginia Tech

Questions

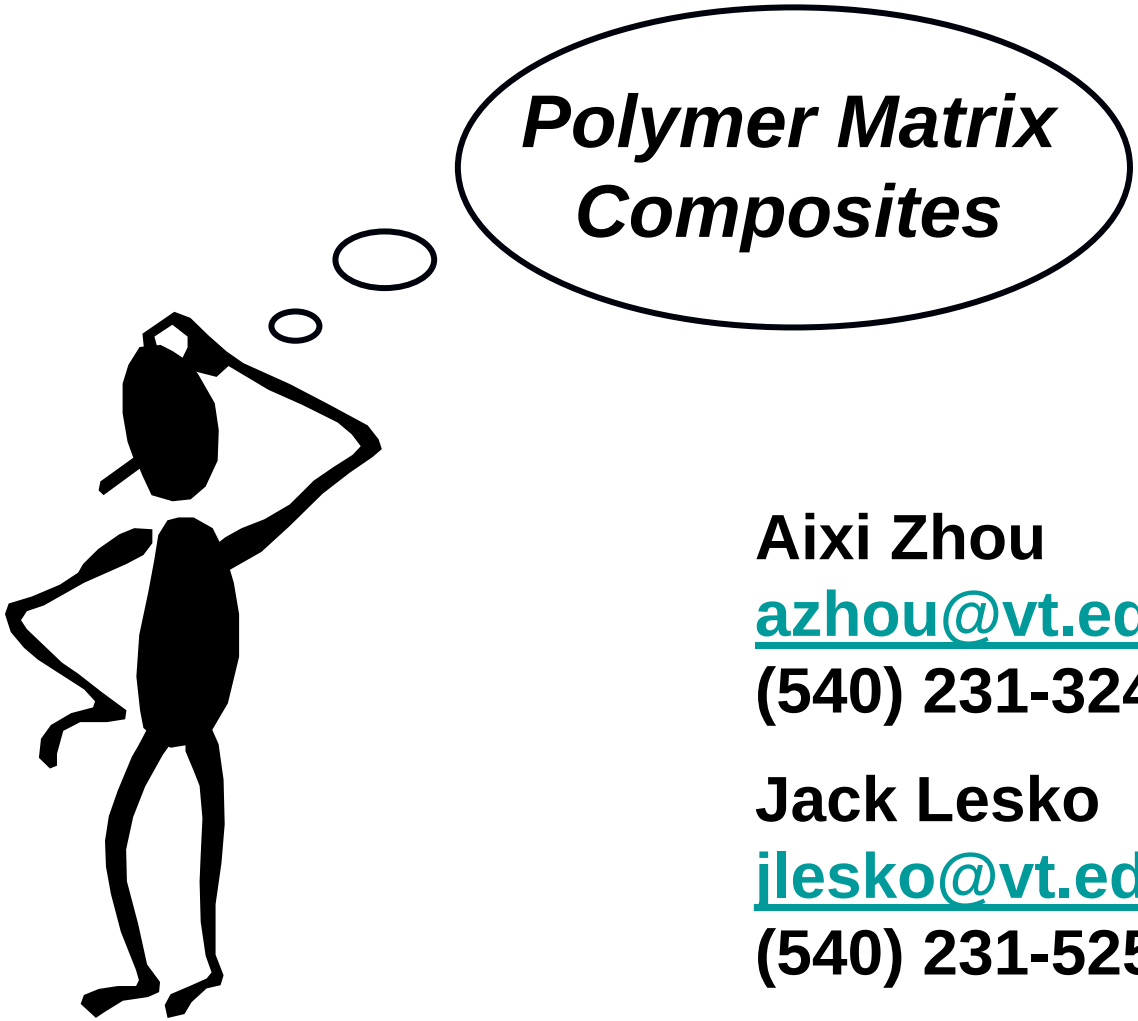

Aixi Zhou
azhou@vt.edu
(540) 231-3249

Jack Lesko
jlesko@vt.edu
(540) 231-5259

© Copyright, 2006, Zhou & Lesko, Virginia Tech