Virginia's Experience with the use of Fiber Reinforced Polymer Composites in Bridges

Jose Gomez

Associate Director of Research

Virginia Transportation Research Council

Acknowledgements

- Three Scientists at VTRC
- Four Faculty at Virginia Tech
- Numerous VDOT employees
- In excess of 14 graduate students at Virginia Tech

STRONGWELL

FHWA

•*Innovative Bridge Research & Construction Program*

VTRC Virginia Transportation Research Council

FRP Composites Projects in Virginia

- Tom’s Creek Bridge – FRP Beams
- Smyth County Bridge – FRP Beams
- Troutville Virginia Weigh Station – FRP Deck Panels
- Gill’s Creek Bridge – FRP Reinforcing Bar
- Covington Through Truss – FRP Deck System
- Tangier Island – FRP Deck System

Tom's Creek Bridge, Blacksburg, VA

- Simple 17.5’ span, with 20’ long by 24 *ft* wide deck
- The deck is 5” deep glue-laminated timbers with 4 *in* thick asphalt overlay
- 24 FRP composite 8” deep Strongwell double-web I-beams used as primary superstructure elements spaced at 1’
- Manufactured from glass and carbon fibers in a vinyl ester matrix using the pultrusion method

Pultrusion

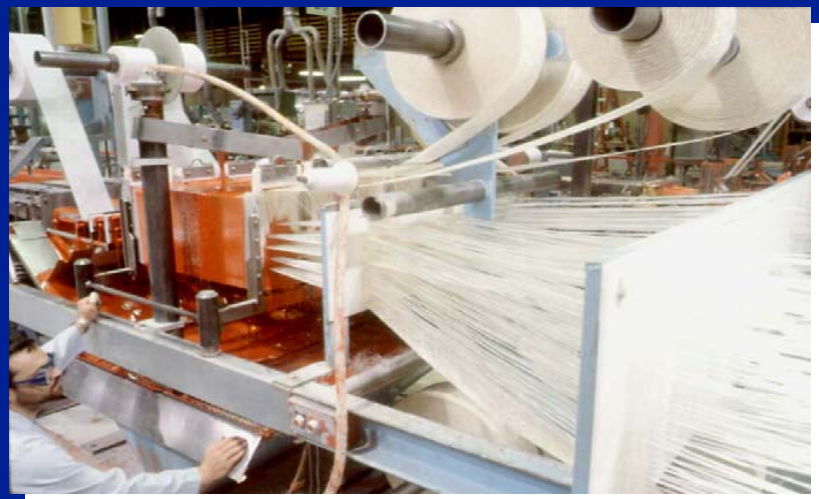

VTRC
Virginia Transportation Research Council

Strongwell 8” Double Web Beam

- Composite beams properties:
  - 11.2 *lb/ft*
  - Moment of Inertia 129 *in*^{4}
  - Modulus of Elasticity in flexure 7000 *ksi*
  - Ultimate moment capacity about 120 *K-ft*
  - Actual maximum service load moment 60 *K-ft*

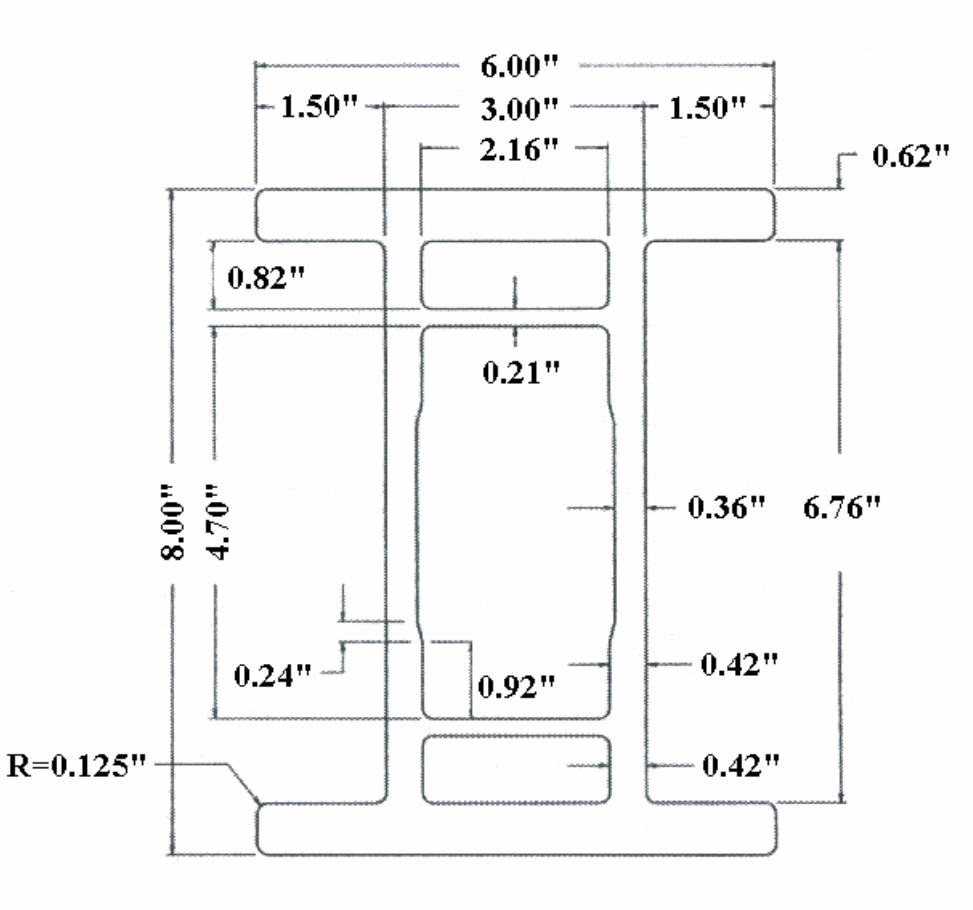

Tom's Creek Bridge
Typical Section and Instrumentation Plan

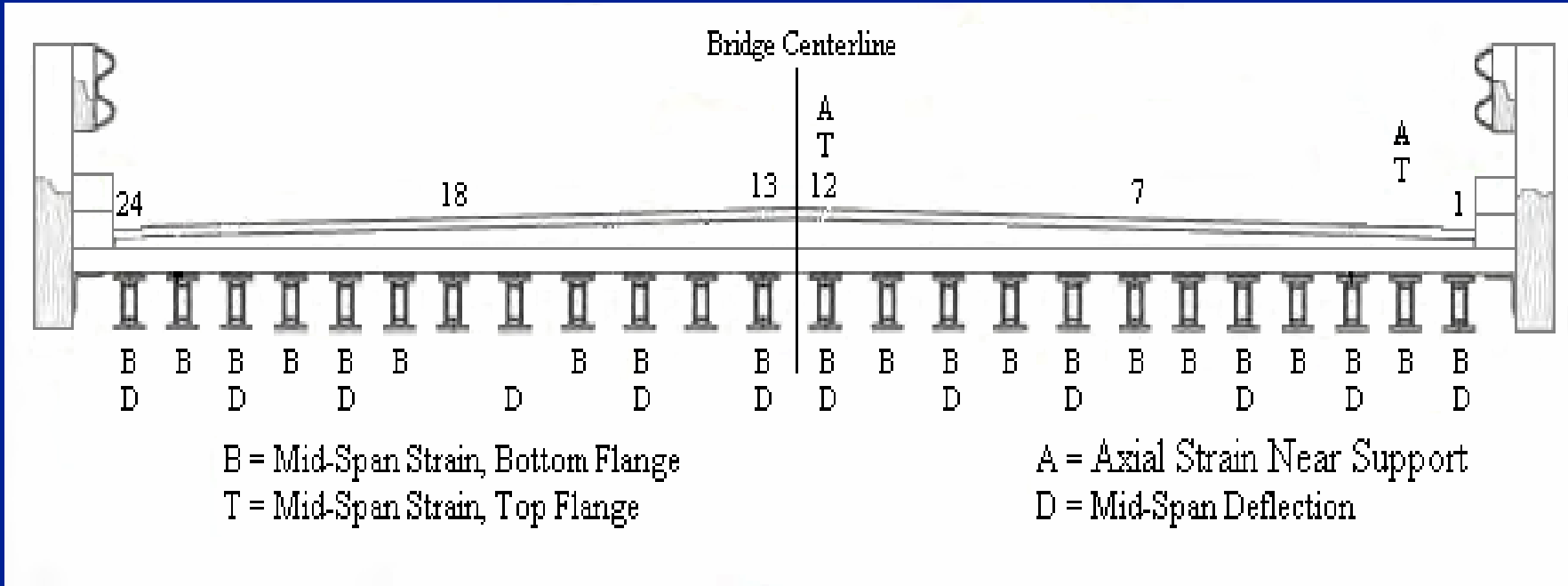

Tom's Creek Bridge, Blacksburg, VA

- Tom’s Creek Bridge was constructed in VT Structures Lab for service load testing and re-constructed at bridge site
- Two additional beams were tested to failure
- Six live load tests conducted to determine:
  - Dynamic load deflections
  - Live load distribution to the beams
  - Degree of composite action
- Two beams removed and tested after 1.5 years of service life

Tom's Creek Bridge, Blacksburg, VA

- The measured live load distribution to the FRP beams similar to steel girders with timber deck
- Attempts to force composite action between deck and beam were unsuccessful
- The service live load deflection dominated the bridge design
- High dynamic load response at 90%
- No service-dependent stiffness or strength degradation over the first 1.5 years of bridge life
- No sign of deterioration or creep of the beams after 8 years of service

Dickey Creek Bridge Typical Section

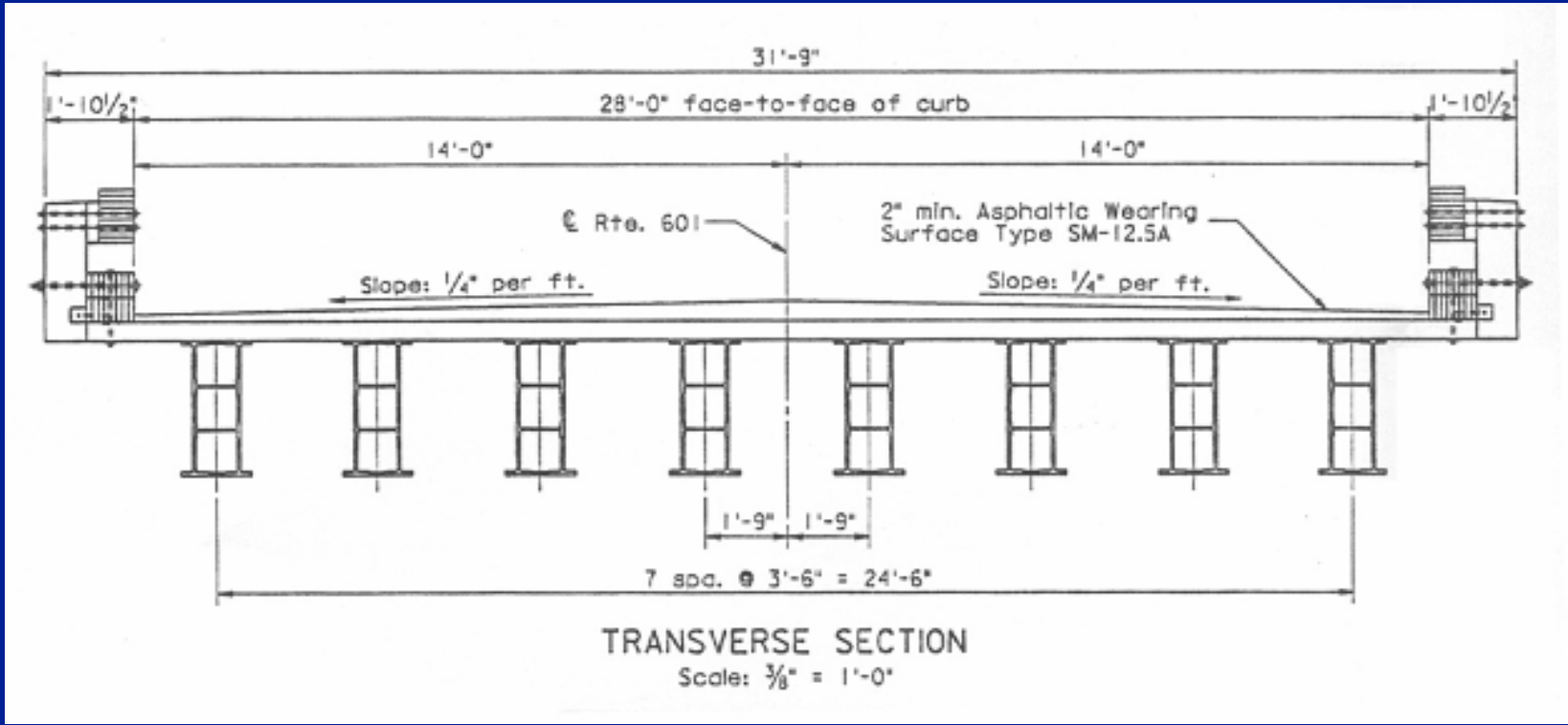

Dickey Creek Bridge, Smyth Co.

VTRC
Virginia Transportation Research Council

Dickey Creek Bridge, Smyth Co.

- Used a full-scale beam specifically designed for use as a main superstructure element for bridges
- Site was selected for its low traffic count combined with heavy live loads
- The rehabilitated bridge is 39 ft long by 28 ft wide
- Deck is 5” deep glue-laminated timber panels with asphalt overlay
- Live load deflection criterion (L/800) dominated the structural design of the beams

Strongwell 36" Double-Web I-Beam

- Properties of the 8 Strongwell 36 *in* double-web I-beams
  - 70 *lb/ft*
  - Moment of Inertia of 15,290 *in4*
  - Modulus of Elasticity in flexure 6,200 *ksi*
  - Shear Modulus (kGA) 20,000 *ksi-in*^{2}
  - Ultimate moment capacity about 1400 *K-ft*
  - Actual maximum service load moment was 198 *K-ft*
- The beams were designed for a maximum service HS20-44 live load deflection of L/800

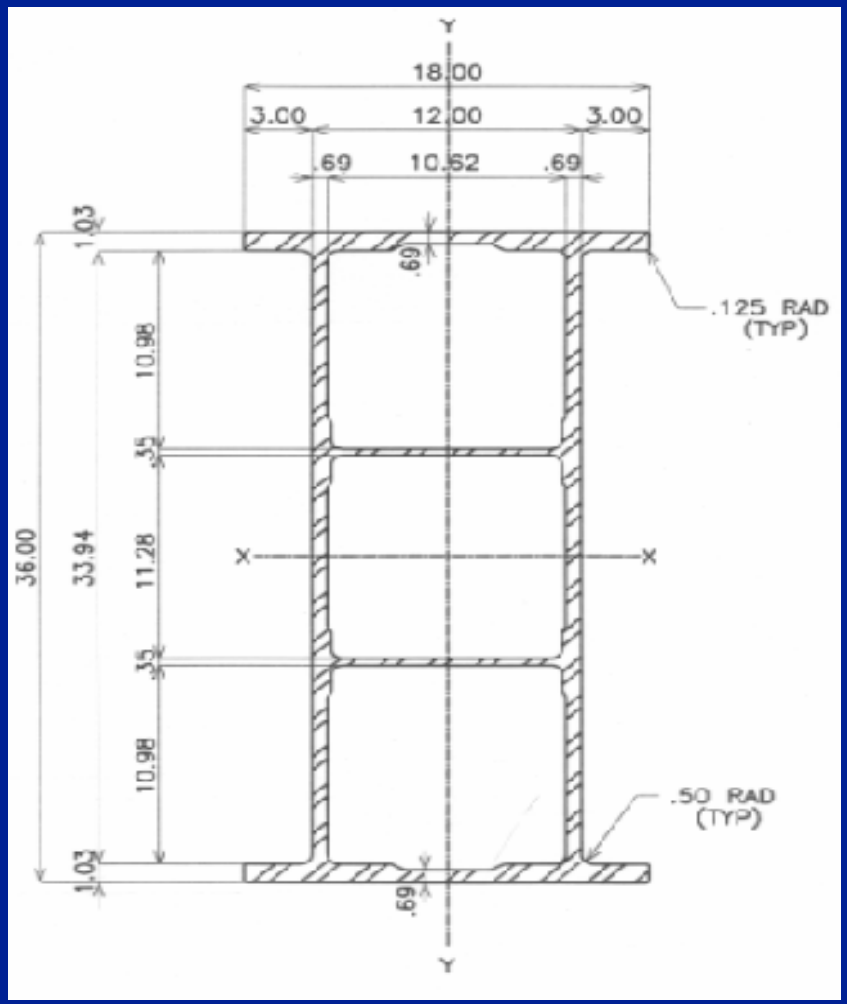

Testing FRP Composite Beam Stiffness

- Each beam for bridge tested to 5 times maximum service load moment without damage

Field Testing, Dickey Creek

- Investigated:
  - Transverse load distribution
  - Dynamic load allowance
  - Service load deflections

Field Testing, Dickey Creek

- The measured live load distribution to the FRP beams similar to steel girders with timber deck
- Service live load deflection controlled the longitudinal design of the bridge
- Measured dynamic load allowance was 36%
- A final field test did not indicate any time or service-dependent stiffness or degradation of the beams

Troutville Weigh Station
Interstate 81, Troutville, VA

VTRC
Virginia Transportation Research Council

Troutville Weigh Station
Interstate 81, Troutville, VA

- Developed a lightweight and durable bridge deck using off-the-shelf FRP components
- Produced from adhesively bonded pultrusions where the core of the deck possesses a square geometry running transversely to traffic
- Tests were designed to evaluate service load stiffness and ultimate load failure modes
- Evaluated the durability of the bridge deck system in the off-ramp for the Interstate 81 weigh station
- Test Deck panel is 15’-3” wide, 5’-0” long, placed on W10x40 steel beams spaced at 6’-6”

Strongwell FRP bridge deck system

- Deck system made of 6”×6”×3/8” pultruded box beams, two skin plates (¼” and ½” thick)
- System weighs less than 25 psf, including a polymer concrete wearing surface and transverse steel rods
- The box beams & plate are bonded together using adhesive and vacuum-bagging

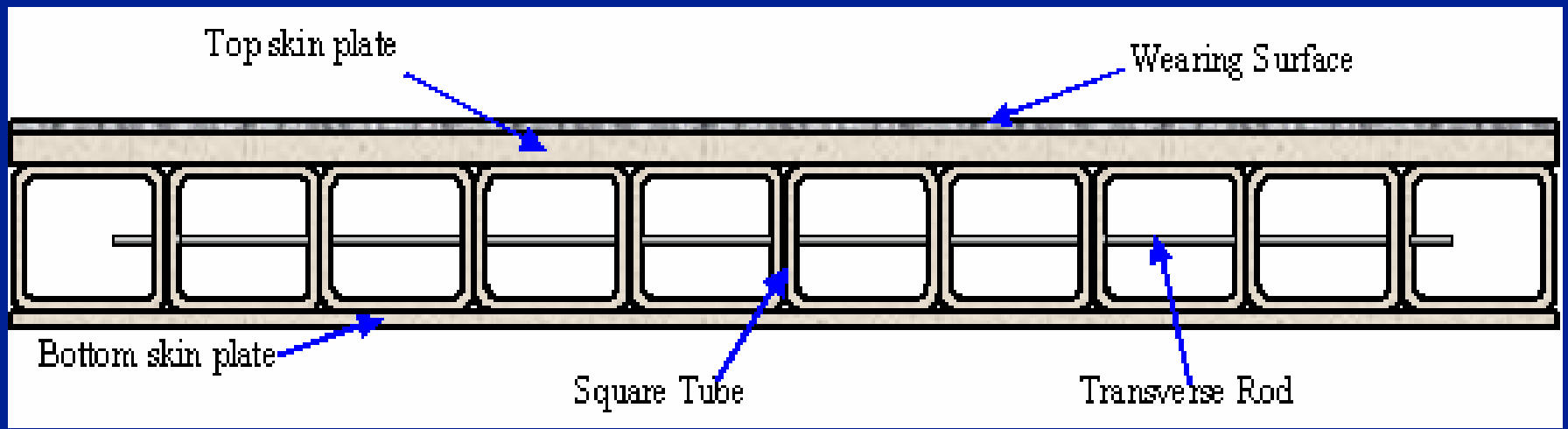

VTRC
Virginia Transportation Research Council

FRP Deck systems
Troutville Weigh Station Experimental Project

- The laboratory test program was designed to test the deck panel system's stiffness and strength
- Developed and tested the J-bolt deck-to-girder connection
- Steel plate with neoprene pads and simulated tire patch used for loading contact surface

Laboratory Deck Specimen

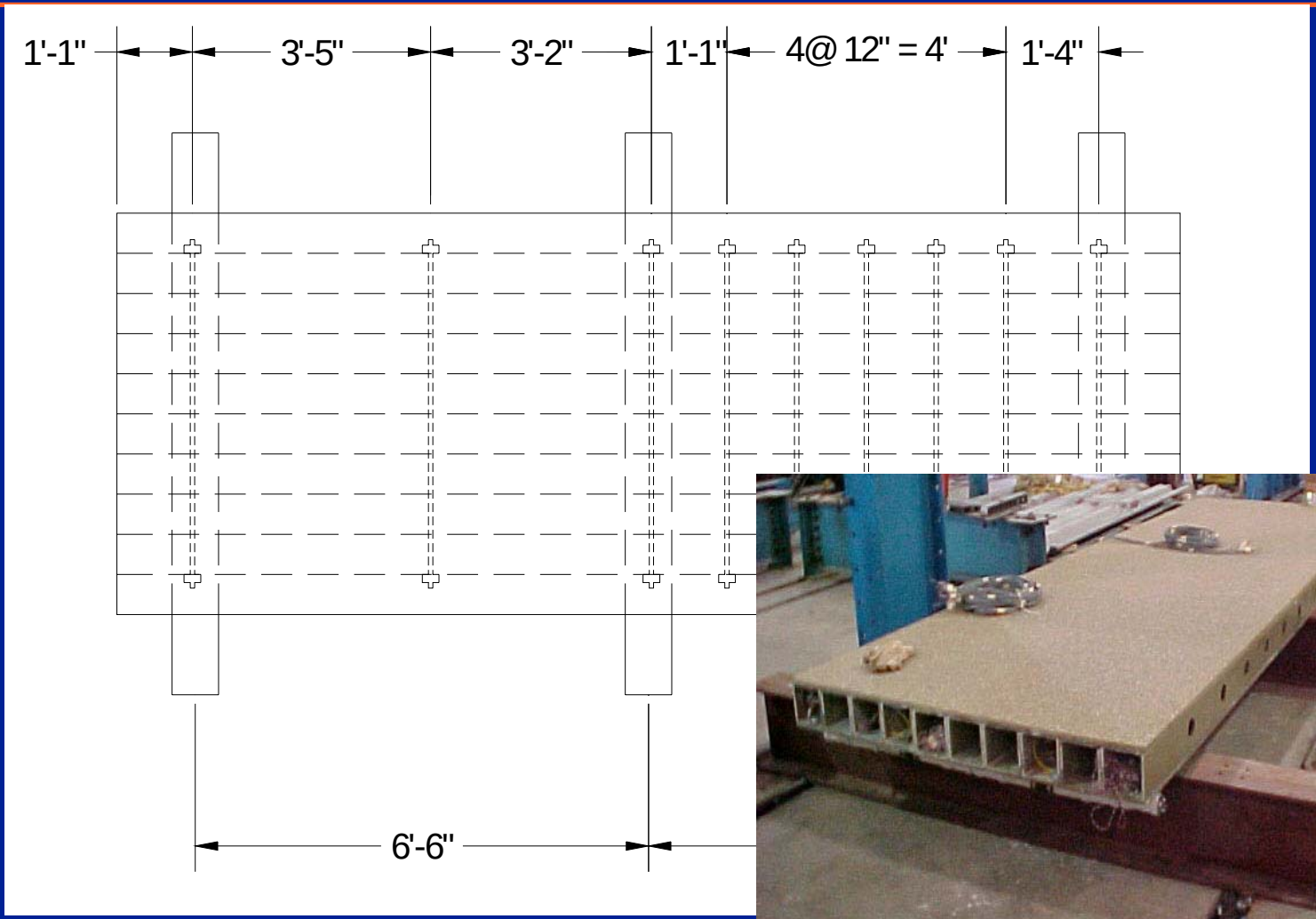

FRP Bridge Deck System
Deck-to-Beam Connection

- Final connection design used in Weigh Station was a hooked bole assembly

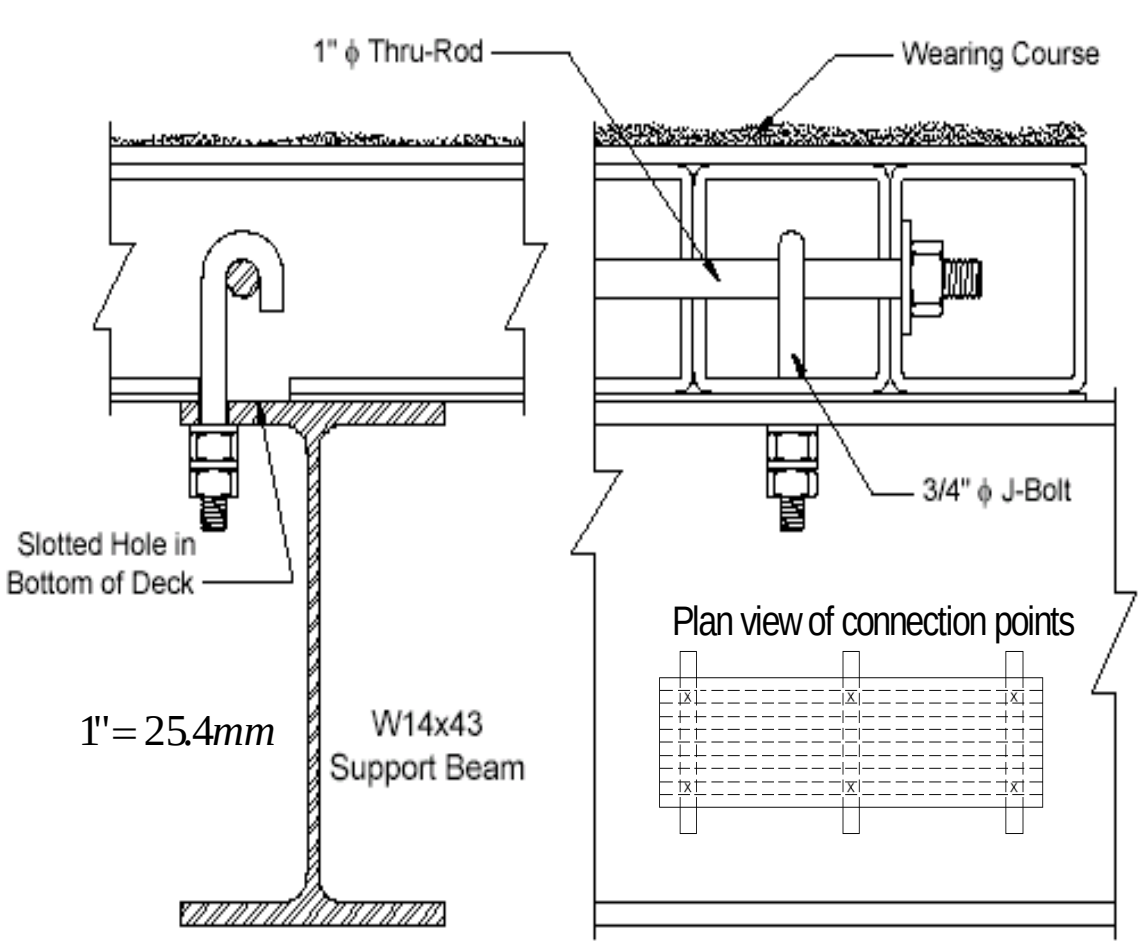

FRP Bridge Deck System
Loading Patches Used In Laboratory Tests

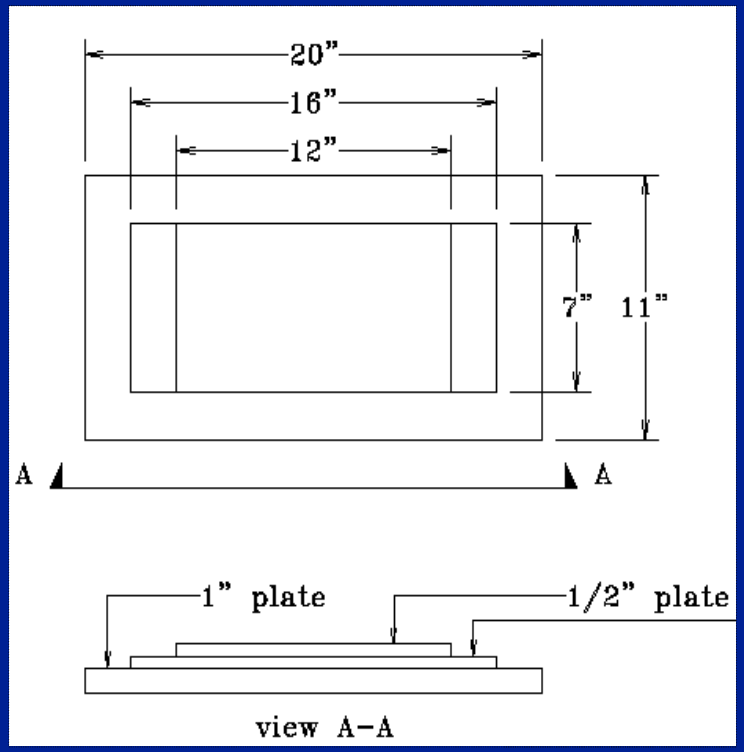

a). Steel Patch (1"=254mm)

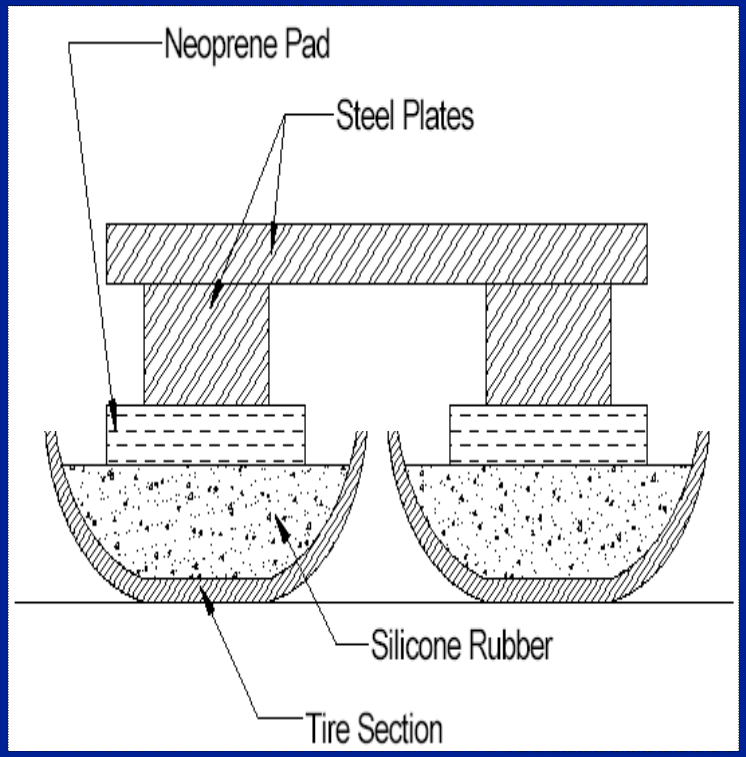

b.) Simulated Tire Patch (not to scale)

Laboratory Testing to Failure

- Punching Shear failure with steel patch and neoprene pad
- Local flexural failure of top plate and webs with simulated tire patch

FRP Bridge Deck System
Punching Shear

VTRC
Virginia Transportation Research Council

Simulated Tire Patch Test to Failure

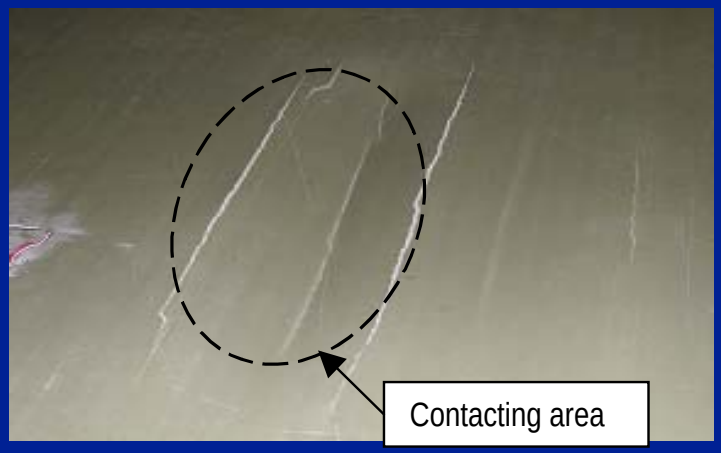

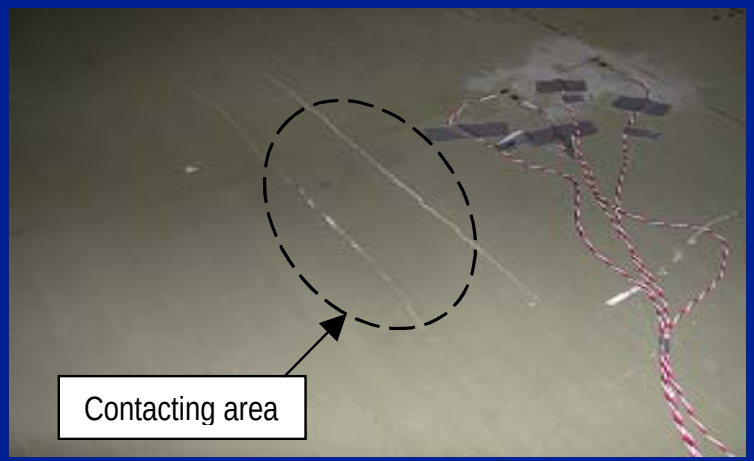

Field Test of FRP Deck System

VTRC
Virginia Transportation Research Council

Field Tests of FRP Deck systems

- Field tests indicated that the free edges of the tubular deck members should not be located within the load lanes
- Stiffness loss 14.2% to 30.2% after 8 months in service (about 4 million fatigue loading cycles produced from traveling trucks)
- Strength loss 6.9% (132K) after 4 million live load cycles
- Service load deflections of L/350 to L/400 were measured for trucks that were at the legal weight limit
- Strain gauge measurements indicated no additional loss of stiffness after 7 million cycles

FRP Deck systems
Summary

- The FRP deck system provided the strength, stiffness, and durability needed to qualify the system as an acceptable lightweight bridge deck system
- Laboratory tests indicated that the ultimate strength of the system was dominated by local failures
- Factor of safety against failure was about 5
- Successful assembly and performance of the deck panels was not dependent on the use of tie rods through the deck section
- Deck system did not substantially degrade in stiffness or strength in service or over time

The Hawthorne St. Bridge in Covington, VA

- FRP deck system will replace existing RC deck to reduce dead load and raise posting

VTRC
Virginia Transportation Research Council

Hawthorne Street Bridge Rehabilitation

- 75’ clear span historic Phoenix Truss superstructure
- Stringers, floorbeams and deck will be replaced
- FRP bridge deck is 25 psf versus 75 psf for existing reinforced concrete deck
- The posted load is currently 5 tons, and will increase to 20 tons following rehabilitation

Hawthorne Street Bridge Rehabilitation

- Bridge details developed and tested for the Hawthorne Street Bridge include:
  - Bridge deck-to-stringer connection
  - Deck panel-to-panel field splice
  - FRP sidewalk details

Hawthorne Street Bridge Rehabilitation

- Field tests will be conducted to measure:
  - Load distribution
  - Degree of composite action,
  - Two-way versus one-way bending
  - Dynamic load allowance

GFRP Bars as Top Mat Reinforcement for Concrete Bridge Decks

VTRC
Virginia Transportation Research Council

Basic Tensile Properties

- Three bar suppliers used: Hughes, Marshall, Pultrall
- Three sizes tested: #4, #5, #6
- Guaranteed tensile strength = 67 ksi (based on mean – three standard deviations)
- Design tensile strength = 47 ksi (70 % of 67 ksi)
- Modulus of Elasticity = 5800 ksi

Strength Degradation

- 90 specimens tested
- Specimens were grout encased #3 FRP bars
- Specimens submerged in temperature controlled water for varying time periods (up to 300 days) and removed at intervals for testing
- Results show that 70 % knock down to account for strength degradation is appropriate

Testing of Laboratory Prototype of Bridge Deck

VTRC
Virginia Transportation Research Council

Laboratory Testing

- Slab containing FRP rebars met or exceeded design expectations
- Further study of crack widths and one way shear design recommended

Companion Slabs in Weigh Station Test Bed

VTRC
Virginia Transportation Research Council

Live Load Test of Bridge

VTRC
Virginia Transportation Research Council

VTRC

Virginia Transportation Research Council