Showcase on

Virginia Fiber-Reinforced Polymer Composites: Materials, Design, and Construction

September 20-21, 2006, Bristol, Virginia

State of the Art in FRP Bridge Decks

Aixi Zhou and Jack Lesko

Dept. of Engineering Science & Mechanics

Virginia Tech, Blacksburg, VA 24061-0219

Phone: (540) 231-3249 (540) 231-5259

Email: azhou@vt.edu jlesko@vt.edu

U.S. Department of Transportation Federal Highway Administration

VDOT

VTRC Virginia Transportation Research Council

VirginiaTech Invent the Future

Outline

- Introduction to FRP deck systems
- Structural behavior of FRP decks
- Structural analysis of FRP decks
- Connections for FRP decks

© Copyright, 2006, Zhou & Lesko, Virginia Tech

FRP Decks in Consideration

Structural Function

- Decks that bear directly on abutments *(Slab Design)*
- Decks that bear on girders *(Load Distribution Factor Design)*

© Copyright, 2006, Zhou & Lesko, Virginia Tech

FRP Bridge Deck Systems

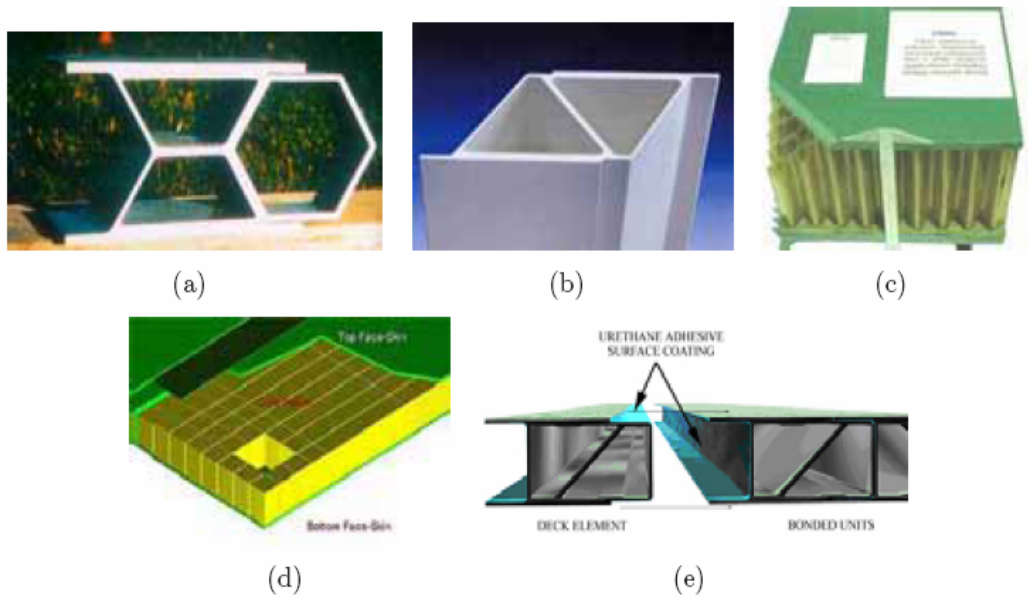

Typical FRP Decks: (a) Superdeck, (b) ASSET, (c) Kansas, (d) Hardcore, (e) DuraSpan

Two basic types:
multi-cellular and sandwich panels

Manufacturing:
Pultrusion, resin transfer molding (sandwich construction), plus adhesive bonding

Materials:
Fibers: E-glass
Resins: Polyester, epoxy, vinyl ester

© Copyright, 2006, Zhou & Lesko, Virginia Tech

Comparisons of Commercial FRP Decks

Deck systems (Available in the U.S.)	Depth (mm)	[1]Weight (kg/m^2)	Cost ($\$/m^2$)	[2]Deflection Reported
Sandwich Construction				
Hardcore Composites (VARTM)	152-710	98-112	570-1184	L/785
KSCI (Hand/automated lay-up)	127-610	76	700	L/1300
Adhesively Bonded Pultrusions				
DuraSpan	194	90	700-807	L/450
Superdeck	203	107	807	L/530
EZSpan	229	98	861-1076	L/950
Strongwell	120-203	112	700	L/605

[1] Without wearing surface. [2]Assumes plate action.

Zhou, 2002

© Copyright, 2006, Zhou & Lesko, Virginia Tech

Cost and Weight Comparisons of Different Decks

Type of decks	Cost ($\$ / m^2$)	Weight (kN / m^2)
Concrete (Cast-in-place, Precast)	160-220	4.0-5.0
Prestressed Concrete	160-270	4.0-5.0
Concrete filled steel grid	220-270	3.5-4.0
Half filled grid	220-270	2.5-3.0
Open grid	270-325	1.0-1.25
Aluminum orthotropic	530-640	1.5-2.0
Steel orthotropic	640-860	4.0-4.5
Glulam timer	359-380	1.9*
FRP sandwich construction	570-1184	0.75-1.1
FRP adhesively bonded pultrusions	700-1076	0.88-1.1

Zhou, 2002

© Copyright, 2006, Zhou & Lesko, Virginia Tech

Outline

- **Introduction to FRP deck systems**
- **Structural behavior of FRP decks**
- **Structural analysis of FRP decks**
- **Connections for FRP decks**

© Copyright, 2006, Zhou & Lesko, Virginia Tech

Behavior of FRP Decks – Lab Conditions

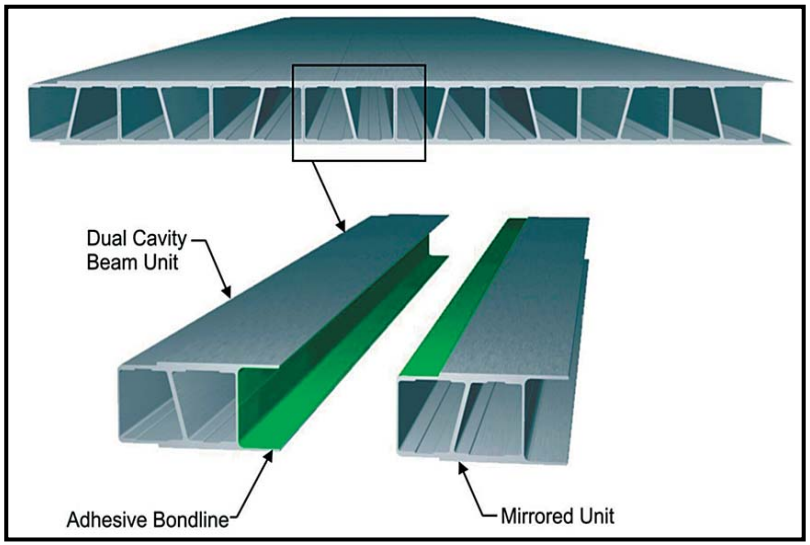

DuraSpan 766 bridge deck

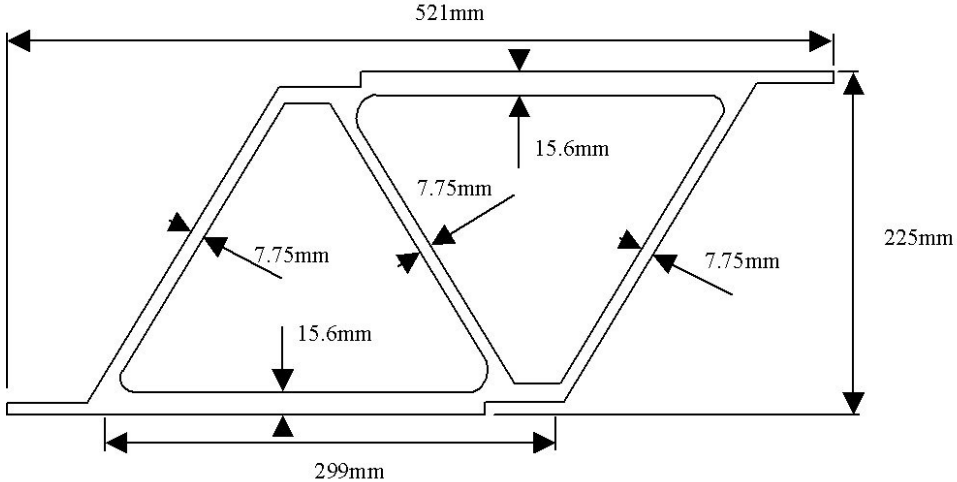

ASSET® deck

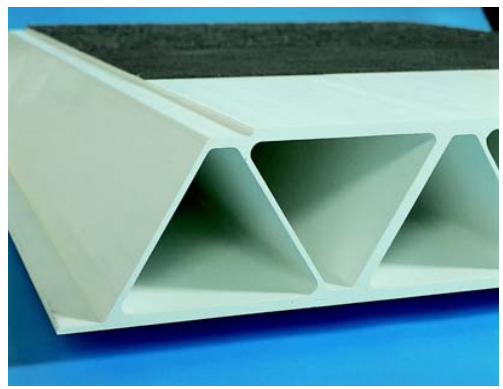

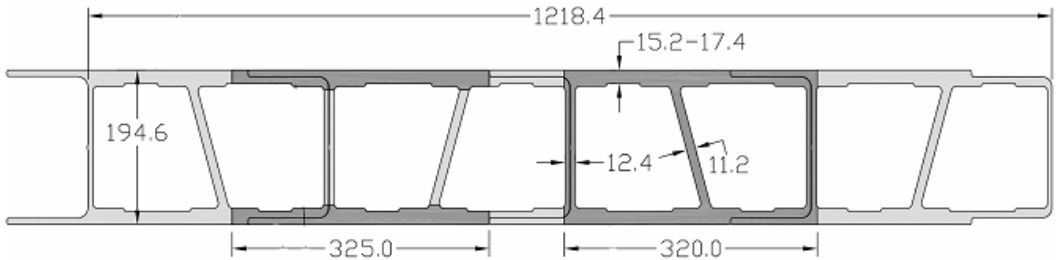

Units in [mm]

© Copyright, 2006, Zhou & Lesko, Virginia Tech

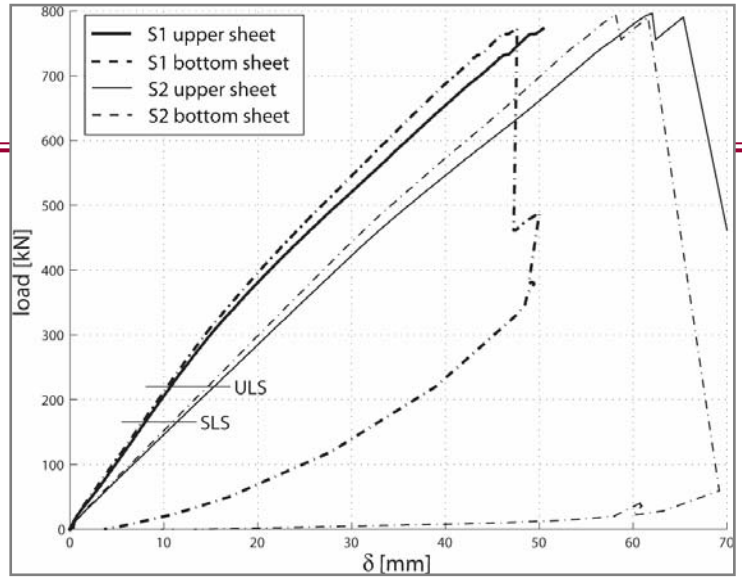

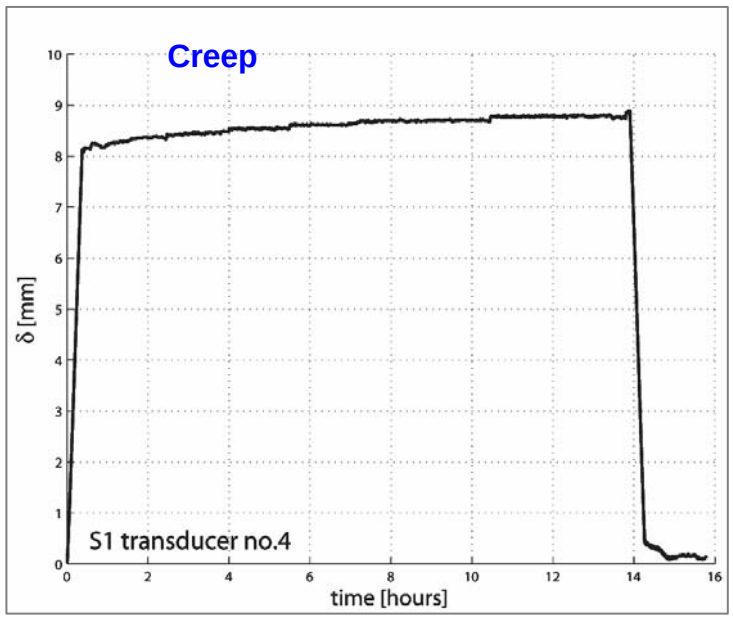

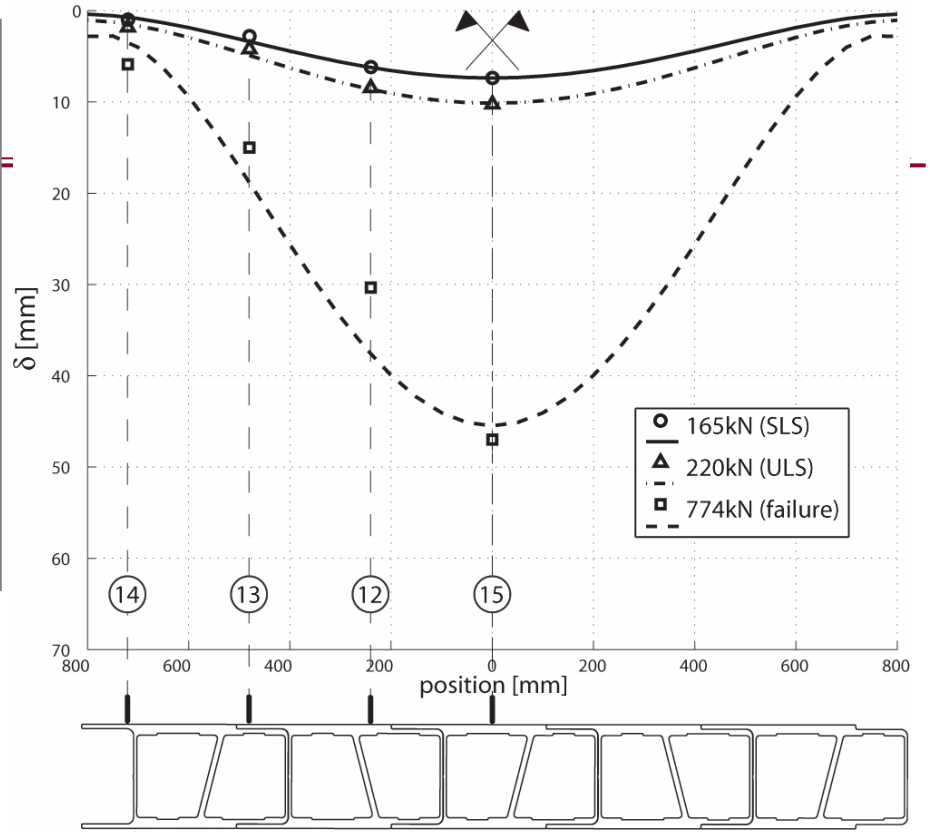

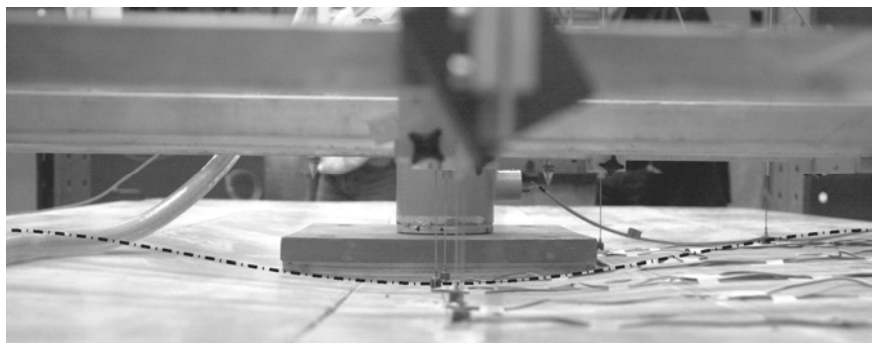

Keller et al. 2005

© Copyright, 2006, Zhou & Lesko, Virginia Tech

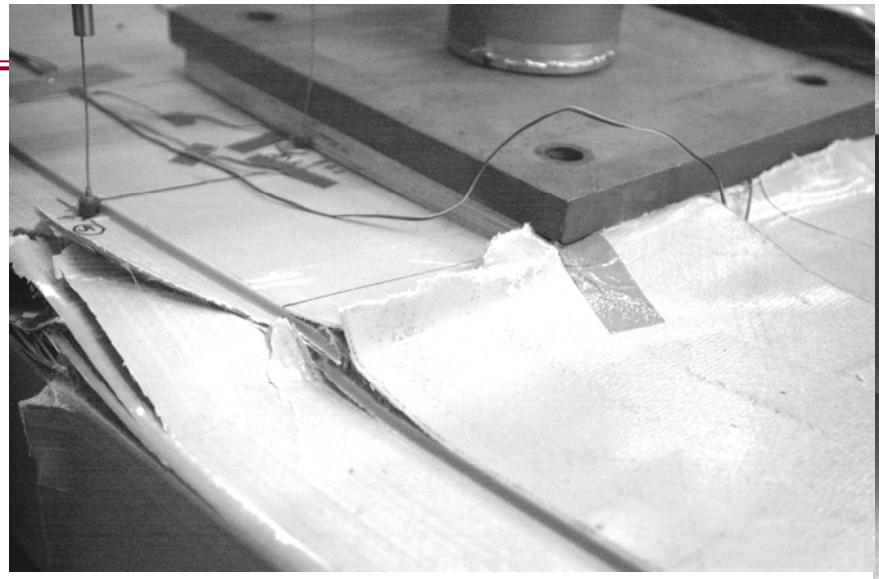

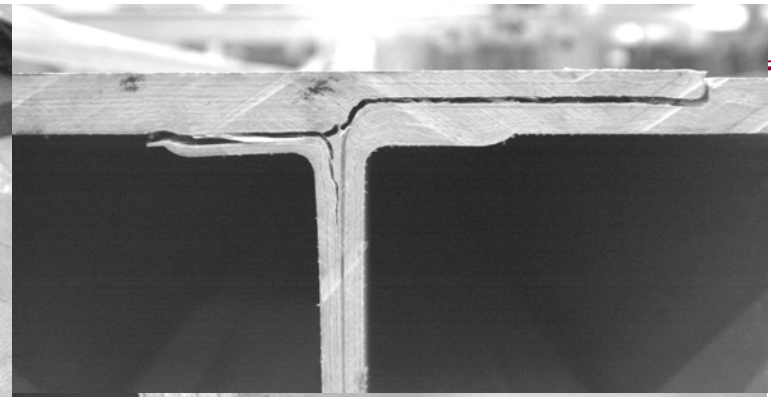

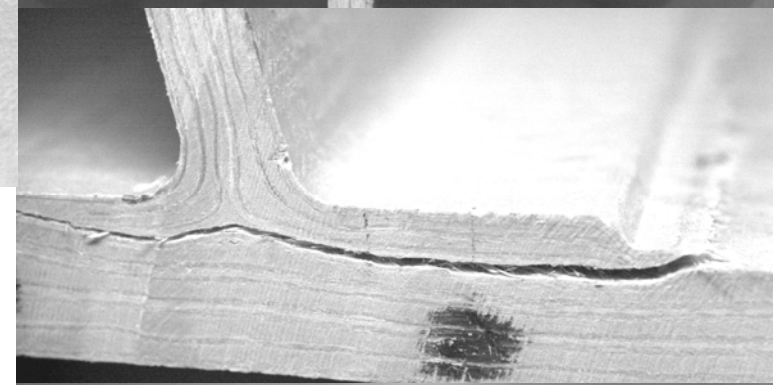

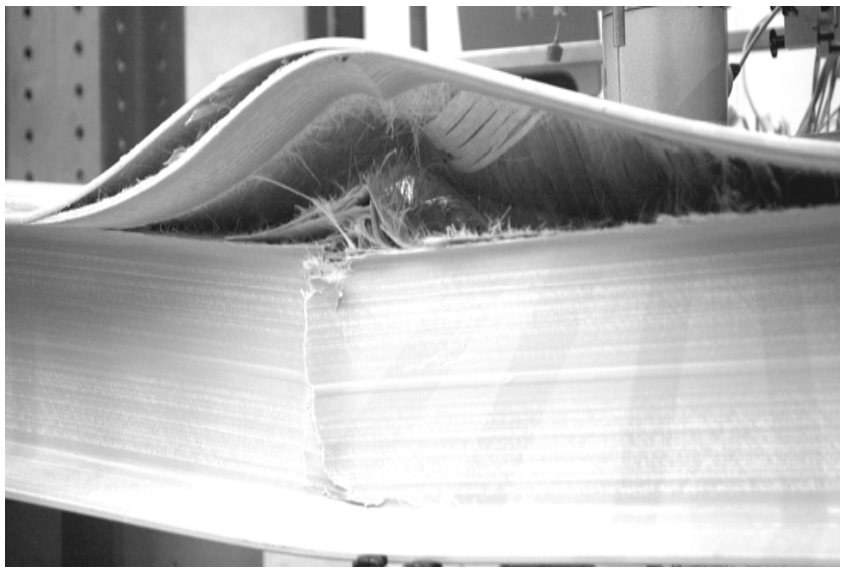

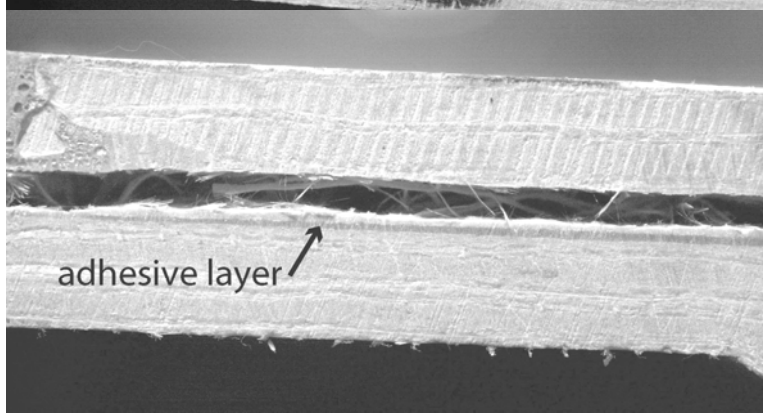

© Copyright, 2006, Zhou & Lesko, Virginia Tech

In-plane Shear

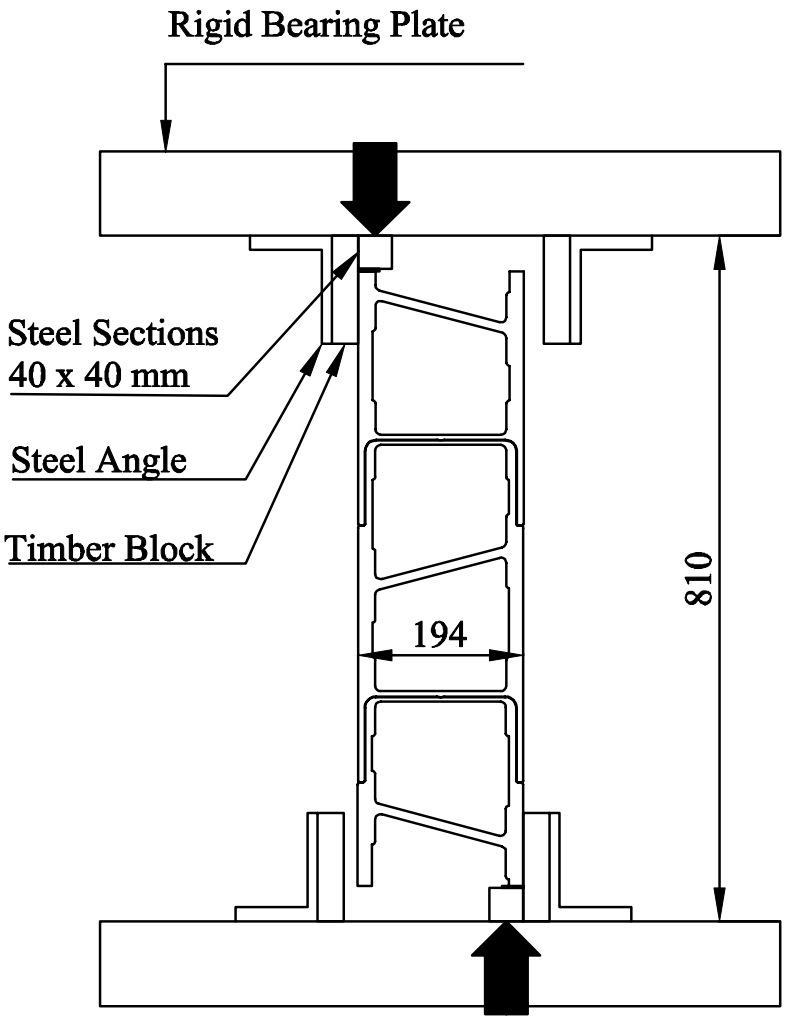

Keller et al. 2004

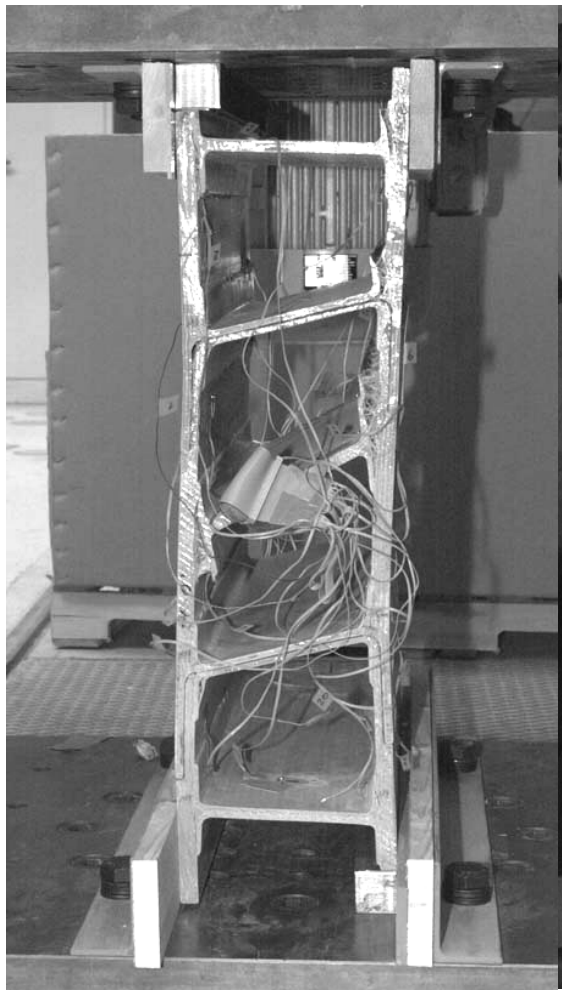

DuraSpan

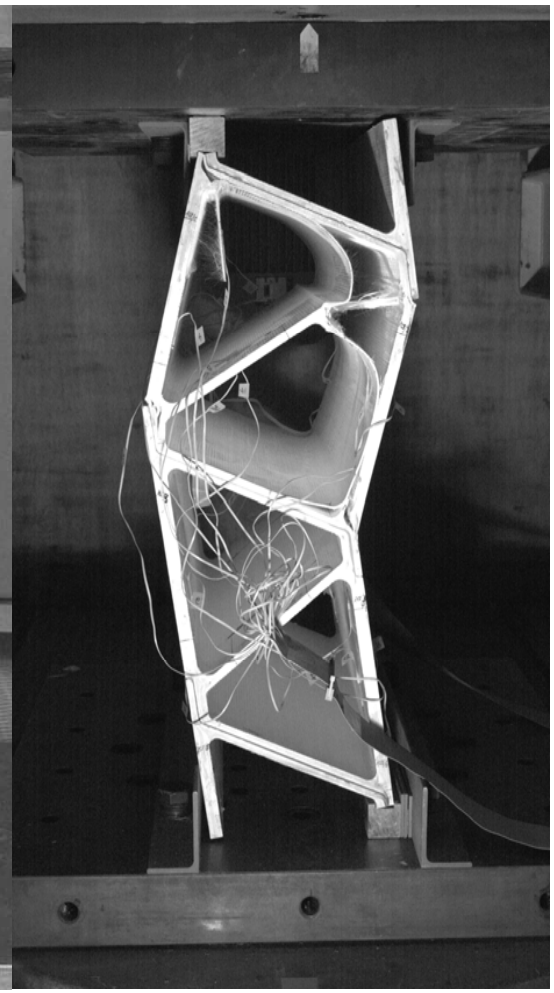

ASSET

© Copyright, 2006, Zhou & Lesko, Virginia Tech

Comparison of DuraSpan and ASSET In-plane Performance

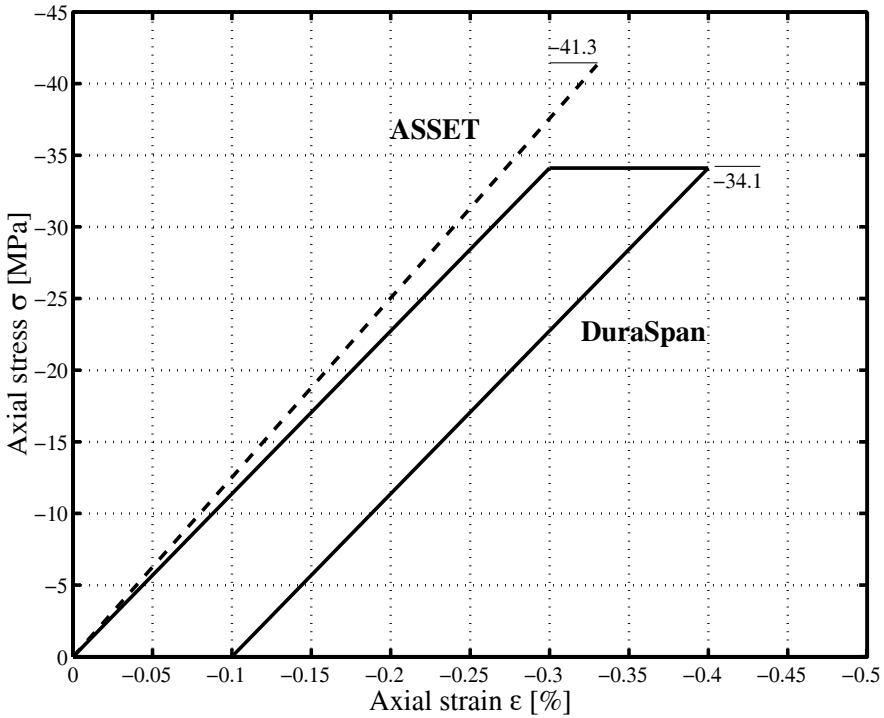

In-plane compression

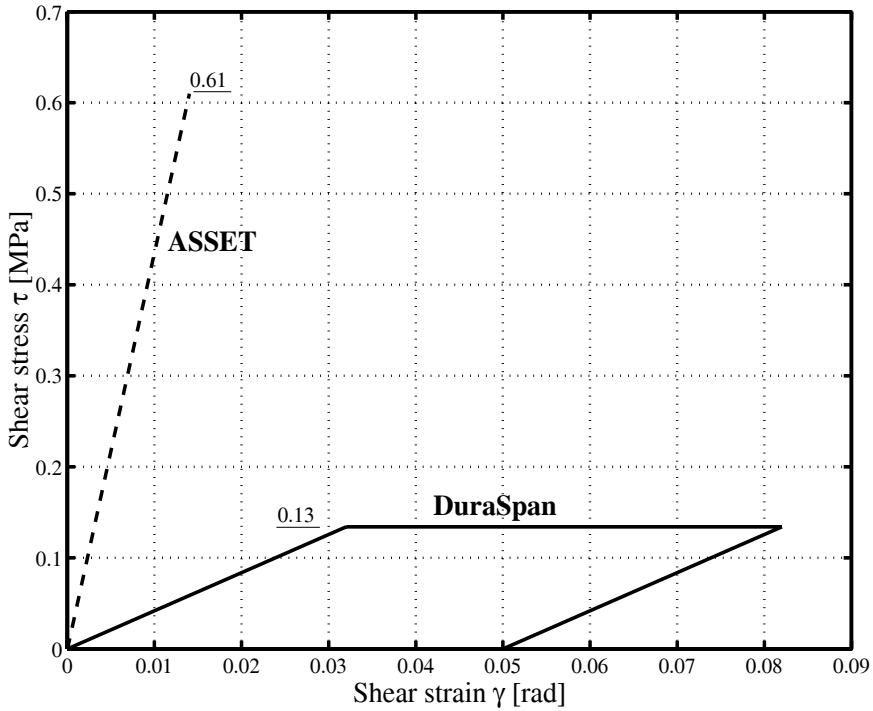

In-plane shear

Keller et al. 2005

© Copyright, 2006, Zhou & Lesko, Virginia Tech

Effect of Loading Patch on Testing

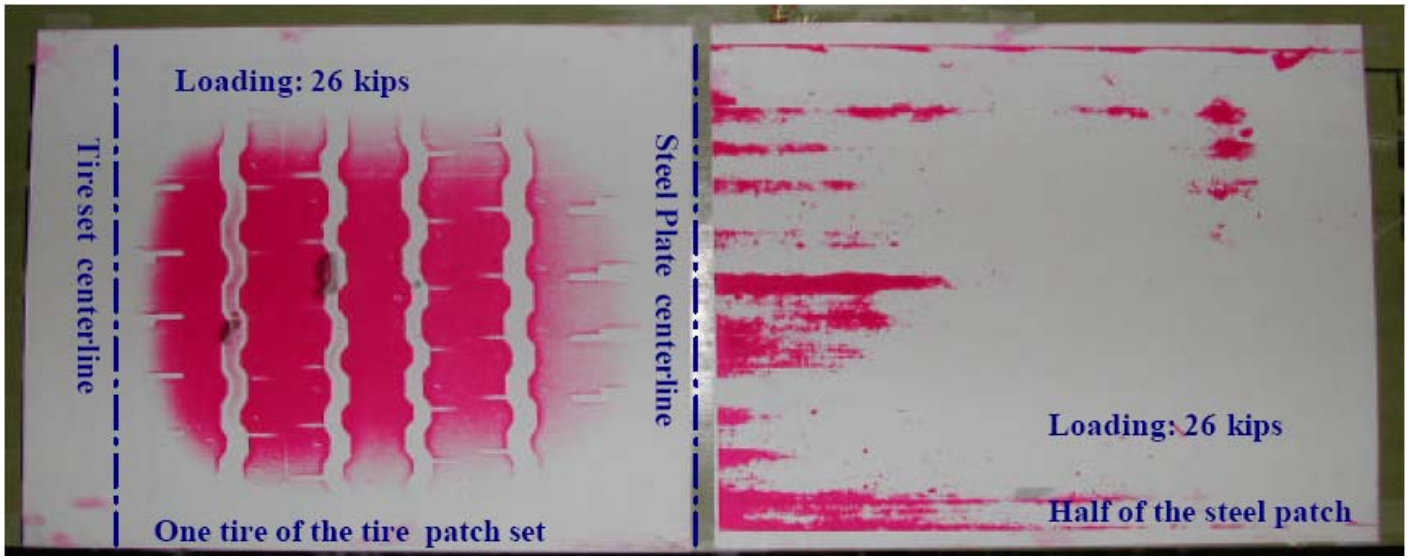

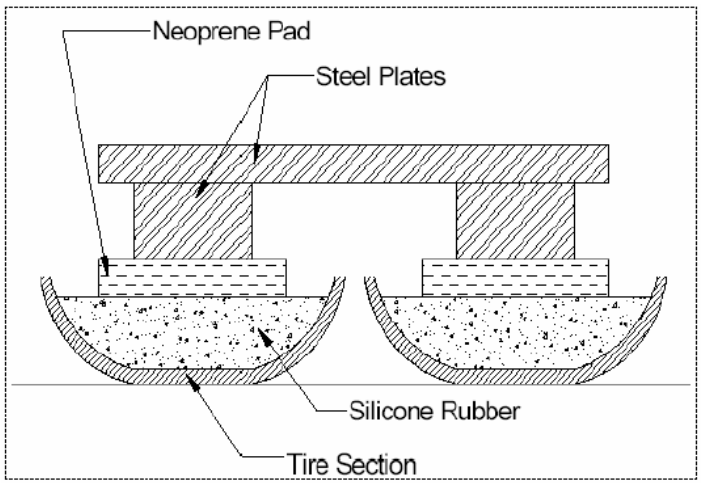

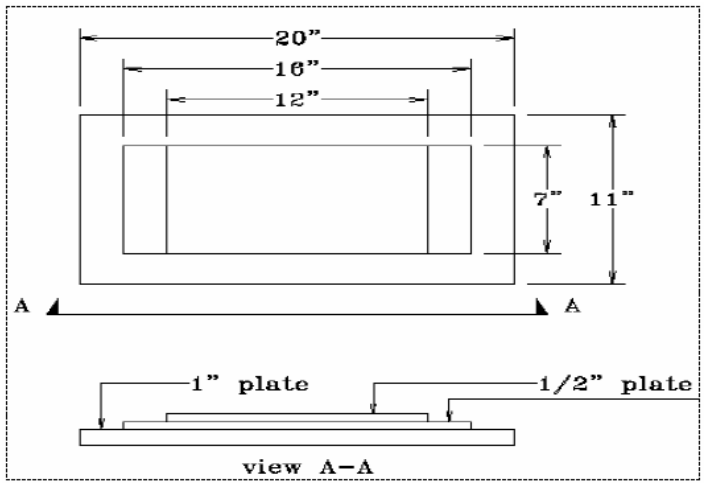

© Copyright, 2006, Zhou & Lesko, Virginia Tech

Testing Set-up

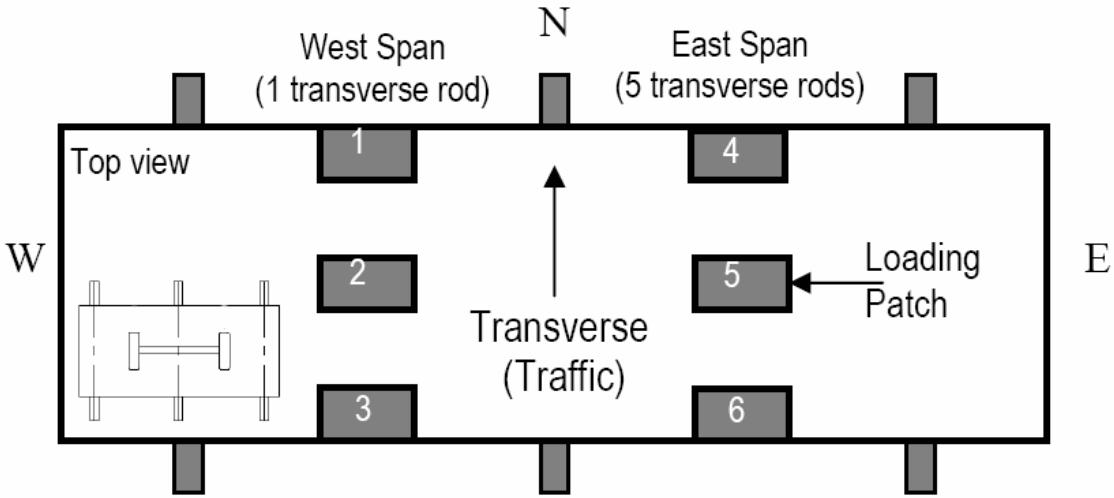

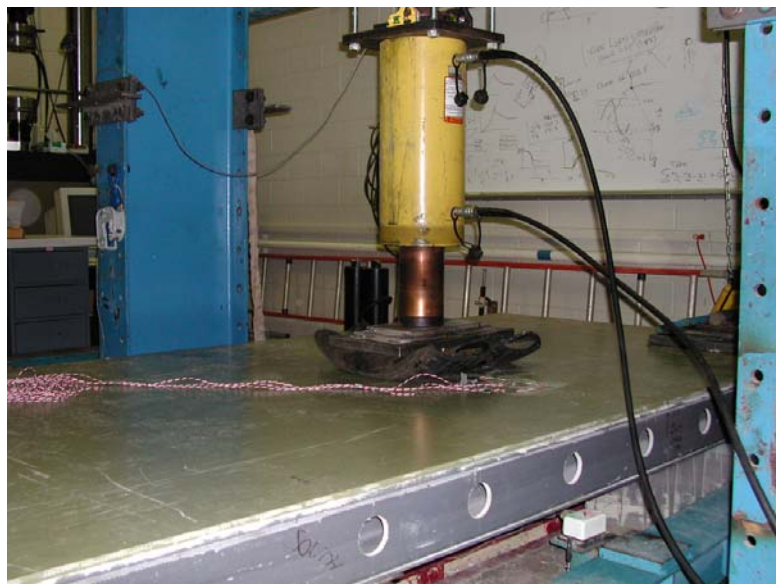

© Copyright, 2006, Zhou & Lesko, Virginia Tech

Effect of Loading Patch on Stiffness Testing

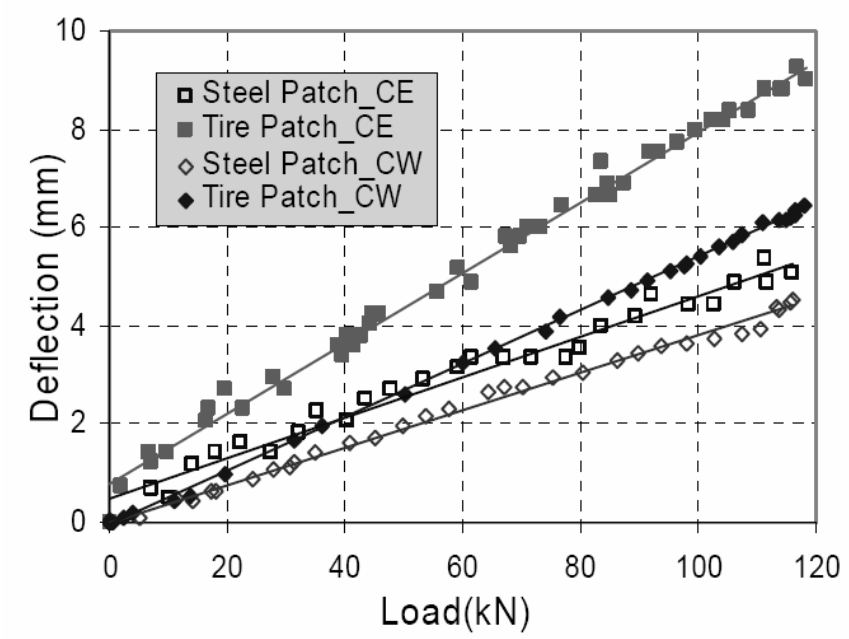

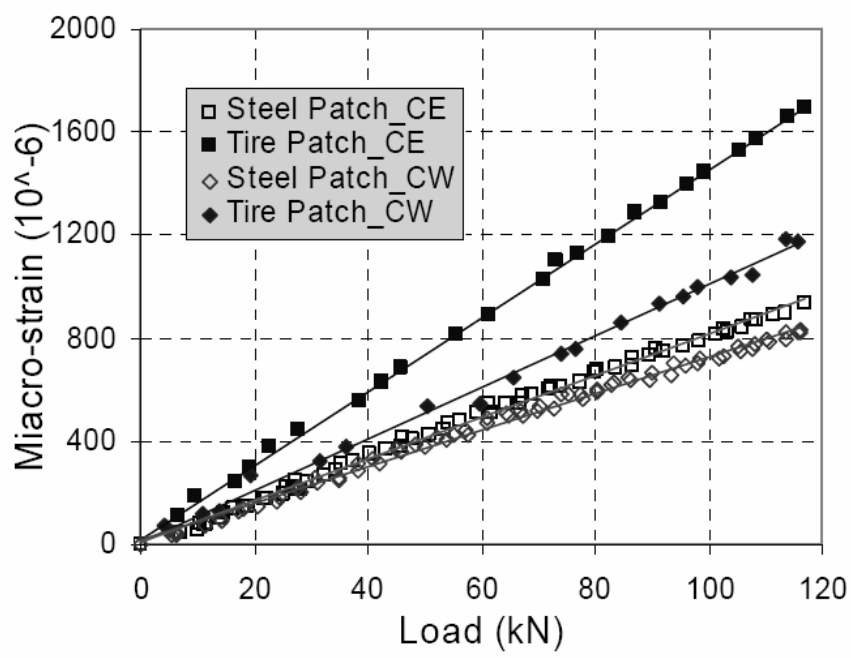

Under same loading level and locations, simulated tire patch produced larger deflection and strain

Zhou et al. 2005

© Copyright, 2006, Zhou & Lesko, Virginia Tech

Effect of Loading Patch on Strength Testing

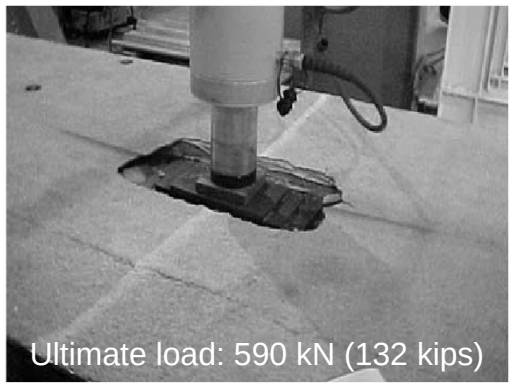

Steel Patch

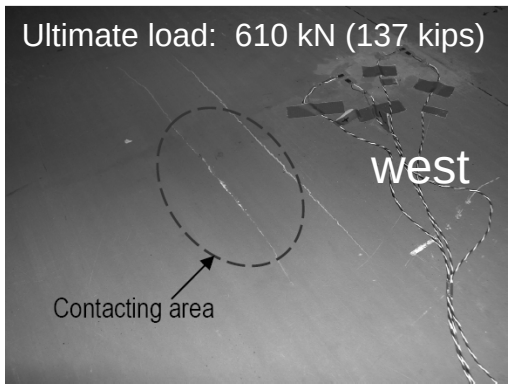

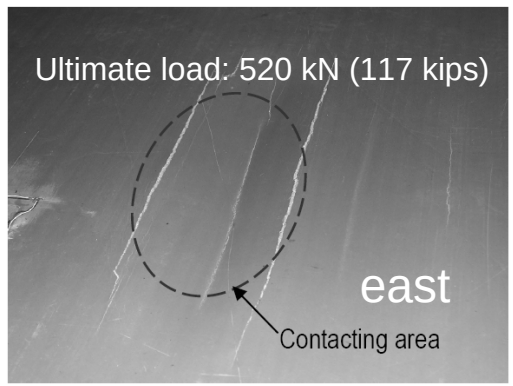

Simulated Tire Patch

Zhou et al. 2005

© Copyright, 2006, Zhou & Lesko, Virginia Tech

Steel-free FRP/Concrete Modular System

Cheng et al., 2004

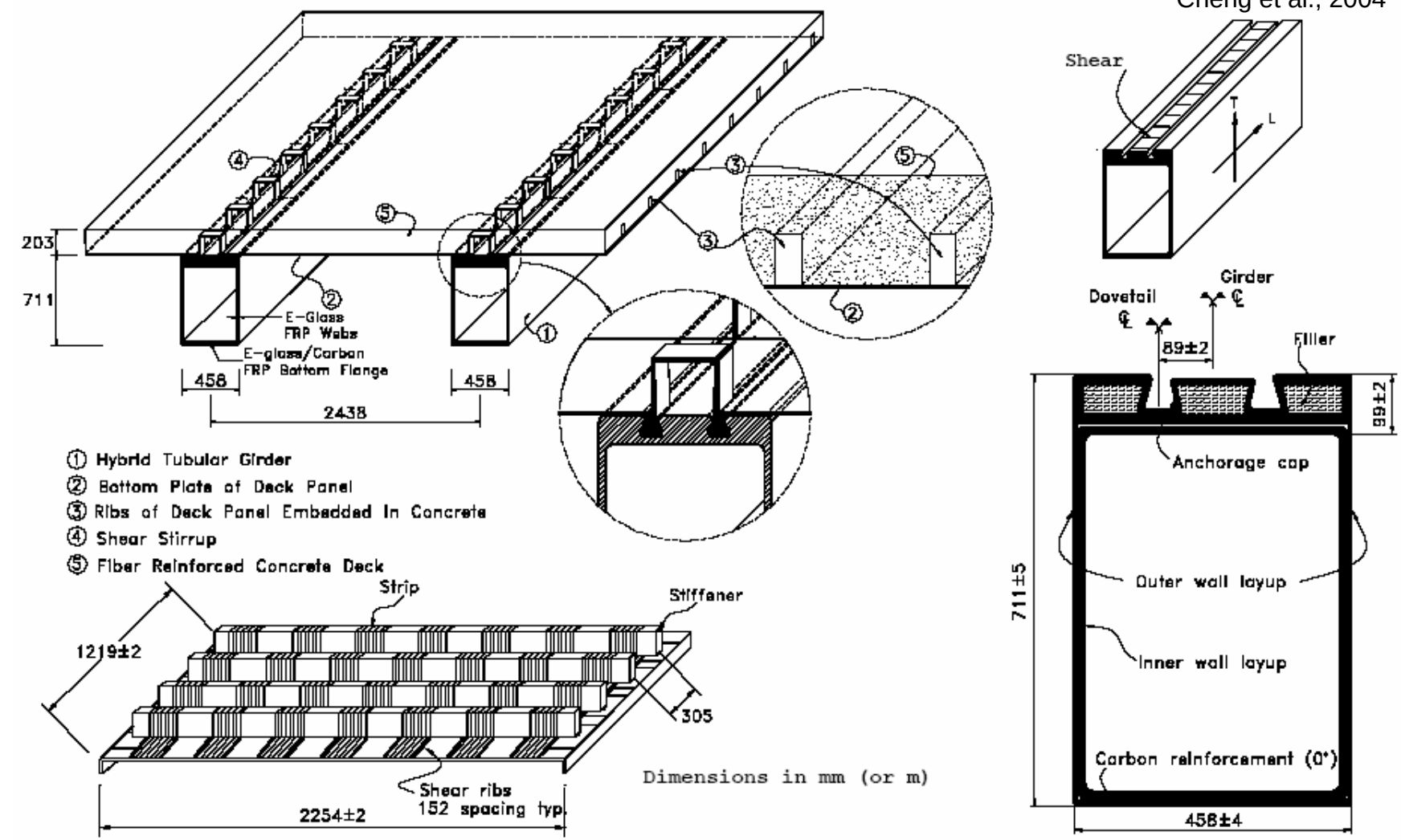

© Copyright, 2006, Zhou & Lesko, Virginia Tech

Sandwich Decks Through VARTM

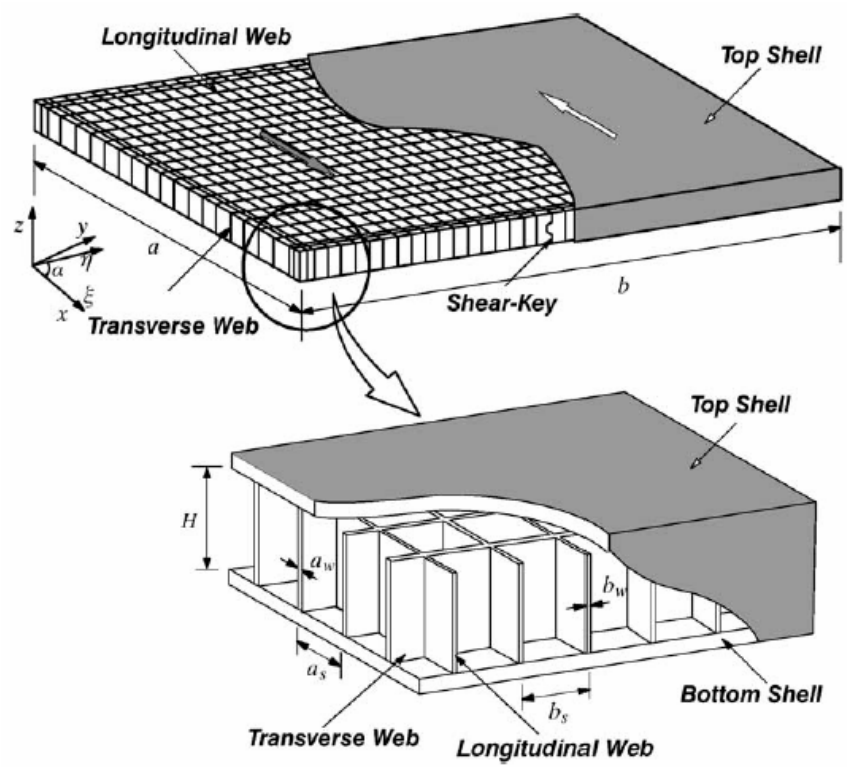

Aref et al., 2005

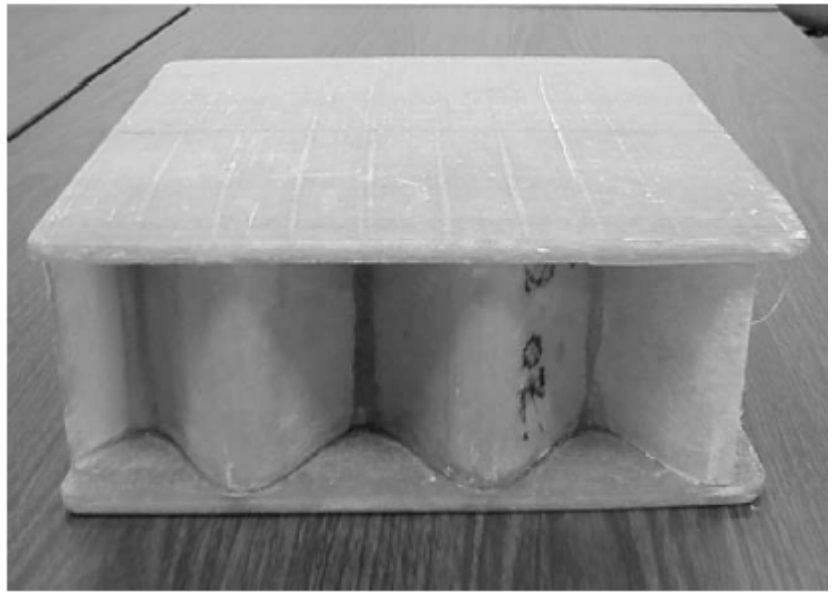

Davalos et al., 2001

© Copyright, 2006, Zhou & Lesko, Virginia Tech

Outline

- **Introduction to FRP deck systems**
- **Structural behavior of FRP decks**
- **Structural analysis of FRP decks**
- **Connections for FRP decks**

© Copyright, 2006, Zhou & Lesko, Virginia Tech

Simplified Beam Analysis of FRP Decks

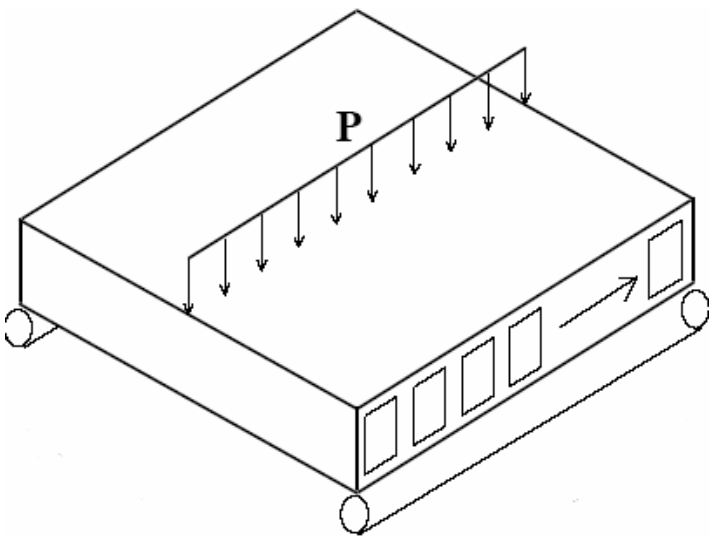

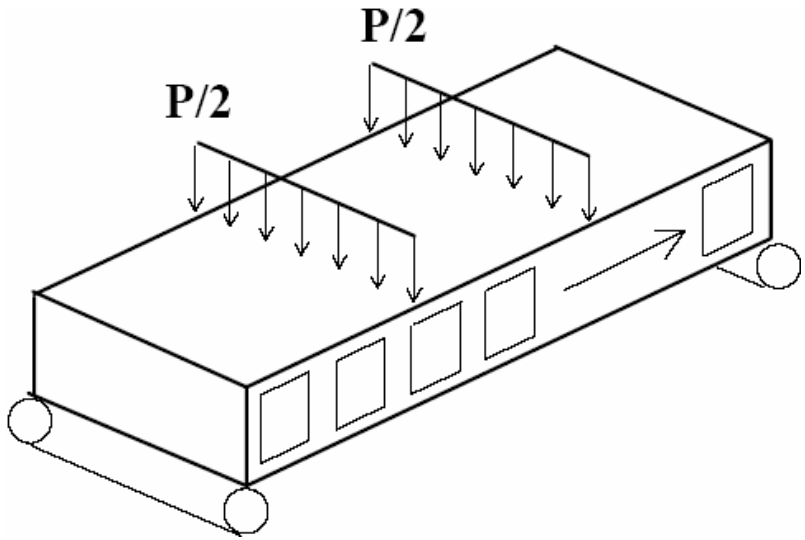

Timoshenko Beam:

$$M^T = -EI\frac{d\psi}{dx}; V^T = -GAK_s\left(\psi - \frac{dw^T}{dx}\right); -EI\frac{d^3\psi}{dx^3} = \frac{d^2M^T}{dx^2} = -q$$

Euler-Bernoulli Beam:

$$M^E = -EI\frac{d^2w^E}{dx^2}; V^E = -EI\frac{d^3w^E}{dx^3}; -EI\frac{d^4w^E}{dx^4} = \frac{d^2M^E}{dx^2} = -q$$

Use equivalent beam properties, only for decks with two opposite sides free.

© Copyright, 2006, Zhou & Lesko, Virginia Tech

Equivalent Plate Analysis Procedures

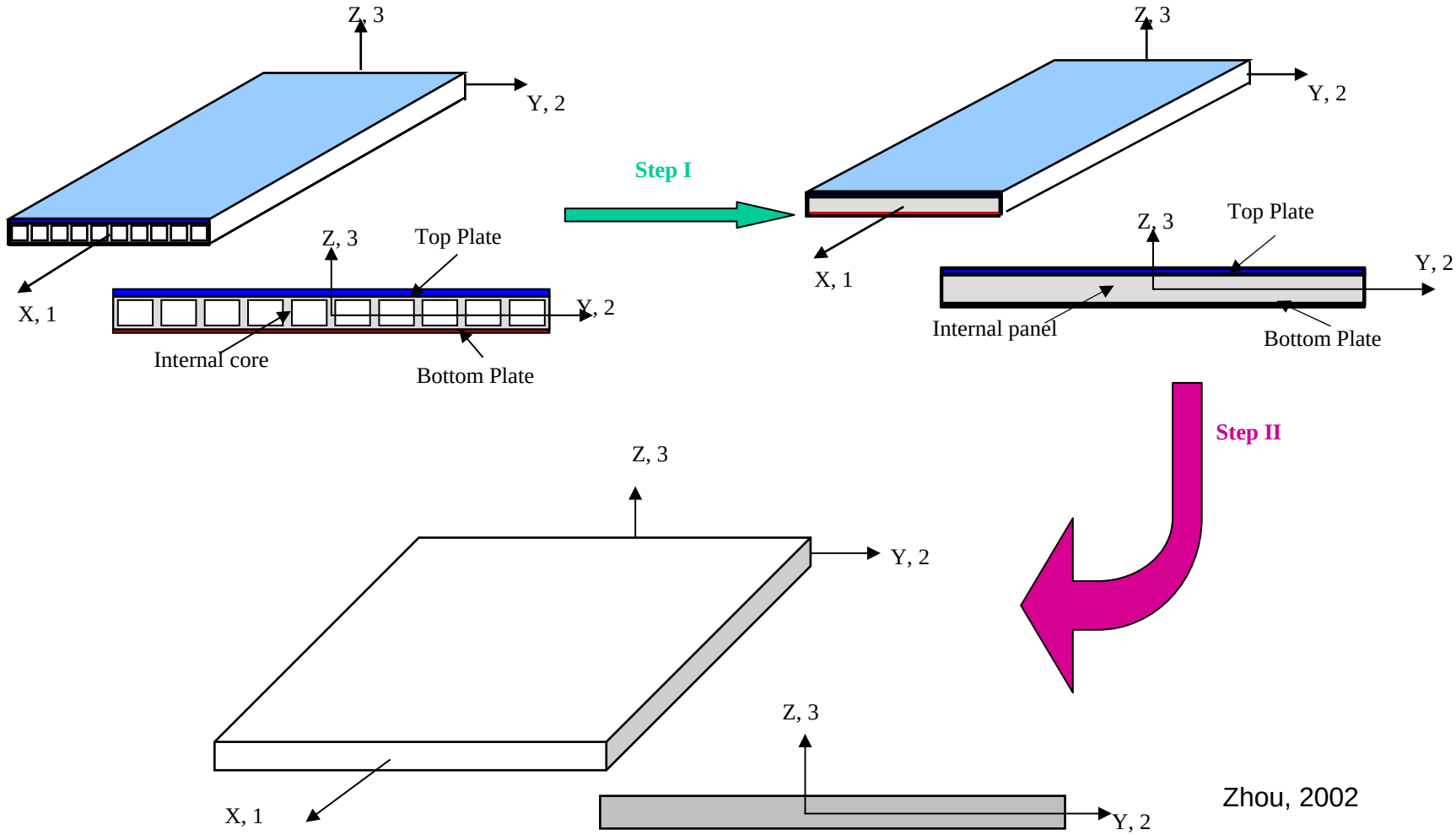

Zhou, 2002

© Copyright, 2006, Zhou & Lesko, Virginia Tech

Equivalent Plate Analysis Using CLPT

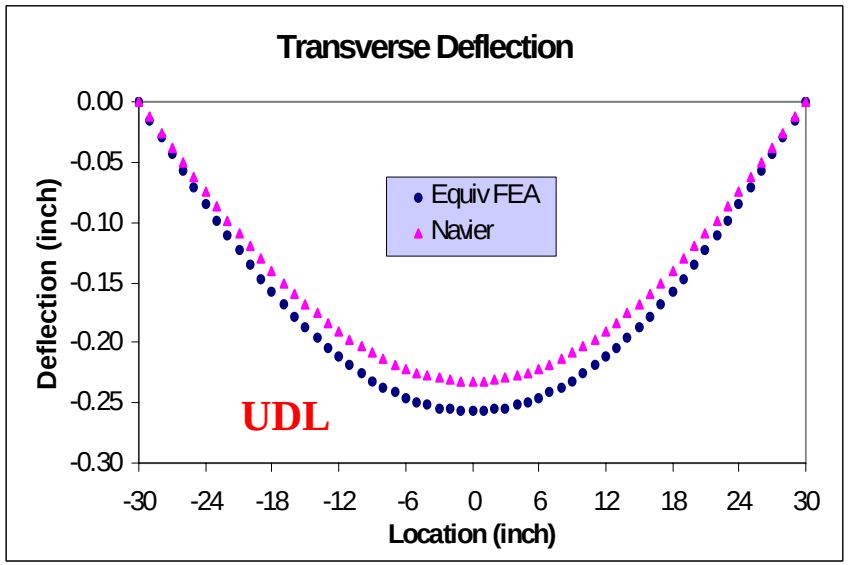

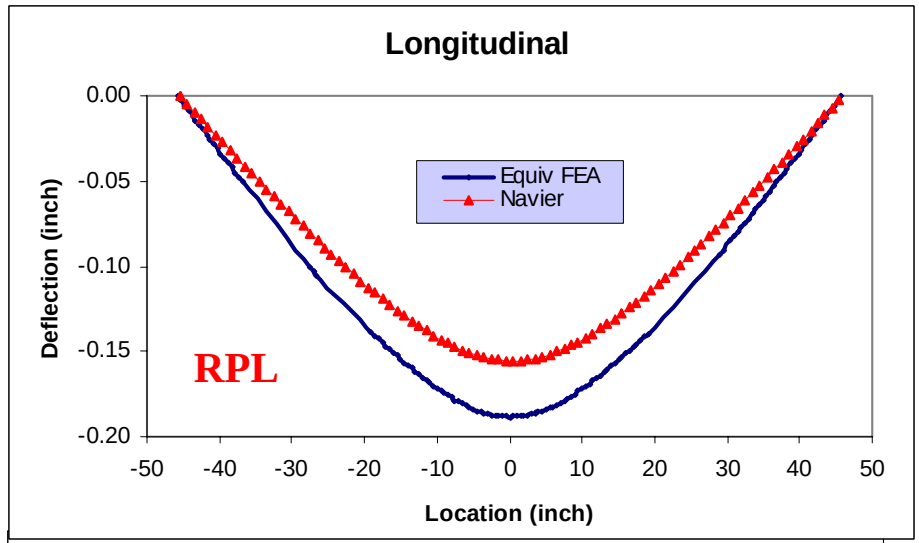

Differences using Classical Laminated Plate Theory (CLPT):

UDL: -9.7%
RPL:-15%
CPL: -17%

FEA used shear deformable shell elements

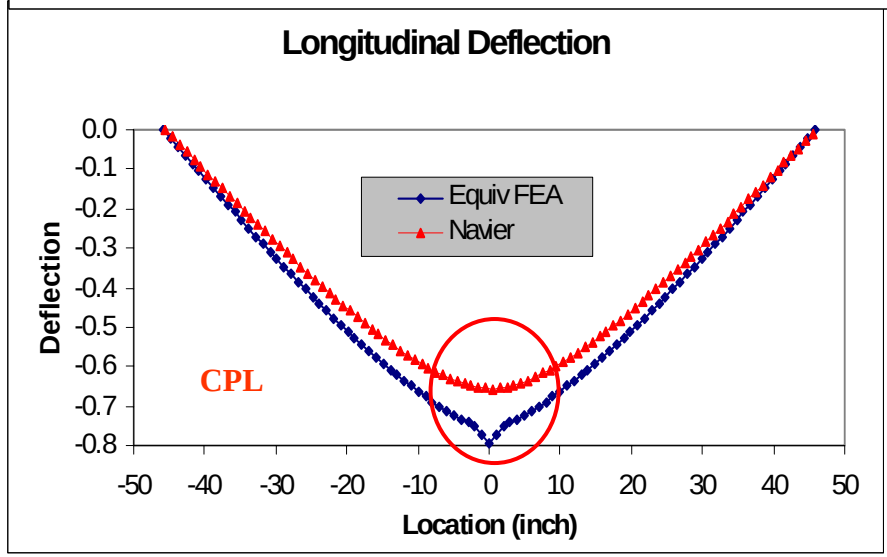

© Copyright, 2006, Zhou & Lesko, Virginia Tech

FRP Deck Stiffness Analysis Procedures

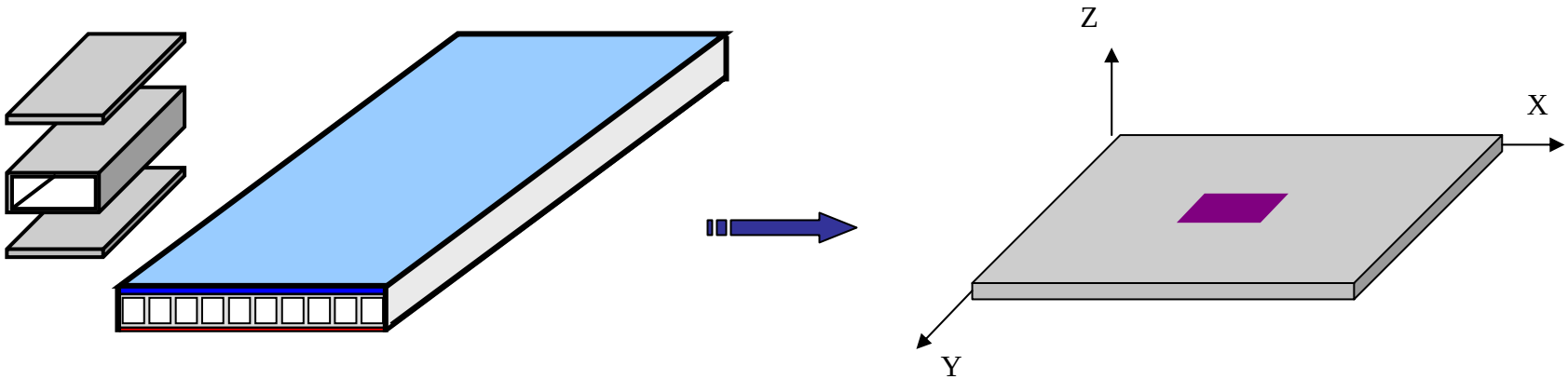

Multi-cellular Deck
(or Sandwich Deck)

Equivalent Plate

Analysis Procedures:

1. Obtained equivalent plate properties through deck's components
2. Apply loading and BCs to obtain maximum deflection
3. Compare maximum deflection with stiffness criterion (or tested result)

Zhou, 2002

© Copyright, 2006, Zhou & Lesko, Virginia Tech

Deck Stiffness Design Procedures

Specify Stiffness Requirement (Deflection Index, L/XXX)

(Design is stiffness-driven)

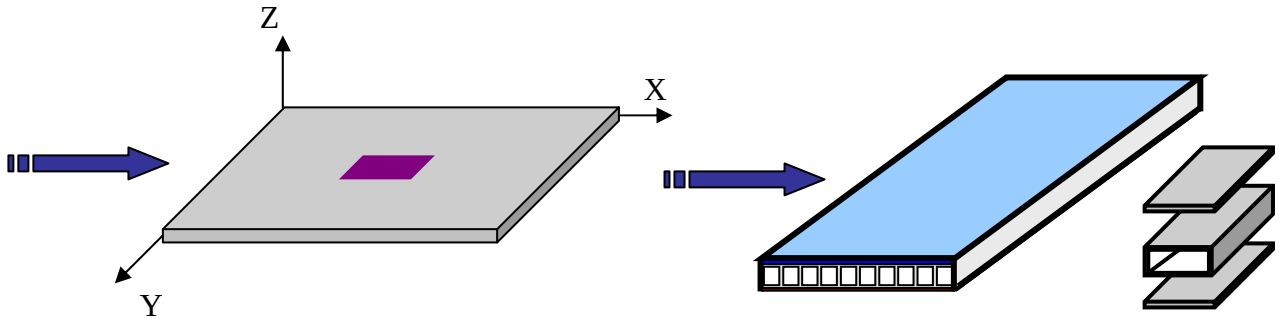

Equivalent Plate Analysis

Multi-cellular Deck (or Sandwich Deck)

Design Procedures:

1. Specify stiffness requirement (L/Span) and figure out BCs for the design
2. Choose stiffness properties to calculate maximum deflection for all possible design loads until the stiffness criterion is satisfied
3. Select FRP components and calculate equivalent plate properties to satisfy the target properties in Step 2.
4. Conduct complete FEA or lab testing to verify the design (if necessary)

Zhou, 2002

© Copyright, 2006, Zhou & Lesko, Virginia Tech

Outline

- **Introduction to FRP deck systems**
- **Structural behavior of FRP decks**
- **Structural analysis of FRP decks**
- **Connections for FRP decks**

© Copyright, 2006, Zhou & Lesko, Virginia Tech

Connections for FRP Decks

- **Three classes of connections** (Clarke, 1996)
  - Primary structural joints: carry major strength and stiffness for the whole-life;
  - Secondary structural joints: failure would be only local without compromising the entire structure;
  - Non-structural connections: exclude the external environment.

- **Three levels of structural joints** (Zhou & Keller, 2005)
  - Component Level Connection (CLC): form deck panel
  - Panel Level Connection (PLC): form bridge deck system
  - System Level Connection (SLC): form bridge superstructure

© Copyright, 2006, Zhou & Lesko, Virginia Tech

Key Manners for Joining FRP Composites

- **Mechanical fastening**
  - Well established for steel, concrete and timber structures
  - Usually require cutouts in the composites
  - Good for connections requiring dismantling
- **Adhesive bonding**
  - Simplified processing, reduced labor cost
  - No cutout required: refined joint geometry, better long-term performance
  - Quality control could be difficult in field
  - Good for permanent joints
- **Hybrid bonding/fastening**
  - Take the advantages of both methods when the connection is properly designed and constructed

© Copyright, 2006, Zhou & Lesko, Virginia Tech

Component Level Connections

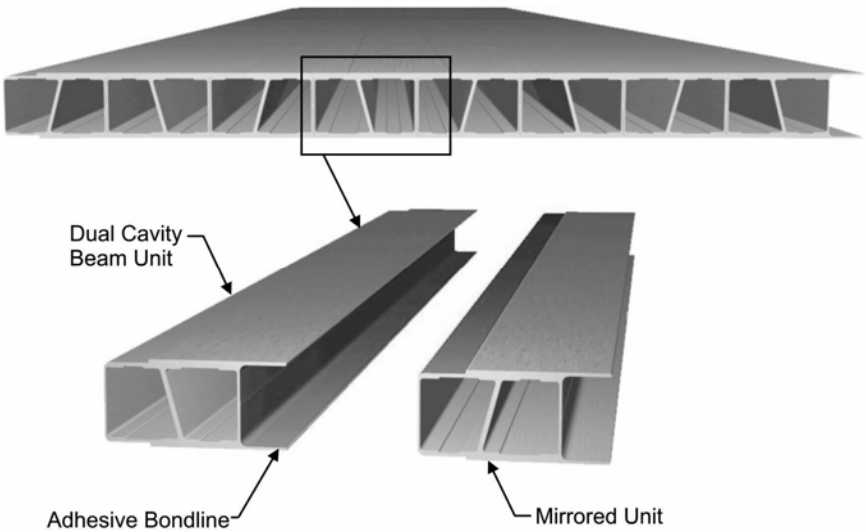

Adhesive bonding is extensively used, some with mechanical assistance

© Copyright, 2006, Zhou & Lesko, Virginia Tech

Panel-Panel Connections

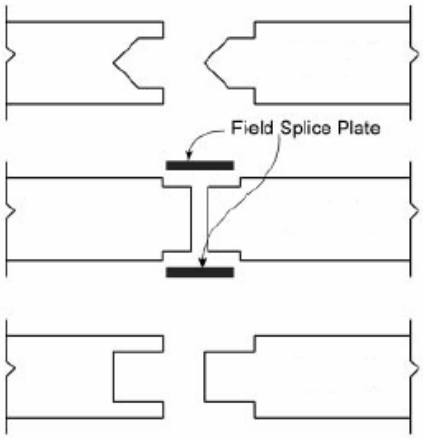

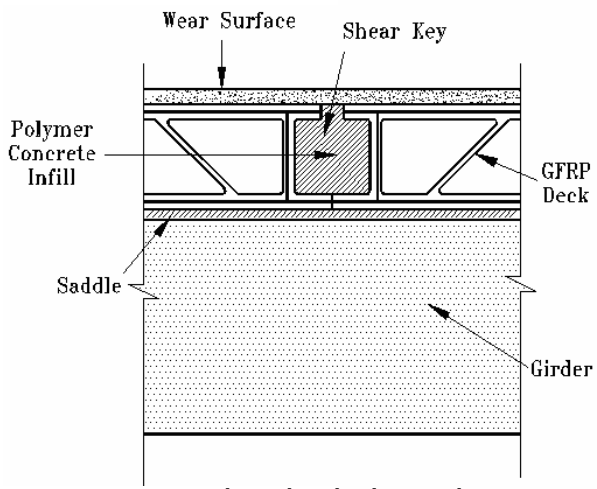

Mechanical shear key

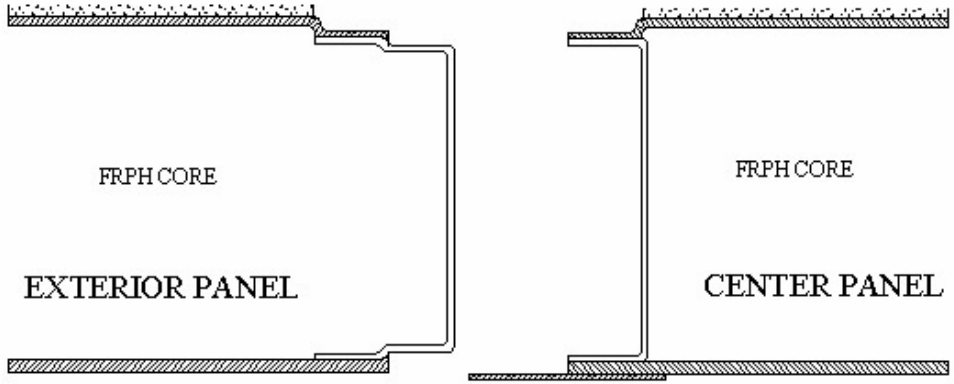

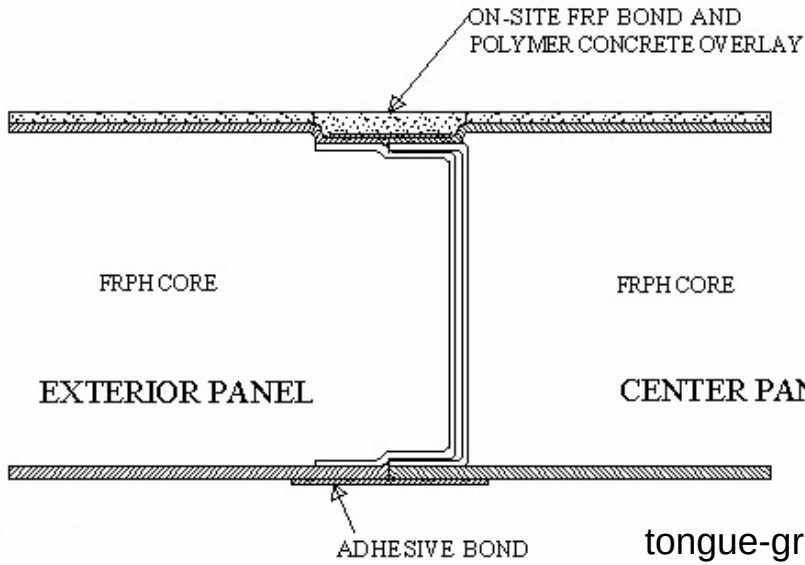

tongue-groove

© Copyright, 2006, Zhou & Lesko, Virginia Tech

System Level Connections

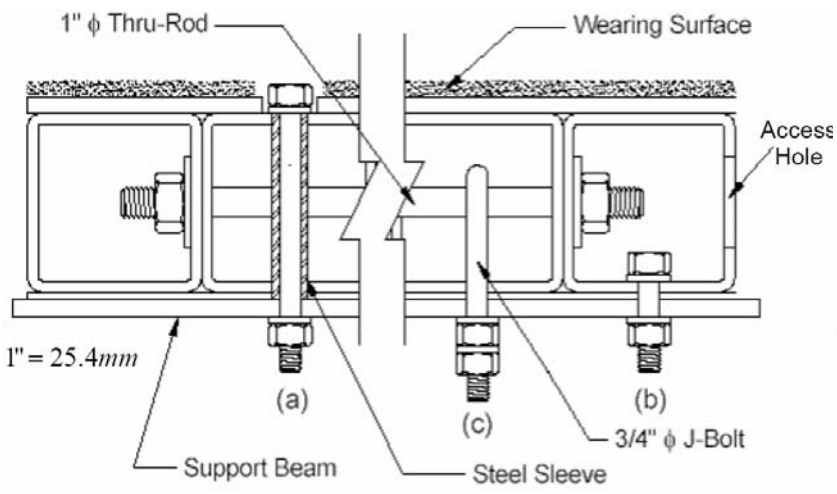

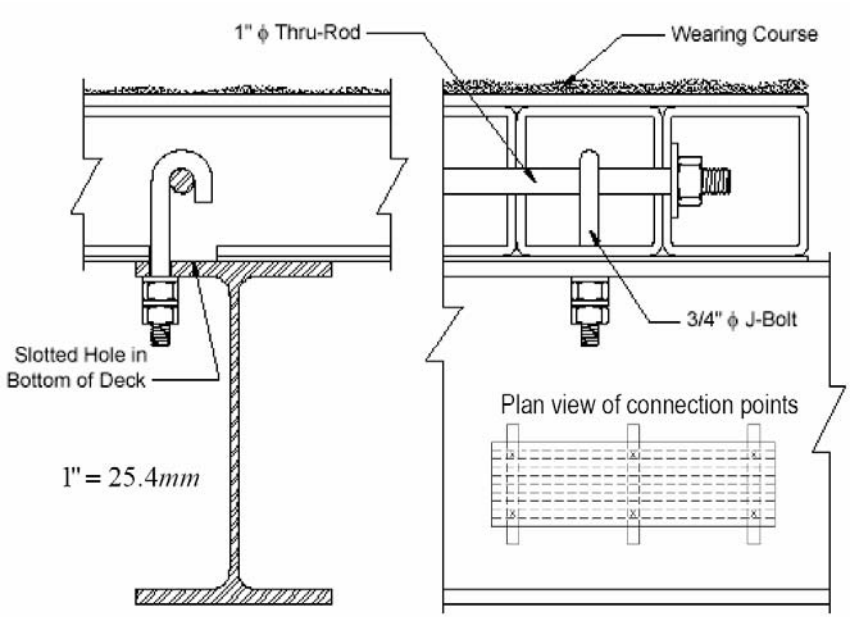

Zhou et al., 2005

Deck-girder composite action not required

© Copyright, 2006, Zhou & Lesko, Virginia Tech

System Level Connections

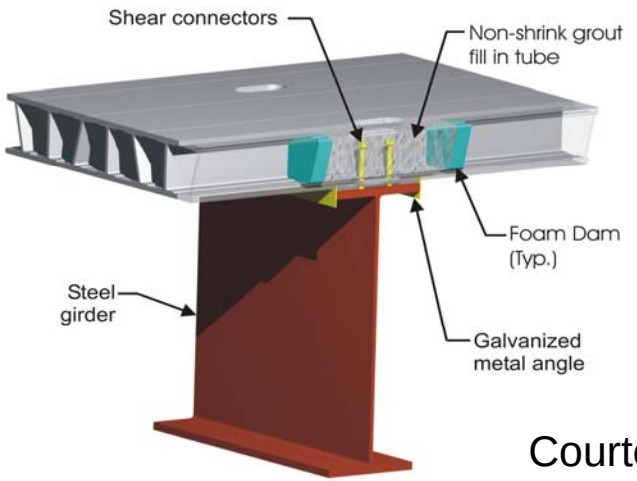

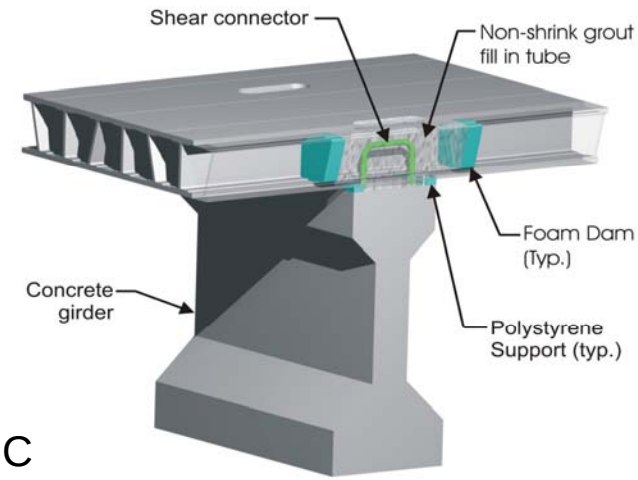

Courtesy of MMC

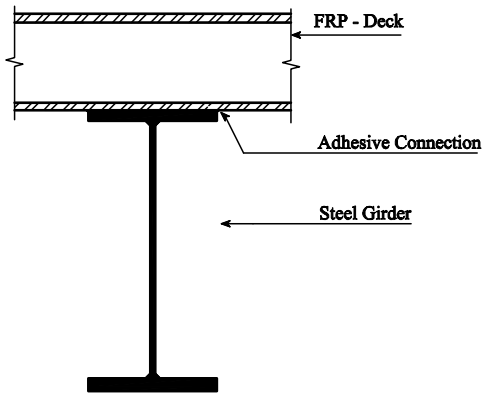

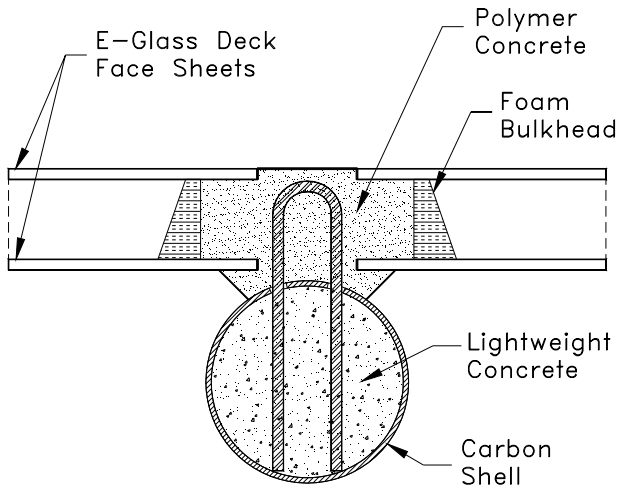

Deck-girder composite action required.

© Copyright, 2006, Zhou & Lesko, Virginia Tech

Field Performance - I

Zhou, 2002

© Copyright, 2006, Zhou & Lesko, Virginia Tech

Field Performance - II

(a) South edge cracking of the surface overlay

(b) North edge cracking of the surface overlay

Zhou, 2002

© Copyright, 2006, Zhou & Lesko, Virginia Tech

Field Performance - III

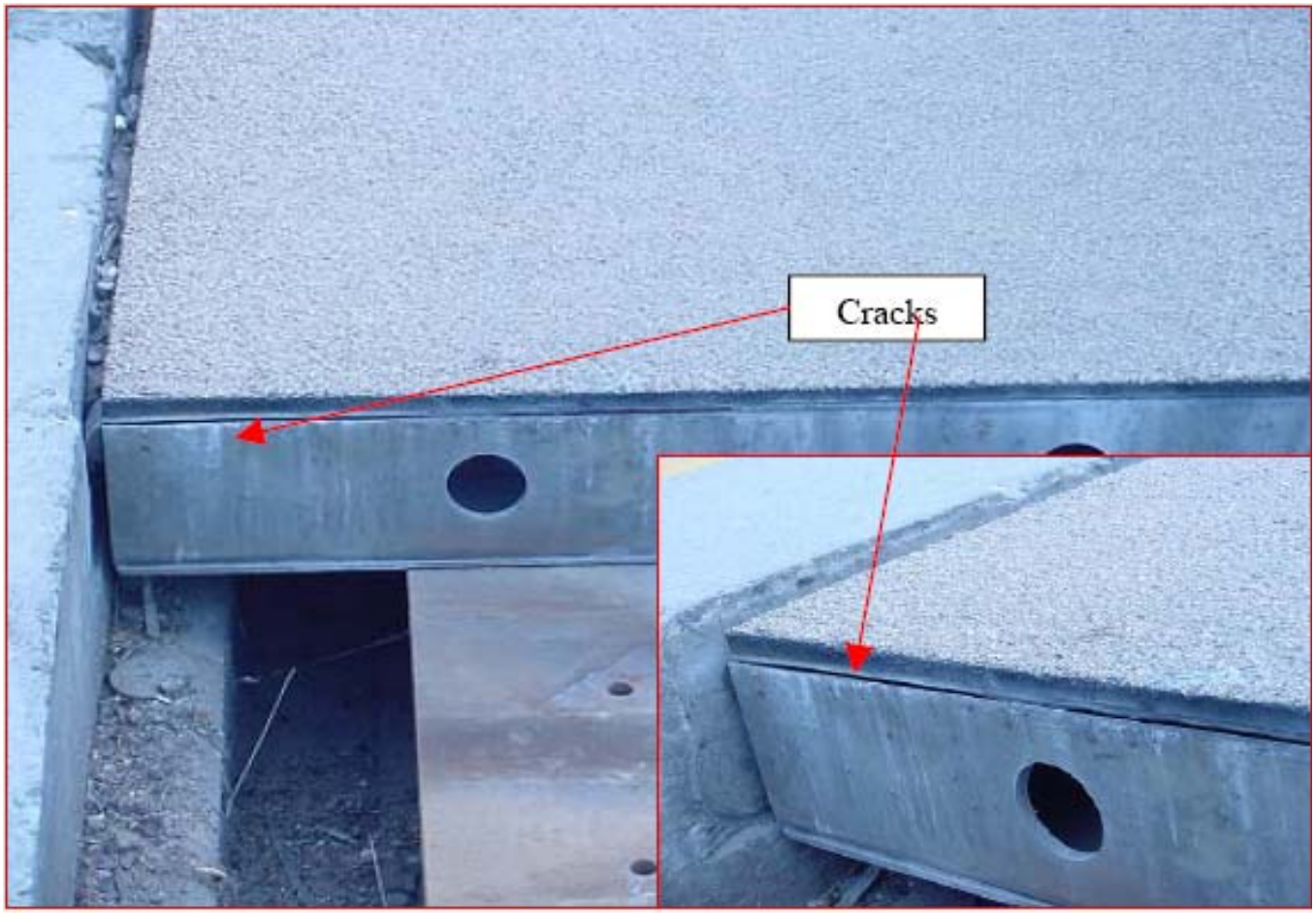

Zhou, 2002

© Copyright, 2006, Zhou & Lesko, Virginia Tech

FRP Panels in Fire - I

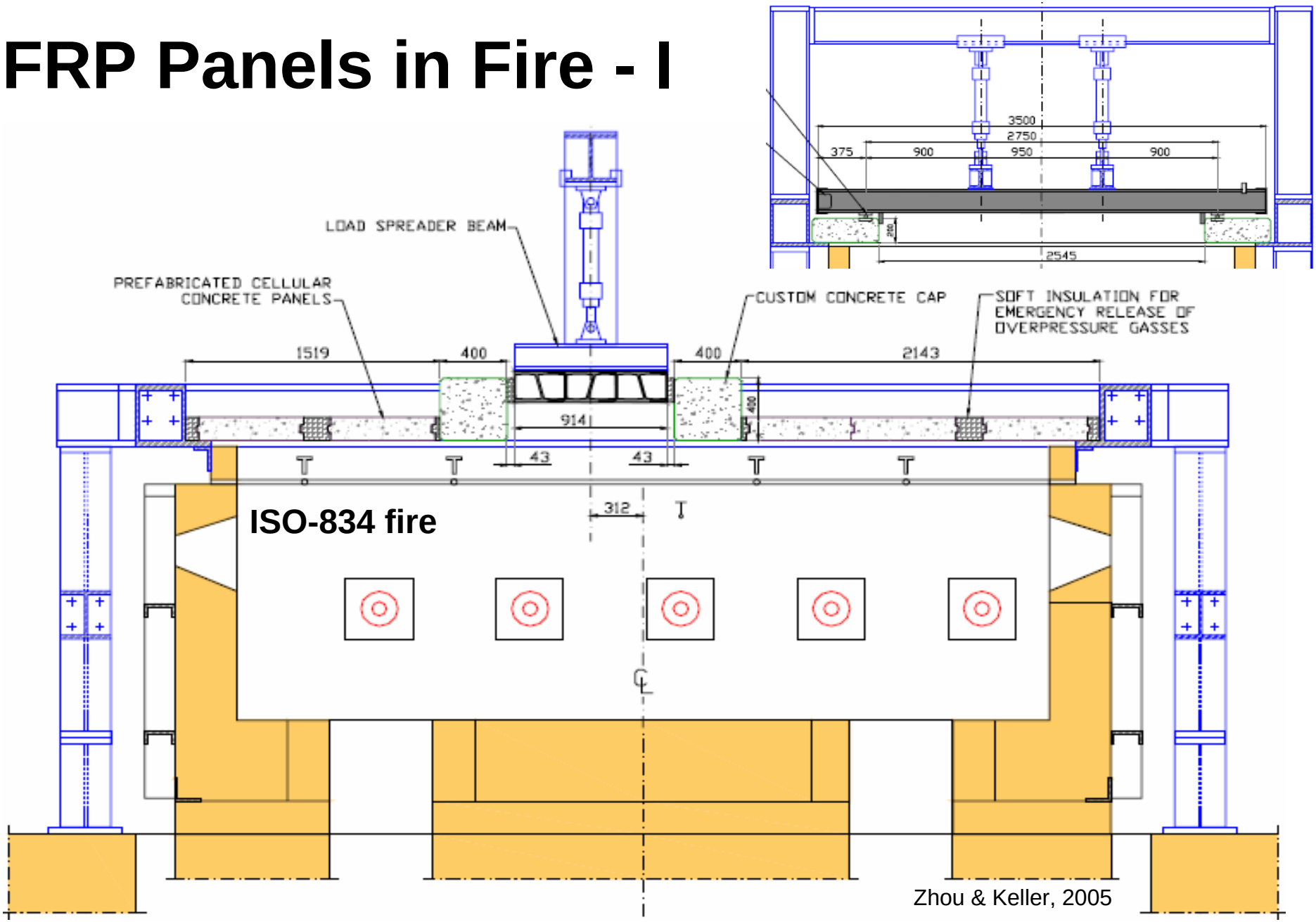

Zhou & Keller, 2005

© Copyright, 2006, Zhou & Lesko, Virginia Tech

FRP Panels in Fire - II

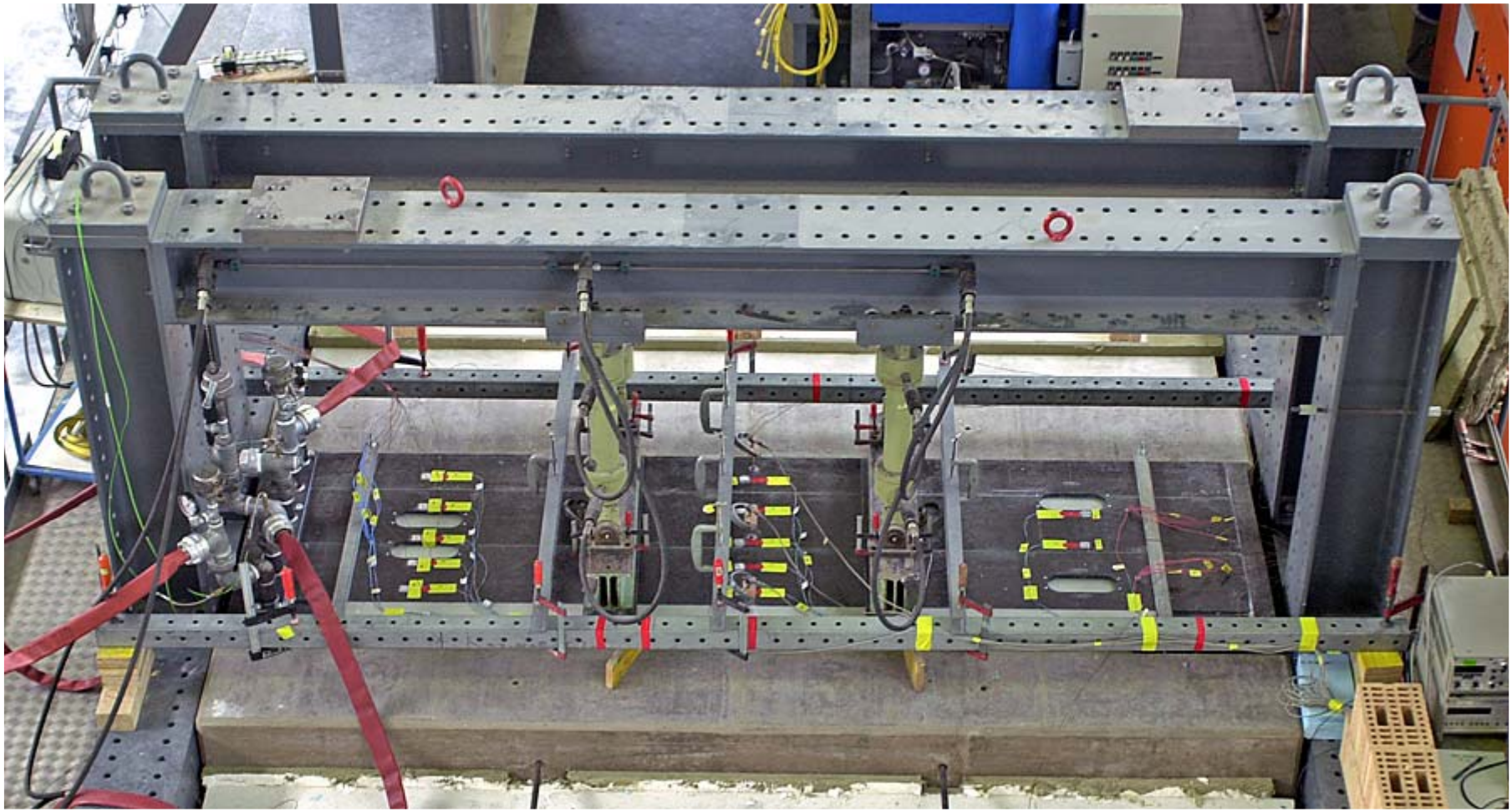

Zhou & Keller, 2005

© Copyright, 2006, Zhou & Lesko, Virginia Tech

FRP Panels in Fire - III

ISO-834 fire and SLS 4-point bending:

SLC01 (water cooled): 2.00 m^3/hr (2.5 cm/s), leaking at 92 min

SLC02 (water cooled) : 1.00 m^3/hr (1.25 cm/s), stopped at 120 min

SLC03 (Air cooled), structural failure occurred at 57 min

Zhou & Keller, 2005

© Copyright, 2006, Zhou & Lesko, Virginia Tech

FRP Panels in Fire - IV

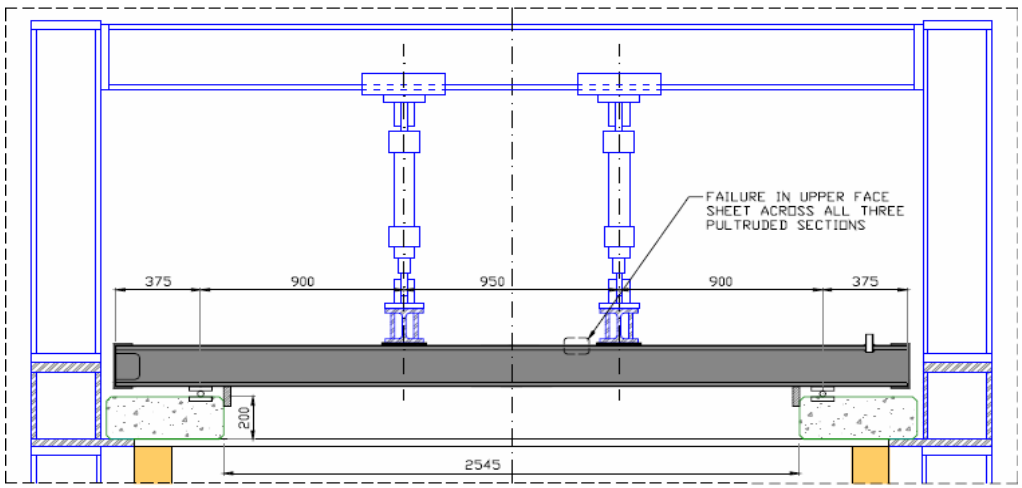

Zhou & Keller, 2005

© Copyright, 2006, Zhou & Lesko, Virginia Tech

Summary

- Pultruded FRP deck systems are most promising, improvements and other innovative deck systems can improve performance and reduce initial material & manufacturing costs
- Equivalent beam and plates analyses are available for initial design
- Design can be verified by detailed 3D FEA and full-scale lab testing
- Connections should be design & constructed with care
- Fatigue and long-term durability could be a concern, good design & construction is the key
- Structural health monitoring system/procedures can be implemented

© Copyright, 2006, Zhou & Lesko, Virginia Tech

Questions

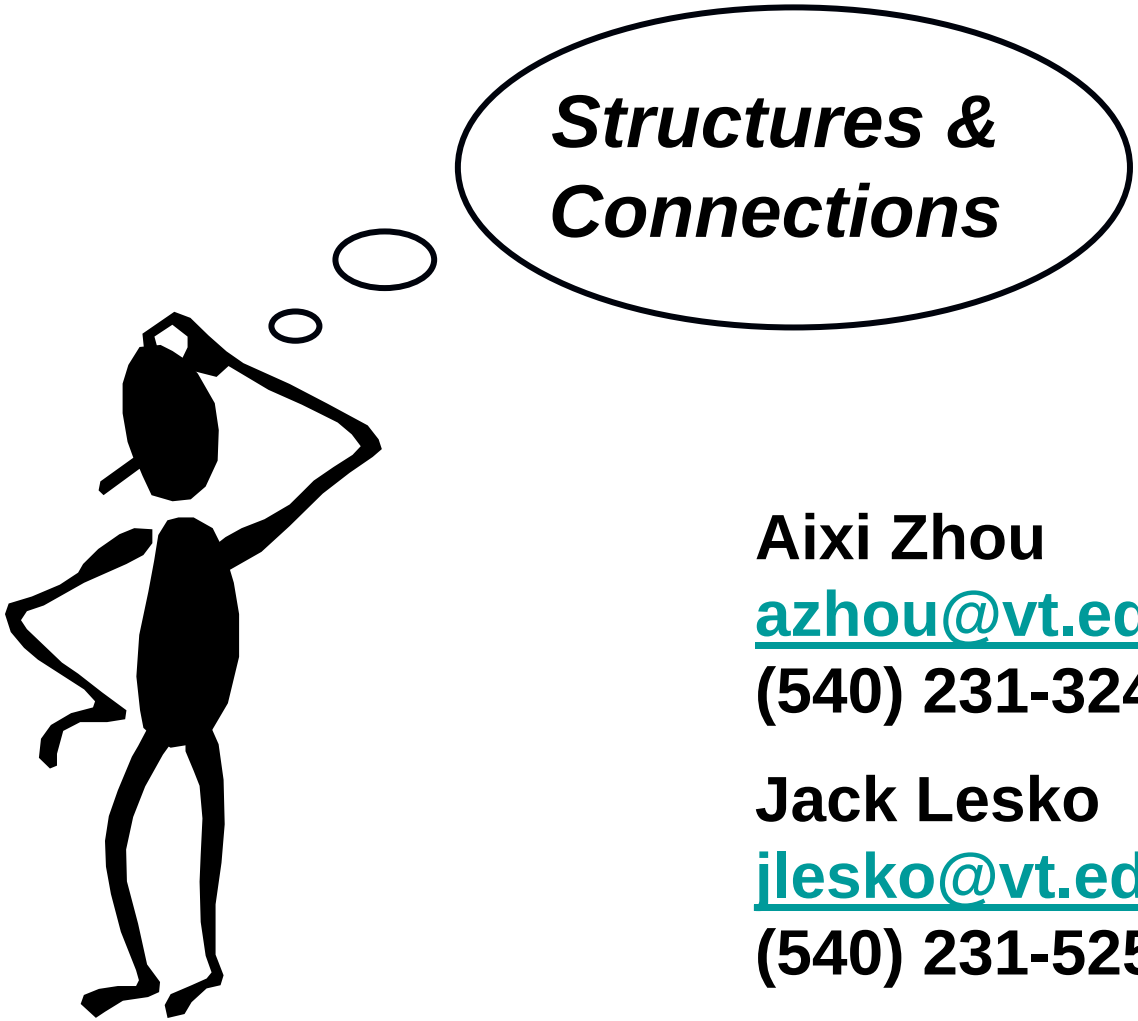

Aixi Zhou
azhou@vt.edu
(540) 231-3249

Jack Lesko
jlesko@vt.edu
(540) 231-5259

© Copyright, 2006, Zhou & Lesko, Virginia Tech