EXAMPLE 1:

THREE-SPAN CONTINUOUS STRAIGHT COMPOSITE I GIRDER

Load and Resistance Factor Design (Third Edition -- Customary U.S. Units)

by
Michael A. Grubb, P.E.
Bridge Software Development International, Ltd.
Cranberry Township, PA

and
Robert E. Schmidt, E.I.T.
SITE-Blauvelt Engineers
Pittsburgh, PA

B S D I

SITE BLAUVELT ENGINEERS a TRC company

DESIGN PARAMETERS

- SPECIFICATIONS: LRFD Third Edition (2004)
- STRUCTURAL STEEL:
  - ASTM A 709 Grade HPS 70W
    for flanges in negative-flexure regions
  - ASTM A 709 Grade 50W
    for all other girder and cross-frame steel
- CONCRETE: f'_c = 4.0 ksi
- REINFORCING STEEL: F_y = 60 ksi
- ADTT: 2,000 trucks per day

B S D I

SITE BLAUVELT ENGINEERS a TRC company

BRIDGE CROSS-SECTION

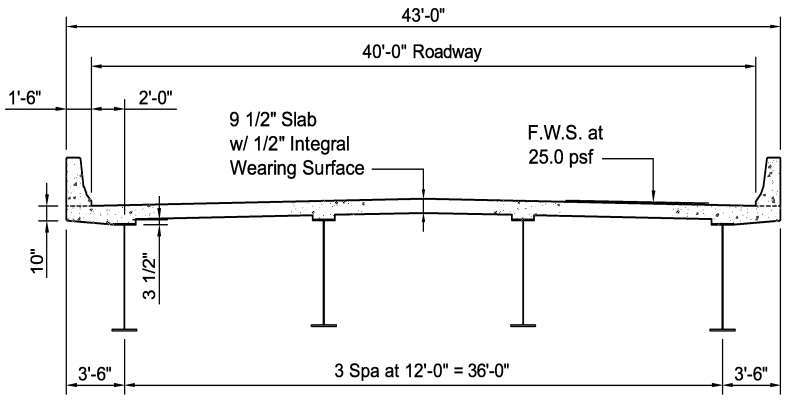

BSDI

SITE BLAUVELT ENGINEERS a TRC company

CROSS-FRAMES
(Article 6.7.4.1)

- **"The need for diaphragms or cross-frames shall be investigated for all stages of assumed construction procedures and the final condition. The investigation should include, but not be limited to the following:**
  - **Transfer of lateral wind loads from the bottom of the girder to the deck & from the deck to the bearings,**
  - **Stability of the bottom flange for all loads when it is in compression,**
  - **Stability of the top flange in compression prior to curing of the deck,**
  - **Consideration of any flange lateral bending effects, and**
  - **Distribution of vertical dead & live loads applied to the structure."**

BSDI

SITE BLAUVELT ENGINEERS a TRC company

BRIDGE FRAMING PLAN

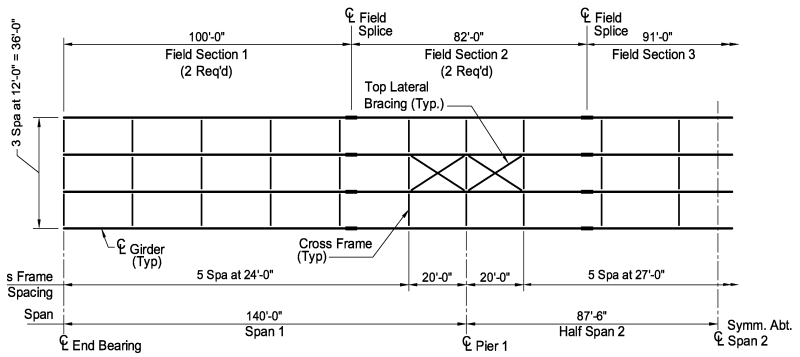

BSDI

SITE BLAUVELT ENGINEERS a TRC company

CROSS-SECTION PROPORTIONS

- **Web Depth**

Span-to-Depth Ratios (Table 2.5.2.6.3-1)

0.032L = 0.032(175.0) = 5.6 ft = 67.2 in.

Use 69.0 in.

- **Web Thickness (Article 6.10.2.1.1)**

$$(t_w)_{min.} = \frac{D}{150} = \frac{69}{150} = 0.46 \text{ in.}$$

BSDI

SITE BLAUVELT ENGINEERS a TRC company

CROSS-SECTION PROPORTIONS (continued)

- **Flange Width (Article 6.10.2.2)**

$$(b_f)_{min.} = D/6 = 69.0/6 = 11.5 \text{ in.}$$

$$(b_{fc})_{min.} = \frac{L}{85} = \frac{100(12)}{85} = 14.1 \text{ in.}$$

- **Flange Thickness (Article 6.10.2.2)**

$$(t_f)_{min} = 1.1 t_w = 1.1(0.5625) = 0.62 \text{ in.}$$

BSDI

SITE BLAUVELT ENGINEERS a TRC company

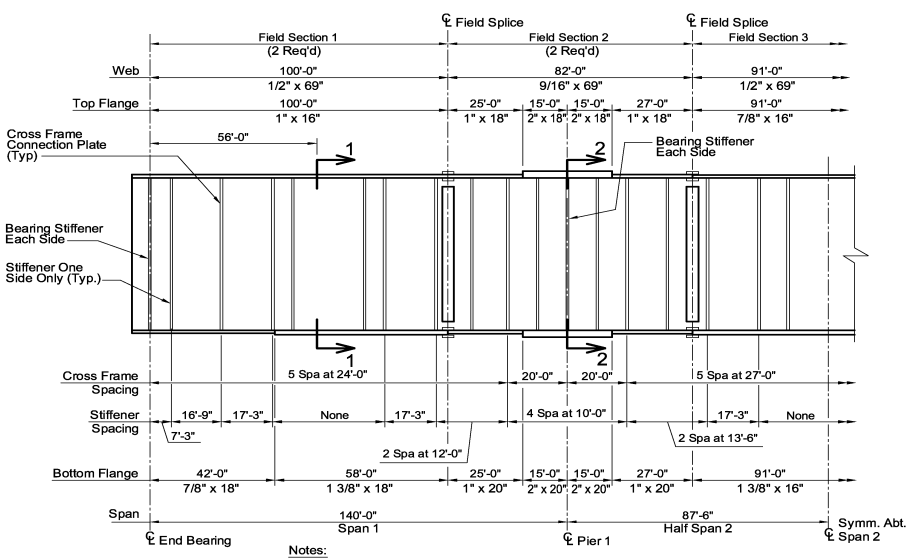

Notes:

1. Total estimated weight of structural steel = 28.9 lbs / sq ft of deck area.
2. Top and bottom flanges in Field Section 2 and 4 are ASTM A 709 Grade HPS 70W steel (all other steel is ASTM A 709 Grade 50W).

BSDI

SITE BLAUVELT ENGINEERS a TRC company

CROSS-SECTION PROPORTIONS (continued)

- **Flange Width-to-Thickness (Article 6.10.2.2)**

$$\frac{b_f}{2t_f} = \frac{18}{2(0.875)} = 10.3 < 12.0 \quad \text{ok}$$

- **Flange Moments of Inertia (Article 6.10.2.2)**

$$\frac{I_{yc}}{I_{yt}} = \frac{\frac{1(16)^3}{12}}{\frac{1.375(18)^3}{12}} = 0.51 \qquad 0.1 < 0.51 < 10 \quad \text{ok}$$

BSDI

SITE BLAUVELT ENGINEERS a TRC company

DEAD LOADS (Article 3.5.1)

- **Component Dead Load (DC_1)**

  DC_1 = component dead load acting on the noncomposite section

- Concrete deck = 5.106 k/ft (incl. integral w.s.)
- Overhang tapers = 0.142 k/ft
- Deck haunches = 0.183 k/ft
- SIP forms = 0.480 k/ft
- Cross-frames & details = 0.120 k/ft

  TOTAL = 6.031 k/ft ¸ 4 girders = *1.508 k/ft + girder weight*

BSDI

SITE BLAUVELT ENGINEERS a TRC company

DEAD LOADS
(continued)

- **Component Dead Load (DC_2)**

  DC_2 = component dead load acting on the composite section

  - **Barriers = 0.520/2 = *0.260 k/ft***

    Note: Distributed equally to exterior girder & adjacent interior girder

- **Wearing Surface Load (DW)**

  - **Wearing surface = [0.025 x 40.0]/4 girders = *0.250 k/ft***

    Note: Distributed equally to each girder

B S D I

SITE BLAUVELT ENGINEERS a TRC company

Basic LRFD Design Live Load
HL-93 - (Article 3.6.1.2.1)

- **Design Truck:** Þ

  or

- **Design Tandem:**

  Pair of 25.0 KIP axles spaced 4.0 FT apart

  superimposed on

- **Design Lane Load**

  0.64 KLF uniformly distributed load

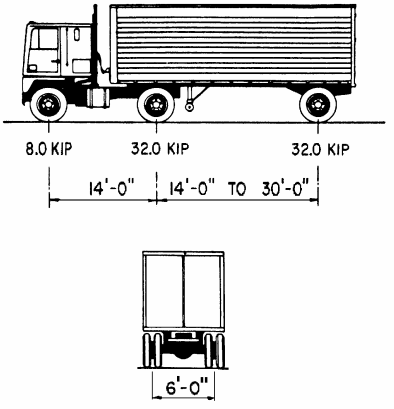

B S D I

SITE BLAUVELT ENGINEERS a TRC company

LRFD Negative Moment Loading
(Article 3.6.1.3.1)

- For negative moment between points of permanent-load contraflexure & interior-pier reactions, check an additional load case:
  - Add a second design truck to the design lane load, with a *minimum* headway between the front and rear axles of the two trucks equal to 50 feet.
  - Fix the rear-axle spacing of both design trucks at 14 feet, and
  - Reduce all loads by 10 percent.

B S D I

SITE BLAUVELT ENGINEERS a TRC company

LRFD Fatigue Load
(Article 3.6.1.4.1)

- Design Truck only =>
  - w/ fixed 30-ft rear-axle spacing
  - placed in a single lane

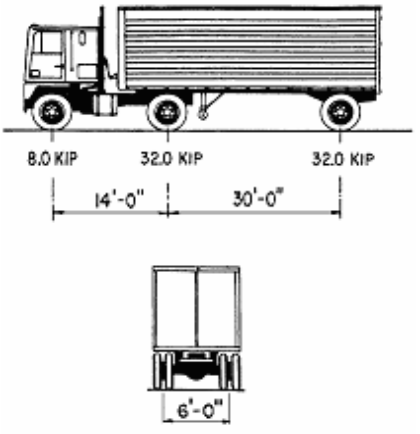

B S D I

SITE BLAUVELT ENGINEERS a TRC company

LOAD for OPTIONAL LIVE-LOAD DEFLECTION EVALUATION

Refer to Article 3.6.1.3.2:

- **Deflection is taken as the larger of:**
  - **That resulting from the design truck by itself.**
  - **That resulting from 25% of the design truck together with the design lane load.**

B S D I

SITE BLAUVELT ENGINEERS a TRC company

WIND LOADS (Article 3.8)

$$P_D = P_B \left(\frac{V_{DZ}}{V_B}\right)^2 = P_B \frac{V_{DZ}^2}{10{,}000} \qquad \text{Eq. (3.8.1.2.1-1)}$$

P_B = base wind pressure = 0.050 ksf for beams

V_{DZ} = design wind velocity at elevation Z

V_B = base wind velocity at 30 ft height = 100 mph

For this example, assume the bridge is 35 ft above low ground & located in open country.

B S D I

SITE BLAUVELT ENGINEERS a TRC company

WIND LOADS
(continued)

$$V_{DZ} = 2.5 V_o \left(\frac{V_{30}}{V_B}\right) \ln\left(\frac{Z}{Z_o}\right) \qquad \text{Eq. (3.8.1.1-1)}$$

V_o = friction velocity = 8.2 mph for open country

V_{30} = wind velocity at 30 ft above low ground = V_B = 100 mph in absence of better information

Z = height of structure above low ground (> 30 ft)

Z_o = friction length of upstream fetch = 0.23 ft for open country

BSDI

SITE BLAUVELT ENGINEERS a TRC company

WIND LOADS
(continued)

$$V_{DZ} = 2.5(8.20)\left(\frac{100}{100}\right) \ln\left(\frac{35}{0.23}\right) = 103.0 \text{ mph}$$

$$P_D = 0.050\left[\frac{(103.0)^2}{10{,}000}\right] = \textit{0.053 ksf}$$

$$w = P_D h_{exp.} = 0.053(10.41) = 0.55 \text{ kips/ft} > 0.3 \text{ kips/ft}$$

ok

BSDI

SITE BLAUVELT ENGINEERS a TRC company

Basic LRFD Design Equation

$$\Sigma \eta_i \gamma_i Q_i \leq \phi R_n = R_r \quad \text{Eq. (1.3.2.1-1)}$$

where:

$\eta_i = \eta_D \eta_R \eta_I$

- $\eta_i \geq 0.95$ for maximum γ's
- $\eta_i = \frac{1}{\eta_D \eta_R \eta_I} \geq 0.95$ for minimum γ's

γ_i = Load factor

ϕ = Resistance factor

Q_i = Nominal force effect

R_n = Nominal resistance

R_r = Factored resistance = ϕR_n

BSDI

SITE BLAUVELT ENGINEERS a TRC company

Load Combinations and Load Factors

Load Combination / Limit State	DC DD DW EH EV ES	LL IM CE BR PL LS	WA	WS	WL	FR	TU CR SH	TG	SE	Use One of These at a Time			
										EQ	IC	CT	CV
STRENGTH-I	γ_p	1.75	1.00	-	-	1.00	0.50/1.20	γ_{TG}	γ_{SE}	-	-	-	-
STRENGTH-II	γ_p	1.35	1.00	-	-	1.00	0.50/1.20	γ_{TG}	γ_{SE}	-	-	-	-
STRENGTH-III	γ_p	-	1.00	1.40	-	1.00	0.50/1.20	γ_{TG}	γ_{SE}	-	-	-	-
STRENGTH-IV EH, EV, ES, DW DC ONLY	γ_p 1.5	-	1.00	-	-	1.00	0.50/1.20	-	-	-	-	-	-
STRENGTH-V	γ_p	1.35	1.00	0.40	0.40	1.00	0.50/1.20	γ_{TG}	γ_{SE}	-	-	-	-
EXTREME-I	γ_p	γ_{EQ}	1.00	-	-	1.00	-	-	-	1.00	-	-	-
EXTREME-II	γ_p	0.50	1.00	-	-	1.00	-	-	-	-	1.00	1.00	1.00
SERVICE-I	1.00	1.00	1.00	0.30	0.30	1.00	1.00/1.20	γ_{TG}	γ_{SE}	-	-	-	-
SERVICE-II	1.00	1.30	1.00	-	-	1.00	1.00/1.20	-	-	-	-	-	-
SERVICE-III	1.00	0.80	1.00	-	-	1.00	1.00/1.20	γ_{TG}	γ_{SE}	-	-	-	-
FATIGUE-LL, IM & CE ONLY	-	0.75	-	-	-	-	-	-	-	-	-	-	-

Load Factors for Permanent Loads, ?$_p$

Type of Load	Load Factor Maximum	Load Factor Minimum
DC: Component and Attachments	1.25	0.90
DD: Downdrag	1.80	0.45
DW: Wearing Surfaces and Utilities	1.50	0.65
EH: Horizontal Earth Pressure		
• Active	1.50	0.90
• At-Rest	1.35	0.90
EV: Vertical Earth Pressure		
• Overall Stability	1.35	N/A
• Retaining	1.35	1.00
Structure	1.30	0.90
• Rigid Buried		
Structure	1.35	0.90
• Rigid Frames	1.95	0.90

B S D I

SITE BLAUVELT ENGINEERS a TRC company

LRFD LOAD COMBINATIONS (continued)

- **Construction Loads (Article 3.4.2):**

STRENGTH I

- **Construction loads -> Load factor = 1.5**
- **DW -> Load factor = 1.25**

STRENGTH III

- **Construction dead loads -> Load factor = 1.25**
- **Wind loads -> Load factor = 1.25**
- **DW -> Load factor = 1.25**

STRENGTH V

- **Construction dead loads -> Load factor = 1.25**
- **DW -> Load factor = 1.25**

B S D I

SITE BLAUVELT ENGINEERS a TRC company

STRUCTURAL ANALYSIS

- **Summary -- Live-Load Distribution Factors:**

Strength Limit State

	Interior Girder	Exterior Girder
Bending Moment	0.807 lanes	0.950 lanes
Shear	1.082 lanes	0.950 lanes

Fatigue Limit State

	Interior Girder	Exterior Girder
Bending Moment	0.440 lanes	0.750 lanes
Shear	0.700 lanes	0.750 lanes

BSDI

SITE BLAUVELT ENGINEERS a TRC company

STRUCTURAL ANALYSIS (continued)

- **Distribution Factor for Live-Load Deflection:**

$$DF = m_3 \left(\frac{N_L}{N_b} \right)$$

$$= 0.85 \left(\frac{3}{4} \right) = 0.638 \text{ lanes}$$

BSDI

SITE BLAUVELT ENGINEERS a TRC company

STRUCTURAL ANALYSIS (continued)

- **Dynamic Load Allowance – Impact (IM)**

COMPONENT	IM
Deck Joints – All Limit States	75%
All Other Components	
- Fatigue & Fracture Limit State	15%
- All Other Limit States	33%
(applied to design truck only...***not*** to design lane load)	

BSDI

SITE BLAUVELT ENGINEERS a TRC company

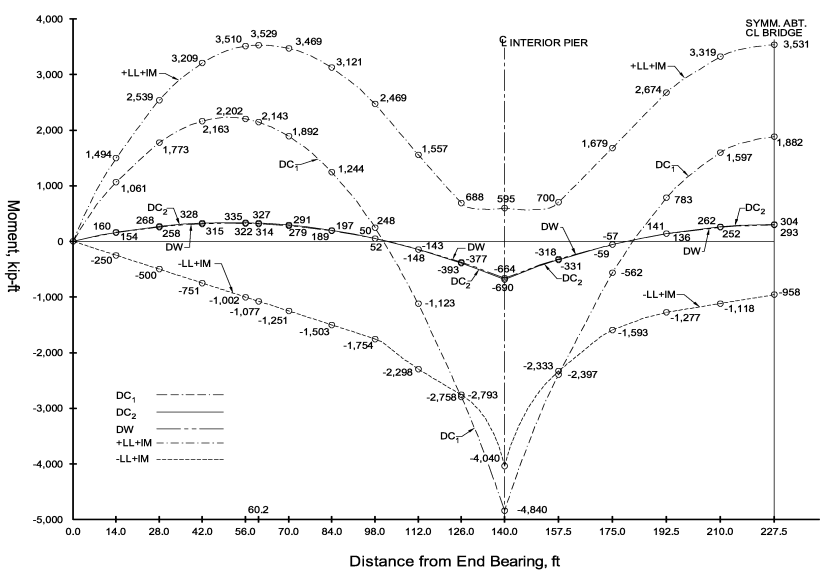

BSDI

SITE BLAUVELT ENGINEERS a TRC company

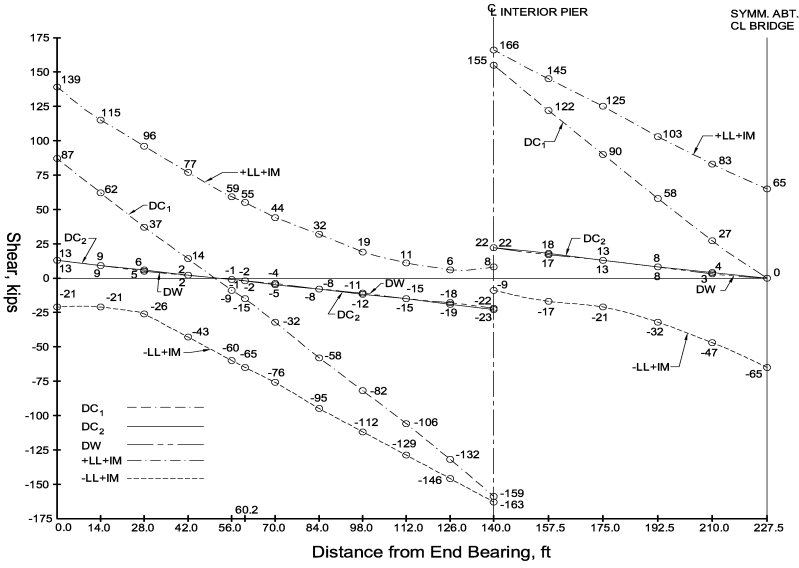

Note: LL+IM shears are controlled by the interior girder.

B S D I

SITE BLAUVELT ENGINEERS a TRC company

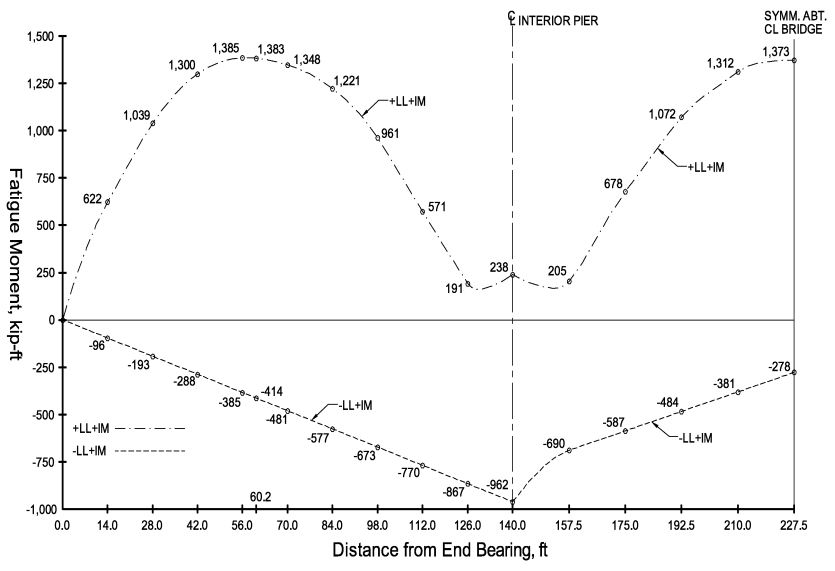

B S D I

SITE BLAUVELT ENGINEERS a TRC company

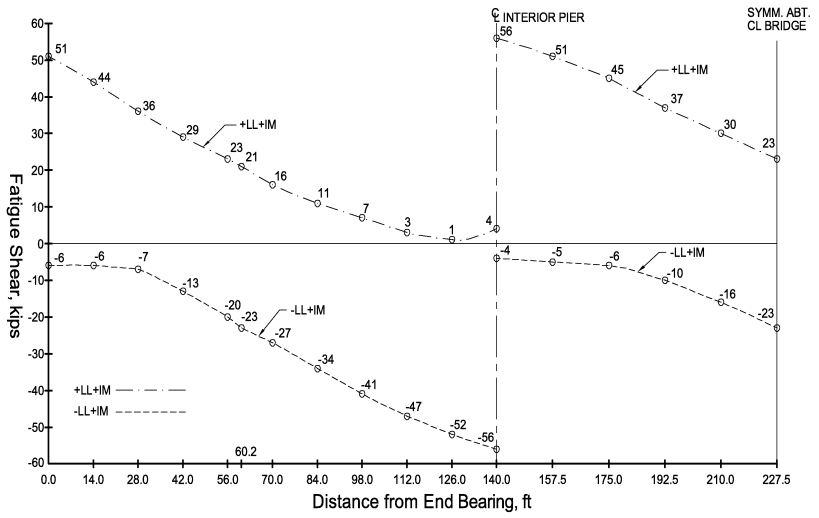

B S D I

SITE BLAUVELT ENGINEERS a TRC company

STRUCTURAL ANALYSIS (continued)

Live Load Deflection

- **Design Truck + IM (SERVICE I):**

  (D_{LL+IM}) end span = 0.91 in. (governs)
  (D_{LL+IM}) center span = 1.23 in. (governs)

- **100% Design Lane + 25% Design Truck + IM (SERVICE I):**

  (D_{LL+IM}) end span = 0.60 + 0.25(0.91) = 0.83 in.
  (D_{LL+IM}) center span = 0.85 + 0.25(1.23) = 1.16 in.

B S D I

SITE BLAUVELT ENGINEERS a TRC company

LRFD LIMIT STATES

- The LRFD Specifications require examination of the following limit states:
  - SERVICE LIMIT STATE
  - FATIGUE & FRACTURE LIMIT STATE
  - STRENGTH LIMIT STATE
    - (CONSTRUCTIBILITY)
  - EXTREME EVENT LIMIT STATE

BSDI

SITE BLAUVELT ENGINEERS a TRC company

SECTION PROPERTIES
Section 1-1 (@ $0.4L_1$)

- Effective Flange Width (Article 4.6.2.6):

Interior Girder

$$\frac{L}{4} = \frac{100.0 \text{ x } 12}{4} = 300.0 \text{ in.}$$

or

$$12.0t_s + \frac{b_{tf}}{2} = 12.0(9.0) + \frac{16.0}{2} = 116.0 \text{ in. (governs)}$$

or

$$\text{average spacing of girders} = 144.0 \text{ in.}$$

BSDI

SITE BLAUVELT ENGINEERS a TRC company

SECTION PROPERTIES (continued)
Section 1-1 (@ $0.4L_1$)

- **Effective Flange Width (Article 4.6.2.6):**

Exterior Girder

$$\frac{116.0}{2} + \frac{L}{8} = 58.0 + \frac{100.0 \times 12}{8} = 208.0 \text{ in.}$$

or

$$\frac{116.0}{2} + 6.0t_s + \frac{b_{tf}}{4} = 58.0 + 6.0(9.0) + \frac{16.0}{4} = 116.0 \text{ in.}$$

or

$$\frac{116.0}{2} + \text{width of the overhang} = 58.0 + 42.0 \text{ in.} = 100.0 \text{ in. (governs)}$$

BSDI

SITE BLAUVELT ENGINEERS a TRC company

SECTION PROPERTIES (continued)
Section 1-1 (@ $0.4L_1$)

- **Plastic Moment (Article D6.1 -- Appendix D):**

$$P_t + P_w + P_c = A_{steel}F_y = 75.25(50) = 3{,}763 \text{ kips}$$

$$P_s = 0.85f'_c\, b_{eff}\, t_s = 0.85(4.0)(100.0)(9.0) = 3{,}060 \text{ kips}$$

3,060 kips < 3,763 kips \ PNA is in the top flange, use Case II

$$\bar{y} = \frac{t_c}{2}\left[\frac{P_w + P_t - P_s}{P_c} + 1\right]$$

$$= 0.44 \text{ in. from the top of the top flange}$$

$$M_p = \frac{P_c}{2t_c}\left[\bar{y}^2 + (t_c - \bar{y})^2\right] + \left[P_s d_s + P_w d_w + P_t d_t\right]$$

$$M_p = 170{,}382 \text{ kip-in.} = 14{,}199 \text{ kip-ft}$$

BSDI

SITE BLAUVELT ENGINEERS a TRC company

SECTION PROPERTIES (continued)
Section 1-1 (@ $0.4L_1$)

- **Yield Moment (Article D6.2.2 -- Appendix D):**

$$F_y = \frac{M_{D1}}{S_{NC}} + \frac{M_{D2}}{S_{LT}} + \frac{M_{AD}}{S_{ST}}$$

$$50 = 1.0\left[\frac{1.25(2{,}202)(12)}{1{,}973} + \frac{1.25(335)(12) + 1.50(322)(12)}{2{,}483} + \frac{M_{AD}}{2{,}706}\right]$$

$$M_{AD} = 78{,}206 \text{ kip-in.} = 6{,}517 \text{ kip-ft}$$

$$M_y = M_{D1} + M_{D2} + M_{AD}$$

$$M_y = 1.0[1.25(2{,}202) + 1.25(335) + 1.50(322) + 6{,}517]$$

$$M_y = 10{,}171 \text{ kip-ft} \quad (M_p / M_y = 1.4)$$

BSDI

SITE BLAUVELT ENGINEERS a TRC company

SECTION PROPERTIES (continued)
Section 2-2 (@ Interior Pier)

- **Effective Flange Width (Art. 4.6.2.6):**

Exterior Girder = 100.5 in.

- **Min. Concrete Deck Reinforcement (Article 6.10.1.7):**

$$A_{deck} = \frac{9.0}{12}(43.0) + 2\left[\frac{1}{12}\left(3.0 + 0.5\left(3.5 - \frac{18/2}{12}\right)\right)\right] = 33.17 \text{ ft}^2 = 4{,}776 \text{ in.}^2$$

$$0.01(4{,}776) = 47.76 \text{ in.}^2$$

$$\frac{47.76}{43.0} = 1.11 \text{ in.}^2/\text{ft} = 0.0926 \text{ in.}^2/\text{in.}$$

$$0.0926(100.5) = 9.30 \text{ in.}^2$$ @ 4.63 in. from bot. of the deck

BSDI

SITE BLAUVELT ENGINEERS a TRC company

Constructibility

B S D I

SITE BLAUVELT ENGINEERS a TRC company

DECK-PLACEMENT SEQUENCE

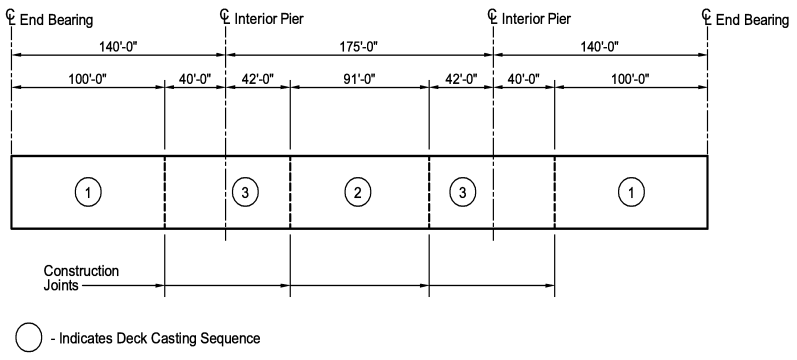

B S D I

SITE BLAUVELT ENGINEERS a TRC company

Table 1: Moments from Deck-Placement Analysis

Span -> 1	Unfactored Dead-Load Moments (kip-ft)								
Length (ft)	12.00	24.00	42.00	48.00	56.00	72.00	84.00	96.00	100.00
Steel Weight	143	250	341	353	**352**	296	206	74	21
SIP Forms (SIP)	63	110	147	151	150	124	84	27	4
Cast									
1	870	1544	2189	2306	2387	2286	1983	1484	1275
2	-168	-336	-589	-673	-786	-1010	-1179	-1347	**-1403**
3	14	28	50	57	67	86	101	115	120
Sum of Casts + SIP	779	1346	1797	1841	1818	1486	989	279	-4
Max. +M	933	1654	2336	2457	**2537**	2410	2067	1511	1279
DC_2 + DW	275	477	643	661	657	551	386	148	52
Deck, haunches + SIP	786	1360	1822	1870	**1850**	1528	1038	335	53

M = 352 + 2,537 = *2,889 kip-ft*

Table 2: Vertical Deflections from Deck-Placement Analysis

Span ->1	Unfactored Vertical Dead-Load Deflections (In.)								
Length (ft)	12.00	24.00	42.00	48.00	56.00	72.00	84.00	96.00	100.00
Steel Weight	-.17	-.32	-.47	-.50	-.51	-.47	-.39	-.29	-.25
SIP Forms (SIP)	-.07	-.14	-.20	-.21	-.21	-.20	-.16	-.12	-.10
Cast									
1	-1.32	-2.50	-3.78	-4.04	-4.27	-4.30	-3.95	-3.33	-3.08
2	.27	.52	.86	.96	1.08	1.25	1.32	1.32	1.31
3	-.01	-.03	-.04	-.04	-.05	-.05	-.05	-.04	-.03
Sum of Casts + SIP	-1.14	-2.14	-3.16	-3.34	**-3.46**	-3.30	-2.84	-2.17	-1.91
DC_2 + DW	-.17	-.32	-.46	-.48	-.49	-.45	-.38	-.28	-.24
Total	-1.48	-2.78	-4.09	-4.32	-4.46	-4.22	-3.61	-2.74	-2.40
Deck, haunches + SIP	-.92	-1.71	-2.47	-2.59	**-2.64**	-2.43	-2.02	-1.47	-1.27

Table 3: Unfactored Vertical Dead-Load Reactions from Deck-Placement Analysis (kips)

	Abut. 1	Pier 1	Pier 2	Abut. 2
Steel Weight	-13.	-53.	-53.	-13.
sum	-13.	-53.	-53.	-13.
SIP Forms (SIP)	-6.	-21.	-21.	-6.
sum	-19.	-74.	-74.	-19.
Cast 1	-80.	-55.	-55.	-80.
sum	-99.	-129.	-129.	-99.
Cast 2	13.	-75.	-75.	14.
sum	-85.	-204.	-204.	-85.
Cast 3	-1.	-110.	-110.	-1.
sum	-86.	-314.	-314.	-86.
Sum of Casts + SIP	-73.	-261.	-261.	-73.
DC_2 + DW	-26.	-90.	-90.	-26.
Total	-112.	-404.	-404.	-112.
Deck, haunches + SIP	-74.	-261.	-261.	-74.

DECK-PLACEMENT ANALYSIS (continued)

- **Calculate f_{bu}: (at Section 1-1 -> 56¢-0² from abut.)**

For STRENGTH I:

Top flange: $f_{bu} = \dfrac{1.0(1.25)(2{,}889)(12)}{1{,}581} = -27.41\,\text{ksi}$

Bot. flange: $f_{bu} = \dfrac{1.0(1.25)(2{,}889)(12)}{1{,}973} = 21.96\,\text{ksi}$

For STRENGTH IV:

Top flange: $f_{bu} = \dfrac{1.0(1.5)(2{,}889)(12)}{1{,}581} = -32.89\,\text{ksi}$

Bot. flange: $f_{bu} = \dfrac{1.0(1.5)(2{,}889)(12)}{1{,}973} = 26.36\,\text{ksi}$

BSDI

SITE BLAUVELT ENGINEERS a TRC company

DECK-OVERHANG LOADS

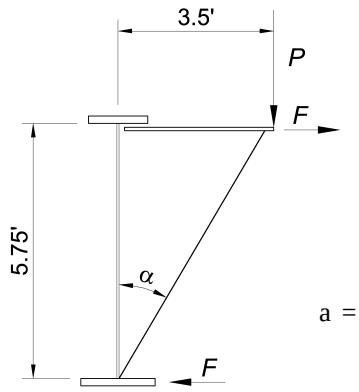

$$F = P \tan \alpha$$

$$\alpha = \tan^{-1}\left(\frac{3.5\ \text{ft}}{5.75\ \text{ft}}\right) = 31.3^\circ$$

B S D I

SITE BLAUVELT ENGINEERS a TRC company

DECK OVERHANG LOADS (continued)

Deck overhang weight: **P = 255 lbs/ft**

<u>Construction loads</u>:

Overhang deck forms:	**P = 40 lbs/ft**
Screed rail:	**P = 85 lbs/ft**
Walkway:	**P = 125 lbs/ft**
Railing:	**P = 25 lbs/ft**
Finishing machine:	**P = 3000 lbs**

B S D I

SITE BLAUVELT ENGINEERS a TRC company

DECK OVERHANG LOADS (continued)

- Determine if amplification of first-order compression-flange f_ℓ is required: $L_b = 24¢\text{-}0^2$

If: $L_b \pounds 1.2L_p\sqrt{\dfrac{C_bR_b}{f_{bm}/F_{yc}}}$ then, no amplification

Otherwise: $f_\ell = \left(\dfrac{0.85}{1 - \dfrac{f_{bm}}{F_{cr}}}\right) f_{\ell 1} \ ^3 \ f_{\ell 1}$ Eq. (6.10.1.6-4)

Or: $f_\ell = (AF) f_{\ell 1} \ ^3 \ f_{\ell 1}$

BSDI

SITE BLAUVELT ENGINEERS a TRC company

DECK OVERHANG LOADS (continued)

$$L_b \pounds 1.2L_p\sqrt{\frac{C_bR_b}{f_{bm}/F_{yc}}}$$ Eq. (6.10.1.6-2)

$R_b = 1.0$

$C_b = 1.0$

$f_{bm} = f_{bu} = -32.89$ ksi (STRENGTH IV)

$$L_p = 1.0r_t\sqrt{\frac{E}{F_{yc}}}$$

Eq. (6.10.8.2.3-4)

where: $$r_t = \frac{b_{fc}}{\sqrt{12\left(1 + \dfrac{1}{3}\dfrac{D_c t_w}{b_{fc} t_{fc}}\right)}}$$

Eq. (6.10.8.2.3-9)

BSDI

SITE BLAUVELT ENGINEERS a TRC company

DECK OVERHANG LOADS (continued)

- For the steel section at Section 1-1, D_c = 38.63 in.

$$r_t = \frac{16}{\sqrt{12\left(1+\frac{1}{3}\frac{38.63(0.5)}{16(1)}\right)}} = 3.90 \text{ in.}$$

$$L_p = \frac{1.0(3.90)}{12}\sqrt{\frac{29{,}000}{50}} = 7.83 \text{ ft}$$

$$1.2(7.83)\sqrt{\frac{1.0(1.0)}{|-32.89|/50}} = 11.59 \text{ ft} < L_b = 24.0 \text{ ft}$$

BSDI

SITE BLAUVELT ENGINEERS a TRC company

DECK OVERHANG LOADS (continued)

- Therefore, amplification of the first-order compression-flange f_ℓ is required:

Calculate F_{cr}:

$$F_{cr} = \frac{C_b R_b \pi^2 E}{\left(\frac{L_b}{r_t}\right)^2}$$

Eq. (6.10.8.2.3-8)

$$F_{cr} = \frac{1.0(1.0)\pi^2(29{,}000)}{\left(\frac{24(12)}{3.90}\right)^2} = 52.49 \text{ ksi}$$

Note:

F_{cr} may exceed $R_b R_h F_{yc}$ in this calculation.

Note: assumes K = 1.0 (see Appendix A of example)

BSDI

SITE BLAUVELT ENGINEERS a TRC company

DECK OVERHANG LOADS (continued)

- **The amplification factor is determined as:**

For STRENGTH I:

$$AF = \frac{0.85}{\left(1 - \frac{|-27.41|}{52.49}\right)} = 1.78 > 1.0 \quad \text{ok}$$

For STRENGTH IV:

$$AF = \frac{0.85}{\left(1 - \frac{|-32.89|}{52.49}\right)} = 2.28 > 1.0 \quad \text{ok}$$

BSDI

SITE BLAUVELT ENGINEERS a TRC company

DECK OVERHANG LOADS (continued)

For STRENGTH I:

Dead loads:

$$P = 1.0[1.25(255) + 1.5(40 + 85 + 25 + 125)] = 731.3 \text{ lbs/ft}$$

$$F = F_\ell = P \tan a = 731.3 \tan(31.3^\circ) = 444.6 \text{ lbs/ft}$$

$$M_\ell = \frac{F_\ell L_b^2}{12} = \frac{0.4446(24)^2}{12} = 21.34 \text{ kip-ft}$$

$$\text{Top flange: } f_\ell = \frac{M_\ell}{S_\ell} = \frac{21.34(12)}{1(16)^2/6} = 6.00 \text{ ksi}$$

$$\text{Bot. flange: } f_\ell = \frac{M_\ell}{S_\ell} = \frac{21.34(12)}{1.375(18)^2/6} = 3.45 \text{ ksi}$$

BSDI

SITE BLAUVELT ENGINEERS a TRC company

DECK OVERHANG LOADS (continued)

For STRENGTH I:

Finishing machine:

$$P = 1.0[1.5(3000)] = 4{,}500 \text{ lbs}$$

$$F = P_\ell = P\tan a = 4{,}500\tan(31.3^\circ) = 2{,}736 \text{ lbs}$$

$$M_\ell = \frac{P_\ell L_b}{8} = \frac{2.736(24)}{8} = 8.21 \text{ kip - ft}$$

$$\text{Top flange: } f_\ell = \frac{M_\ell}{S_\ell} = \frac{8.21(12)}{1(16)^2/6} = 2.31 \text{ ksi}$$

$$\text{Bot. flange: } f_\ell = \frac{M_\ell}{S_\ell} = \frac{8.21(12)}{1.375(18)^2/6} = 1.33 \text{ ksi}$$

B S D I

SITE BLAUVELT ENGINEERS a TRC company

DECK OVERHANG LOADS (continued)

For STRENGTH I:

Top flange: f_ℓ total $= 6.00 + 2.31 = 8.31$ ksi * AF

$= (8.31)(1.78) = 14.79$ ksi $< 0.6F_{yf} = 30$ ksi ok

Bot. flange: f_ℓ total $= 3.45 + 1.33 = 4.78$ ksi * AF

$= (4.78)(1.0) = 4.78$ ksi $< 0.6F_{yf} = 30$ ksi ok

B S D I

SITE BLAUVELT ENGINEERS a TRC company

DECK OVERHANG LOADS (continued)

For STRENGTH IV:

Dead loads:

$$P = 1.0[1.5(255 + 40 + 85 + 25 + 125)] = 795 \text{ lbs / ft}$$

$$F = F_\ell = P \tan a = 795 \tan(31.3^\circ) = 483.4 \text{ lbs / ft}$$

$$M_\ell = \frac{F_\ell L_b^2}{12} = \frac{0.4834(24)^2}{12} = 23.20 \text{ kip - ft}$$

Top flange: $f_\ell = \frac{M_\ell}{S_\ell} = \frac{23.20(12)}{1(16)^2/6} = 6.52 \text{ ksi}$

Bot. flange: $f_\ell = \frac{M_\ell}{S_\ell} = \frac{23.20(12)}{1.375(18)^2/6} = 3.75 \text{ ksi}$

Finishing machine: Not considered

BSDI

SITE BLAUVELT ENGINEERS a TRC company

DECK OVERHANG LOADS (continued)

For STRENGTH IV:

Top flange: f_ℓ total = 6.52 ksi * AF = 6.52(2.28) = 14.87 ksi

14.87 ksi < $0.6F_{yf}$ = 30 ksi ok

Bot. flange: f_ℓ total = 3.75 ksi * AF = 3.75(1.0) = 3.75 ksi

3.75 ksi < $0.6F_{vf}$ = 30 ksi ok

BSDI

SITE BLAUVELT ENGINEERS a TRC company

CONSTRUCTIBILITY - FLEXURE
(Article 6.10.3.2)

- Determine if the section is a slender-web section:

$$\frac{2D_c}{t_w} \leq 5.7\sqrt{\frac{E}{F_{yc}}} \qquad \text{Eq. (6.10.6.2.3-1)}$$

$$\frac{2D_c}{t_w} = \frac{2(38.63)}{0.5} = 154.5$$

$$5.7\sqrt{\frac{E}{F_{yc}}} = 5.7\sqrt{\frac{29{,}000}{50}} = 137.3 < 154.5$$

Therefore, the section is a slender-web section.

Go to Article 6.10.8 to compute F_{nc}.

B S D I

SITE BLAUVELT ENGINEERS a TRC company

CONSTRUCTIBILITY - FLEXURE
(Article 6.10.3.2)

- For discretely braced compression flanges:

$$f_{bu} + f_{\ell} \leq \phi_f R_h F_{yc} \qquad \text{Eq. (6.10.3.2.1-1)}$$

$$f_{bu} + \frac{1}{3} f_{\ell} \leq \phi_f F_{nc} \qquad \text{Eq. (6.10.3.2.1-2)}$$

$$f_{bu} \leq \phi_f F_{crw} \qquad \text{Eq. (6.10.3.2.1-3)}$$

- For discretely braced tension flanges:

$$f_{bu} + f_{\ell} \leq \phi_f R_h F_{yt} \qquad \text{Eq. (6.10.3.2.2-1)}$$

B S D I

SITE BLAUVELT ENGINEERS a TRC company

LOCAL BUCKLING RESISTANCE
Top Flange (Article 6.10.8.2.2)

- **Determine the slenderness ratio of the top flange:**

$$\lambda_f = \frac{b_{fc}}{2t_{fc}} = \frac{16}{2(1)} = 8.0$$

$$\lambda_{pf} = 0.38\sqrt{\frac{E}{F_{yc}}} = 0.38\sqrt{\frac{29{,}000}{50}} = 9.2$$

Since $\lambda_f < \lambda_{pf}$: $F_{nc} = R_b R_h F_{yc}$ **Eq. (6.10.8.2.2-1)**

$$F_{nc_{FLB}} = 1.0(1.0)(50) = 50.0 \text{ ksi}$$

BSDI

SITE BLAUVELT ENGINEERS a TRC company

6.10.8 Flexural Resistance - Composite Sections in Negative Flexure & Noncomposite Sections

Basic Form of All FLB & LTB Eqs

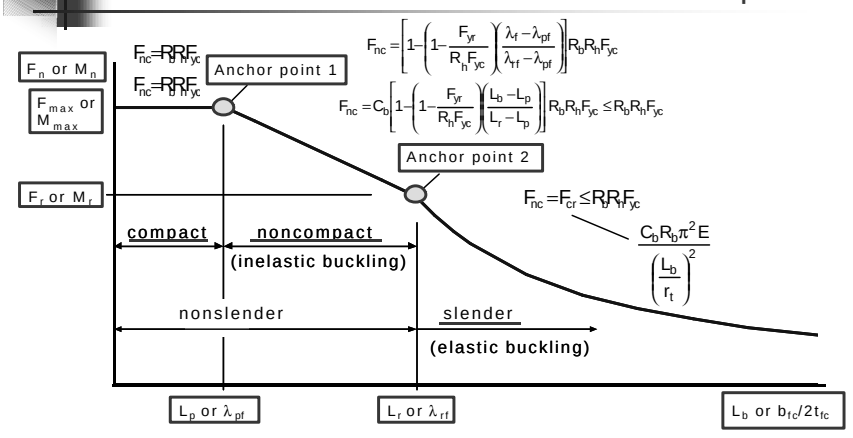

LAT. TORSIONAL BUCKLING RESISTANCE (Article 6.10.8.2.3)

- Determine the limiting unbraced length, L_r:

$$L_r = \pi r_t \sqrt{\frac{E}{F_{yr}}} \qquad \text{Eq. (6.10.8.2.3-5)}$$

where: $F_{yr} = 0.7F_{yc} \leq F_{yw}$

$F_{yr} = 0.7(50) = 35.0$ ksi < 50 ksi ($\geq 0.5F_{yc} = 25$ ksi ok)

Therefore: $L_r = \frac{\pi(3.90)}{12}\sqrt{\frac{29{,}000}{35.0}} = 29.39$ ft

BSDI

SITE BLAUVELT ENGINEERS a TRC company

LAT. TORSIONAL BUCKLING RESISTANCE (Article 6.10.8.2.3)

- Since $L_p = 7.83$ ft $< L_b = 24.0$ ft $< L_r = 29.39$ ft:

$$F_{nc} = C_b\left[1 - \left(1 - \frac{F_{yr}}{R_hF_{yc}}\right)\frac{L_b - L_p}{L_r - L_p}\right]R_bR_hF_{yc} \leq R_bR_hF_{yc}$$

Eq. (6.10.8.2.3-2)

$$F_{nc} = 1.0\left[1 - \left(1 - \frac{35.0}{1.0(50)}\right)\frac{24.0 - 7.83}{29.39 - 7.83}\right](1.0)(1.0)(50) = 38.75 \text{ ksi}$$

$< 1.0(1.0)(50) = 50$ ksi

Therefore: $F_{nc_{LTB}} = 38.75$ ksi ($< F_{nc_{FLB}} = 50.0$ ksi)

BSDI

$\therefore F_{nc} = F_{nc_{LTB}} = 38.75$ ksi

SITE BLAUVELT ENGINEERS a TRC company

6.10.8 Flexural Resistance - Composite Sections in Negative Flexure & Noncomposite Sections

Basic Form of All FLB & LTB Eqs

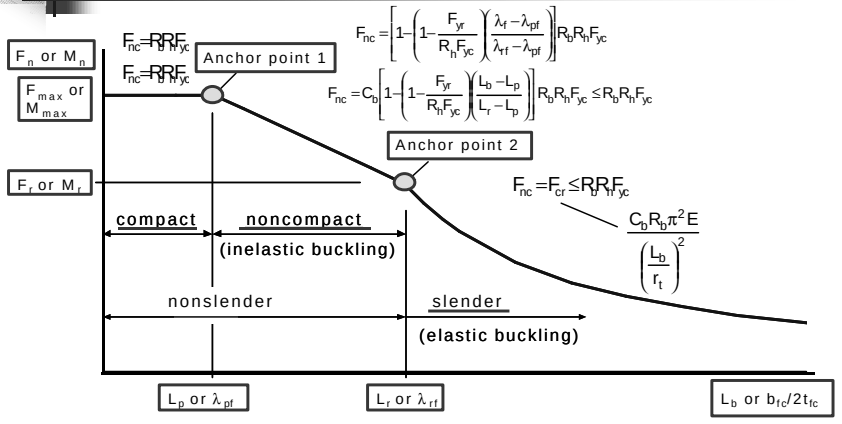

CONSTRUCTIBILITY - FLEXURE

Top Flange

For STRENGTH I:

$$f_{bu} + f_\ell \le \phi_f R_h F_{yc} \qquad \text{Eq. (6.10.3.2.1-1)}$$

$$f_{bu} + f_\ell = |-27.41\text{ ksi}| + 14.79\text{ ksi} = 42.20\text{ ksi}$$

$$\phi_f R_h F_{yc} = 1.0(1.0)(50) = 50.0\text{ ksi}$$

$$42.20\text{ ksi} < 50.0\text{ ksi} \quad \text{ok} \qquad (\text{Ratio} = 0.844)$$

$$f_{bu} + \frac{1}{3} f_\ell \le \phi_f F_{nc} \qquad \text{Eq. (6.10.3.2.1-2)}$$

$$f_{bu} + \frac{1}{3} f_\ell = |-27.41|\text{ ksi} + \frac{14.79}{3}\text{ ksi} = 32.34\text{ ksi}$$

$$\phi_f F_{nc} = 1.0(38.75) = 38.75\text{ ksi}$$

$$32.34\text{ ksi} < 38.75\text{ ksi} \quad \text{ok} \qquad (\text{Ratio} = 0.835)$$

BSDI

SITE BLAUVELT ENGINEERS a TRC company

WEB BEND-BUCKLING RESISTANCE (Article 6.10.1.9)

$$F_{crw} = \frac{0.9Ek}{\left(\frac{D}{t_w}\right)^2} \le \min(R_h F_{yc}, F_{yw}/0.7)$$

Eq. (6.10.1.9.1-1)

$$k = \frac{9}{(D_c/D)^2}$$

$$k = \frac{9}{(38.63/69.0)^2} = 28.7$$

$$F_{crw} = \frac{0.9(29{,}000)(28.7)}{\left(\frac{69.0}{0.5}\right)^2} = 39.33 \text{ ksi} < R_h F_{yc} = 1.0(50) = 50 \text{ ksi} \quad \text{ok}$$

BSDI

SITE BLAUVELT ENGINEERS a TRC company

CONSTRUCTIBILITY - FLEXURE Web & Top Flange (continued)

$$f_{bu} \le \phi_f F_{crw}$$ Eq. (6.10.3.2.1-3)

$\phi_f F_{crw} = 1.0(39.33) = 39.33$ ksi

$|-27.41 \text{ ksi}| < 39.33$ ksi ok (Ratio = 0.697)

For STRENGTH IV:

$$f_{bu} + f_\ell \le \phi_f R_h F_{yc}$$ Eq. (6.10.3.2.1-1)

$f_{bu} + f_\ell = |-32.89 \text{ ksi}| + 14.87 \text{ ksi} = 47.76$ ksi

$\phi_f R_h F_{yc} = 1.0(1.0)(50) = 50.0$ ksi

47.76 ksi < 50.0 ksi ok (Ratio = 0.955)

BSDI

SITE BLAUVELT ENGINEERS a TRC company

CONSTRUCTIBILITY - FLEXURE
Top Flange (continued) & Web

$$f_{bu} + \frac{1}{3} f_{\ell} \le \phi_f F_{nc} \qquad \text{Eq. (6.10.3.2.1-2)}$$

$$f_{bu} + \frac{1}{3} f_{\ell} = \left| -32.89 \text{ ksi} \right| + \frac{14.87}{3} \text{ ksi} = 37.85 \text{ ksi}$$

$$\phi_f F_{nc} = 1.0(38.75) = 38.75 \text{ ksi}$$

$$37.85 \text{ ksi} < 38.75 \text{ ksi} \quad \text{ok} \qquad (\text{Ratio} = 0.977)$$

$$f_{bu} \le \phi_f F_{crw} \qquad \text{Eq. (6.10.3.2.1-3)}$$

$$\phi_f F_{crw} = 1.0(39.33) = 39.33 \text{ ksi}$$

$$\left| -32.89 \text{ ksi} \right| < 39.33 \text{ ksi} \quad \text{ok} \qquad (\text{Ratio} = 0.836)$$

BSDI

SITE BLAUVELT ENGINEERS a TRC company

CONSTRUCTIBILITY
Wind Load - Section 1-1

- Calculate f_{bu} due to the steel weight within the unbraced length containing Section 1-1:

For STRENGTH III:

Top Flange: $f_{bu} = \dfrac{1.0(1.25)(352)(12)}{1{,}581} = -3.34 \text{ ksi}$

Bottom Flange: $f_{bu} = \dfrac{1.0(1.25)(352)(12)}{1{,}973} = 2.68 \text{ ksi}$

- Calculate the factored wind force on the steel section:

$$W = \frac{1.0(1.25)(0.053)(2.0 + 69.0 + 2.0)}{12} = 0.403 \text{ kips / ft}$$

BSDI

SITE BLAUVELT ENGINEERS a TRC company

BRIDGE FRAMING PLAN

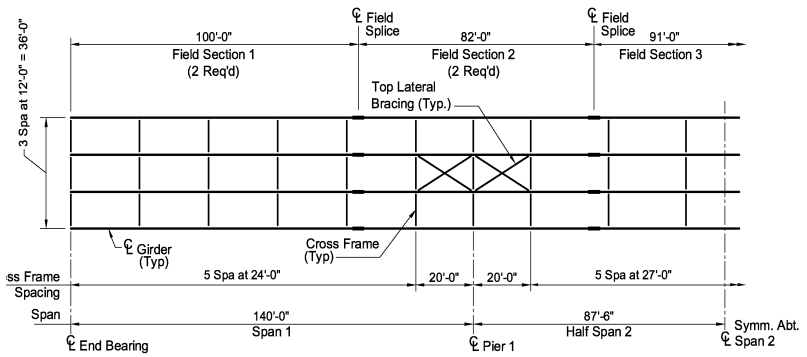

BSDI

SITE BLAUVELT ENGINEERS a TRC company

CONSTRUCTIBILITY
Wind Load - Section 1-1 (continued)

- Assume Span 1 of the structure resists the lateral wind force as a propped cantilever with an effective span length of 120¢-0² (i.e. assume top lateral bracing provides an effective line of fixity 20¢-0² from the pier):

$$M_{1-1} = \frac{9}{128} W L_e^2 = \frac{9}{128}(0.403)(120.0)^2 = 408.0 \text{ kip - ft}$$

(<u>Note:</u> refined 3D analysis => 405.0 kip-ft)

BSDI

SITE BLAUVELT ENGINEERS a TRC company

CONSTRUCTIBILITY
Wind Load - Section 1-1 (continued)

- Proportion total lateral moment to top & bottom flanges according to relative lateral stiffness of each flange. Then, divide total lateral moment equally to each girder:

Top Flg: $I_\ell = \dfrac{1(16)^3}{12} = 341.3 \text{ in.}^4$ Bot Flg: $I_\ell = \dfrac{1.375(18)^3}{12} = 668.3 \text{ in.}^4$

Top Flange: $M_\ell = \dfrac{408.0(341.3)}{(341.3 + 668.3)4} = 34.48 \text{ kip - ft}$

Bottom Flange: $M_\ell = \dfrac{408.0(668.3)}{(341.3 + 668.3)4} = 67.52 \text{ kip - ft}$

B S D I

SITE BLAUVELT ENGINEERS a TRC company

CONSTRUCTIBILITY
Wind Load - Section 1-1 (continued)

- Separate calculations indicate that lateral bending stresses in the top (compression) flange may be determined from a first-order analysis (i.e. no amplification is required).

Top Flange: $f_\ell = \dfrac{34.48(12)}{1(16)^2/6} = 9.70 \text{ ksi} < 0.6F_{yf} = 30.0 \text{ ksi}$ ok

Bottom Flange: $f_\ell = \dfrac{67.52(12)}{1.375(18)^2/6} = 10.91 \text{ ksi} < 0.6F_{yf} = 30.0 \text{ ksi}$ ok

B S D I

SITE BLAUVELT ENGINEERS a TRC company

BRIDGE FRAMING PLAN

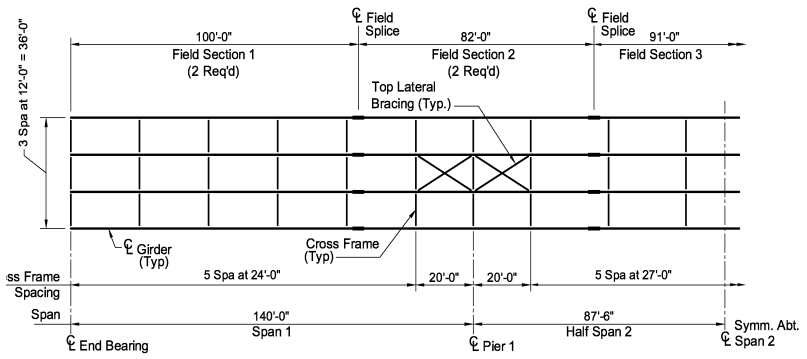

BSDI

SITE BLAUVELT ENGINEERS a TRC company

CONSTRUCTIBILITY
Wind Load - Section 1-1 (continued)

- **Calculate the shear in the propped cantilever at the assume effective line of fixity:**

$$V_{f-f} = \frac{5}{8} W L_e = \frac{5}{8}(0.403)(120.0) = 30.23 \text{ kips}$$

- **Resolve the shear into a compressive force in the diagonal of the top bracing:**

$$P = 30.23\left(\frac{\sqrt{(20.0)^2 + (12.0)^2}}{12.0}\right) = -58.76 \text{ kips}$$

BSDI

SITE BLAUVELT ENGINEERS a TRC company

CONSTRUCTIBILITY
Wind Load - Section 1-1 (continued)

- Separate calculations (see example) indicate a compressive force of -19.04 kips in the diagonal to the self-weight of the steel. Therefore, the total compressive force in the bracing diagonal is:

(-58.76 kips) + (-19.04 kips) = -77.80 kips

(Note: refined 3D analysis => -67.0 kips)

B S D I

SITE BLAUVELT ENGINEERS a TRC company

CONSTRUCTIBILITY
Wind Load - Section 1-1 (continued)

- Estimate the maximum lateral deflection of Span 1 of the structure (i.e. the propped cantilever) due to the factored wind load using the total lateral moments of inertia of the top & bottom flanges of all four girders at Section 1-1:

$$D_{\ell max.} = \frac{WL_e^4}{185EI} = \frac{0.403(120.0)^4(1,728)}{185(29,000)(341.3 + 668.3)4} = 6.7 \text{ in.}$$

(Note: refined 3D analysis => 7.0 inches)

- If the top lateral bracing were not present:

L_e = 140'-0" => $D_{\ell\ max.}$ = 12.3 inches

B S D I

SITE BLAUVELT ENGINEERS a TRC company

CONSTRUCTIBILITY
Performance Ratios

POSITIVE-MOMENT REGION, SPAN 1 (Section 1-1)

Constructibility (Slender-web section)	
Flexure (STRENGTH I)	
Eq. (6.10.3.2.1-1) – Top flange	0.844
Eq. (6.10.3.2.1-2) – Top flange	0.835
Eq. (6.10.3.2.1-3) – Web bend buckling	0.697
Eq. (6.10.3.2.2-1) – Bottom flange	0.535
Flexure (STRENGTH III – Wind load on noncomposite structure)	
Eq. (6.10.3.2.1-1) – Top flange	0.261
Eq. (6.10.3.2.1-2) – Top flange	0.170
Eq. (6.10.3.2.1-3) – Web bend buckling	0.085
Eq. (6.10.3.2.2-1) – Bottom flange	0.272
Flexure (STRENGTH IV)	
Eq. (6.10.3.2.1-1) – Top flange	0.955
Eq. (6.10.3.2.1-2) – Top flange	0.977
Eq. (6.10.3.2.1-3) – Web bend buckling	0.836
Eq. (6.10.3.2.2-1) – Bottom flange	0.602
Shear (96¢-0² from the abutment) (STRENGTH IV)	0.447

B S D I

SITE BLAUVELT ENGINEERS a TRC company

CONSTRUCTIBILITY
Shear (Article 6.10.3.3)

- **Interior panels of stiffened webs must satisfy:**

$$V_u \leq f_v V_{cr} \qquad \text{Eq. (6.10.3.3-1)}$$

$$(V_u)_{DC_1} = 1.0(1.5)(-79) = -119 \text{ kips}$$

at 96¢-0² from the abutment

$$V_n = V_{cr} = CV_p \qquad \text{Eq. (6.10.9.3.3-1)}$$

$$V_p = 0.58F_{yw}Dt_w = 1{,}001 \text{ kips}$$

C = 0.266 (for 207-inch stiffener spacing)

$$V_{cr} = 0.266(1{,}001) = 266 \text{ kips} > V_u = |-119| \text{ kips} \qquad \text{(Ratio = 0.447)}$$

B S D I

SITE BLAUVELT ENGINEERS a TRC company

CONSTRUCTIBILITY
Section 2-2 (Interior Pier)

- In regions of negative flexure, the constructibility checks for flexure generally do not control because the sizes of the flanges in these regions are normally governed by the sum of the factored dead and live load stresses at the strength limit state. Also, the maximum accumulated negative moments during the deck placement in these regions typically do not differ significantly from the calculated DC_1 negative moments. Deck overhang brackets and wind loads do induce lateral bending into the flanges, which can be considered using the flexural design equations.
- Web bend-buckling and shear should always be checked in these regions for critical stages of construction (refer to the design example).

B S D I

SITE BLAUVELT ENGINEERS a TRC company

CONSTRUCTIBILITY
Concrete Deck (Article 6.10.3.2.4)

- Unless longitudinal reinforcement is provided according to the provisions of Article 6.10.1.7,

$$f_{deck} \leq \phi f_r = 0.9 f_r$$

$$f_r = 0.24\sqrt{f'_c} = 0.24\sqrt{4.0} = 0.480 \text{ ksi}$$

$$\phi f_r = 0.90(0.480) = 0.432 \text{ ksi}$$

B S D I

SITE BLAUVELT ENGINEERS a TRC company

Table 1: Moments from Deck-Placement Analysis

Span -> 1	Unfactored Dead-Load Moments (kip-ft)								
Length (ft)	12.00	24.00	42.00	48.00	56.00	72.00	84.00	96.00	100.00
Steel Weight	143	250	341	353	**352**	296	206	74	21
SIP Forms (SIP)	63	110	147	151	150	124	84	27	4
Cast									
1	870	1544	2189	2306	2387	2286	1983	1484	1275
2	-168	-336	-589	-673	-786	-1010	-1179	-1347	**-1403**
3	14	28	50	57	67	86	101	115	120
Sum of Casts + SIP	779	1346	1797	1841	1818	1486	989	279	-4
Max. +M	933	1654	2336	2457	**2537**	2410	2067	1511	1279
DC_2 + DW	275	477	643	661	657	551	386	148	52
Deck, haunches + SIP	786	1360	1822	1870	**1850**	1528	1038	335	53

M = 352 + 2,537 = *2,889 kip-ft*

CONSTRUCTIBILITY
Concrete Deck (continued)

- **Calculate the longitudinal concrete deck tensile stress at the end of Cast 1 (use n = 8):**

$$f_{deck} = \frac{1.0(1.5)(-1{,}403)(23.20)(12)}{161{,}518(8)} = 0.453 \text{ ksi} > 0.432 \text{ ksi}$$

- **Therefore, provide one-percent longitudinal reinforcement (No. 6 bars or smaller @ £ 12²). Extend to 95.0 feet from the abutment.**
- **Tensile force = (0.453)(100.0)(9.0) = 408 kips**

BSDI

SITE BLAUVELT ENGINEERS a TRC company

Service Limit State

B S D I

SITE BLAUVELT ENGINEERS a TRC company

SERVICE LIMIT STATE
Elastic Deformations (Article 6.10.4.1)

- Use suggested minimum span-to-depth ratios (optional - Article 2.5.2.6.3)
- Check live-load deflections (optional - Article 2.5.2.6.2):

End Spans: $D_{ALLOW} = \frac{140.0(12)}{800} = 2.10 \text{ in.} > 0.91 \text{ in.}$ ok

Center Span: $D_{ALLOW} = \frac{175.0(12)}{800} = 2.63 \text{ in.} > 1.23 \text{ in.}$ ok

B S D I

SITE BLAUVELT ENGINEERS a TRC company

SERVICE LIMIT STATE
Permanent Deformations (Article 6.10.4.2)

- **Under the SERVICE II load combination:**

$$1.0DC + 1.0DW + 1.3(LL+IM)$$

Top steel flange of composite sections: $f_f \leq 0.95R_hF_{yf}$

Eq. (6.10.4.2.2-1)

Bottom steel flange of composite sections: $f_f + \frac{f_\ell}{2} \leq 0.95R_hF_{yf}$

Eq. (6.10.4.2.2-2)

Web bend-buckling: $f_c \leq F_{crw}$

Eq. (6.10.4.2.2-4)

BSDI

SITE BLAUVELT ENGINEERS a TRC company

SERVICE LIMIT STATE
Permanent Deformations (continued)

- **Check top flange (Section 1-1):**

$$0.95R_hF_{yf} = 0.95(1.0)(50) = 47.50\ \text{ksi}$$

$$f_f \leq 0.95R_hF_{yf}$$

$$f_f = 1.0\left[\frac{1.0(2{,}202)}{1{,}581} + \frac{1.0(335+322)}{4{,}863} + \frac{1.3(3{,}510)}{13{,}805}\right]12 = -22.30\ \text{ksi}$$

$$|-22.30|\ \text{ksi} < 47.50\ \text{ksi} \quad \text{ok}$$

$$(\text{Ratio} = 0.469)$$

BSDI

SITE BLAUVELT ENGINEERS a TRC company

SERVICE LIMIT STATE
Permanent Deformations (continued)

- **Check bottom flange (Section 1-1):**

$$f_f + \frac{f_\ell}{2} \leq 0.95 R_h F_{yf}$$

$$f_f = 1.0\left[\frac{1.0(2{,}202)}{1{,}973} + \frac{1.0(335 + 322)}{2{,}483} + \frac{1.3(3{,}510)}{2{,}706}\right]12 = 36.80 \text{ ksi}$$

$$36.80 \text{ ksi} + 0 < 47.50 \text{ ksi} \qquad \text{ok}$$

$$(\text{Ratio} = 0.775)$$

- **For composite sections in positive flexure with $D/t_w \leq 150$, web bend-buckling need not be checked at the service limit state.**

BSDI

SITE BLAUVELT ENGINEERS a TRC company

SERVICE LIMIT STATE
Permanent Deformations (continued)

- **Check Section 2-2 (interior pier):**
  - ***Article 6.10.4.2.1* -- for members with shear connectors provided throughout their entire length that also satisfy the provisions of Article 6.10.1.7 (i.e. one percent longitudinal reinforcement is provided in the deck wherever the tensile stress in the deck due to the factored construction loads or the SERVICE II load combination exceeds the modulus of rupture), flexural stresses caused by SERVICE II loads applied to the composite section may be computed using the short-term or long-term composite section, as appropriate, assuming the concrete deck is effective for both positive and negative flexure.**

BSDI

SITE BLAUVELT ENGINEERS a TRC company

SERVICE LIMIT STATE
Permanent Deformations (continued)

- **Check Section 2-2 (interior pier):**
  - **Flange major-axis bending stresses at Section 2-2 and at the first flange transition located 15¢-0² from the interior pier are checked under the SERVICE II load combination and do not control. Stresses acting on the composite section are computed assuming the concrete is effective for negative flexure, as permitted in Article 6.10.4.2.1.**
  - **Web bend-buckling must be checked for composite sections in negative flexure under the SERVICE II load combination:**

$$f_c \leq F_{crw} \qquad \text{Eq. (6.10.4.2.2-4)}$$

BSDI

SITE BLAUVELT ENGINEERS a TRC company

WEB BEND-BUCKLING RESISTANCE (Article 6.10.1.9)

$$F_{crw} = \frac{0.9Ek}{\left(\frac{D}{t_w}\right)^2} \leq \min(R_h F_{yc}, F_{yw}/0.7) \qquad \text{Eq. (6.10.1.9.1-1)}$$

where: $$k = \frac{9}{(D_c/D)^2} \qquad \text{Eq. (6.10.1.9.1-2)}$$

- **According to Article D6.3.1 (Appendix D), for composite sections in negative flexure at the service limit state where the concrete is considered effective in tension for computing flexural stresses on the composite section, as permitted in Article 6.10.4.2.1, D_c is to be computed as:**

$$D_c = \left(\frac{-f_c}{|f_c| + f_t}\right) d - t_{fc} \geq 0 \qquad \text{Eq. (D6.3.1-1)}$$

BSDI

SITE BLAUVELT ENGINEERS a TRC company

WEB BEND-BUCKLING RESISTANCE (Article 6.10.1.9)

- Check the bottom-flange transition (controls):

$$f_f = 1.0\left[\frac{1.0(-2{,}656)}{1{,}789} + \frac{1.0(-373 + -358)}{2{,}246} + \frac{1.3(-2{,}709)}{2{,}463}\right]12 = -38.88 \text{ ksi}$$

$$D_c = \left[\frac{-(-38.88)}{|-38.88| + 23.51}\right]71.0 - 1.0 = 43.25 \text{ in.} > 0 \quad \text{ok}$$

$$k = \frac{9}{(43.25/69.0)^2} = 22.9$$

$$F_{crw} = \frac{0.9(29{,}000)(22.9)}{\left[\frac{69.0}{0.5625}\right]^2} = 39.72 \text{ ksi} \qquad |-38.88| < 39.72 \text{ ksi}$$

ok Ratio = (0.979)

BSDI

SITE BLAUVELT ENGINEERS a TRC company

SERVICE LIMIT STATE
Performance Ratios

POSITIVE-MOMENT REGION, SPAN 1 (Section 1-1)

Service Limit State

Live-load deflection	0.433
Permanent deformations (SERVICE II)	
Eq. (6.10.4.2.2-1) – Top flange	0.469
Eq. (6.10.4.2.2-2) – Bottom flange	0.775

INTERIOR-PIER SECTION (Section 2-2)

Permanent deformations (SERVICE II)	
Eq. (6.10.4.2.2-1) – Top flange @ Section 2-2	0.415
Eq. (6.10.4.2.2-1) – Top flange @ Flange transition	0.368
Eq. (6.10.4.2.2-2) – Bottom flange @ Section 2-2	0.604
Eq. (6.10.4.2.2-2) – Bottom flange @ Flange transition	0.609
Eq. (6.10.4.2.2-4) – Web bend buckling @ Section 2-2	0.898
Eq. (6.10.4.2.2-4) – Web bend buckling @ Flange transition	0.979

BSDI

SITE BLAUVELT ENGINEERS a TRC company

SERVICE LIMIT STATE
Concrete Deck (Article 6.10.1.7)

- Calculate the longitudinal concrete deck tensile stress in Span 1 at 95.0 ft from the abutment (use n = 8):

$$f_{deck} = \frac{1.0\left[1.0(87) + 1.0(83) + 1.3(-1{,}701)\right](23.20)(12)}{161{,}518(8)} = 0.440 \text{ ksi}$$

$$> 0.90 f_r = 0.432 \text{ ksi}$$

- Therefore, extend the one-percent longitudinal reinforcement (No. 6 bars or smaller @ £ 12²) to 94.0 feet from the abutment.

f_{deck} = 0.430 ksi < 0.432 ksi ok

BSDI

SITE BLAUVELT ENGINEERS a TRC company

Fatigue & Fracture Limit State

BSDI

SITE BLAUVELT ENGINEERS a TRC company

Fatigue Provisions

Result in two branches in flow of fatigue design, infinite life design and finite life design.

Stress Range Versus Number of Cycles

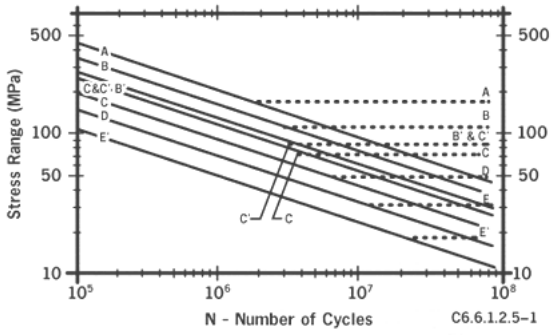

FATIGUE RESISTANCE

- **FIRST PRINCIPAL**

For lower traffic volumes, fatigue resistance is inversely proportional to the cube of the effective stress range.

B S D I

SITE BLAUVELT ENGINEERS a TRC company

FATIGUE RESISTANCE

- **SECOND PRINCIPAL**

  For higher traffic volumes, fatigue resistance is infinite if the maximum stress range is less than the constant-amplitude fatigue threshold.

B S D I

SITE BLAUVELT ENGINEERS a TRC company

FATIGUE LOAD
(Article 3.6.1.4)

- **The specified load condition for fatigue is a single truck; the current HS20 truck with a fixed rear-axle spacing of 30¢-0².**
- **The truck occupies a single lane on the bridge -- not multiple lanes.**
- **The fatigue load produces a lower calculated stress range than the Standard Specifications.**

B S D I

SITE BLAUVELT ENGINEERS a TRC company

Load Combinations and Load Factors

Load Combination / Limit State	DC DD DW EH EV ES	LL IM CE BR PL LS	WA	WS	WL	FR	TU CR SH	TG	SE	Use One of These at a Time			
										EQ	IC	CT	CV
STRENGTH-I	$?_p$	1.75	1.00	-	-	1.00	0.50/1.20	$?_{TG}$	$?_{SE}$	-	-	-	-
STRENGTH-II	$?_p$	1.35	1.00	-	-	1.00	0.50/1.20	$?_{TG}$	$?_{SE}$	-	-	-	-
STRENGTH-III	$?_p$	-	1.00	1.40	-	1.00	0.50/1.20	$?_{TG}$	$?_{SE}$	-	-	-	-
STRENGTH-IV EH, EV, ES, DW DC ONLY	$?_p$ 1.5	-	1.00	-	-	1.00	0.50/1.20	-	-	-	-	-	-
STRENGTH-V	$?_p$	1.35	1.00	0.40	0.40	1.00	0.50/1.20	$?_{TG}$	$?_{SE}$	-	-	-	-
EXTREME-I	$?_p$	$?_{EQ}$	1.00	-	-	1.00	-	-	-	1.00	-	-	-
EXTREME-II	$?_p$	0.50	1.00	-	-	1.00	-	-	-	-	1.00	1.00	1.00
SERVICE-I	1.00	1.00	1.00	0.30	0.30	1.00	1.00/1.20	$?_{TG}$	$?_{SE}$	-	-	-	-
SERVICE-II	1.00	1.30	1.00	-	-	1.00	1.00/1.20	-	-	-	-	-	-
SERVICE-III	1.00	0.80	1.00	-	-	1.00	1.00/1.20	$?_{TG}$	$?_{SE}$	-	-	-	-
FATIGUE-LL, IM & CE ONLY	-	0.75	-	-	-	-	-	-	-	-	-	-	-

BSDI

SITE BLAUVELT ENGINEERS a TRC company

FATIGUE LOAD - (continued)

- In the LRFD Specification, 75% of the stress range due to the fatigue load is considered to be representative of the *effective stress range*; that is, the stress range due to an HS-15 truck weighing 54.0 kips with a fixed rear-axle spacing of 30¢-0[2] (FATIGUE load combination -- load factor = 0.75)
- The *maximum stress range* is assumed to be *twice* the effective stress range (i.e. stress range due to a 108-kip truck)

BSDI

SITE BLAUVELT ENGINEERS a TRC company

NOMINAL FATIGUE RESISTANCE
(Article 6.6.1.2.5)

- **In the LRFD Specifications, the nominal fatigue resistance is specified as follows:**

$$(\Delta F)_n = \left(\frac{A}{N}\right)^{\frac{1}{3}} \geq \frac{1}{2}(\Delta F)_{TH} \qquad \text{Eq. (6.6.1.2.5-1)}$$

$$N = (365)(75)n(ADTT)_{SL} \qquad \text{Eq. (6.6.1.2.5-2)}$$

A = detail category constant (Table 6.6.1.2.5-1)

n = cycles per truck passage (Table 6.6.1.2.5-2)

$(\Delta F)_{TH}$ = constant-amplitude fatigue threshold (Table 6.6.1.2.5-3)

B S D I

SITE BLAUVELT ENGINEERS a TRC company

In the absence of better information, single-lane average daily truck traffic shall be taken as:

$$ADTT_{SL} = p \times ADTT \qquad (3.6.1.4.2\text{–}1)$$

where—

ADTT = the number of trucks per day in one direction averaged over the design life

$ADTT_{SL}$ = the number of trucks per day in a single-lane averaged over the design life

p = fraction of truck traffic in a single-lane

Fraction of Truck Traffic in a Single-Lane, p (3.6.1.4.2–1)

Number of Lanes Available to Trucks	p
1	1.00
2	0.85
3 or more	0.80

The single-lane ADTT is for the traffic lane where the majority of the truck traffic crosses the bridge. Typically, with no nearby ramps, the shoulder lane carries most of the truck traffic.

Since future traffic patterns on the bridge are uncertain, the frequency of the fatigue load for a single-lane is assumed to apply to all lanes.

55

NOMINAL FATIGUE RESISTANCE

- **In the LRFD Specifications, the nominal fatigue resistance is specified as follows:**

$$(\Delta F)_n = \left(\frac{A}{N}\right)^{\frac{1}{3}} \geq \frac{1}{2}(\Delta F)_{TH} \qquad \text{Eq. (6.6.1.2.5-1)}$$

$$N = (365)(75)n(ADTT)_{SL} \qquad \text{Eq. (6.6.1.2.5-2)}$$

A = detail category constant (Table 6.6.1.2.5-1)

n = cycles per truck passage (Table 6.6.1.2.5-2)

$(\Delta F)_{TH}$ = constant-amplitude fatigue threshold (Table 6.6.1.2.5-3)

BSDI

SITE BLAUVELT ENGINEERS a TRC company

NOMINAL FATIGUE RESISTANCE (continued)

- **First and Second Principles of Fatigue Resistance**

$$(\Delta f)_e \le \left(\frac{A}{N}\right)^{\frac{1}{3}}$$

$$(\Delta f)_{max} \le (\Delta F)_{TH}$$

$$(\Delta f)_{max} = 2.0(\Delta f)_e$$

$$\therefore (\Delta f)_e \le \frac{1}{2}(\Delta F)_{TH}$$

BSDI

SITE BLAUVELT ENGINEERS a TRC company

NOMINAL FATIGUE RESISTANCE (continued)

- **These LRFD Specification principals can be used for design or evaluation :**

BSDI

SITE BLAUVELT ENGINEERS a TRC company

Fatigue Provisions

These LRFD Specification principles can be used for design or evaluation.

The provisions of the *Standard Specifications* ***cannot*** be used for evaluation.

FATIGUE & FRACTURE LIMIT STATE

Load Induced Fatigue (Article 6.6.1.2)

$(ADTT)_{SL} = p \times ADTT$ Eq. (3.6.1.4.2-1)

where ADTT = number of trucks per day in one direction averaged over the design life (assumed to be 2,000 for this example)

For a 3-lane bridge: $p = 0.80$ (Table 3.6.1.4.2-1)

\ $(ADTT)_{SL} = 0.80(2{,}000) = 1{,}600$ trucks/day

BSDI

SITE BLAUVELT ENGINEERS a TRC company

FATIGUE & FRACTURE LIMIT STATE
Load Induced Fatigue (continued)

- *Article 6.6.1.2.1* -- for flexural members with shear connectors provided throughout their entire length, and with concrete deck reinforcement satisfying the provisions of Article 6.10.1.7 (i.e. one percent longitudinal reinforcement is provided in the deck wherever the tensile stress in the deck due to the factored construction loads or the SERVICE II load combination exceeds the modulus of rupture), the live-load stress range may be computed using the short-term composite section assuming the concrete deck is effective for both positive and negative flexure.

B S D I

SITE BLAUVELT ENGINEERS a TRC company

FATIGUE & FRACTURE LIMIT STATE
Load Induced Fatigue (continued)

- Check the top-flange connection-plate weld at 72´-0” from the abutment in Span 1:

$$f_{DC_1} = \frac{1{,}824(12)(38.63)}{62{,}658} = -13.49 \text{ ksi}$$

$$f_{DC_2} = \frac{281(12)(23.13)}{117{,}341} = -0.665 \text{ ksi}$$

$$-14.16 \text{ ksi}$$

$$f_{LL+IM} = \frac{2(0.75)|-496|(12)(10.70)}{161{,}518} = 0.591 \text{ ksi}$$

$$|-14.16| \text{ ksi} > 0.591 \text{ ksi}$$

- Fatigue need not be checked at this detail.

B S D I

SITE BLAUVELT ENGINEERS a TRC company

FATIGUE & FRACTURE LIMIT STATE
Load Induced Fatigue (continued)

- **Check the bottom-flange connection-plate weld at 72´-0" from the abutment in Span 1 -- use the n-composite stiffness to compute the stress range as permitted in Art. 6.6.1.2.1:**

$$?(?f) = \frac{0.75(1{,}337)(12)(58.31)}{161{,}518} + \frac{0.75|-496|(12)(58.31)}{161{,}518}$$

$$= 5.96 \text{ ksi}$$

$$(DF)_n = \left(\frac{A}{N}\right)^{\frac{1}{3}} \geq \frac{1}{2}(DF)_{TH}$$ Eq. (6.6.1.2.5-1)

BSDI

SITE BLAUVELT ENGINEERS a TRC company

75-Year $ADTT_{SL}$ Equivalent to Infinite Life (C.6.6.1.2.5–1)

Category	$ADTT_{SL}$
A	535
B	865
B'	1035
C	1290
C'	745
D	1875
E	3545
E'	6525

FATIGUE & FRACTURE LIMIT STATE
Load Induced Fatigue (continued)

$(ADTT)_{SL}$ = 1,600 > 745 trucks per day (Category C¢)

$$(DF)_n = \frac{1}{2}(DF)_{TH}$$

For a Category C¢ detail, $(DF)_{TH}$ = 12.0 ksi (Table 6.6.1.2.5-3). Therefore:

$$(DF)_n = \frac{1}{2}(12.0) = 6.00 \text{ ksi}$$

$$g(Df) \pounds (DF)_n \qquad \text{Eq. (6.6.1.2.2-1)}$$

5.96 ksi < 6.00 ksi ok (Ratio = 0.993)

B S D I

SITE BLAUVELT ENGINEERS a TRC company

FATIGUE & FRACTURE LIMIT STATE
Performance Ratios

POSITIVE-MOMENT REGION, SPAN 1 (Section 1-1)

Fatigue and Fracture Limit State

Base metal at connection plate weld to bottom flange (72¢-0² from the abutment)	0.993
Stud shear connector weld to top flange (100¢-0² from the abutment)	0.208
Special fatigue requirement for webs (7¢-3² from the abutment)	0.618

INTERIOR-PIER SECTION (Section 2-2)

Fatigue and Fracture Limit State

Base metal at connection plate weld to top flange (20¢-0² to the left of the interior pier)	0.113
Special fatigue requirement for webs (shear at interior pier)	0.636

B S D I

SITE BLAUVELT ENGINEERS a TRC company

FATIGUE & FRACTURE LIMIT STATE

Special Fatigue Req. for Webs (Article 6.10.5.3)

- Interior panels of stiffened webs must satisfy:

$$V_u \leq V_{cr} \qquad \text{Eq. (6.10.5.3-1)}$$

$$V_u = 73.0 + 11 + 10 + 2(0.75)(47) = 165 \text{ kips}$$

at 7¢-3² from the abutment

$$V_n = V_{cr} = CV_p \qquad \text{Eq. (6.10.9.3.3-1)}$$

$$V_p = 0.58F_{yw}Dt_w = 1{,}001 \text{ kips}$$

C = 0.267 (for 201-inch stiffener spacing)

$$V_{cr} = 0.267(1{,}001) = 267 \text{ kips} > V_u = 165.0 \text{ kips}$$ ok (Ratio = 0.618)

BSDI

SITE BLAUVELT ENGINEERS a TRC company

Strength Limit State

BSDI

SITE BLAUVELT ENGINEERS a TRC company

STRENGTH LIMIT STATE
Section 1-1 (@0.4L_1)

- Section 1-1 qualifies as a compact section if (Art. 6.10.6.2.2):
  - F_y £ 70 ksi ok
  - D/t_w £ 150 ok
  - $\frac{2D_{cp}}{t_w} \pounds 3.76\sqrt{\frac{E}{F_{yc}}}$ ok

    N.A. of composite section at the plastic moment is in the top flange \ $D_{cp} = 0$

  => Go to Art. 6.10.7.1.1 (Compact sections)

BSDI

SITE BLAUVELT ENGINEERS a TRC company

STRENGTH LIMIT STATE
Section 1-1 (continued)

- Compact composite sections in positive flexure must satisfy the following ductility requirement:

$$D_p \pounds 0.42D_t \qquad \text{Eq. (6.10.7.3-1)}$$

D_p = distance from top of deck to N.A. at plastic moment

D_t = total depth of the composite section

$$D_p = 9.0 + 3.5 - 1.0 + 0.44 = 11.94 \text{ in.}$$

$$D_t = 1.375 + 69.0 + 3.5 + 9.0 = 82.88 \text{ in.}$$

$$0.42D_t = 0.42(82.88) = 34.81 \text{ in.} > 11.94 \text{ in.} \quad \text{ok}$$

BSDI

SITE BLAUVELT ENGINEERS a TRC company

STRENGTH LIMIT STATE
Section 1-1 (continued)

- Compact sections in positive flexure must satisfy the following relationship at the strength limit state (Article 6.10.7.1.1):

$$M_u + \frac{1}{3} f_\ell S_{xt} \leq \phi_f M_n \qquad \text{Eq. (6.10.7.1.1-1)}$$

where: $S_{xt} = M_{yt}/F_{yt}$

BSDI

SITE BLAUVELT ENGINEERS a TRC company

STRENGTH LIMIT STATE
Section 1-1 (continued)

- Determine lateral bending stress, f_ℓ, in the bottom flange due to the factored wind load:

$$W = \frac{\eta \gamma P_D d}{2} \qquad \text{Eq. (C4.6.2.7.1-1)}$$

$$M_w = \frac{W L_b^2}{10} \qquad \text{Eq. (C4.6.2.7.1-2)}$$

$\eta = 1.0$ $L_b = 24'\text{-}0''$ $WL = 0$

AF = 1.0 for tension flanges

BSDI

SITE BLAUVELT ENGINEERS a TRC company

STRENGTH LIMIT STATE
Section 1-1 (continued)

- For STRENGTH I: Wind not considered
- For STRENGTH III:

$$W = \frac{1.0(1.4)(0.053)(1.375 + 69.0 + 1.0)/12}{2} = 0.221 \text{ kips/ft}$$

$$M_w = \frac{0.221(24.0)^2}{10} = 12.73 \text{ kip - ft}$$

$$f_\ell = \frac{M_w}{S_\ell} = \frac{12.73(12)}{1.375(18)^2/6} = 2.06 \text{ ksi} * AF = 2.06(1.0) = 2.06 \text{ ksi}$$

$$< 0.6F_{yf} = 30.0 \text{ ksi ok}$$

B S D I

SITE BLAUVELT ENGINEERS a TRC company

STRENGTH LIMIT STATE
Section 1-1 (continued)

- For STRENGTH IV: Wind not considered
- For STRENGTH V:

$$W = \frac{1.0(0.4)(0.053)(1.375 + 69.0 + 1.0)/12}{2} = 0.063 \text{ kips/ft}$$

$$M_w = \frac{0.063(24.0)^2}{10} = 3.63 \text{ kip - ft}$$

$$f_\ell = \frac{M_w}{S_\ell} = \frac{3.63(12)}{1.375(18)^2/6} = 0.587 \text{ ksi} * AF = 0.587(1.0) = 0.587 \text{ ksi}$$

$$< 0.6F_{yf} = 30.0 \text{ ksi ok}$$

B S D I

SITE BLAUVELT ENGINEERS a TRC company

STRENGTH LIMIT STATE
Section 1-1 (continued)

- **Calculate M_u:**

For STRENGTH I:

$$M_u = 1.0[1.25(2{,}202 + 335) + 1.5(322) + 1.75(3{,}510)] = 9{,}797 \text{ kip - ft}$$

For STRENGTH III:

$$M_u = 1.0[1.25(2{,}202 + 335) + 1.5(322)] = 3{,}654 \text{ kip - ft}$$

For STRENGTH IV:

$$M_u = 1.0[1.5(2{,}202 + 335 + 322)] = 4{,}289 \text{ kip - ft}$$

For STRENGTH V:

$$M_u = 1.0[1.25(2{,}202 + 335) + 1.5(322) + 1.35(3{,}510)] = 8{,}393 \text{ kip - ft}$$

BSDI

SITE BLAUVELT ENGINEERS a TRC company

STRENGTH LIMIT STATE
Section 1-1 (continued)

- **Determine the nominal flexural resistance (Article 6.10.7.1.2)**

If $D_p \le 0.1D_t$, then: $M_n = M_p$ Eq. (6.10.7.1.2-1)

Otherwise: $M_n = M_p\left(1.07 - 0.7\dfrac{D_p}{D_t}\right)$ Eq. (6.10.7.1.2-2)

- **In a continuous span, M_n is limited to:**

$$M_n = 1.3R_hM_y \quad \text{Eq. (6.10.7.1.2-3)}$$

BSDI

SITE BLAUVELT ENGINEERS a TRC company

STRENGTH LIMIT STATE
Section 1-1 (continued)

$$0.1D_t = 0.1(82.88) = 8.29 \text{ in.} < D_p = 11.94 \text{ in.}$$

$$\therefore M_n = M_p\left(1.07 - 0.7\frac{D_p}{D_t}\right) \quad \text{Eq.(6.10.7.1.2 - 2)}$$

$$M_n = 14{,}199\left[1.07 - 0.7\left(\frac{11.94}{82.88}\right)\right] = 13{,}761 \text{ kip - ft}$$

$$\text{In a continuous span: } M_n \le 1.3R_hM_y \quad \text{Eq. (6.10.7.1.2 - 3)}$$

$$M_n = 1.3(1.0)(10{,}171) = 13{,}222 \text{ kip - ft} \quad (\text{governs})$$

$$\therefore M_n = 13{,}222 \text{ kip - ft}$$

$$S_{xt} = \frac{M_{yt}}{F_{yt}} = \frac{10{,}171(12)}{50} = 2{,}441 \text{ in}^3$$

BSDI

SITE BLAUVELT ENGINEERS a TRC company

STRENGTH LIMIT STATE
Section 1-1 (continued)

$$M_u + \frac{1}{3}f_\ell S_{xt} \le f_f M_n \quad \text{Eq. (6.10.7.1.1 - 1)}$$

For STRENGTH I:

$$M_u + \frac{1}{3}f_\ell S_{xt} = 9{,}797 \text{ kip - ft} + 0 = 9{,}797 \text{ kip - ft}$$

$$\phi_f M_n = 1.0(13{,}222) = 13{,}222 \text{ kip - ft}$$

9,797 kip - ft < 13,222 kip - ft ok (Ratio = 0.741)

For STRENGTH III:

$$M_u + \frac{1}{3}f_\ell S_{xt} = 3{,}654 \text{ kip - ft} + \frac{1}{3}\frac{(2.06)(2{,}441)}{12} = 3{,}794 \text{ kip - ft}$$

$$\phi_f M_n = 1.0(13{,}222) = 13{,}222 \text{ kip - ft}$$

3,794 kip - ft < 13,222 kip - ft ok (Ratio = 0.287)

BSDI

SITE BLAUVELT ENGINEERS a TRC company

STRENGTH LIMIT STATE
Section 1-1 (continued)

$$M_u + \frac{1}{3} f_\ell S_{xt} \leq \phi_f M_n \qquad \text{Eq. (6.10.7.1.1 - 1)}$$

For STRENGTH IV:

$$M_u + \frac{1}{3} f_\ell S_{xt} = 4{,}289 \text{ kip - ft} + 0 = 4{,}289 \text{ kip - ft}$$

$$\phi_f M_n = 1.0(13{,}222) = 13{,}222 \text{ kip - ft}$$

$$4{,}289 \text{ kip - ft} < 13{,}222 \text{ kip - ft} \quad \text{ok} \qquad (\text{Ratio} = 0.324)$$

For STRENGTH V:

$$M_u + \frac{1}{3} f_\ell S_{xt} = 8{,}393 \text{ kip - ft} + \frac{1}{3}\frac{(0.587)(2{,}441)}{12} = 8{,}433 \text{ kip - ft}$$

$$\phi_f M_n = 1.0(13{,}222) = 13{,}222 \text{ kip - ft}$$

$$8{,}433 \text{ kip - ft} < 13{,}222 \text{ kip - ft} \quad \text{ok} \qquad (\text{Ratio} = 0.638)$$

BSDI

SITE BLAUVELT ENGINEERS a TRC company

STRENGTH LIMIT STATE
Performance Ratios

POSITIVE-MOMENT REGION, SPAN 1 (Section 1-1)

Strength Limit State (Compact Section)

Ductility requirement	0.343
Flexure – Eq. (6.10.7.1.1-1) (STRENGTH I)	0.741
Flexure – Eq. (6.10.7.1.1-1) (STRENGTH III)	0.287
Flexure – Eq. (6.10.7.1.1-1) (STRENGTH IV)	0.324
Flexure – Eq. (6.10.7.1.1-1) (STRENGTH V)	0.638
Shear (End panel) (STRENGTH I)	0.995

BSDI

SITE BLAUVELT ENGINEERS a TRC company

SHEAR
(Article 6.10.9)

- **Highlights:**
  - Tension-field action extended to interior panels of hybrid sections.
  - Moment-shear interaction equation is eliminated.
  - No handling requirement since D/t_w is limited to 150 for transversely stiffened girders.
  - Shear connector design moved to separate Article 6.10.10.

BSDI

SITE BLAUVELT ENGINEERS a TRC company

SHEAR
End Panels (Article 6.10.9.3.3)

- End panels must satisfy:

$$V_u \leq f_v V_n \qquad \text{Eq. (6.10.9.1-1)}$$

$$V_u = 1.0[1.25(87 + 13) + 1.5(13) + 1.75(139)] = 388 \text{ kips}$$

int. girder at the abutment

$$V_n = V_{cr} = CV_p \qquad \text{Eq. (6.10.9.3.3-1)}$$

$$V_p = 0.58 F_{yw} D t_w = 1{,}001 \text{ kips}$$

C = 0.390 (for 87-inch stiffener spacing < 1.5D = 103.5 in.)

$$V_{cr} = 0.390(1{,}001) = 390 \text{ kips} > V_u = 388 \text{ kips}$$

(Ratio = 0.995)

BSDI

SITE BLAUVELT ENGINEERS a TRC company

SHEAR
Interior Panels (Article 6.10.9.3.2)

- For interior panels of hybrid & nonhybrid members with the section along the entire panel proportioned such that:

$$\frac{2Dt_w}{(b_{fc}t_{fc} + b_{ft}t_{ft})} \leq 2.5 \qquad \text{Eq. (6.10.9.3.2-1)}$$

the nominal shear resistance is to be taken as:

$$V_n = V_p\left[C + \frac{0.87(1 - C)}{\sqrt{1 + \left(\frac{d_o}{D}\right)^2}}\right] \qquad \text{Eq. (6.10.9.3.2-2)}$$

BSDI

SITE BLAUVELT ENGINEERS a TRC company

SHEAR
Interior Panels (continued)

- For interior panels of hybrid and nonhybrid members with the panel proportioned such that:

$$\frac{2Dt_w}{(b_{fc}t_{fc} + b_{ft}t_{ft})} > 2.5 \qquad \text{Eq. (6.10.9.3.2-1)}$$

the nominal shear resistance is to be taken as:

$$V_n = V_p\left[C + \frac{0.87(1 - C)}{\left[\sqrt{1 + \left(\frac{d_o}{D}\right)^2} + \frac{d_o}{D}\right]}\right] \qquad \text{Eq. (6.10.9.3.2-8)}$$

BSDI

SITE BLAUVELT ENGINEERS a TRC company

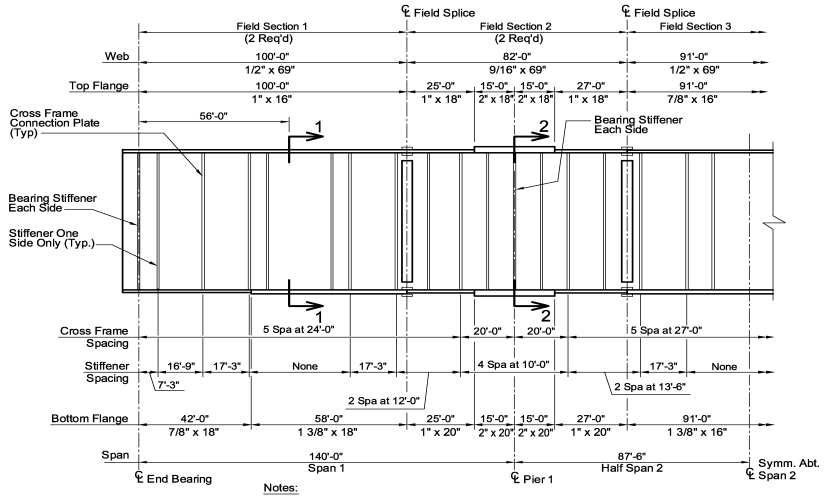

Notes:
1. Total estimated weight of structural steel = 28.9 lbs / sq ft of deck area.
2. Top and bottom flanges in Field Section 2 and 4 are ASTM A 709 Grade HPS 70W steel (all other steel is ASTM A 709 Grade 50W).

BSDI

SITE BLAUVELT ENGINEERS a TRC company

SHEAR
Interior Panels (continued)

- d_o = 16.75 ft = 201.0 in. < 3D = 207.0 in.

$$V_u = 1.0[1.25(74 + 11) + 1.5(11) + 1.75(127)] = 345 \text{ kips}$$

int. girder at 87 in. from abutment

- For an unstiffened web:

$$V_n = V_{cr} = CV_p \qquad \text{Eq. (6.10.9.2-1)}$$

C = 0.239 (calculated w/ k = 5)

$$V_p = 0.58(50)(69.0)(0.5) = 1{,}001 \text{ kips}$$

$$V_n = V_{cr} = 0.239(1{,}001) = 239 \text{ kips}$$

$$f_v V_n = 1.0(239) = 239 \text{ kips} < 345 \text{ kips} \setminus \text{stiffeners are required}$$

BSDI

SITE BLAUVELT ENGINEERS a TRC company

SHEAR
Interior Panels (continued)

- Calculate V_n for the stiffened panel:

$$\frac{2(69.0)(0.5)}{[16(1.0)+18(0.875)]} = 2.17 < 2.5$$

$$k = 5 + \frac{5}{\left(\frac{201.0}{69.0}\right)^2} = 5.59$$

$$1.40\sqrt{\frac{Ek}{F_{yw}}} = 1.40\sqrt{\frac{29{,}000(5.59)}{50}} = 79.7 < \frac{D}{t_w} = \frac{69.0}{0.5} = 138.0$$

BSDI

SITE BLAUVELT ENGINEERS a TRC company

SHEAR
Interior Panels (continued)

- Calculate V_n for the stiffened panel (cont'd):

$$C = \frac{1.57}{\left(\frac{D}{t_w}\right)^2}\left(\frac{Ek}{F_{yw}}\right) \Rightarrow C = \frac{1.57}{(138.0)^2}\left(\frac{29{,}000(5.59)}{50}\right) = 0.267$$

$$V_p = 0.58(50)(69.0)(0.5) = 1{,}001 \text{ kips}$$

$$V_n = 1{,}001\left[0.267 + \frac{0.87(1-0.267)}{\sqrt{1+\left(\frac{201.0}{69.0}\right)^2}}\right] = 475 \text{ kips}$$

$$f_v V_n = 1.0(475) = 475 \text{ kips} > V_u = 345 \text{ kips} \quad \text{ok}$$

BSDI

SITE BLAUVELT ENGINEERS a TRC company

STRENGTH LIMIT STATE
Section 2-2 (Interior Pier)

- Determine if the section is a slender-web section (Article 6.10.6.2.3):

$$\frac{2D_c}{t_w} \leq 5.7\sqrt{\frac{E}{F_{yc}}} \qquad \text{Eq. (6.10.6.2.3-1)}$$

$$5.7\sqrt{\frac{29{,}000}{70}} = 116.0$$

$$\frac{2(36.55)}{0.5625} = 130.0 > 116.0$$

<u>Note</u>: Use D_c of the steel section + long. reinforcement (D6.3.1)

Therefore, the section is a slender-web section.

=> Go to Article 6.10.8

BSDI

SITE BLAUVELT ENGINEERS a TRC company

STRENGTH LIMIT STATE
Section 2-2 (continued)

- Use the provisions of Article 6.10.8.
- For discretely braced compression flanges:

$$f_{bu} + \frac{1}{3}f_{\ell} \leq \phi_f F_{nc} \qquad \text{Eq. (6.10.8.1.1-1)}$$

- For continuously braced flanges:

$$f_{bu} \leq \phi_f R_h F_{yf} \qquad \text{Eq. (6.10.8.1.3-1)}$$

BSDI

SITE BLAUVELT ENGINEERS a TRC company

STRENGTH LIMIT STATE
Section 2-2 (continued)

- **Calculate the maximum flange major-axis flexural stresses at Section 2-2 due to the factored loads under the STRENGTH I load combination:**

Top flange:

$$f = 1.0\left[\frac{1.25(-4{,}840)}{2{,}942} + \frac{1.25(-690)}{3{,}194} + \frac{1.5(-664)}{3{,}194} + \frac{1.75(-4{,}040)}{3{,}703}\right]12 = 54.57\ \text{ksi}$$

Bottom flange:

$$f = 1.0\left[\frac{1.25(-4{,}840)}{3{,}149} + \frac{1.25(-690)}{3{,}208} + \frac{1.5(-664)}{3{,}208} + \frac{1.75(-4{,}040)}{3{,}310}\right]12 = -55.64\ \text{ksi}$$

BSDI

SITE BLAUVELT ENGINEERS a TRC company

STRENGTH LIMIT STATE
Section 2-2 (continued)

- **Calculate the hybrid factor, R_h (Article 6.10.1.10.1):**

$$R_h = \frac{12 + b(3r - r^3)}{12 + 2b} \qquad \text{Eq. (6.10.1.10.1-1)}$$

$$b = \frac{2D_n t_w}{A_{fn}} \qquad \text{Eq. (6.10.1.10.1-2)}$$

$$r = \frac{F_{yw}}{f_n} \le 1.0$$

BSDI

SITE BLAUVELT ENGINEERS a TRC company

STRENGTH LIMIT STATE
Section 2-2 (continued)

- **Calculate** $b = \frac{2D_n t_w}{A_{fn}}$ => $b = \frac{2(36.55)(0.5625)}{40.0} = 1.028$

D_n = larger of the distances from the elastic N.A. of the cross-section to the inside face of either flange

At Section 2-2: $D_n = D_c = 36.55$ in. (steel + reinf.)

A_{fn} = sum of the flange area & the area of any cover plates on the side of the neutral axis corresponding to D_n. For the top flange, can include reinforcement.

At Section 2-2: $A_{fn} = A_{bot\ flg.} = 20(2) = 40.0\ in^2$

B S D I

SITE BLAUVELT ENGINEERS a TRC company

STRENGTH LIMIT STATE
Section 2-2 (continued)

- **Calculate** $r = \frac{F_{yw}}{f_n} \leq 1.0$ => $r = \frac{50.0}{70.0} = 0.714$

f_n = for sections where yielding occurs first in the flange, a cover plate or the longitudinal reinforcement on the side of the N.A. corresponding to D_n, the largest of the specified minimum yield strengths of each component included in the calculation of A_{fn}.

At Section 2-2: $f_n = F_{yc} = 70.0$ ksi

Otherwise, f_n is equal to the largest elastic stress in the component on the side of the N.A. corresponding to D_n at first yield on the opposite side of the N.A.

B S D I

SITE BLAUVELT ENGINEERS a TRC company

STRENGTH LIMIT STATE
Section 2-2 (continued)

- **Calculate R_h:**

$$R_h = \frac{12 + b\left(3r - r^3\right)}{12 + 2b}$$

$$R_h = \frac{12 + 1.028\left[3(0.714) - (0.714)^3\right]}{12 + 2(1.028)} = 0.984$$

BSDI

SITE BLAUVELT ENGINEERS a TRC company

STRENGTH LIMIT STATE
Section 2-2 (continued)

- **Calculate web load-shedding factor, R_b (Article 6.10.1.10.2):**

$$\frac{2D_c}{t_w} = 130.0 > \lambda_{rw} = 5.7\sqrt{\frac{E}{F_{yc}}} = 116.0$$

$$R_b = 1 - \left(\frac{a_{wc}}{1200 + 300a_{wc}}\right)\left(\frac{2D_c}{t_w} - \lambda_{rw}\right) \le 1.0 \qquad \text{Eq. (6.10.1.10.2-3)}$$

$$a_{wc} = \frac{2D_c t_w}{b_{fc} t_{fc}} = \frac{2(36.55)(0.5625)}{20(2)} = 1.028$$

$$R_b = 1 - \left(\frac{1.028}{1200 + 300(1.028)}\right)(130.0 - 116.0) = 0.990$$

BSDI

SITE BLAUVELT ENGINEERS a TRC company

LOCAL BUCKLING RESISTANCE

Bottom Flange - Section 2-2 (Article 6.10.8.2.2)

- **Determine the slenderness ratio of the bottom flange:**

$$\lambda_f = \frac{b_{fc}}{2t_{fc}} = \frac{20}{2(2)} = 5.0$$

$$\lambda_{pf} = 0.38\sqrt{\frac{E}{F_{yc}}} = 0.38\sqrt{\frac{29{,}000}{70}} = 7.73$$

Since $\lambda_f < \lambda_{pf}$: $F_{nc} = R_b R_h F_{yc}$ **Eq. (6.10.8.2.2-1)**

$$F_{nc_{FLB}} = (0.990)(0.984)(70.0) = 68.19 \text{ ksi}$$

BSDI

SITE BLAUVELT ENGINEERS a TRC company

6.10.8 Flexural Resistance - Composite Sections in Negative Flexure & Noncomposite Sections

Basic Form of All FLB & LTB Eqs

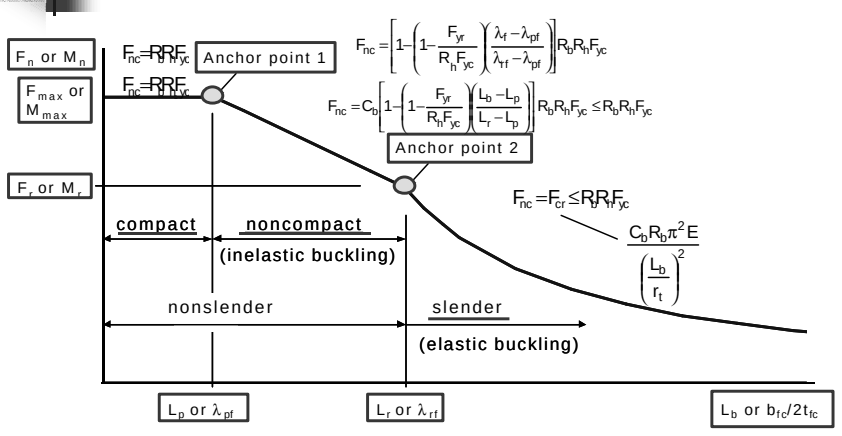

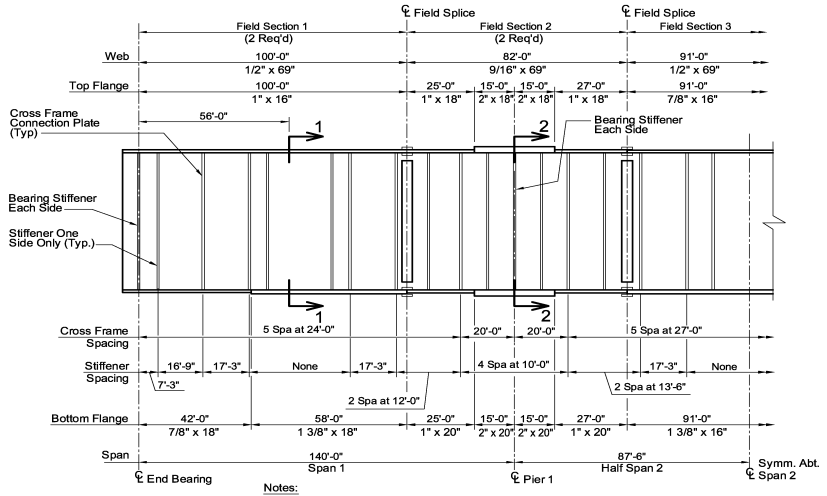

Notes:

1. Total estimated weight of structural steel = 28.9 lbs / sq ft of deck area.
2. Top and bottom flanges in Field Section 2 and 4 are ASTM A 709 Grade HPS 70W steel (all other steel is ASTM A 709 Grade 50W).

BSDI

SITE BLAUVELT ENGINEERS a TRC company

LATERAL TORSIONAL BUCKLING RESISTANCE (Article 6.10.8.2.3)

- **From Article 6.10.8.2.3:**

  "For unbraced lengths containing a transition to a smaller section at a distance less than or equal to 20 percent of the unbraced length from the brace point with the smaller moment, the lateral torsional buckling resistance may be determined assuming the transition to the smaller section does not exist."

Assume L_b = 17¢-0²

$$\frac{(17.0 - 15.0)}{17.0} = 12\% < 20\%$$

BSDI

SITE BLAUVELT ENGINEERS a TRC company

LATERAL TORSIONAL BUCKLING RESISTANCE (continued)

- Determine the limiting unbraced length, L_p:

$$L_p = 1.0 r_t \sqrt{\frac{E}{F_{yc}}}$$

Eq. (6.10.8.2.3-4)

where: $$r_t = \frac{b_{fc}}{\sqrt{12\left(1 + \frac{1}{3}\frac{D_c t_w}{b_{fc} t_{fc}}\right)}}$$

$$r_t = \frac{20}{\sqrt{12\left(1 + \frac{1}{3}\frac{36.55(0.5625)}{20(2)}\right)}} = 5.33 \text{ in.}$$

Therefore: $$L_p = \frac{1.0(5.33)}{12}\sqrt{\frac{29{,}000}{70}} = 9.04 \text{ ft}$$

BSDI

SITE BLAUVELT ENGINEERS a TRC company

LATERAL TORSIONAL BUCKLING RESISTANCE (continued)

- Determine the limiting unbraced length, L_r:

$$L_r = \pi r_t \sqrt{\frac{E}{F_{yr}}}$$

Eq. (6.10.8.2.3-5)

where: $F_{yr} = 0.7F_{yc} \leq F_{yw}$

$F_{yr} = 0.7(70) = 49.0 \text{ ksi} < 50 \text{ ksi}$ ($\geq 0.5F_{yc} = 35$ ksi ok)

Therefore: $$L_r = \frac{\pi(5.33)}{12}\sqrt{\frac{29{,}000}{49.0}} = 33.95 \text{ ft}$$

BSDI

SITE BLAUVELT ENGINEERS a TRC company

LATERAL TORSIONAL BUCKLING RESISTANCE (continued)

- **Determine the moment gradient modifier, C_b:**

For unbraced cantilevers & members where $f_{mid}/f_2 > 1.0$ or $f_2 = 0$:

$$C_b = 1.0 \qquad \text{Eq. (6.10.8.2.3-6)}$$

Otherwise:

$$C_b = 1.75 - 1.05\left(\frac{f_1}{f_2}\right) + 0.3\left(\frac{f_1}{f_2}\right)^2 \leq 2.3 \qquad \text{Eq. (6.10.8.2.3-7)}$$

$$f_1 = 2f_{mid} - f_2 \geq f_o \qquad \text{Eq. (6.10.8.2.3-10)}$$

BSDI

SITE BLAUVELT ENGINEERS a TRC company

Examples:

$$f_1 = 2f_{mid} - f_2 \geq f_o$$

When $f_{mid} < (f_o+f_2)/2$, $f_1 = f_o$

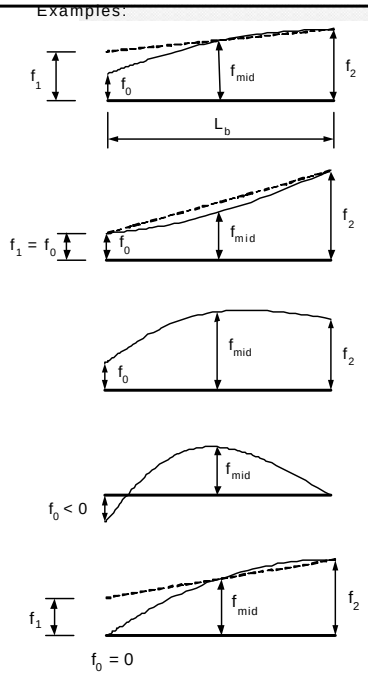

$f_{mid}/f_2 = 0.875$
$f_1/f_2 = 0.75$
$C_b = 1.13$

$f_1/f_2 = 0.375$
$C_b = 1.40$

$f_{mid} > f_2$
$C_b = 1$

$f_2 = 0$
$C_b = 1$

$f_{mid}/f_2 = 0.75$
$f_1/f_2 = 0.5$
$C_b = 1.3$

BSDI

SITE BLAUVELT ENGINEERS a TRC company

LATERAL TORSIONAL BUCKLING RESISTANCE (continued)

- Since the moment diagram in this region is concave in shape, $f_1 = f_o$ (therefore, do not need to compute f_{mid}). For STRENGTH I:

Bottom flange:

$$f_1 = f_o = 1.0\left[\frac{1.25(-2{,}390)}{3{,}149} + \frac{1.25(-334)}{3{,}208} + \frac{1.5(-321)}{3{,}208} + \frac{1.75(-2{,}615)}{3{,}310}\right]12 = 31.34 \text{ ksi}$$

$$C_b = 1.75 - 1.05\left(\frac{31.34}{55.64}\right) + 0.3\left(\frac{31.34}{55.64}\right)^2 = 1.25 < 2.3$$

Note: f_o is positive for compression. f_2 is always positive.

BSDI

SITE BLAUVELT ENGINEERS a TRC company

LATERAL TORSIONAL BUCKLING RESISTANCE (continued)

- Since $L_p = 9.04$ ft $< L_b = 17.0$ ft $< L_r = 33.95$ ft:

$$F_{nc} = C_b\left[1 - \left(1 - \frac{F_{yr}}{R_h F_{yc}}\right)\left(\frac{L_b - L_p}{L_r - L_p}\right)\right]R_b R_h F_{yc} \le R_b R_h F_{yc}$$

Eq. (6.10.8.2.3-2)

$$F_{nc} = 1.25\left[1 - \left(1 - \frac{49.0}{0.984(70)}\right)\left(\frac{17.0 - 9.04}{33.95 - 9.04}\right)\right](0.990)(0.984)(70) = 77.38 \text{ ksi}$$

$$> 0.990(0.984)(70) = 68.19 \text{ ksi}$$

Therefore: $F_{nc_{LTB}} = 68.19$ ksi ($= F_{nc_{FLB}} = 68.19$ ksi)

BSDI

$\therefore F_{nc} = 68.19$ ksi

SITE BLAUVELT ENGINEERS a TRC company

6.10.8 Flexural Resistance - Composite Sections in Negative Flexure & Noncomposite Sections

Basic Form of All FLB & LTB Eqs

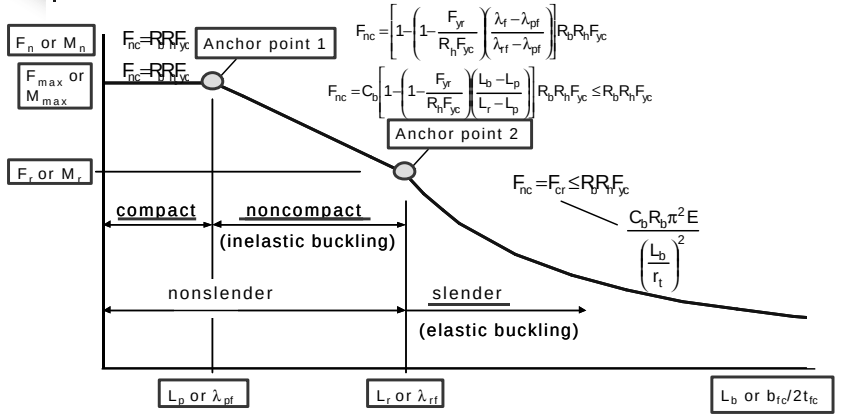

LATERAL TORSIONAL BUCKLING RESISTANCE (continued)

- **Assume L_b = 20¢-0²** $\frac{(20.0 - 15.0)}{20.0} = 25\% > 20\%$
- **From Article C6.10.8.2.3:**

  "For unbraced lengths containing a transition to a smaller section at a distance greater than 20 percent of the unbraced length from the brace point with the smaller moment, the lateral torsional buckling resistance should be taken as the smallest resistance, F_{nc}, within the unbraced length under consideration. This resistance is to be compared to the largest value of the compressive stress, f_{bu}, throughout the unbraced length calculated using the actual properties of the section. The moment gradient modifier, C_b, should be taken equal to 1.0 in this case..."

BSDI

SITE BLAUVELT ENGINEERS a TRC company

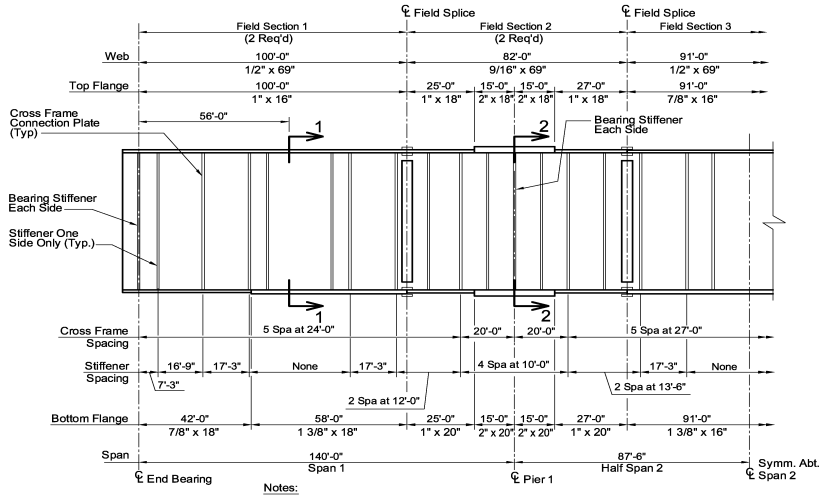

Notes:
1. Total estimated weight of structural steel = 28.9 lbs / sq ft of deck area.
2. Top and bottom flanges in Field Section 2 and 4 are ASTM A 709 Grade HPS 70W steel (all other steel is ASTM A 709 Grade 50W).

BSDI

SITE BLAUVELT ENGINEERS a TRC company

LATERAL TORSIONAL BUCKLING RESISTANCE (continued)

- **For the smaller section at the flange transition in the first unbraced length adjacent to the interior pier:**

$$r_t = 4.95 \text{ in.}$$
$$L_p = 8.40 \text{ ft}$$
$$L_r = 31.53 \text{ ft}$$
$$R_h = 0.971$$
$$R_b = 0.977$$

- **Set $C_b = 1.0$.**

BSDI

SITE BLAUVELT ENGINEERS a TRC company

LATERAL TORSIONAL BUCKLING RESISTANCE (continued)

- Since $L_p = 8.40$ ft < $L_b = 20.0$ ft < $L_r = 31.53$ ft:

$$F_{nc} = C_b\left[1 - \left(1 - \frac{F_{yr}}{R_h F_{yc}}\right)\left(\frac{L_b - L_p}{L_r - L_p}\right)\right]R_b R_h F_{yc} \le R_b R_h F_{yc}$$

Eq. (6.10.8.2.3-2)

$$F_{nc} = 1.0\left[1 - \left(1 - \frac{49.0}{0.971(70)}\right)\left(\frac{20.0 - 8.40}{31.53 - 8.40}\right)\right](0.977)(0.971)(70) = 57.11\text{ ksi}$$

$$< 0.977(0.971)(70) = 66.41\text{ ksi}$$

Therefore: $F_{nc_{LTB}} = 57.11$ ksi

BSDI

SITE BLAUVELT ENGINEERS a TRC company

LATERAL TORSIONAL BUCKLING RESISTANCE (continued)

- For $L_b = 17'\text{-}0''$:

  Flange transition < 20% of unbraced length from the brace point with the smaller moment

  $F_{nc_{LTB}} = 68.19$ ksi

- For $L_b = 20'\text{-}0''$:

  Flange transition > 20% of unbraced length from the brace point with the smaller moment

  $F_{nc_{LTB}} = 57.11$ ksi

- From Appendix C to the Design Example:

  $F_{nc_{LTB_{2\text{-}2}}} = 61.14$ ksi $\quad F_{nc_{LTB_{tr}}} = 60.48$ ksi

BSDI

SITE BLAUVELT ENGINEERS a TRC company

LOCAL BUCKLING RESISTANCE

Bottom-Flange Transition (Article 6.10.8.2.2)

- **Determine the slenderness ratio of the bottom flange:**

$$\lambda_f = \frac{b_{fc}}{2t_{fc}} = \frac{20}{2(1)} = 10.0 > \lambda_{pf} = 0.38\sqrt{\frac{E}{F_{yc}}} = 7.73$$

$$\lambda_{rf} = 0.56\sqrt{\frac{E}{F_{yr}}} \qquad \text{Eq. (6.10.8.2.2-5)}$$

$$F_{yr} = 0.7F_{yc} \le F_{yw}$$

$F_{yr} = 0.7(70) = 49.0$ ksi $<$ 50 ksi ($\ge 0.5F_{yc} = 35$ ksi ok)

Therefore: $\lambda_{rf} = 0.56\sqrt{\frac{29{,}000}{49.0}} = 13.62$

BSDI

SITE BLAUVELT ENGINEERS a TRC company

LOCAL BUCKLING RESISTANCE

Bottom-Flange Transition (continued)

- **Since $\lambda_{pf} = 7.73 < \lambda_f = 10.0 < \lambda_{rf} = 13.62$:**

$$F_{nc} = \left[1 - \left(1 - \frac{F_{yr}}{R_h F_{yc}}\right)\left(\frac{\lambda_f - \lambda_{pf}}{\lambda_{rf} - \lambda_{pf}}\right)\right] R_b R_h F_{yc}$$

Eq. (6.10.8.2.2-2)

$$F_{nc} = \left[1 - \left(1 - \frac{49.0}{0.971(70.0)}\right)\left(\frac{10.0 - 7.73}{13.62 - 7.73}\right)\right](0.977)(0.971)(70.0) = 59.26 \text{ ksi}$$

Therefore: $F_{nc_{FLB}} = 59.26$ ksi ($> F_{nc_{LTB}} = 57.11$ ksi)

BSDI

$\therefore$ $F_{nc} = F_{nc_{LTB}} = 57.11$ ksi

SITE BLAUVELT ENGINEERS a TRC company

6.10.8 Flexural Resistance - Composite Sections in Negative Flexure & Noncomposite Sections

Basic Form of All FLB & LTB Eqs

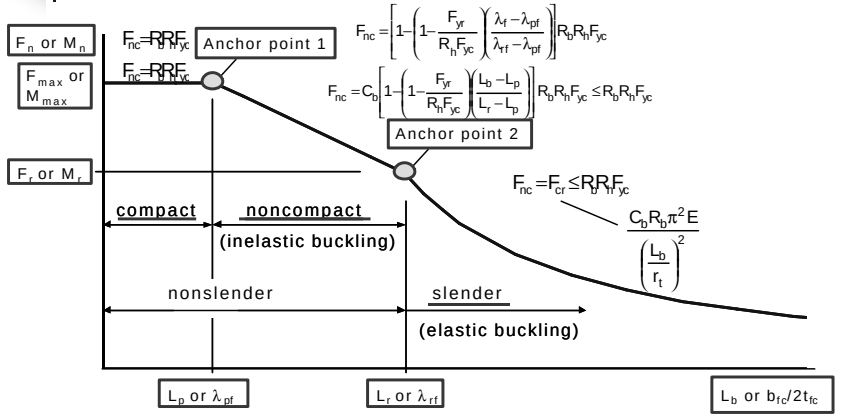

STRENGTH LIMIT STATE
Section 2-2 - (continued)

- **For STRENGTH I:**

Section 2-2: Top Flange: f_{bu} = 54.57 ksi
Bottom Flange: f = -55.64 ksi

Flange Transition (Span 1):

Top Flange:

$$f_{bu} = 1.0\left[\frac{1.25(-2{,}656)}{1{,}700} + \frac{1.25(-373)}{1{,}945} + \frac{1.5(-358)}{1{,}945} + \frac{1.75(-2{,}709)}{2{,}448}\right]12 = 52.86 \text{ ksi}$$

Bottom Flange:

$$f = 1.0\left[\frac{1.25(-2{,}656)}{1{,}789} + \frac{1.25(-373)}{1{,}862} + \frac{1.5(-358)}{1{,}862} + \frac{1.75(-2{,}709)}{1{,}975}\right]12 = -57.54 \text{ ksi}$$

\ f_{bu} (bot. flange) = -57.54 ksi

BSDI

SITE BLAUVELT ENGINEERS a TRC company

STRENGTH LIMIT STATE
Section 2-2 - Bottom Flange

- **For STRENGTH I:**

$$f_{bu} + \frac{1}{3} f_{\ell} \leq \phi_f F_{nc} \qquad \text{Eq. (6.10.8.1.1-1)}$$

$$f_{bu} + \frac{1}{3} f_{\ell} = |-57.54| \text{ ksi} + 0 = 57.54 \text{ ksi}$$

$$\phi_f F_{nc} = 1.0(57.11) = 57.11 \text{ ksi}$$

$$57.54 \text{ ksi} > 57.11 \text{ ksi} \quad \text{say ok} \quad (\text{Ratio} = 1.008)$$

BSDI

SITE BLAUVELT ENGINEERS a TRC company

STRENGTH LIMIT STATE
Section 2-2 - Top Flange

- **For STRENGTH I:**

$$f_{bu} \leq \phi_f R_h F_{yf} \qquad \text{Eq. (6.10.8.1.3-1)}$$

Section 2-2:

$$f_{bu} = 54.57 \text{ ksi}$$

$$\phi_f R_h F_{yf} = 1.0(0.984)(70.00) = 68.88 \text{ ksi}$$

$$54.57 \text{ ksi} < 68.88 \text{ ksi} \quad \text{ok} \qquad (\text{Ratio} = 0.792)$$

Flange transition:

$$f_{bu} = 52.86 \text{ ksi}$$

$$\phi_f R_h F_{yf} = 1.0(0.971)(70.00) = 67.97 \text{ ksi}$$

$$52.86 \text{ ksi} < 67.97 \text{ ksi} \quad \text{ok} \qquad (\text{Ratio} = 0.778)$$

BSDI

SITE BLAUVELT ENGINEERS a TRC company

STRENGTH LIMIT STATE
Performance Ratios (continued)

INTERIOR-PIER SECTION (Section 2-2)

Strength Limit State (Slender-web section)

Flexure (STRENGTH I)	
Eq. (6.10.8.1.1-1) – Bottom flange	1.008
Eq. (6.10.8.1.3-1) – Top flange @ Section 2-2	0.792
Eq. (6.10.8.1.3-1) – Top flange @ Flange transition	0.778
Flexure (STRENGTH III)	
Eq. (6.10.8.1.1-1) – Bottom flange	0.536
Eq. (6.10.8.1.3-1) – Top flange @ Section 2-2	0.460
Eq. (6.10.8.1.3-1) – Top flange @ Flange transition	0.445
Flexure (STRENGTH IV)	
Eq. (6.10.8.1.1-1) – Bottom flange	0.617
Eq. (6.10.8.1.3-1) – Top flange @ Section 2-2	0.541
Eq. (6.10.8.1.3-1) – Top flange @ Flange transition	0.524
Flexure (STRENGTH V)	
Eq. (6.10.8.1.1-1) – Bottom flange	0.896
Eq. (6.10.8.1.3-1) – Top flange @ Section 2-2	0.716
Eq. (6.10.8.1.3-1) – Top flange @ Flange transition	0.700

BSDI

SITE BLAUVELT ENGINEERS a TRC company

OTHER TOPICS COVERED

- Spacing of Transverse Stiffeners
- Shear Connector Design
- Transverse Intermediate Stiffener Design
- Bearing Stiffener Design
- Appendix A - Elastic Effective Length Factor for Lateral Torsional Bucking
- Appendix B - Moment Gradient Modifier, C_b (Example cases)
- Appendix C - Lateral Torsional Buckling Resistance of Stepped Flanges

BSDI

SITE BLAUVELT ENGINEERS a TRC company

QUESTIONS

Michael A. Grubb, P.E.
BSDI, Ltd.
724-709-8349
m.grubb@comcast.net

B S D I

SITE BLAUVELT ENGINEERS
a TRC company