TABLE OF CONTENTS – CONCRETE DECK SLAB

CHAPTER 10

FILE NO.	TITLE	DATE
	TABLE OF CONTENTS AND INTRODUCTION	
10.TOC-1	Table of Contents - Chapter 10	10Mar2015
10.TOC-2	Table of Contents - Chapter 10	01Jul2011
10.00-1	Introduction - Chapter 10	10Mar2015
	DECK SLAB DESIGN – LRFD	
10.01-1	General	10Mar2015
10.01-2	Part Transverse Sections	10Mar2015
10.01-3	Part Transverse Sections	10Mar2015
10.01-4	Deck Slab Design Table	10Mar2015
10.01-5	Cantilever Design	10Mar2015
10.01-6	Cantilever Design	10Mar2015
10.01-7	Sample Design Calculations	10Mar2015
10.01-8	Sample Design Calculations	10Mar2015
10.01-9	Sample Design Calculations	10Mar2015
10.01-10	Sample Design Calculations	10Mar2015
10.01-11	Sample Design Calculations	10Mar2015
10.01-12	Sample Design Calculations	10Mar2015
10.01-13	Maximum Live Load Moment Table	10Mar2015
	DECK SLAB DETAILS	
10.02-1	Concrete Bolster (Haunch) Detail	14Dec2012
10.02-2	Continuous Deck Slab Retrofitting Existing Bridge Detail	16Jan2014
	DECK SLAB CONCRETE PLACEMENT	
10.03-1	Concrete Placement Schedule - Steel	16Jan2014
10.03-2	Concrete Placement Schedule – Prestressed	16Jan2014
	DECK SLAB ELEVATIONS	
10.04-1	Deck Slab Elevation Layout Notes	17Dec2008
10.04-2	Sample Computations	17Dec2008

* Indicates 11 x 17 sheet; all others are 8½ x 11.

TABLE OF CONTENTS – CONCRETE DECK SLAB

CHAPTER 10

	FILE NO.	TITLE	DATE
		SAMPLE PLAN SHEETS	
	10.05-1	General Information	17Dec2008
*	10.05-2	Sample Plan Sheet – Deck Plan - Skew angle 0° to 20°	17Dec2008
*	10.05-3	Sample Plan Sheet – Deck Plan - Skew angle over 20°	17Dec2008
*	10.05-4	Sample Plan Sheet – Deck Plan - Curved Bridge	17Dec2008
	10.05-5	Check List – Deck Plan	17Dec2008

* Indicates 11 x 17 sheet; all others are 8½ x 11.

INTRODUCTION

It is the intent of this chapter to establish the practices and specific requirements of the Structure and Bridge Division for the design and detailing of concrete deck slabs. It will also provide design aids and other sources of information along with cross references to other parts of this manual to assist in the design and preparation of plans.

References to LRFD Design Specifications refer to the current AASHTO *LRFD Bridge Design Specifications*, Interims, and VDOT Modifications (current IIM-S&B-80). References to standard specifications in this chapter refer to the AASHTO *Standard Specifications for Highway Bridges*, 1996 including the 1997 and 1998 Interims and VDOT Modifications.

The practices and requirements set forth herein are intended to supplement or clarify the requirements of the AASHTO specifications and to provide additional information to assist the designer. In the event of conflict(s) between the practices and requirements set forth herein and those contained in the AASHTO specifications, the more stringent requirements shall govern.

It is expected that the users of this chapter will adhere to the practices and requirements stated herein.

Several major changes and/or additions to the past office practice (Part 2) are as follows:

1. Changed deck slab reinforcing steel dimensioning from centerline of bars to clearance of bars. Changed top layer from 2 ¾" to center of bar to 2 ½" clear and bottom layer from 1 ½" to center of bar to 1 ¼" clear to coincide with VDOT *Road and Bridge Specifications*.

2. Revised cantilever design requirements.

NOTE:
Due to various restrictions on placing files in this manual onto the Internet, portions of the drawings shown do not necessarily reflect the correct line weights, line types, fonts, arrowheads, etc. Wherever discrepancies occur, the written text shall take precedence over any of the drawn views.

General:

A. Concrete deck slabs on bridges designed in accordance with AASHTO LRFD for HL-93 loading. Design shall be in accordance with LRFD Sections 3, 4, 5, 9, 13, and VDOT Modifications. The empirical design method shall not be used.

   Main reinforcement may be designed by use of the tables on File No. 10.01-4. This table is based on the requirements of LRFD Design Specifications and a ratio of $A'_s/A_s = 0.5$. A set of example calculations is provided for a slab design and cantilever design in File Nos. 10.01-7 thru 10.01-10.

   Distribution steel is to be designed in accordance with LRFD Article 9.7.3.2 and office modifications. A set of example calculations is provided in File Nos. 10.01-11 thru 10.01-12.

B. Unless circumstances require other thicknesses, the following shall be used for deck slabs supported by stringers, according to the c-c stringer spacings shown:

Minimum Slab Thickness	Spacing of Stringers	
	Steel	Concrete
7 $^1/_2$”	6’-0” or less	6’-9” or less
8”	over 6’-0” to 7’-0”	over 6’-9” to 7’-9”
8 $^1/_2$”	over 7’-0” to 10’-0”	over 7’-9” to 10’-0”
9”	over 10’-0” to 12’-0”	over 10’-0” to 12’-0”

C. Main reinforcing bars shall be detailed as follows for the usual simple spans (long spans, non-parallel beams/girders, etc. may require deviation from this) LRFD Article 9.7.1.3:

   1. For skew angles from 0° to 20°, main reinforcement shall be placed parallel to ends of slab(s) with truss-type slab bars alternating with straight bars top and bottom.

   2. For skews over 20°, all main reinforcement shall be placed perpendicular to centerline of bridge. Main reinforcement in the end sections shall be detailed as straight bars top and bottom. Section of slab requiring full-length main bars shall be detailed with truss-type bars alternating with straight bars top and bottom. Consideration should be given to reinforcing the ends of the slab by placing additional slab bars in the vicinity of and parallel to end diaphragms.

   3. Main reinforcement bars shall be #5, distribution bars shall be #4, and reinforcing bars in negative moment regions over piers shall typically not be greater than a #6 bar.

   4. Longitudinal bars may be detailed using a series of 40’ bars with one bar at the end to make up the remaining length.

D. For deck slabs cast in a single pour wider than 60’ to 80’, a longitudinal or construction joint should be considered. For deck slabs cast in a single pour wider then 80’, a longitudinal joint shall be provided.

E. Deck reinforcement shall typically be detailed as straight bars without hooks unless there is insufficient length for development (top bars only).

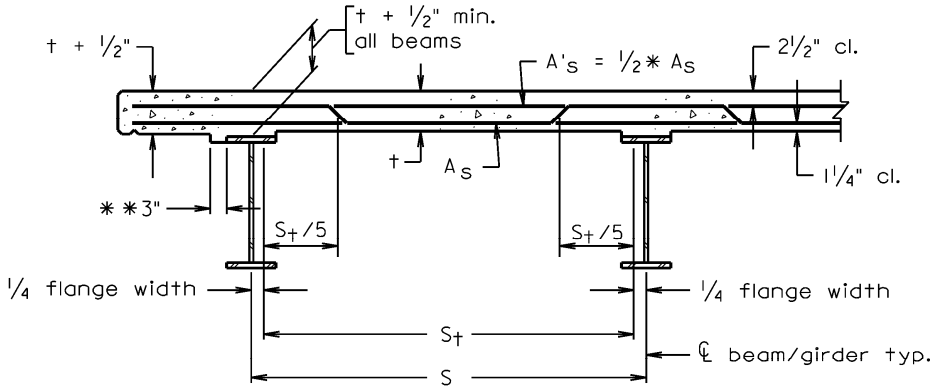

STEEL ROLLED BEAM OR PLATE GIRDER

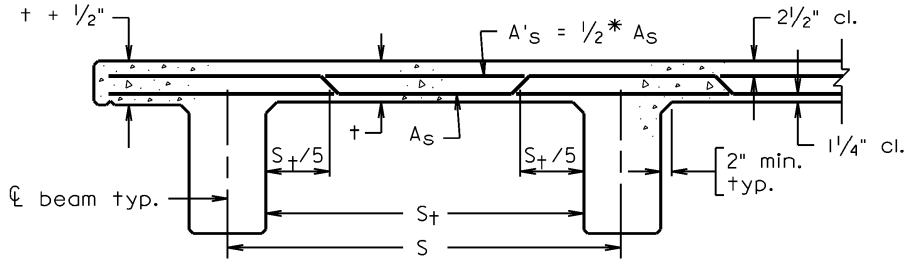

CONCRETE T-BEAM

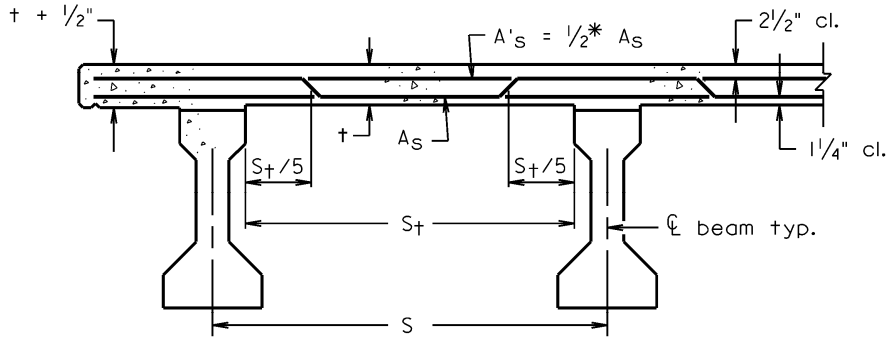

AASHTO PRESTRESSED BEAM - TYPE II, III, AND IV

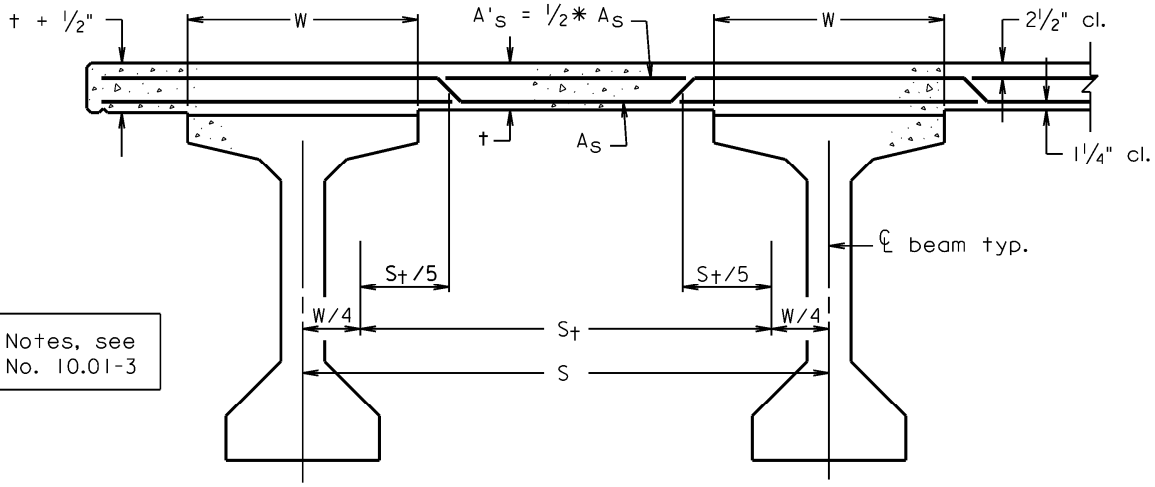

For Notes, see
File No. 10.01-3

AASHTO PRESTRESSED BEAM - TYPE V AND VI

CONCRETE DECK SLAB **DECK SLAB DESIGN – LRFD** **PART TRANSVERSE SECTIONS**	VOL. V - PART 2 DATE: 10Mar2015 SHEET 2 of 13 FILE NO. 10.01-2

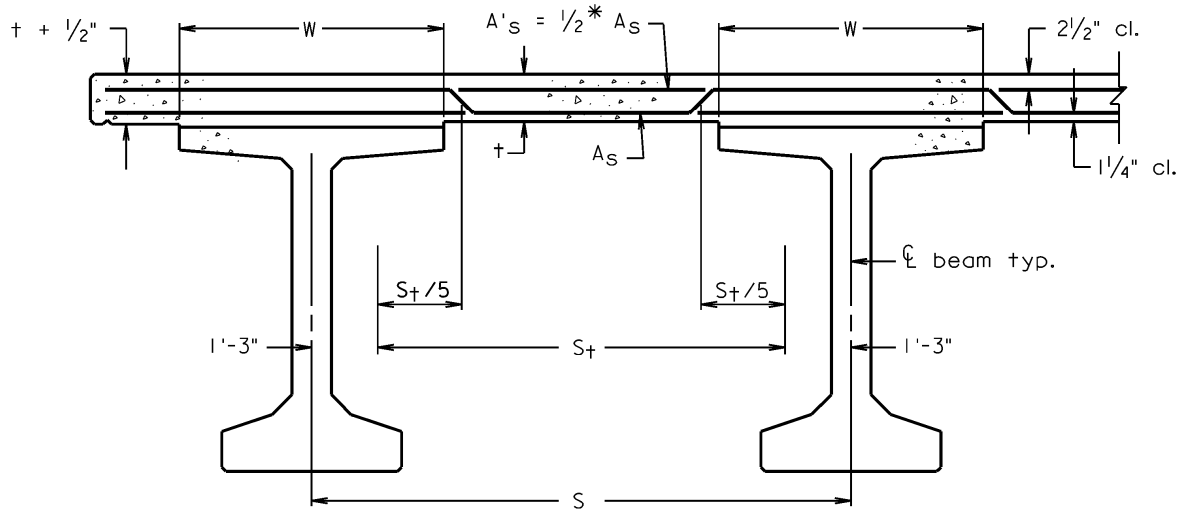

PRESTRESSED BULB-T

Notes:

S = span Length to be used in Deck Design Table File No. 10.01-4.

S_t= span length to determine geometry of truss bar.

t includes 1/2" monolithic wearing surface

Dimensions are to centers of bars.

* Normally - see Note C, File No. 10.01-1, for other requirements.

** Outside of fascia of steel beams/girders and at outside of steel beams/girders each side of an open joint.

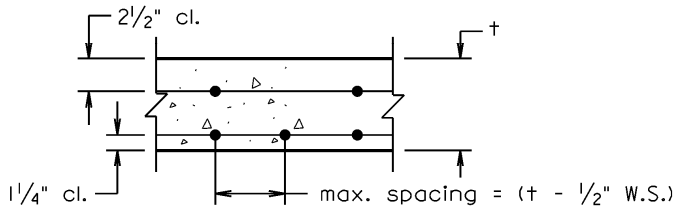

LONGITUDINAL SECTION TAKEN BETWEEN STRINGERS

Longitudinal bars not shown for clarity

DECK DESIGN TABLE

Span Length (S) (ft.)	Reinforcement Steel Required					
	Steel Beams/Girders			Prestressed Conc. Beams		
	Deck Thickness (t) (in.)	Area (in.^{2})	Bar Spacing	Deck Thickness (t) (in.)	Area (in.^{2})	Bar Spacing
4.00	7 $^1/_2$"	0.53	#5 @ 7" *	7 $^1/_2$"	0.53	#5 @ 7" *
4.25		0.53	#5 @ 7" *		0.53	#5 @ 7" *
4.50		0.53	#5 @ 7" *		0.53	#5 @ 7" *
4.75		0.53	#5 @ 7" *		0.53	#5 @ 7" *
5.00		0.53	#5 @ 7" *		0.53	#5 @ 7" *
5.25		0.53	#5 @ 7" *		0.53	#5 @ 7" *
5.50		0.53	#5 @ 7" *		0.53	#5 @ 7" *
5.75		0.53	#5 @ 7" *		0.53	# 5 @ 7" *
6.00		0.53	#5 @ 7" *		0.53	#5 @ 7" *
6.25	8"	0.50	#5 @ 7 $^1/_2$" *		0.53	#5 @ 7" *
6.50		0.50	#5 @ 7 $^1/_2$" *		0.53	#5 @ 7" *
6.75		0.50	#5 @ 7 $^1/_2$" *		0.53	#5 @ 7" *
7.00		0.50	#5 @ 7 $^1/_2$" *	8"	0.50	#5 @ 7 $^1/_2$" *
7.25	8 $^1/_2$"	0.47	#5 @ 8 " *		0.50	#5 @ 7 $^1/_2$" *
7.50		0.47	# 5@ 8 " *		0.50	#5 @ 7 $^1/_2$" *
7.75		0.47	#5 @ 8" *		0.50	#5 @ 7 $^1/_2$" *
8.00		0.47	#5 @ 8" *	8 $^1/_2$"	0.47	#5 @ 8" *
8.25		0.47	#5 @ 8" *		0.47	#5 @ 8" *
8.50		0.47	#5 @ 8" *		0.47	#5 @ 8" *
8.75		0.50	#5 @ 7 $^1/_2$"		0.47	#5 @ 8" *
9.00		0.50	#5 @ 7 $^1/_2$"		0.47	#5 @ 8" *
9.25		0.50	#5 @ 7 $^1/_2$"		0.47	#5 @ 8" *
9.50		0.53	#5 @ 6 $^1/_2$"		0.47	#5 @ 8" *
9.75		0.57	#5 @ 6 $^1/_2$"		0.50	#5 @ 7 $^1/_2$"
10.00		0.62	#5 @ 6"		0.50	#5 @ 7 $^1/_2$"
10.25	9"	0.57	#5 @ 6 $^1/_2$"	9"	0.47	#5 @ 8"
10.50		0.62	#5 @ 6"		0.50	#5 @ 7 $^1/_2$"
10.75		0.62	# 5 @ 6"		0.50	#5 @ 7 $^1/_2$"
11.00		0.68	#5 @ 5 $^1/_2$"		0.53	#5 @ 7"
11.25		0.68	#5 @ 5 $^1/_2$"		0.53	#5 @ 7"
11.50		0.68	#5 @ 5"		0.53	#5 @ 7"
11.75		0.74	#5 @ 5"		0.57	#5 @ 6 $^1/_2$"
12.00		0.74	#5 @ 5"		0.57	# 5 @ 6 $^1/_2$"

Design assumptions:

1. S (Span Length) = center-to-center stringer/girder spacing.
2. Values given in the design table are based on the equivalent strip method. The crack control criterion has been neglected in the design.
3. Design is applicable for decks supported on at least three stringers and having a width of not less than 14 feet between centerlines of exterior stringers.
4. For steel beams/girders, a minimum top flange width of 12 inches is assumed.

* Design controlled by maximum spacing requirement per VDOT Modifications to LRFD.

CANTILEVER DESIGN

The cantilever deck slab shall be designed/detailed with additional #5 bars between the transverse bars in the top layer. This is the minimum requirement of reinforcement with or without additional analysis. The bars shall extend past the exterior beam/girder with the development length extending past the contraflexure point in the slab.

Yield-line analysis will not be required if all four of the following requirements are met:

beam/girder spacing is less than or equal to 12'-0"

cantilever length is less than or equal to 0.3 x beam/girder spacing

railing/parapet type (if any on the cantilever) is an approved VDOT crash tested system.

additional loads (i.e., soundwall, utilities, etc.) are not added to the cantilever except for fencing as shown in BPF-series standards.

For all other cases, the cantilever deck slab shall be designed in accordance with the AASHTO LRFD A13.4 with the revisions described herein.

For Design Case 1, the deck overhang supporting concrete parapet railings shall be designed to resist the combined effects of tensile force *T* and moment M_s, and other applicable forces at the inside face of the parapet or the gutter line, as specified as follows.

For an interior parapet segment:

$$T = \frac{1.2F_t}{L_t + 2H} \qquad M_s = \frac{1.2F_t H}{L_t + 2H}$$

For an end parapet segment:

$$T = \frac{1.2F_t}{L_t + H} \qquad M_s = \frac{1.2F_t H}{L_t + H}$$

F_t = transverse force specified in Table A13.2-1 (kips) of AASHTO LRFD

L_t = longitudinal length of distribution of impact force F_t (ft)

H = height of wall (ft)

T = tensile force per unit of deck length (kip/ft)

M_s = design moment in the in the deck overhang due to F_t (kip-ft/ft), not greater than 110% of the average of M_c of the bridge railing/parapet, M_{c_ave}

M_c = resistance of the parapet about an axis parallel to the longitudinal axis of the bridge (kip-ft/ft)

CANTILEVER DESIGN (Cont.'d)

The following design values may be used to design the deck overhang.

Railing Type (Test Level)	T (kip/ft)		M_{c_ave} (kip-ft/ft)		M_s (kip-ft/ft)	
	Interior	End	Interior	End	Interior	End
32" F-shape (TL-4)	7.3	10.5	12.5	12.5	13.8	13.8
42" F-shape (TL-5)	10.0	13.0	21.6	21.6	23.8	23.8
BR27C (TL-4)	8.6	11.8	13.7	13.7	13.7	13.7
BR27D (TL-4)	10.0	13.0	13.7	13.7	13.7	13.7

At other sections in the deck overhang, at some distance from the parapet, the value of T and M_s per unit length may be decreased by spreading them at an angle of 30°.

For the VDOT approved Kansas Corral rails, the deck overhang may be designed with the method described above when the Kansas Corral rails are used for TL-2 situation. A more rigorous analysis is needed for the Kansas Corral rail which is used for TL-4 situation.

For the deck supporting Post-and-Beam railings, the deck overhang shall be designed in accordance with the AASHTO LRFD A13.4.3.

Designer shall consider additional loads on the cantilever or blister. Examples include fencing, soundwall attachments, supports for sign structures, etc.

Required:
Deck reinforcement for a steel plate girder.

Design Specifications:
AASHTO LRFD Bridge Design Specifications with current Interims and VDOT Modifications.

Data Provided:

Girder spacing	= 10 feet
t	= 8.5 inches
f_c'	= 4 ksi
f_s	= 60 ksi
E_{st}	= 29,000 ksi
Future W.S.	= 15 psf
Min. top flange	= 12 inches

Dead Loads:

$$M = \frac{(w)(S)^2}{10}$$

$$w_{deck} = \frac{(8.5")}{12} \times 0.150 \text{ kcf} = 0.106 \text{ klf}$$

$$w_{w.s.} = 1 \text{ foot x } 0.015 \text{ ksf} = 0.015 \text{ klf}$$

$$M_{deck} = \frac{(0.106)(10.0)^2}{10} = 1.06 \text{ k-ft/ft}$$

$$M_{w.s.} = \frac{(0.015)(10.0)^2}{10} = 0.15 \text{ k-ft/ft}$$

(Assume these moments act for both positive and negative dead load moments.)

Live Loads:

Use Design Table A4-1 LRFD Specifications to compute moments based on interpolation.
(The table has been reproduced on File No. 10.01-13)

Positive Moment:

S = 10 feet , ∴ Positive moment = 6.89 k-ft/ft

Negative Moment:

Distance from ℄ girder to design section = flange width/4 = 12/4 = 3 inches

∴ Negative moment = 6.99 k-ft/ft

Factored Moments:

Factored moment $= \sum \eta_i \gamma_i M_i$

Strength I, factored moment = 1.25 (DC) + 1.5 (DW) + 1.75 (LL+IM)

η_i = Load modifier = 1.0
γ_i = Load factor = 1.0
DC = Dead load of structural components and nonstructural attachments
DW = Dead load of wearing surface and utilities
LL+IM= Vehicular live load and vehicular dynamic load allowance

Maximum factored (+) moment:

M(+) = 1.25(1.06) + 1.5(0.15) + 1.75(6.89) = 13.6 k-ft/ft

Maximum factored (-) moment:

M(-) = 1.25(1.06) + 1.5(0.15) + 1.75(6.99) = 13.8 k-ft/ft

Design for negative flexure in deck:

Design as singly reinforced section and ignore compression steel.

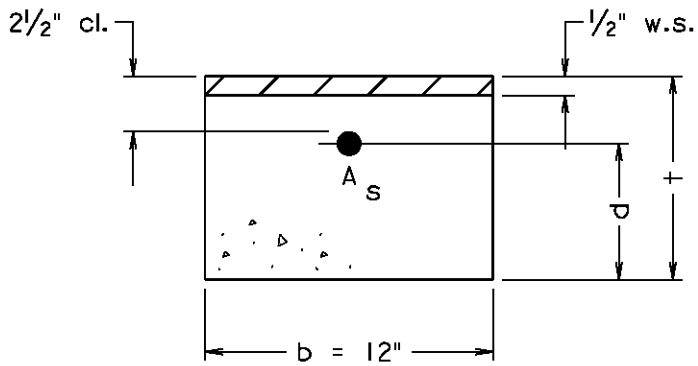

$M_n = A_s f_s (d - a/2)$
$a = (A_s f_s) / (0.85 f_c' b)$

Try #5 with 6 inch spacing

A_s = 0.62 in^2/ft.
b = 12 inches
d = t – cover of top bar = 8.5 – 2.5 – (0.625/2) = 5.6875 inches

$$a = \frac{(0.62 \times 60)}{0.85 \times 4 \times 12} = 0.91 \text{ in.}$$

Design for negative flexure in deck (cont'd):

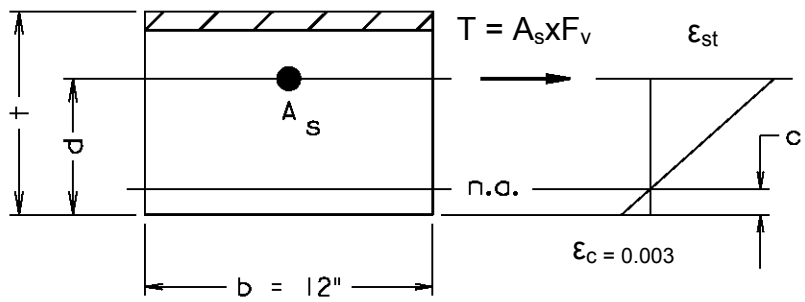

$c = a/\beta_1$

$\beta_1 = 0.85$ for $f'_c = 4$ ksi

$c = 0.91/0.85 = 1.07$ in.

$c/d = 1.07/5.6875 = 0.188 < 0.6$ ∴ OK, strain compatibility check not required, but provided below as an example.

$\varepsilon_{st} = \varepsilon_c (d-c)/c$

$= 0.003 (5.6875-1.07)/1.07 = 0.01295$ in/in

$E_{st} \times \varepsilon_{st} = 29{,}000 \times 0.01295 = 376$ ksi > 60 ksi

$M_n = 0.62 \times 60 (5.6875 - 0.91/2)/12 = 16.2$ k-ft/ft

$\Phi M_n = 0.90 \times 16.2 = 14.6$ k-ft/ft > 13.8 k-ft/ft ∴ OK

∴ #5 @ 6" spacing is OK.

Design for positive flexure in deck:

Design as singly reinforced section and ignore compression steel.

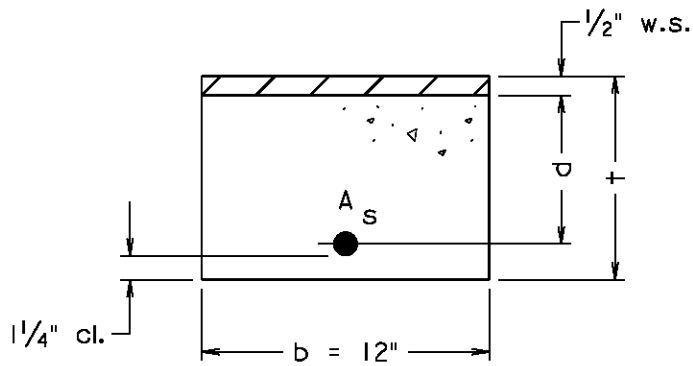

$M_n = A_s f_s (d - a/2)$
$a = (A_s f_s) / (0.85 f_c' b)$

Try #5 with 6 inch spacing

$A_s = 0.62 \text{ in}^2/\text{ft.}$
b = 12 inches
d = t – wearing surface - cover of bottom bar = 8.5 – 0.5 – 1.25 – (0.625/2) = 6.4375 inches

$$a = \frac{(0.62 \times 60)}{0.85 \times 4 \times 12} = 0.91 \text{ in.}$$

$c = a/\beta_1$

$\beta_1 = 0.85$ for $f'_c = 4$ ksi

c = 0.91/0.85 = 1.07 in.

c/d = 1.07/6.4375 = 0.166 < 0.6 ∴ OK, Strain compatibility check not required.

M_n = 0.62 x 60 (6.4375 – 0.91/2)/12 = 18.5 k-ft/ft

ΦM_n = 0.90 x 18.5 = 16.6 k-ft/ft > 13.6 k-ft/ft ∴ OK

∴ #5 @ 6" spacing is OK.

After the spacing is determined for negative and positive flexure, the smaller spacing shall be used for the transverse reinforcement.

Design distribution reinforcement:

For effective length, use S = 10'-0". Neglect the small deduction in span for the thickness of the web in steel beams. For prestressed beams, subtract the thickness of the web to determine the effective length.

Compute percentage of distribution reinforcement required:

% longitudinal steel required = $220 / \sqrt{S}$ = $220 / \sqrt{10}$ = 70 % > 67 % ∴ Use 67 %

Steel for long. reinforcement = 0.67 x 0.62 = 0.415 in^2/ft for bottom layer in positive moment area

= 0.5 x 0.415 = 0.208 in^2/ft for all other areas

Total long. reinf. in bottom of truss = 0.6 x (10 – 0.5) x 0.415 = 2.37 sq. in.

bars = 2.37 / 0.2 = 12 # 4 bars

Spacing = 0.6 x 9.5 / (12-1) = 0.518 ft. = 6.21"

Spacing everywhere else = 2 x 6.21" = 12.42" or 12 $^1/_2$"

The following PART SECTION shows the typical steel required:

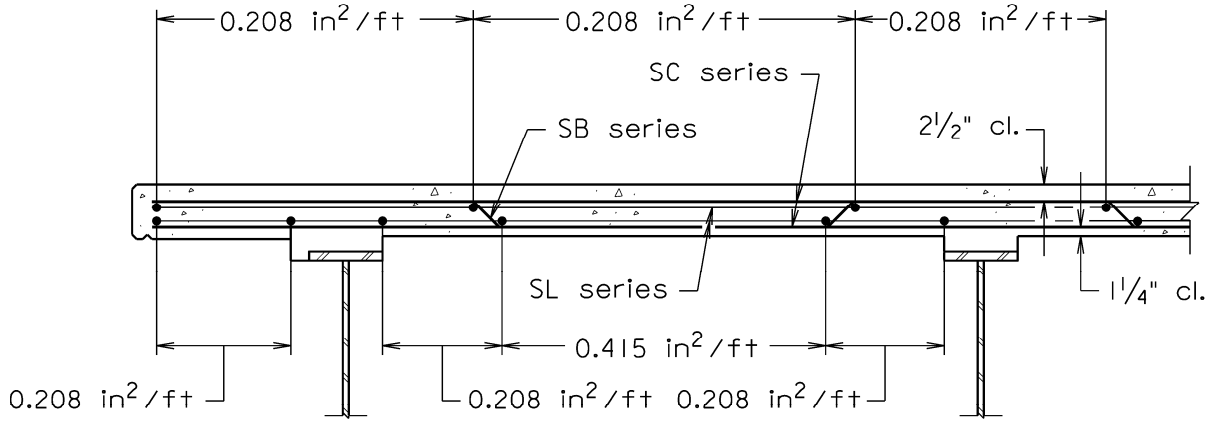

PART SECTION - STEEL REQUIRED

The following typical PART SECTION is shown in the contract plans:

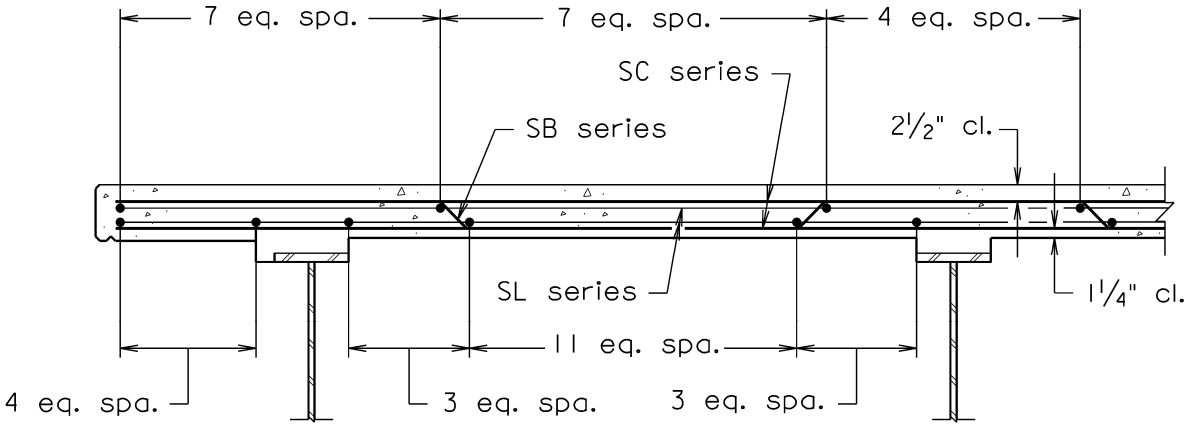

PART SECTION

(Part Section for beams/girders with truss bar shown.
Reinforcement for slabs without truss bars similar.)

MAXIMUM LIVE LOAD MOMENT TABLE

S (ft.)	Positive Moment (k-ft/ft)	Negative Moment (k-ft/ft)						
		Distance from centerline stringer/girder to design section						
		0 in.	3 in.	6 in.	9 in.	12 in.	18 in.	24 in.
4.00	4.68	2.68	2.07	1.74	1.60	1.50	1.34	1.25
4.25	4.66	2.73	2.25	1.95	1.74	1.57	1.33	1.20
4.50	4.63	3.00	2.58	2.19	1.90	1.65	1.32	1.18
4.75	4.64	3.38	2.90	2.43	2.07	1.74	1.29	1.20
5.00	4.65	3.74	3.20	2.66	2.24	1.83	1.26	1.12
5.25	4.67	4.06	3.47	2.89	2.41	1.95	1.28	0.98
5.50	4.71	4.36	3.73	3.11	2.58	2.07	1.30	0.99
5.75	4.77	4.63	3.97	3.31	2.73	2.19	1.32	1.02
6.00	4.83	4.88	4.19	3.50	2.88	2.31	1.39	1.07
6.25	4.91	5.10	4.39	3.68	3.02	2.42	1.45	1.13
6.50	5.00	5.31	4.57	3.84	3.15	2.53	1.50	1.20
6.75	5.10	5.50	4.74	3.99	3.27	2.64	1.58	1.28
7.00	5.21	5.98	5.17	4.36	3.56	2.84	1.63	1.37
7.25	5.32	6.13	5.31	4.49	3.68	2.96	1.65	1.51
7.50	5.44	6.26	5.43	4.61	3.78	3.15	1.88	1.72
7.75	5.56	6.38	5.54	4.71	3.88	3.30	2.21	1.94
8.00	5.69	6.48	5.65	4.81	3.98	3.43	2.49	2.16
8.25	5.83	6.58	5.74	4.90	4.06	3.53	2.74	2.37
8.50	5.99	6.66	5.82	4.98	4.14	3.61	2.96	2.58
8.75	6.14	6.74	5.90	5.06	4.22	3.67	3.15	2.79
9.00	6.29	6.81	5.97	5.13	4.28	3.71	3.31	3.00
9.25	6.44	6.87	6.03	5.19	4.40	3.82	3.47	3.20
9.50	6.59	7.15	6.31	5.46	4.66	4.04	3.68	3.39
9.75	6.74	7.51	6.65	5.80	4.94	4.21	3.89	3.58
10.00	6.89	7.85	6.99	6.13	5.26	4.41	4.09	3.77
10.25	7.03	8.19	7.32	6.45	5.58	4.71	4.29	3.96
10.50	7.17	8.52	7.64	6.77	5.89	5.02	4.48	4.15
10.75	7.32	8.83	7.95	7.08	6.20	5.32	4.68	4.34
11.00	7.46	9.14	8.26	7.38	6.50	5.62	4.86	4.52
11.25	7.60	9.44	8.55	7.67	6.79	5.91	5.04	4.70
11.50	7.74	9.72	8.84	7.96	7.07	6.19	5.22	4.87
11.75	7.88	10.01	9.12	8.24	7.36	6.47	5.40	5.05
12.00	8.01	10.28	9.40	8.51	7.63	6.74	5.56	5.21

Data taken from LRFD Design Specifications, Section 4, Appendix A4, Table A4-1 "Maximum Live Load Moments Per Unit Width, k-ft/ft".

NOTE: Values in table include multiple presence factors and dynamic load allowance.

GENERAL INFORMATION:

This section of the chapter establishes the general practices and requirements regarding the detailing of concrete deck slabs.

The items in blocks are for the designer's information only and are not to be placed on the plans. See Introduction File No. 10.00-1.

CONCRETE BOLSTER (HAUNCH) DETAIL:

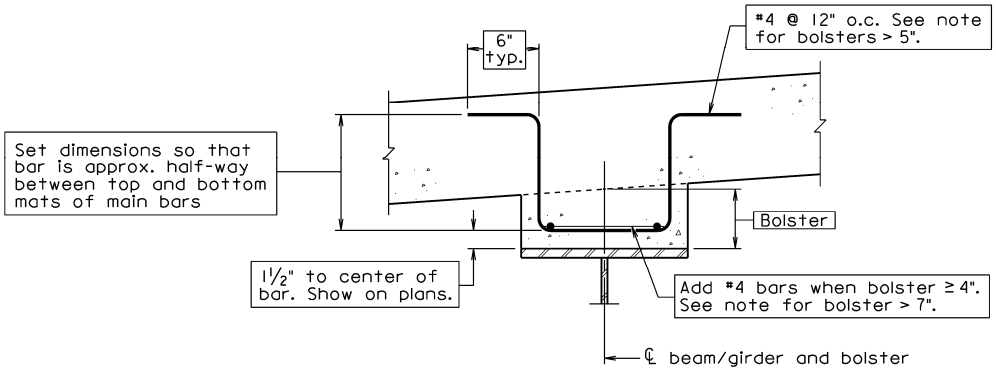

CONCRETE BOLSTER (HAUNCH) DETAIL

All bolsters (haunches) for concrete deck slabs on concrete or steel stringers in excess of 4" in height shall be reinforced.

All bolsters greater than 7" may require additional reinforcement and larger size(s) of bars. Recommend spacing the U-stirrup bars for larger bolsters with the same spacing as the transverse reinforcement.

CONTINUOUS DECK SLAB RETROFITTING EXISTING BRIDGE DETAIL:

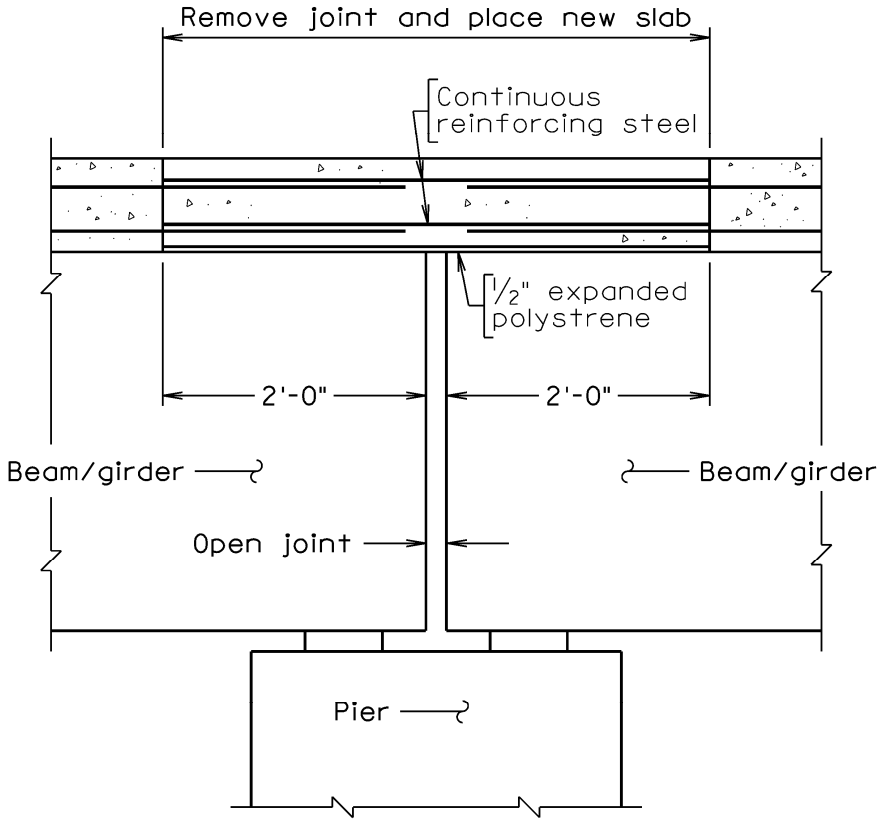

CONTINUOUS SLAB RETROFIT DETAIL

Notes to Designer:

For existing simple span bridges which need retrofitting due to joint leakage, the joints may be eliminated and the slab made continuous as shown in the above detail.

The above detail may only be used for short to medium spans (up to 100 feet). It is important to ensure that one or both of the adjacent bearings supporting the beams/girders at the joint are capable of allowing horizontal movement.

Flexure cracks in the deck slab are to be expected at the pier; however, the problems associated with these cracks are much less than the problems resulting from leaking joints.

For further details, see Integral Bridges in Transportation Research Record 1275.

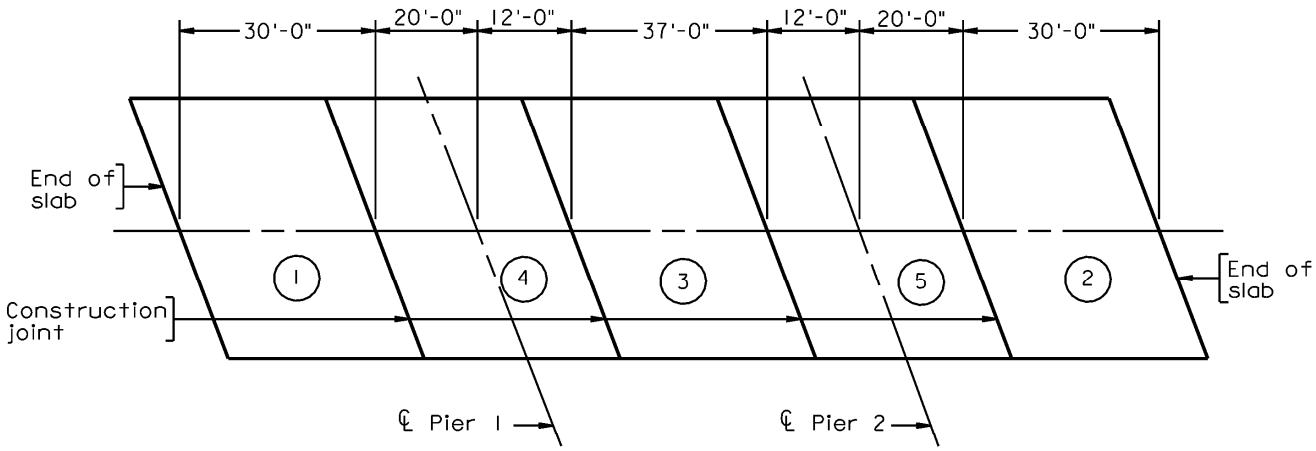

Note: The numbers shown indicate the order of concrete placement in deck sections.
Plan may be reversed end-for end if desired.

DECK SLAB CONCRETE PLACEMENT SCHEDULE
Not to scale

NOTES TO DESIGNER:

1. DECK SLAB CONCRETE PLACEMENT SCHEDULE shall be placed on plans for all continuous steel beam or girder spans with concrete decks.

2. Locate construction joints near points of contraflexure and show dimensions to indicate joints.

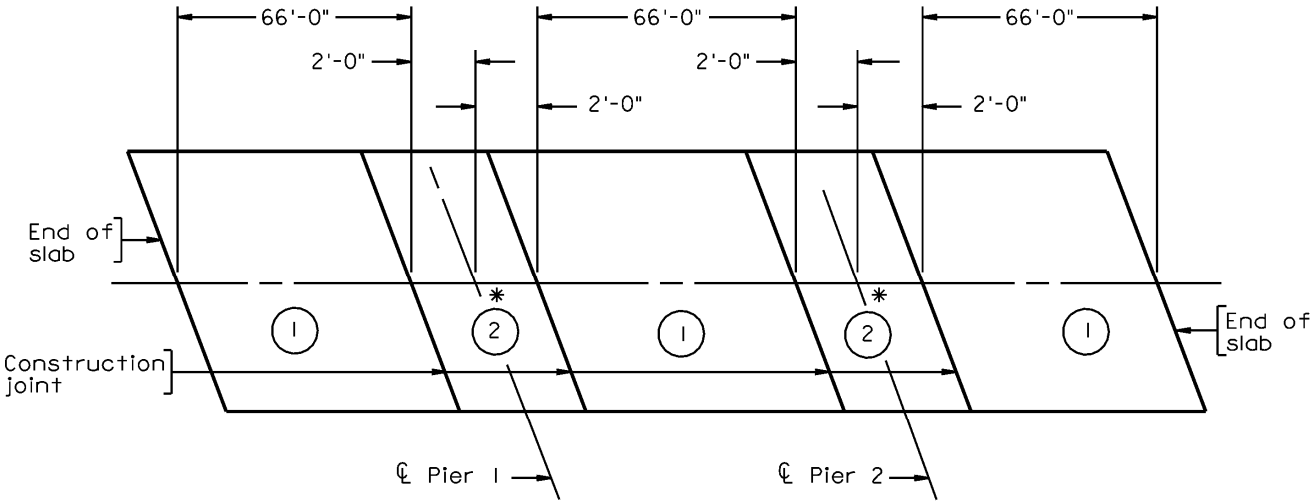

Notes: Sections (1) may be placed in any order or simultaneously.

Sections (2) shall be placed after adjacent sections (1) .

* Closure diaphragm and portion of deck slab above shall be cast together without a construction joint. For closure diaphragm details, see sheet .

DECK SLAB CONCRETE PLACEMENT SCHEDULE
Not to scale

NOTES TO DESIGNER:

1. DECK SLAB CONCRETE PLACEMENT SCHEDULE shall be placed on plans for all continuous prestressed beam spans with concrete decks.

2. Locate construction joints for closure pours as shown and show dimensions.

CONCRETE DECK SLAB **DECK SLAB CONCRETE PLACEMENT** **CONCRETE PLACEMENT SCHEDULE – PRESTRESSED**	VOL. V - PART 2 DATE: 16Jan2014 SHEET 2 of 2 FILE NO. 10.03-2

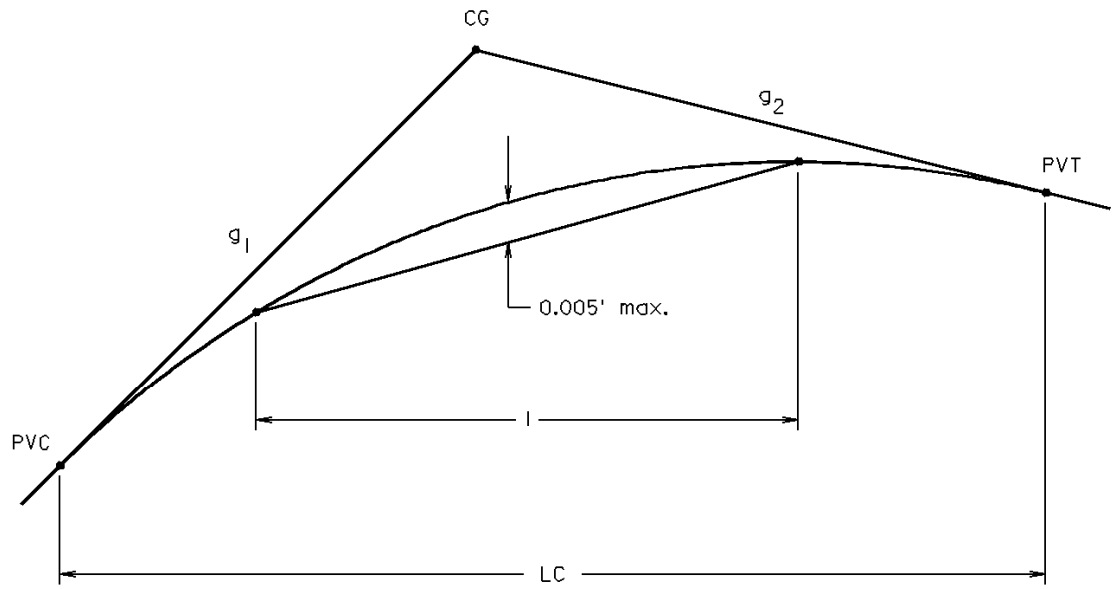

$M = ABS\ (g_2 - g_1)/LC$

g_1, g_2 = Approach tangential gradient, %

LC = Vertical curve length, feet

Notes to designer:

The following two notes shall be added to the table of elevations in the plan assembly:

Slab elevations as shown (in tables below) are on top of finished roadway at faces of curbs (and median); those shown on _____ centerline are at point of finished grade denoted on Transverse Section(s).

Points along faces of curbs (and median) are aligned (radially)(_____) with points on centerline unless otherwise shown. Straight line interpolations for intermediate elevations on top of finished roadway may be made, in any direction, between any two (adjacent) points located opposite centerline stations at not more than ___*___ foot intervals.

* This maximum interval, l, between stations is the smaller of the two limitations, that of vertical curvature or that of horizontal curvature.

For vertical curvature, the limiting interval is $\frac{0.2}{\sqrt{M}}$.

For horizontal curvature, the limiting interval is $0.2\sqrt{\frac{R}{e}}$ where R is the radius of centerline curvature in feet and e is the lateral superelevation rate.

CONCRETE DECK SLAB **DECK SLAB ELEVATIONS** **DECK SLAB ELEVATION LAYOUT NOTES**	VOL. V - PART 2 DATE: 17Dec2008 SHEET 1 of 2 FILE NO. 10.04-1

EXAMPLE

Given:

g_1 = -2.65 %
g_2 = -1.56 %
LC = 400 feet
R = 5000 feet
e = 2.00 %

Determine maximum interval based on vertical curvature:

$$M = \frac{ABS(g_2 - g_1)}{LC} = \frac{ABS(-0.0156 - (-0.0265))}{400} = 0.00002725$$

$$l = \frac{0.2}{\sqrt{M}} = \frac{0.2}{\sqrt{0.00002725}} = 38.35 \text{ feet}$$

Determine maximum interval based on horizontal curvature:

$$l = 0.2\sqrt{\frac{R}{e}} = 0.2\sqrt{\frac{5000}{0.02}} = 100 \text{ feet}$$

$\therefore$ Maximum interval is 38.35 feet.

GENERAL INFORMATION:

This section of the chapter includes deck plan sheets with a checklist for completing them.

A typical project will normally have a single deck plan sheet. Space permitting, other details pertaining to the deck may be shown on this sheet. In all cases, the deck plan sheet shall contain all of the items shown in this section. Information placed in blocks on the sample deck plan sheets is for designer's information only and is not to be placed on the deck plan sheet.

For major projects or long structures, the deck plan sheet may have to be extended to additional sheets to adequately show the complete structure.

While previously, it was recommended that for repetitive spans only one deck plan needed to be drawn for a typical unit. This practice is no longer recommended. All spans should be drawn to simplify possible field revisions.

Deck plan sheet shall provide the following information: plan of the deck slab showing dimensions and reinforcement, end bolster details if needed, pouring sequence, deck slab elevations, and corner details if needed. If not shown on the deck plan sheet, these details may be shown on additional sheets.

FHWA REGION	STATE	FEDERAL AID ROUTE	FEDERAL AID PROJECT	STATE ROUTE	STATE PROJECT	SHEET NO.
3	VA.	—		601	0601-058-P39, B634	12

(13)

Notes:

Deck slab elevations are on top of finished roadway at face of curbs. Those shown on ℄ Rte. 601 are at point of finished grade denoted on Transverse Section.

Straight line interpolation for intermediate elevations on top of finished roadway may be made in any direction between any two adjacent points.

For spacing of SL0401 and SL0402 bars, see sheet 7.

For parapet details, see sheet 13.

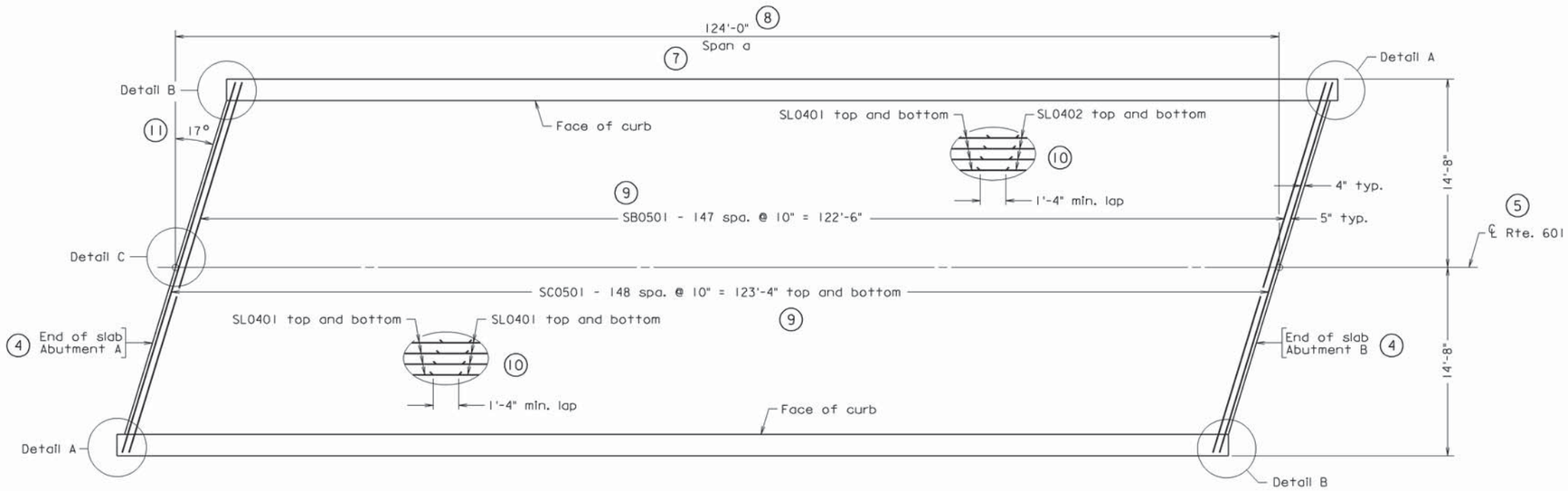

DECK SLAB PLAN

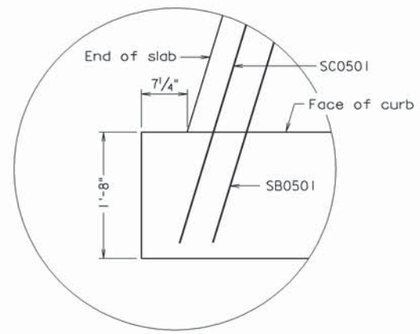

(2) DETAIL A

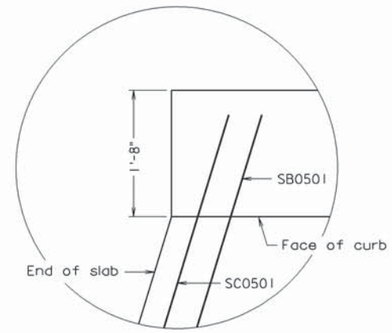

(2) DETAIL B

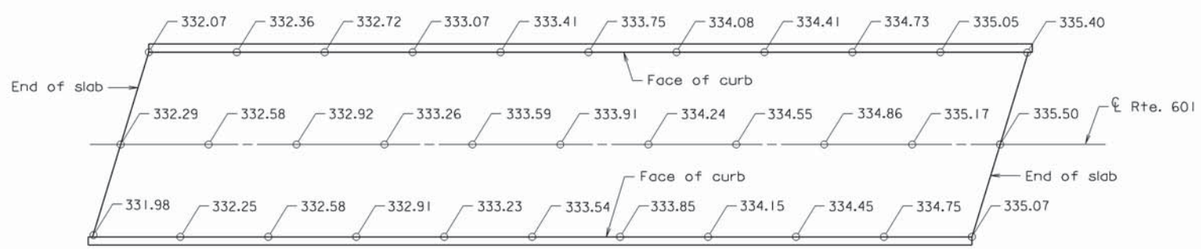

DECK SLAB ELEVATIONS
10 equal spaces

(12)

DECK SLAB PLAN
SKEW ANGLE LESS THAN 20°
INTEGRAL BRIDGE SHOWN OTHER TYPES OF BRIDGES SIMILIAR

(14)

b28200012

(1)
Not to scale

©2008, Commonwealth of Virginia

No.	Description	Date

Revisions

COMMONWEALTH OF VIRGINIA
DEPARTMENT OF TRANSPORTATION

STRUCTURE AND BRIDGE DIVISION

DECK SLAB PLAN
DECK SLAB ELEVATIONS

Designed:	Date	Plan
Drawn:	Sept. 2008	999
Checked:		

VOL. V - PART 2
DATE: 17Dec2008
SHEET 2 of 5
FILE NO. 10.05-2

FHWA REGION	STATE	FEDERAL AID ROUTE	FEDERAL AID PROJECT	STATE ROUTE	STATE PROJECT	SHEET NO.
3	VA.	—		15	0015-058-V06, B602	16

(13)

Notes:

For spacing of SL reinforcing bars, see sheet 6.

For parapet details, see sheet 14.

For Sidewalk details, see sheet 17.

* Typical between beams at ends

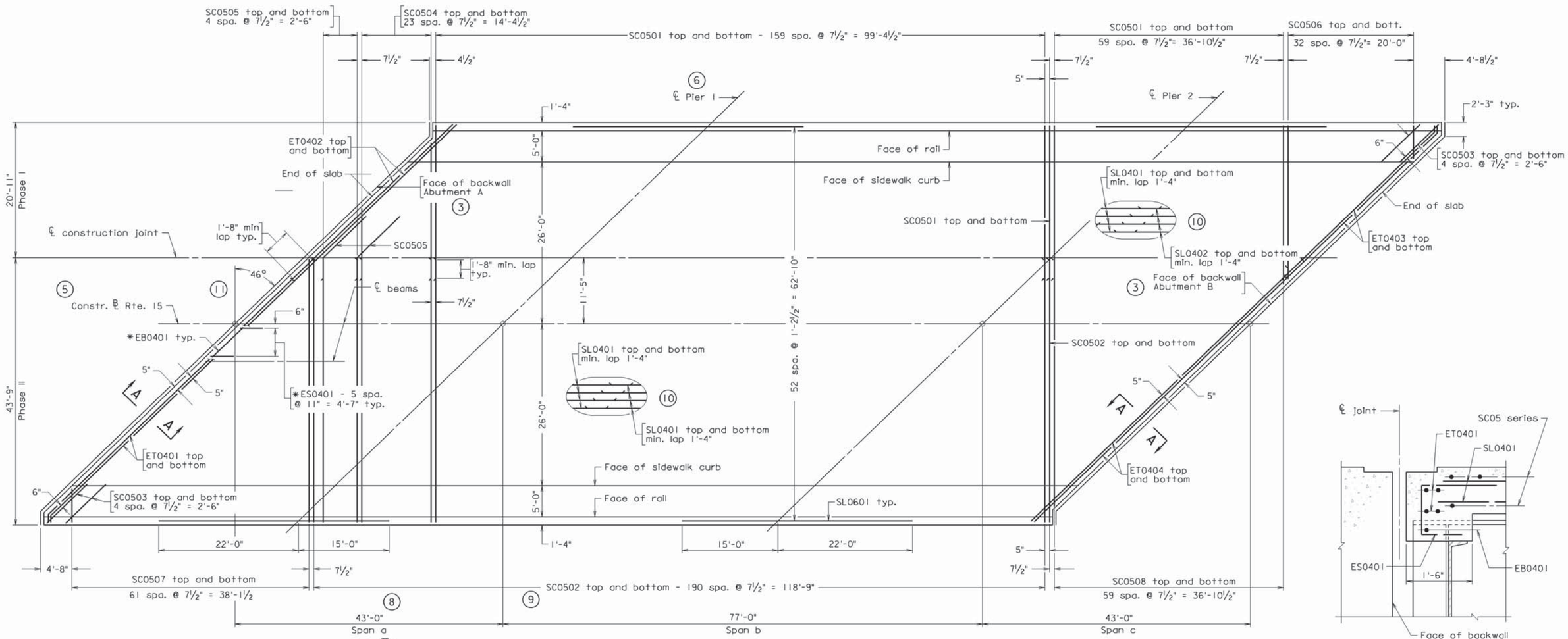

DECK SLAB PLAN

SECTION A-A (2)

(12)

(14)

DECK SLAB PLAN
SKEW ANGLE GREATER THAN 20°
MULTI-SPAN BRIDGE SHOWN OTHER TYPES OF BRIDGES SIMILIAR

(1)

Not to scale

©2008, Commonwealth of Virginia

No.	Description	Date
	Revisions	

COMMONWEALTH OF VIRGINIA
DEPARTMENT OF TRANSPORTATION

STRUCTURE AND BRIDGE DIVISION

DECK SLAB PLAN

Designed: ..... Date
Drawn: ..... March 2008
Checked: ..... Plan 999

VOL. V - PART 2
DATE: 17Dec2008
SHEET 3 of 5
FILE NO. 10.05-3

b27405016

FHWA REGION	STATE	FEDERAL AID ROUTE	FEDERAL AID PROJECT	STATE ROUTE	STATE PROJECT	SHEET NO.
3	VA.	—		652	0652-083-315, B635	14

(13)

Notes:

SC and SB bars shall be radial. SL bars shall be parallel to the girders.

For spacing of SL04 bars, see PART SECTION on sheet 13.

For parapet details, see sheet 20.

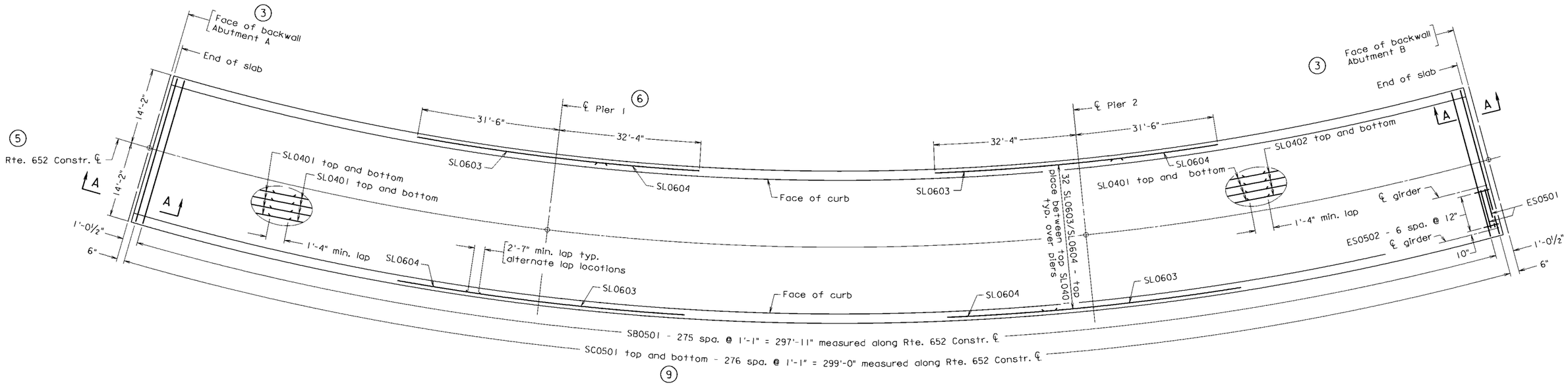

DECK SLAB PLAN

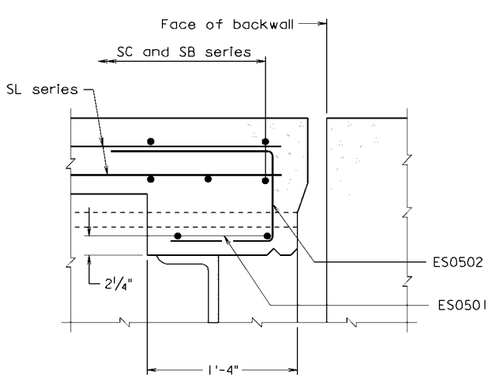

SECTION A-A (2)

Typical between girders at abutments.

(14)

DECK SLAB PLAN
SAMPLE CURVED DECK PLAN

(1)

Not to scale

©2008, Commonwealth of Virginia

(12)

No.	Description	Date

Revisions

COMMONWEALTH OF VIRGINIA
DEPARTMENT OF TRANSPORTATION

STRUCTURE AND BRIDGE DIVISION

DECK SLAB PLAN

Designed: MMA
Drawn: MMA
Checked: BGS

Date: Jan. 2007

Plan: 999

VOL. V - PART 2
DATE: 17Dec2008
SHEET 4 of 5
FILE NO. 10.05-4

b27c27014

CHECK LIST FOR DECK PLAN SHEET:

1. Deck plans shall be drawn to a scale of sufficient size to fit the full size sheet and still be legible when reduced to half-size. It is typical for the final drawing to be shown not to scale due to the fact that the scale needs to be exaggerated for the end of slab bars.

2. Show additional details if needed. Corner details, end diaphragm. etc. Deck slab elevations and pouring sequence may be shown on the DECK PLAN sheet or on a separate sheet.

3. For non-integral abutments, show and label:

   Face of backwall
   Abutment A or Abutment B

4. For full and semi-integral abutments, show and label:

   End of slab
   Abutment A (or B)

5. Show and label ℄ / ℄ of bridge. This designation shall match that shown on the title sheet. Do not include the word proposed.

6. Show and label ℄ piers(s)/bent(s). Piers/bents shall be designated from left to right using consecutive numbers when more than one pier/bent exists, e.g., ℄ Pier 1/ ℄ Bent 1.

7. Label spans from left to right using lower case designators, e.g., Span a, Span b.

8. Dimension span length(s) along the centerline of the baseline . This is the distance between the face of backwall/end of slab and the ℄ of pier/bent, ℄ pier/bent, ℄ to ℄ pier/bent, and ℄ pier/bent to face of backwall/end of slab. etc.

9. Label transverse bar designation and spacing.

10. Laps should be shown parallel to skew angle.

11. Show skew angle.

12. For instructions on completing the title block, see File Nos. 04.02-1 and -2.

13. For instructions on completing the project block, see File No. 04.01.

14. For instructions on completing this portion of sheet, see File No. 01.01-7.