TABLE OF CONTENTS – ABUTMENTS

CHAPTER 17

FILE NO.	TITLE	DATE
	TABLE OF CONTENTS AND INTRODUCTION	
17.TOC-1	Table of Contents - Chapter 17	17Aug2016
17.TOC-2	Table of Contents - Chapter 17	18May2016
17.TOC-3	Table of Contents - Chapter 17	18May2016
17.TOC-4	Table of Contents - Chapter 17	18May2016
17.TOC-5	Table of Contents - Chapter 17	18May2016
17.TOC-6	Table of Contents - Chapter 17	17Aug2016
17.TOC-7	Table of Contents - Chapter 17	17Aug2016
17.TOC-8	Table of Contents - Chapter 17	17Aug2016
17.00-1	Introduction - Chapter 17	18May2016
	GENERAL INFORMATION AND SELECTION CRITERIA	
17.01-1	Abutment Types	18May2016
17.01-2	Abutment Types	18May2016
17.01-3	Abutment Types	17Aug2016
17.01-4	Abutment Types	17Aug2016
17.01-5	Abutment Types	18May2016
17.01-6	Abutment Types	18May2016
17.01-7	Use of MSE Walls and GRS Technology	18May2016
17.01-8	Miscellaneous Requirements and Information	18May2016
17.01-9	Abutment Type Selection Criteria	18May2016
17.01-10	Abutment Type Selection Criteria	18May2016
17.01-11	Abutment Type Selection Criteria	18May2016
17.01-12	Abutment Type Selection Criteria	18May2016
17.01-13	Abutment Type Selection Criteria	18May2016
* 17.01-14	Abutment Type Selection Algorithm	18May2016
17.01-15	General Guidelines for Integral Abutments	18May2016
17.01-16	General Guidelines for Integral Abutments	18May2016
	GENERAL DESIGN REQUIREMENTS	
17.02-1	General Information	18May2016
17.02-2	General Information	12Sep2014
17.02-3	Geotechnical Design Data Tables	17Aug2016
17.02-4	Architectural Treatment for Abutments	12Sep2014

* Indicates 11 x 17 sheet; all others are 8 ½ x 11

TABLE OF CONTENTS – ABUTMENTS

CHAPTER 17

FILE NO.	TITLE	DATE
	GENERAL ABUTMENT DETAILS	
17.03-1	Abutment Neat Component Details - Backwall Details	06Feb2012
17.03-2	Abutment Neat Component Details - Backwall Details	06Feb2012
17.03-3	Abutment Neat Component Details - Backwall Clearances for Beams/Girders	06Feb2012
17.03-4	Abutment Neat Component Details - Stem and Seat/Pad Details	06Feb2012
17.03-5	Abutment Neat Component Details - Seat/Pad Details	06Feb2012
17.03-6	Abutment Neat Component Details - Seat/Pad and Wash Details	06Feb2012
17.03-7	Anchor Bolt Layout Details	10Jun2013
17.03-8	Abutment U-Back Wingwall Details - Heights ≤ 10'-3"	06Feb2012
17.03-9	Abutment U-Back Wingwall Details - Heights > 10'-3"	06Feb2012
17.03-10	Abutment Elephant Ear Wingwall Details	06Feb2012
17.03-11	Abutment Elephant Ear Wingwall Details	06Feb2012
17.03-12	Abutment Footing Types and Details - Spread Footings	06Feb2012
17.03-13	Abutment Footing Types and Details - Spread Footings	10Jun2013
17.03-14	Abutment Footing Types and Details - Footings on Piles	06Feb2012
17.03-15	Abutment Footing Types and Details - Footings on Piles	06Feb2012
17.03-16	Abutment Footing Types and Details - Footings on Piles	06Feb2012
17.03-17	Abutment Footing Types and Details - Footings on Piles	06Feb2012
17.03-18	Abutment Footing Types and Details - Footings on Piles	06Feb2012
17.03-19	Utility Blockout Details	06Feb2012
17.03-20	Utility Blockout Details	06Feb2012
17.03-21	End of Beam/Girder Details - Steel-Full-Integral-Skew = 0°	06Feb2012
17.03-22	End of Beam/Girder Details - Steel-Full-Integral-Skew > 0°	06Feb2012
17.03-23	End of Beam/Girder Details - Steel-Semi-Integral-Skew = 0°	06Feb2012
17.03-24	End of Beam/Girder Details - Steel Semi-Integral-Skew > 0°	06Feb2012
17.03-25	End of Beam/Girder Details -Steel-Full/Semi-Integral-Notes	18May2016
17.03-26	End of Beam Details - Prestressed Concrete - Full/Semi-Integral	15Oct2015
17.03-27	End of Beam Details - Prestressed Concrete - Full Integral-Skew = 0° and for 0° < Skew ≤ 30°	06Feb2012
17.03-28	End of Beam Details – Prestressed Concrete - Semi-Integral-Skew = 0° and for 0° < Skew ≤ 30° and Notes for End of Prestressed Concrete Beam Details	06Feb2012
17.03-29	End of Beam Details – Notes for End of Prestressed Concrete Beam Details	15Oct2015
17.03-30	Expanded Polystrene (EPS) Details	12Sep2014
17.03-31	Steel Beam/Girder Vent Hole Detail - Integral Abutments	06Feb2012
17.03-32	Construction Joints – General Information	06Feb2012
17.03-33	Construction Joints – Shear Keys and Vertical Construction Joints	06Feb2012
17.03-34	Construction Joints – Vertical Construction Joints	06Feb2012

* Indicates 11 x 17 sheet; all others are 8 ½ x 11

TABLE OF CONTENTS – ABUTMENTS

CHAPTER 17

FILE NO.	TITLE	DATE
	FULL INTEGRAL ABUTMENTS	
17.04-1	General Information	18May2016
17.04-2	Sample Design Calculations	06Feb2012
17.04-3	Sample Design Calculations	06Feb2012
17.04-4	Sample Design Calculations	06Feb2012
17.04-5	Sample Design Calculations	06Feb2012
17.04-6	Sample Design Calculations	06Feb2012
17.04-7	Sample Design Calculations	06Feb2012
17.04-8	Sample Design Calculations	06Feb2012
17.04-9	Sample Design Calculations	06Feb2012
17.04-10	Sample Design Calculations	06Feb2012
17.04-11	Sample Design Calculations	06Feb2012
17.04-12	Sample Design Calculations	06Feb2012
17.04-13	Sample Design Calculations	06Feb2012
17.04-14	Sample Design Calculations	06Feb2012
17.04-15	Sample Design Calculations	06Feb2012
17.04-16	Sample Design Calculations	06Feb2012
17.04-17	Sample Design Calculations	06Feb2012
17.04-18	Sample Design Calculations	06Feb2012
17.04-19	Sample Design Calculations	06Feb2012
17.04-20	Sample Design Calculations	06Feb2012
17.04-21	Sample Design Calculations	06Feb2012
17.04-22	Sample Design Calculations	06Feb2012
17.04-23	Sample Design Calculations	06Feb2012
17.04-24	Sample Design Calculations	06Feb2012
17.04-25	Sample Design Calculations	06Feb2012
17.04-26	Sample Design Calculations	06Feb2012
17.04-27	Sample Design Calculations	06Feb2012
17.04-28	Sample Design Calculations	06Feb2012
17.04-29	Sample Design Calculations	06Feb2012
17.04-30	Sample Design Calculations	06Feb2012
17.04-31	Sample Design Calculations	06Feb2012
17.04-32	Sample Design Calculations	06Feb2012
17.04-33	Sample Design Calculations	06Feb2012
17.04-34	Sample Design Calculations	06Feb2012
17.04-35	Sample Design Calculations	06Feb2012
17.04-36	Lateral Buttress Force Derivation	06Feb2012
17.04-37	Lateral Buttress Force Derivation	06Feb2012

* Indicates 11 x 17 sheet; all others are 8 ½ x 11

TABLE OF CONTENTS – ABUTMENTS

CHAPTER 17

FILE NO.	TITLE	DATE
	FULL INTEGRAL ABUTMENTS (Continued)	
17.04-38	Lateral Buttress Force Derivation	06Feb2012
17.04-39	U-Back Wing Detail	06Feb2012
17.04-40	Alternate Wing and Reinforcement Detail	06Feb2012
17.04-41	Staged Construction Details – w/ Deck Closure	06Feb2012
17.04-42	Staged Construction Details – w/o Deck Closure	06Feb2012
	FULL INTEGRAL ABUTMENT SAMPLE PLANS	
17.05-1	General Information	06Feb2012
17.05-2	General Information	06Feb2012
* 17.05-3	Abutment Details Sheet - Steel Beams/Girders	18May2016
* 17.05-4	Abutment Details Sheet - Steel Beams/Girders	18May2016
17.05-5	Check List - Steel Beams/Girders	18May2016
17.05-6	Check List - Steel Beams/Girders	18May2016
* 17.05-7	Abutment Details Sheet - Prestressed Concrete Beams	18May2016
* 17.05-8	Abutment Details Sheet - Prestressed Concrete Beams	18May2016
17.05-9	Check List - Prestressed Concrete Beams	18May2016
17.05-10	Check List - Prestressed Concrete Beams	12Sep2014
	SEMI-INTEGRAL ABUTMENTS	
17.06-1	General Information	18May2016
17.06-2	Sample Design Calculations	06Feb2012
17.06-3	Sample Design Calculations	06Feb2012
17.06-4	Sample Design Calculations	06Feb2012
17.06-5	Sample Design Calculations	06Feb2012
17.06-6	Sample Design Calculations	06Feb2012
17.06-7	Sample Design Calculations	06Feb2012
17.06-8	Sample Design Calculations	06Feb2012
17.06-9	Sample Design Calculations	06Feb2012
17.06-10	Sample Design Calculations	06Feb2012
17.06-11	Sample Design Calculations	06Feb2012
17.06-12	Sample Design Calculations	06Feb2012
17.06-13	Sample Design Calculations	06Feb2012
17.06-14	Sample Design Calculations	06Feb2012

* Indicates 11 x 17 sheet; all others are 8 ½ x 11

TABLE OF CONTENTS – ABUTMENTS

CHAPTER 17

FILE NO.	TITLE	DATE
	SEMI-INTEGRAL ABUTMENTS (Continued)	
17.06-15	Sample Design Calculations	06Feb2012
17.06-16	Sample Design Calculations	06Feb2012
17.06-17	Sample Design Calculations	06Feb2012
17.06-18	Sample Design Calculations	06Feb2012
17.06-19	Sample Design Calculations	06Feb2012
17.06-20	Sample Design Calculations	06Feb2012
17.06-21	Sample Design Calculations	06Feb2012
17.06-22	Sample Design Calculations	06Feb2012
17.06-23	Lateral Buttress Force Derivation	06Feb2012
17.06-24	Lateral Buttress Force Derivation	06Feb2012
17.06-25	Lateral Buttress Force Derivation	06Feb2012
17.06-26	Staged Construction Details - w/ Deck Closure	06Feb2012
17.06-27	Staged Construction Details - w/o Deck Closure	06Feb2012
17.06-28	Staged Construction Details - w/o Deck Closure	06Feb2012
	SEMI-INTEGRAL ABUTMENT SAMPLE PLANS	
17.07-1	General Information	06Feb2012
17.07-2	General Information	06Feb2012
* 17.07-3	Abutment Details Sheet - Steel Beams/Girders	18May2016
* 17.07-4	Abutment Details Sheet - Steel Beams/Girders	18May2016
* 17.07-5	Abutment Details Sheet - Steel Beams/Girders	18May2016
* 17.07-6	Abutment Details Sheet - Steel Beams/Girders	18May2016
* 17.07-7	Abutment Details Sheet - Prestressed Concrete Beams	18May2016
* 17.07-8	Abutment Details Sheet - Prestressed Concrete Beams	18May2016
* 17.07-9	Abutment Details Sheet - Prestressed Concrete Beams	18May2016
* 17.07-10	Abutment Details Sheet - Prestressed Concrete Beams	18May2016
17.07-11	Check List	12Sep2014
17.07-12	Check List	12Sep2014
	DECK SLAB EXTENSIONS	
17.08-1	General Information	18May2016
17.08-2	General Information	06Feb2012
17.08-3	General Information	06Feb2012
17.08-4	General Information	06Feb2012

* Indicates 11 x 17 sheet; all others are 8 ½ x 11

TABLE OF CONTENTS – ABUTMENTS

CHAPTER 17

FILE NO.	TITLE	DATE
	DECK SLAB EXTENSIONS (Continued)	
17.08-5	Sample Design Calculations	06Feb2012
17.08-6	Sample Design Calculations	06Feb2012
17.08-7	Sample Design Calculations	06Feb2012
17.08-8	Sample Design Calculations	06Feb2012
17.08-9	Sample Design Calculations	06Feb2012
17.08-10	Sample Design Calculations	06Feb2012
17.08-11	Sample Design Calculations	06Feb2012
17.08-12	Sample Design Calculations	06Feb2012
17.08-13	Sample Design Calculations	16Jan2014
17.08-14	Sample Design Calculations	16Jan2014
17.08-15	Sample Design Calculations	06Feb2012
17.08-16	Sample Design Calculations	06Feb2012
17.08-17	Sample Design Calculations	06Feb2012
17.08-18	Sample Design Calculations	06Feb2012
17.08-19	Sample Design Calculations	06Feb2012
17.08-20	Sample Design Calculations	06Feb2012
17.08-21	Sample Design Calculations	06Feb2012
17.08-22	Sample Design Calculations	06Feb2012
17.08-23	Sample Design Calculations	06Feb2012
17.08-24	Slab End Details - Steel Members-w/ Buried Approach Slab	17Aug2016
17.08-25	Slab End Details - Steel Members-w/o Approach Slab	17Aug2016
17.08-26	Slab End Details - Prestressed Members-w/ Buried Approach Slab	17Aug2016
17.08-27	Slab End Details - Prestressed Members-w/o Approach Slab	17Aug2016
17.08-28	Rub Plate Detail	06Feb2012
17.08-29	Terminal Wall Details	17Aug2016
17.08-30	Terminal Wall Details	06Feb2012
	DECK SLAB EXTENSIONS SAMPLE PLANS	
17.09-1	General Information	06Feb2012
17.09-2	General Information	06Feb2012
* 17.09-3	Abutment Details Sheet - Steel Beams/Girders	17Aug2016
* 17.09-4	Abutment Details Sheet - Steel Beams/Girders	17Aug2016
* 17.09-5	Deck Slab Details Sheet - Steel Beams/Girders	17Aug2016
17.09-6	Check List	17Aug2016
17.09-7	Check List	12Sep2014

* Indicates 11 x 17 sheet; all others are 8 ½ x 11

TABLE OF CONTENTS – ABUTMENTS

CHAPTER 17

FILE NO.	TITLE	DATE
	VIRGINIA ABUTMENT SAMPLE PLANS	
17.10-1	General Information	18May2016
17.10-2	General Information	18May2016
* 17.10-3	Abutment Details Sheet	18May2016
* 17.10-4	Abutment Details Sheet	18May2016
* 17.10-5	Abutment Details Sheet	18May2016
* 17.10-6	Abutment Details Sheet	18May2016
* 17.10-7	Abutment Details Sheet	18May2016
* 17.10-8	Deck Slab Details Sheet	17Aug2016
17.10-9	Check List	18May2016
17.10-10	Check List	17Aug2016
	CONVENTIONAL ABUTMENTS SAMPLE PLANS	
17.11-1	General Information	06Feb2012
17.11-2	General Information	06Feb2012
* 17.11-3	Abutment Details Sheet - Steel Piles	06Feb2012
* 17.11-4	Abutment Details Sheet - Steel Piles	06Feb2012
* 17.11-5	Abutment Details Sheet - Steel Piles	06Feb2012
* 17.11-6	Abutment Details Sheet - Spread Footing	06Feb2012
* 17.11-7	Abutment Details Sheet - Spread Footing	10Jun2013
* 17.11-8	Abutment Details Sheet - Spread Footing	06Feb2012
17.11-9	Check List	12Sep2014
17.11-10	Check List	12Sep2014
	ABUTMENT DRAINAGE	
17.12-1	General Information	06Feb2012
17.12-2	Bridges over Highways or Railroads - Full and Semi-Integral Abutments	06Feb2012
17.12-3	Bridges over Highways or Railroads - Conventional Shelf/ Cantilever Abutments with and without Deck Slab Extension	17Aug2016
17.12-4	Bridges over Streams - Full and Semi-Integral Abutments	06Feb2012
17.12-5	Bridges over Streams - Conventional Shelf/Cantilever Abutments with and without Deck Slab Extension	17Aug2016
17.12-6	Abutment Drain Details - Deck Slab Extensions	17Aug2016
17.12-7	Abutment Drain Details - Deck Slab Extensions	17Aug2016
17.12-8	Abutment Drain Details - Deck Slab Extensions	06Feb2012

* Indicates 11 x 17 sheet; all others are 8 ½ x 11

TABLE OF CONTENTS – ABUTMENTS

CHAPTER 17

FILE NO.	TITLE	DATE
	SELECT BACKFILL MATERIAL REQUIREMENTS	
17.13-1	General Information - Limits of Select Backfill Material Detail-Definitions	12Sep2014
17.13-2	General Information - Limits of Select Backfill Material Details-Full Integral Abutment in Cut Section and Fill Section	15Oct2015
17.13-3	General Information - Limits of Select Backfill Material Details-Semi-Integral Abutment in Cut Section and Fill Section	15Oct2015
17.13-4	General Information - Limits of Select Backfill Material Details-Conventional Abutment in Cut Section and Fill Section	15Oct2015
17.13-5	General Information – S&B Standard Cell Detail and Design and Estimated Quantities	17Aug2016
17.13-6	General Information - Design and Estimated Quantities	12Sep2014
17.13-7	General Information - Design and Estimated Quantities	12Sep2014
17.13-8	Special Provision for Geotextile Stabilization Fabric	12Sep2014

* Indicates 11 x 17 sheet; all others are 8 ½ x 11

INTRODUCTION

An abutment provides support between a bridge span and a roadway embankment, resists earth pressure to maintain the required elevation difference and transmits the loads from the span and the embankment to the foundation.

It is the intent of this chapter is to establish the guidelines, practices and specific requirements of the Structure and Bridge Division for the design and detailing of abutments and related structures. It is not the intent of these requirements and guidelines to supersede the requirements contained in Chapter 1 of this manual but to convey necessary information to the designer for the detailing of various components of the bridge abutments and related structures.

While this chapter is noted as "abutments," the major emphasis is to eliminate joints where possible on bridges. It has been well documented in inspection reports not only in Virginia, but throughout the other states, that leaky joints are a serious issue. An algorithm is provided as a guide for the abutment type selection. While the term "total bridge length" is used in the selection criteria, the details can also be utilized for bridge units (continuous spans) where the total bridge length is in excess of that noted in the table.

References to AASHTO LRFD specifications in this chapter refer to the AASHTO *LRFD Bridge Design Specifications* including Interims and VDOT Modifications (current IIM-S&B-80).

The practices and requirements set forth herein are intended to supplement or clarify the requirements of the AASHTO LRFD specifications, and to provide additional information to assist the designer. In the event of conflict(s) between the practices and requirements set forth herein and those contained in the AASHTO LRFD specifications, the more stringent requirements shall govern.

It is expected that the users of this chapter will adhere to the practices and requirements stated herein. For situations not covered by these guidelines, a design waiver/approval will be required. The designer shall be responsible for investigation, analysis and calculations necessary to secure a design waiver/approval.

Major changes and/or additions to the past office practice (Part 2 of this manual) are as follows:

1. Updated and expanded content of all previous abutment types. Added prestressed concrete (PSC) voided slab or box beam superstructures and Virginia Abutment without tooth joint content.

2. Added Mechanically Stabilized Earth (MSE) wall and Geosynthetic Reinforced Soil (GRS) technology requirements including minimum distance between MSE wall panels and piling. Expanded content on MSE wall strap use on abutments and added content on steel pile sleeve use.

3. Restructured and revised Abutment Type Selection Criteria. Added "curved" column to selection criteria table for conventional cantilever abutments with deck slab extension and design waiver content for abutment types.

4. Added temporary support details for prestressed concrete beams.

NOTE:

Due to various restrictions on placing files in this manual onto the Internet, portions of the drawings shown do not necessarily reflect the correct line weights, line types, fonts, arrowheads, etc. Wherever discrepancies occur, the written text shall take precedence over any of the drawn views.

ABUTMENT TYPES:

The abutment types covered in this chapter include the following:

- Full Integral Abutment
- Semi-Integral Abutment (including jointless abutment alternatives for PSC voided slab and box beam superstructures)
- Conventional Cantilever Abutment with Deck Slab Extension
- Virginia Abutment
- Conventional Cantilever Abutment

Each abutment type is shown below with general requirements. Some variations in layout are provided per type for illustration purposes.

- **Full Integral Abutment:**

Only abutment type where one row of piles can be used, except as noted for single span PSC voided slab or box beam bridges on File No. 17.01-3.

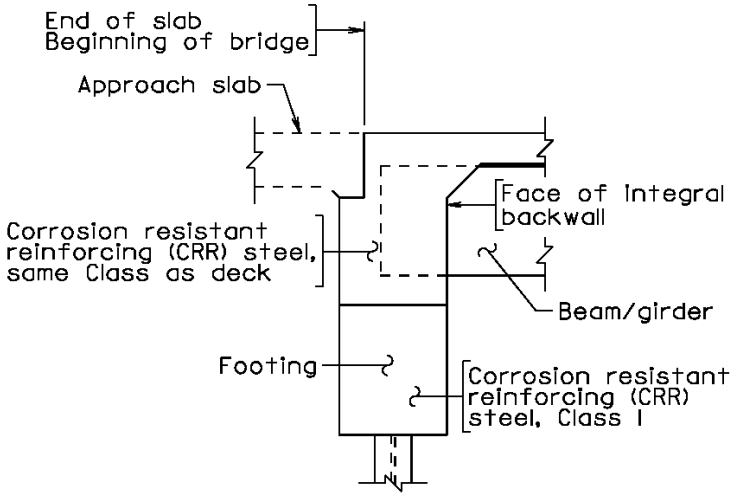

- **Full Integral Abutment adjacent to MSE wall:**

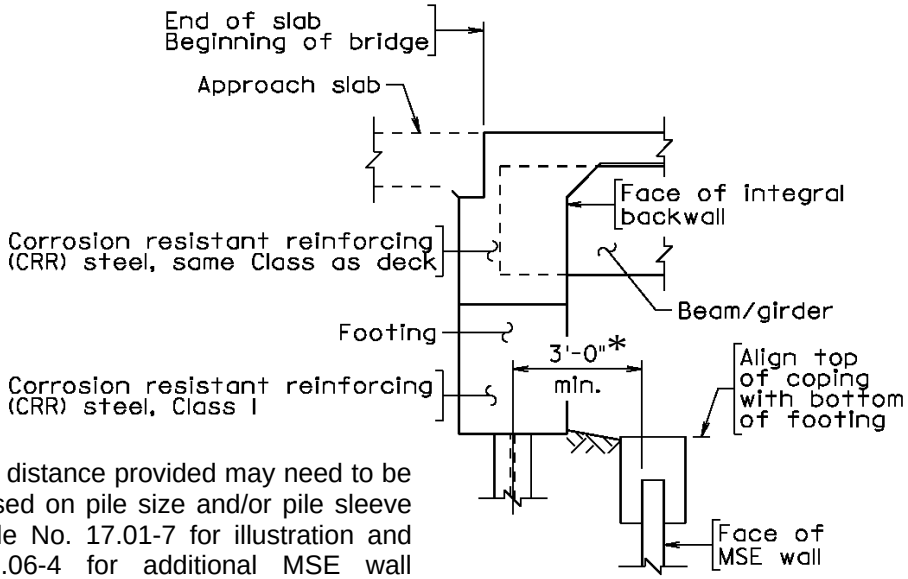

* The minimum distance provided may need to be increased based on pile size and/or pile sleeve use. See File No. 17.01-7 for illustration and File No. 06.06-4 for additional MSE wall requirements for bridges over railroads.

- **Semi-Integral Abutment:**

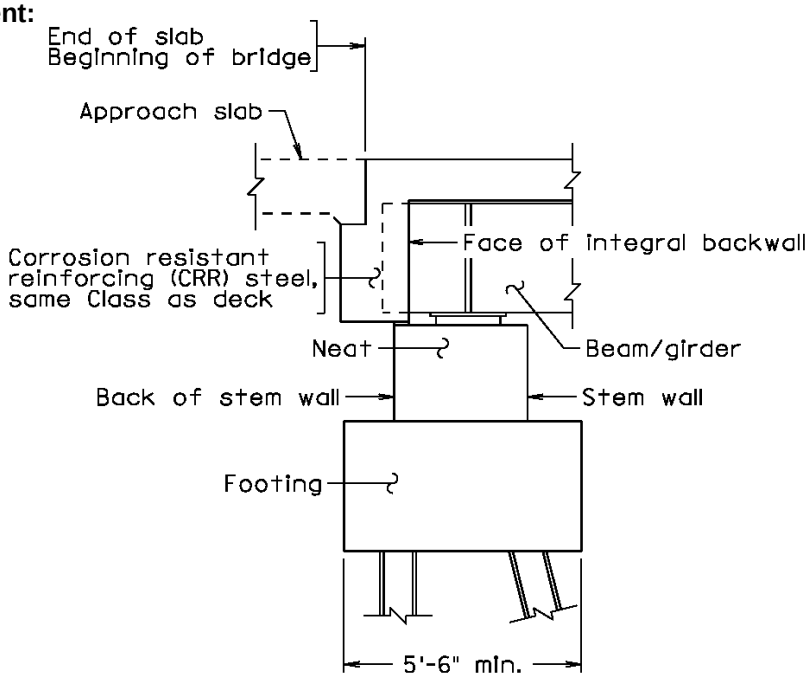

- **Semi-Integral Abutment adjacent to MSE wall:** (MSE wall layout and minimum distances similar for remaining abutment types):

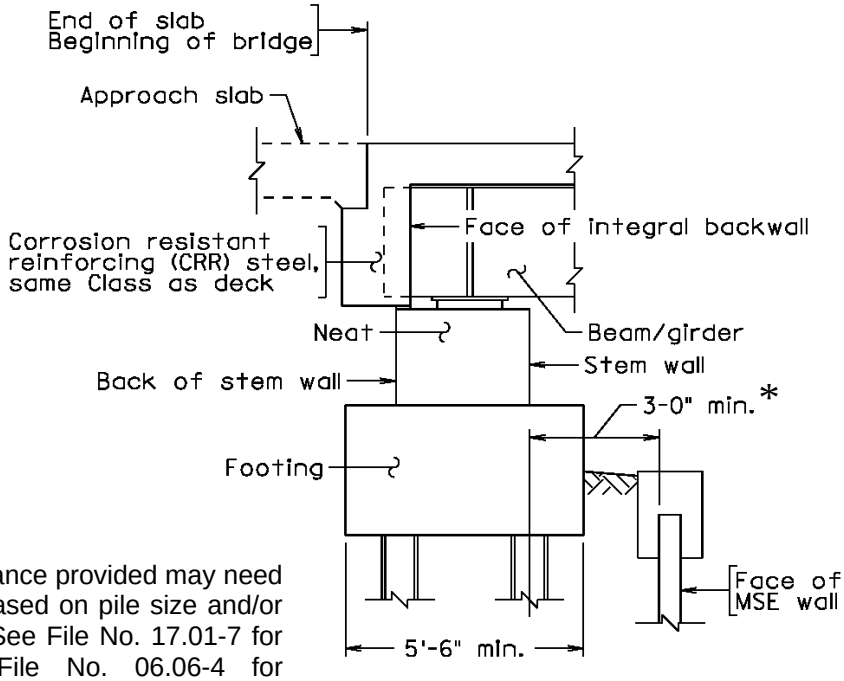

* The minimum distance provided may need to be increased based on pile size and/or pile sleeve use. See File No. 17.01-7 for illustration and File No. 06.06-4 for additional MSE wall requirements for bridges over railroads.

- **Jointless Abutment Types for PSC voided slab or box beam superstructures:**

Stub Abutment (one pile row is an option only on single span bridges):

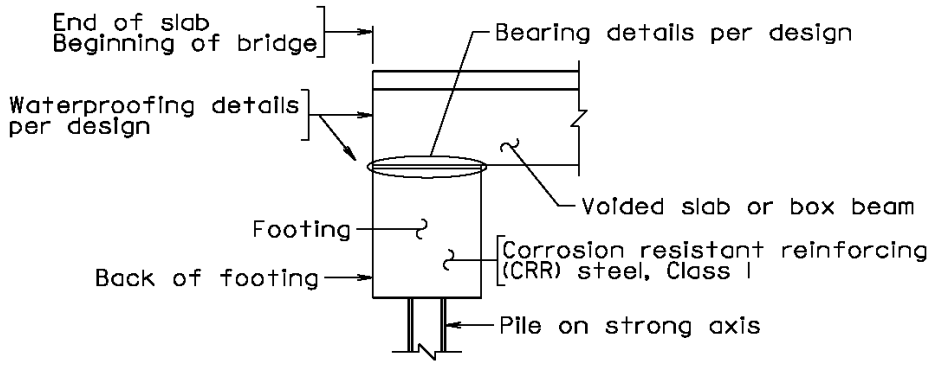

End of slab/beam shall preferably align with the back of footing, but may not be feasible where long slab/beam extensions past the bearing centerline would result. If approach slabs are needed, they shall be buried (similar to the details shown below) and seated on a notch in the footing.

Abutment on multi-row pile footing or spread footing:

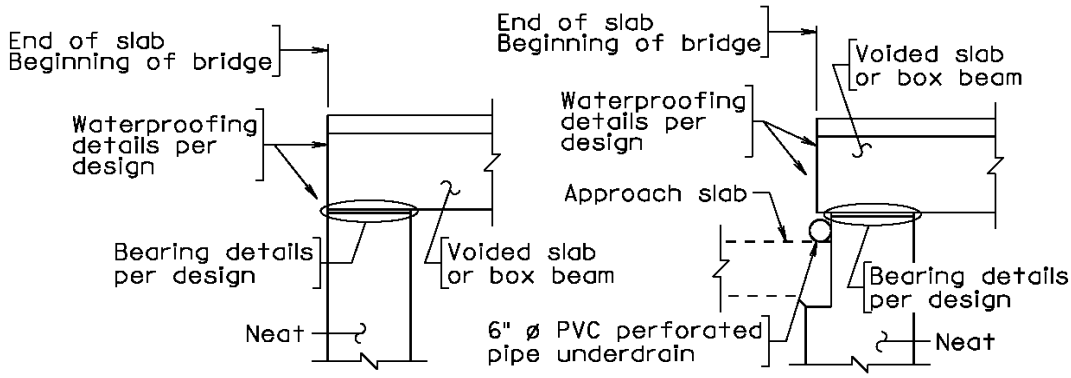

On the rare occasion approach slabs are used on this type of superstructure, voided slab or box beam shall extend beyond the vertical face of approach slab seat and 6” diameter PVC perforated pipe underdrain shall be used. Surround the underdrain pipe with No. 57, 78 or 8 stone wrapped in a geotextile. Add note on plans to include the cost of perforated pipe underdrain, No. 57, 78 or 8 stone and geotextile in the cost of concrete for approach slab. The designer will need to determine the distance the beam extends past the vertical face.

Abutment Details not to be used:

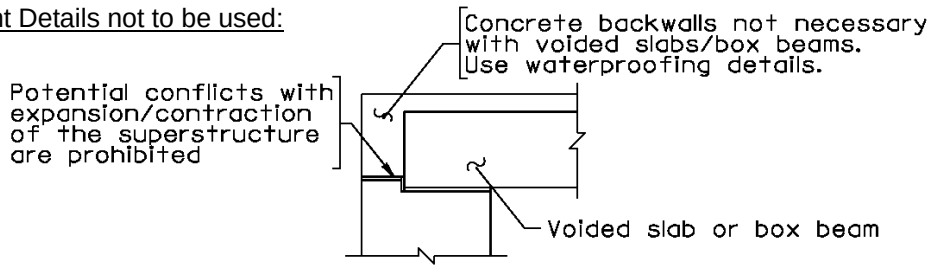

Not to be Used

- **Conventional Cantilever Abutments with Deck Slab Extension:**

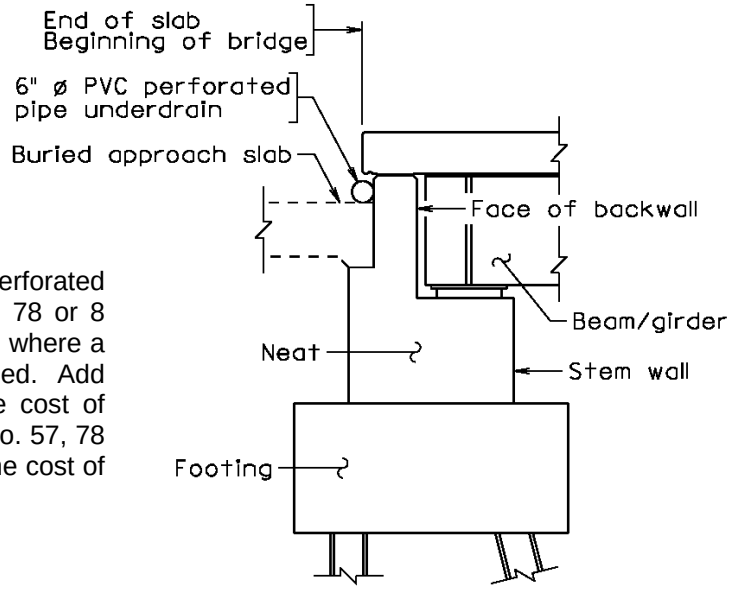

Surround 6” diameter PVC perforated pipe underdrain with No. 57, 78 or 8 stone wrapped in a geotextile where a buried approach slab is needed. Add note on plans to include the cost of perforated pipe underdrain, No. 57, 78 or 8 stone and geotextile in the cost of concrete for approach slab.

- **Virginia Abutment:**

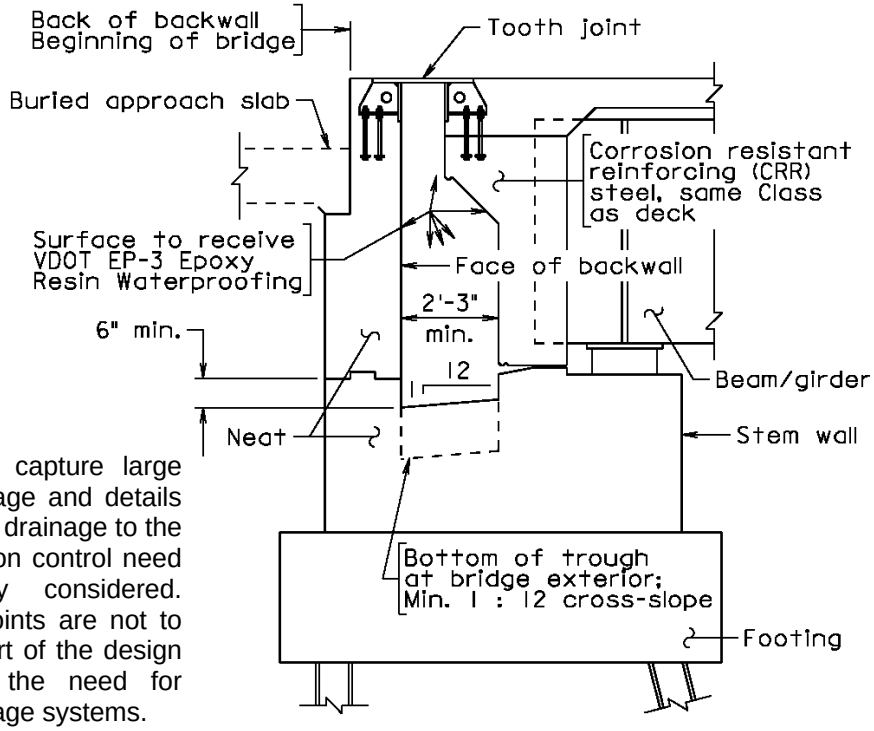

Tooth joints can capture large volumes of drainage and details for conveyance of drainage to the ground and erosion control need to be carefully considered. However, tooth joints are not to be considered part of the design of or eliminate the need for bridge deck drainage systems.

The Designer shall work with the District to determine the minimum trough depth sufficient for manual cleanout. Where beam/girder depths are shallower, additional stem wall length and/or footing depth may be necessary to ensure the minimum trough depth and cross-slope are maintained, but is particular to the details of the bridge.

- **Virginia Abutment without tooth joint with integral backwall (design approval required):**

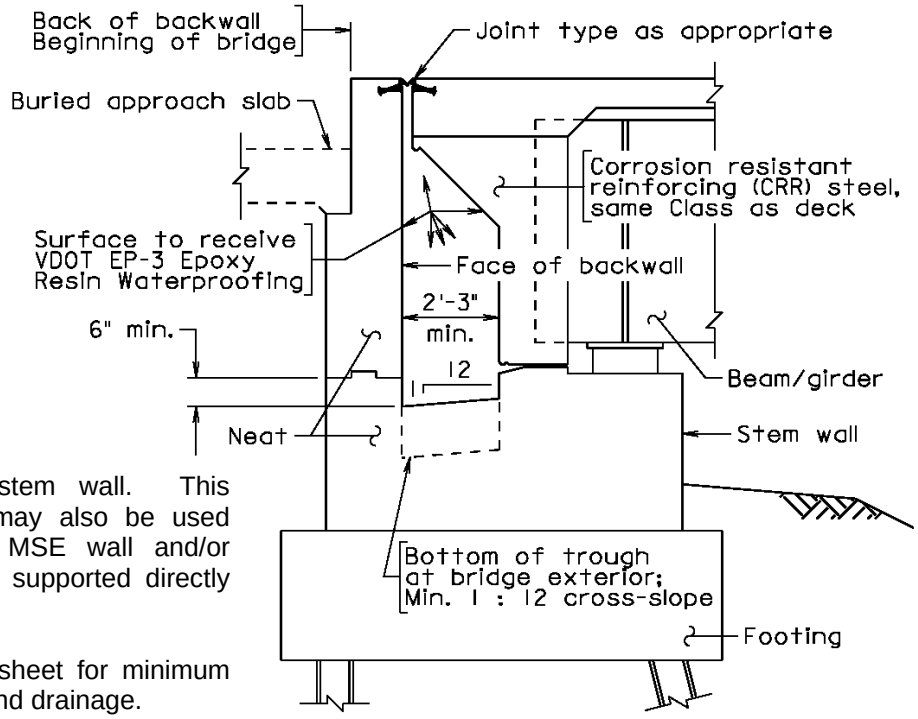

Shown with stem wall. This configuration may also be used when behind MSE wall and/or beam/girder is supported directly on footing.

See previous sheet for minimum trough depth and drainage.

- **Virginia Abutment without tooth joint with deck slab extension (design approval required):**

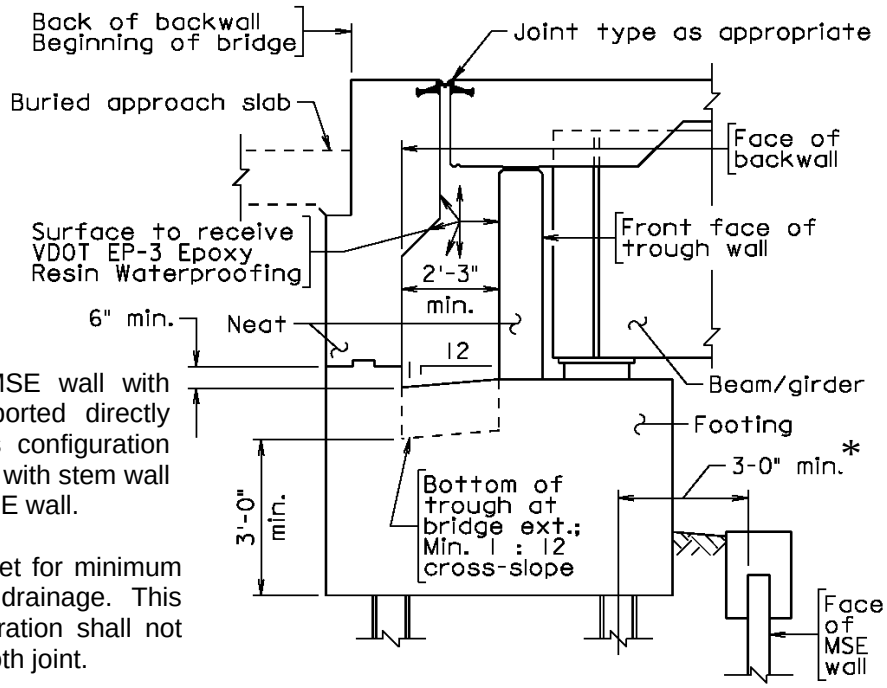

Shown behind MSE wall with beam/girder supported directly on footing. This configuration may also be used with stem wall and/or without MSE wall.

See previous sheet for minimum trough depth and drainage. This abutment configuration shall not be used with a tooth joint.

*The minimum distance provided may need to be increased based on pile size and/or pile sleeve use. See File No. 17.01-7 for illustration and File No. 06.06-4 for additional MSE wall requirements for bridges over railroads.

- **Conventional Cantilever Abutments (design waiver required):**

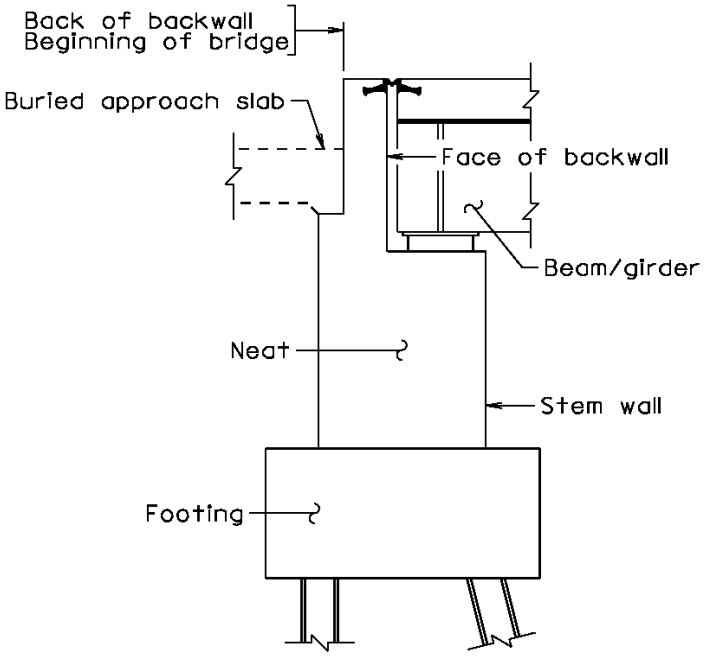

USE OF MECHANICALLY STABILIZED EARTH (MSE) WALLS AND GEOSYNTHETIC REINFORCED SOIL (GRS) TECHNOLOGY:

Use of MSE walls adjacent to abutments can reduce the length of bridge, reduce superstructure weight on substructure and eliminate the need for tall cantilever abutments, possibly lowering the overall bridge cost. However, MSE walls require special consideration for future widening.

Unless a design approval is granted by the District Structure and Bridge Engineer (DBE):

- MSE wall location for overpass structures shall accommodate a minimum of one future lane in each direction for the roadway below the overpass.
- MSE wall limits shall extend sufficiently to allow future widening of the overpass by one lane in each direction.
- MSE walls are prohibited in karst areas. Where design approvals are sought, the subsurface conditions shall be investigated more thoroughly than what is typically performed at sites where karst conditions are not present. The subsurface investigation in karst areas will likely involve the use of a greater number of SPT borings and/or CPT probes, as well as the use of geophysical testing (e.g., electrical resistivity) to better map the subsurface conditions.
- MSE walls are prohibited in flood plains. Where design approvals are sought, special considerations will be required. These special considerations include, but are not limited to, the use of a free-draining select backfill material within the reinforced mass and geosynthetic fabric to separate the reinforced mass from the retained soil.

GRS Walls and Integrated Bridge Systems are prohibited unless a design approval is granted by the DBE.

Minimum Distance between MSE Wall Panels and Piling: MSE wall straps can generally be splayed a maximum of 15 degrees from their intended perpendicular orientation to avoid pile and sleeve locations without affecting the stability of the retained soil mass (except for corner connections which are specially designed for higher splay angles). Minimum panel thickness is typically 5 ½". Pile orientation is shown for full integral abutments, but minimum distances to the toe pile are the same for other abutment types. Increasing these minimum distances may be necessary to accommodate deflection and lateral force of full integral abutments.

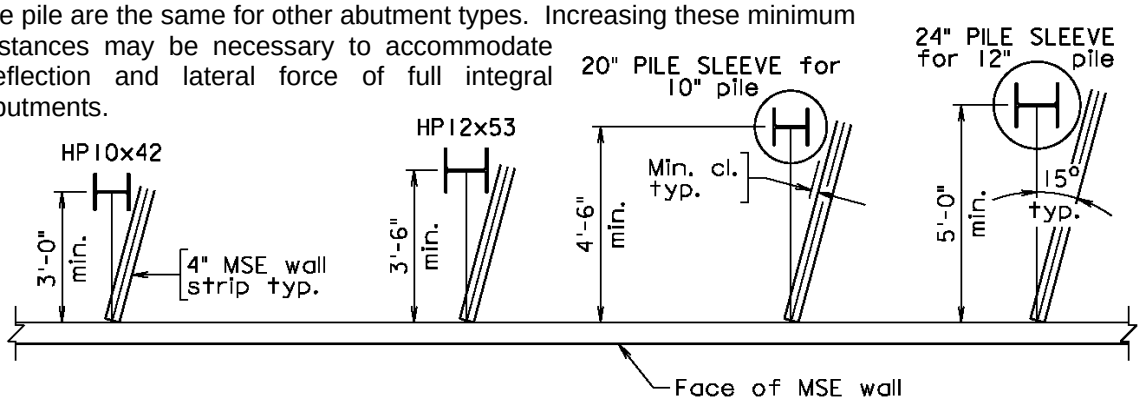

Place the following note on MSE plans where these minimum distances are used with steel piles:

> When the MSE wall reinforcing straps are metallic, they shall be placed with at least 3" clear to the pile and the pile sleeve (if present). Where 3" clear cannot be obtained using a maximum 15 degree splay, the minimum clear can be reduced, but shall not be less than 1". The MSE Wall manufacturer shall reduce the tensile resistance of all reinforcement by the cosine of the 15 degree maximum splay angle in the strap design.

MISCELLANEOUS REQUIREMENTS AND INFORMATION:

MECHANICALLY STABILIZED EARTH (MSE) WALL STRAP USE ON ABUTMENTS:

MSE wall straps shall not be used on any abutment type without the prior approval of the District Structure and Bridge Engineer (DBE). MSE wall straps shall not be used with full integral abutments as they would resist the thermal contraction and shrinkage of the superstructure.

MSE wall straps may be deemed appropriate to provide abutment stability where adjacent to MSE walls and piles are vertical. However, the use of MSE wall straps shall not be justification for supporting the abutment on a single row of piles. Multiple pile rows (uniform or staggered pattern) are still required for abutment support, except in the case of full integral abutments or as noted for some single span PSC voided slab or box beam bridges on File No. 17.01-3. Minimum distance between pile rows using a staggered pattern is 2'-6".

STEEL PILE SLEEVE USE:

Steel pile sleeves (cans) around piles filled with sand or gravel are prohibited with all abutment types when their use is intended to reduce the pressure on MSE wall panels. These materials settle within the cans over time and lateral pressure can still impart to the panels. Use of steel pile sleeves around piles is acceptable where downdrag is an issue or piles must be driven within a MSE wall mass after the MSE wall has been constructed.

GENERAL TERMINOLOGY:

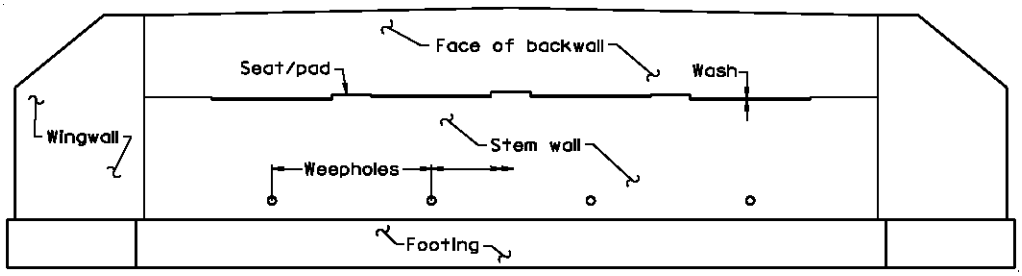

ABUTMENT ELEVATION

Although there are various terms applied to the parts of an abutment section, the following will be used in this chapter. The typical elevation and section is shown for a conventional cantilever abutment adjacent to a stream.

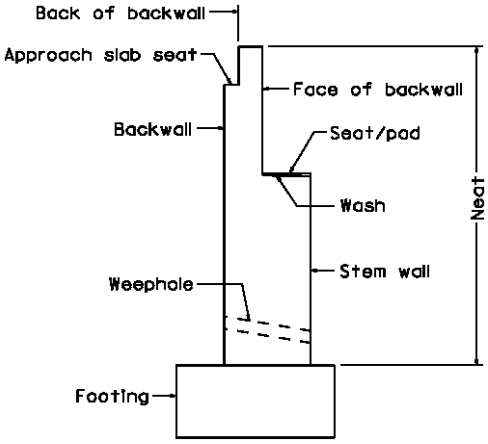

ABUTMENT SECTION

ABUTMENT TYPE SELECTION CRITERIA:

The abutment design process starts with the abutment type selection. The selection process is based on abutment performance requirements, site location, geotechnical conditions, scour, costs and so forth.

Bridges of all geometry shall eliminate joints to the greatest extent possible.

The abutment type selection criteria limits are based upon Virginia experience where particular abutment types have been used with satisfactory results. The limits do not mean that jointless abutment types falling outside the limits should not be investigated. Designers, in consultation with the Department, shall consider whether it makes sense to pursue the use of jointless abutment types which are beyond the given limits. Considerations shall include design issues (related to both the substructure and superstructure as appropriate), constructability, future maintenance, and any other factors as necessary. The Designer may contact the Structure and Bridge Engineering Services Program Area for recommendations/guidance. If the investigation reveals that exceeding the limits is feasible and beneficial, the designer shall submit a recommendation for abutment type to the District Structure and Bridge Engineer (DBE). After concurrence from the DBE, a design waiver request shall be submitted to the State Structure and Bridge Engineer. See following content for selection hierarchy, selection criteria and design waiver content.

SELECTION HIERARCHY:

Abutment type selection shall be in the following order: Full integral abutment, semi-integral abutment, conventional cantilever abutment with deck slab extension, Virginia Abutment. When the selection criteria specified below for full integral abutment, semi-integral abutment, conventional abutment with deck slab extension and the Virginia Abutment cannot be satisfied, a conventional abutment with joints may be considered with the approval of a design waiver by the State Structure and Bridge Engineer. For selection algorithm, see File No. 17.01-14.

The Virginia Abutment is a jointless design concept where drainage is kept from impacting the superstructure for bridges with lengths or skews beyond the established criteria for other jointless bridge types. Where Virginia Abutments are used with tooth joints, the details shown in File Nos. 17.10-1 thru -10 shall be used. Where other approved joint types are sufficient for length and skew, Virginia Abutments without tooth joints may be considered (with integral backwall or deck extension) and used with a design approval from the DBE. For such cases, the District shall be consulted on the preferred Virginia Abutment configuration without tooth joint.

Only in cases of extreme bridge length or other geometric conditions where tooth joint design at the abutments is not practical should a joint at piers/bents be considered. When a joint is introduced at a pier/bent, the Virginia Pier Cap shall be considered. See File No. 15.01-4 for conceptual details and requirements for Virginia Pier Cap. A design waiver approved by the State Structure and Bridge Engineer is required when the jointless philosophy cannot be achieved using the Virginia Abutment (regardless of whether a Virginia Pier Cap is used).

When multiple units become necessary (i.e. a joint at pier/bent is introduced), the span configuration shall be such that the least number of joints is introduced and the selection algorithm shall be followed for the abutment type. See below for a conceptual illustration of the span configuration desired when a joint becomes necessary.

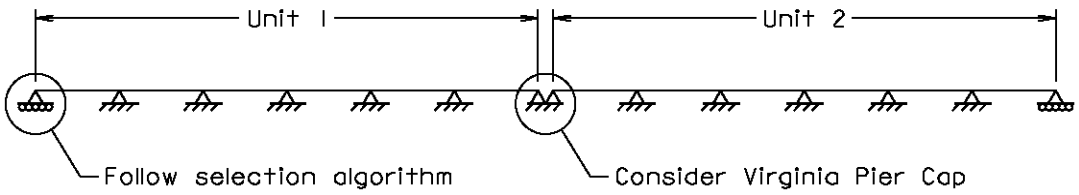

ABUTMENT PIERS ABUTMENT

SELECTION CRITERIA FOR FULL INTEGRAL ABUTMENTS, SEMI-INTEGRAL ABUTMENTS AND CONVENTIONAL CANTILEVER ABUTMENTS WITH DECK SLAB EXTENSIONS FOR SINGLE SPAN AND CONTINUOUS BRIDGES (WITHOUT JOINTS):

The total bridge length (without joints) from abutment to abutment and total movement at abutments shall not exceed the following:

	FULL INTEGRAL STRAIGHT	SEMI-INTEGRAL STRAIGHT	CONVENTIONAL CANTILEVER ABUTMENT WITH DECK SLAB EXT.	
			STRAIGHT	CURVED
Steel bridges	300 feet for 0° skew 150 feet for 30° skew	450 feet 30° max. skew	450 feet 45° max. skew	300 feet 30° max. skew
Concrete bridges	500 feet for 0° skew 250 feet for 30° skew	750 feet 30° max. skew	750 feet 45° max. skew	n/a
Total movement at abutment	$1^1/_2$"	$2^1/_4$"	$2^1/_4$"	$1^1/_2$"

In the table above, straight and curved refer to the beams/girders, not to the alignment.

The total movement at abutment is for the full temperature range (expansion and contraction). Interpolate maximum length for skews between 0° and 30° where ranges are shown in the table.

The maximum span length for single span is 160 feet for full integral bridges. Total integral abutment height (finished grade to bottom of footing) shall not exceed 17 feet.

Where a particular abutment type is recommended in conflict with the selection hierarchy and/or beyond the limits of the selection criteria indicated above, the design waiver request will include, but is not limited to, the relevant content listed on the following sheet.

When beyond the limits of the selection criteria indicated above for full integral abutments, semi-integral abutments or conventional cantilever abutments with deck slab extensions and the decision is made not to pursue a design waiver, Virginia Abutments shall be used.

For bridges with non-parallel beams/girders, the designer shall submit a design approval request for the recommended abutment type to the District Structure and Bridge Engineer.

For straight beam/girder bridge layout and length limitations for full integral, semi-integral and conventional cantilever abutments with deck slab extensions, see figures below.

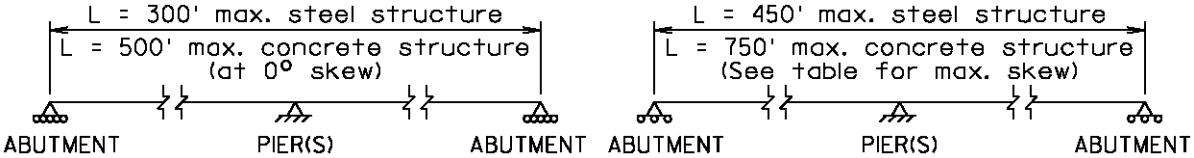

FULL INTEGRAL SEMI-INTEGRAL/ DECK SLAB EXTENSION

BRIDGE LAYOUT AND LENGTH LIMITS

Legend:

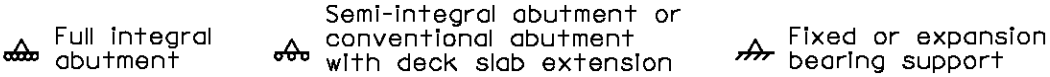

Examples of bridge layouts not meeting the above criteria including reasons are provided on File Nos. 17.01-12 (steel) and -13 (concrete).

DESIGN WAIVER CONTENT FOR ABUTMENT TYPE:

Examples of specific content required for design waiver requests include:

- Considerations affecting selection such as site and geotechnical conditions, scour, design, constructability, future maintenance and any other factors as necessary.
- Calculations/details showing how lateral forces will be accommodated.
- If uplift is expected, how it will be dealt with.
- For staged construction, whether temporary restraints are necessary to resist lateral forces as rub plates will only exist on one side during construction.
- Impact of thermal forces to the superstructure based on the abutment type for bridges with lengths or skews beyond the established criteria (i.e., whether forces will need to be considered in the superstructure design, affected components and likely impact on design).
- Impact of thermal forces to the substructure based on abutment type for bridges with lengths or skews beyond the established criteria. As an example, relatively high skew angles can result in a pronounced tendency of semi-integral superstructures to rotate in the horizontal plane generating higher than anticipated horizontal earth pressure acting on the abutment.

Based on the abutment type and the degree to which the actual criteria exceeds the established criteria, 3-D analysis may be required to determine thermal forces for superstructure and/or substructure to assess the items listed in the bullets above or any other factors as necessary.

STEEL BRIDGE LAYOUT EXAMPLES:

The following examples of bridge layouts do not meet the guidelines for full integral or semi-integral and conventional shelf/cantilever abutments with deck slab extensions (assume 0° skew):

Legend:

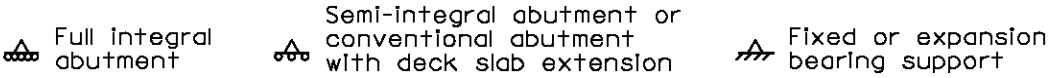

REASON

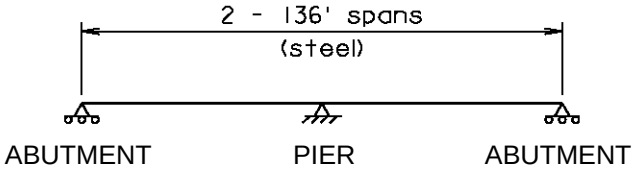

Semi-integral abutments or conventional abutments with deck slab extensions are depicted in the example. The total length of 272' meets the full integral limit for steel superstructures. Full integral abutments are required unless other selection criterion forces a move to the next abutment type in the selection hierarchy.

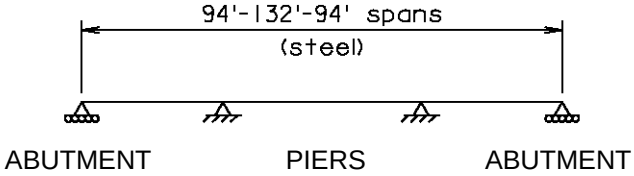

The total length of 320' exceeds the full integral limit for steel superstructures. Either a design waiver may be sought to extend use past the limit or semi-integral abutments or conventional abutments with deck extensions shall be used.

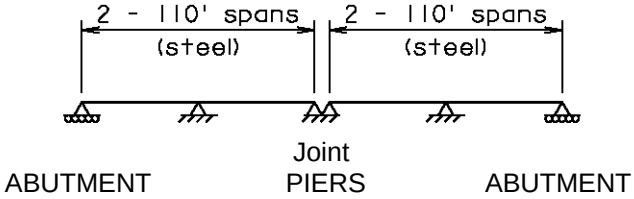

Joints are not allowed (unless a waiver is granted) and either semi-integral abutments or conventional abutments with deck extensions shall be used.

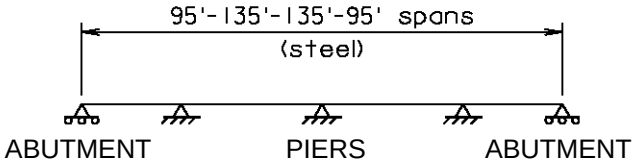

The total length of 460' exceeds the limit for steel superstructures for semi-integral abutments and conventional abutments with deck extensions. A design waiver is required for extending use past the limit or Virginia Abutments shall be used.

See File No. 17.01-10 for discussion on bridge layout when introduction of a joint is necessary.

CONCRETE BRIDGE LAYOUT EXAMPLES:

The following examples of bridge layouts do not meet the guidelines for full integral or semi-integral and conventional shelf/cantilever abutments with deck slab extensions (assume 0° skew):

Legend:

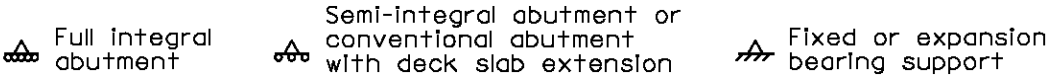

REASON

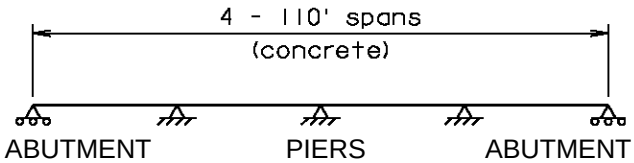

Semi-integral abutments or conventional abutments with deck slab extensions are depicted in the example. The total length of 440' meets the full integral limit for concrete super-structures. Full integral abutments are required unless other selection criterion forces a move to the next abutment type in the selection hierarchy.

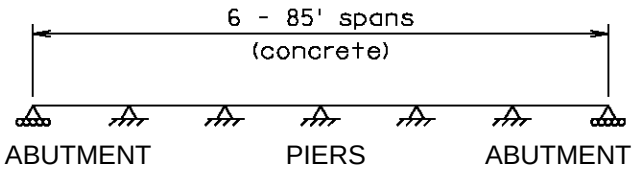

The total length of 510' exceeds the full integral limit for concrete super-structures. Either a design waiver may be sought to extend use or semi-integral abutments or conventional abutments with deck extensions shall be used.

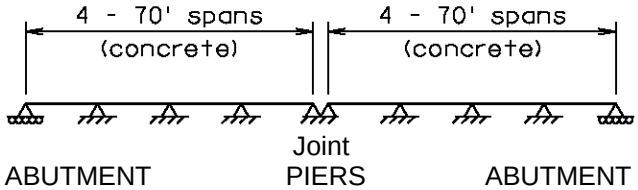

Joints are not allowed (unless a waiver is granted) and either semi-integral abutments or conventional abutments with deck extensions shall be used.

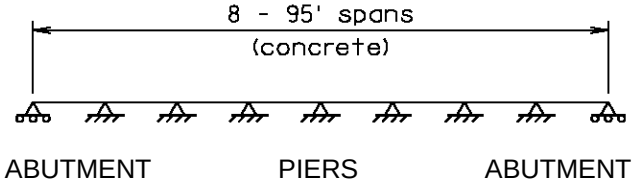

The total length of 760' exceeds the limit for concrete superstructures for semi-integral abutments and conventional abutments with deck extensions. A design waiver is required for extending use past the limit or Virginia Abutments shall be used.

See File No. 17.01-10 for discussion on bridge layout when introduction of a joint is necessary.

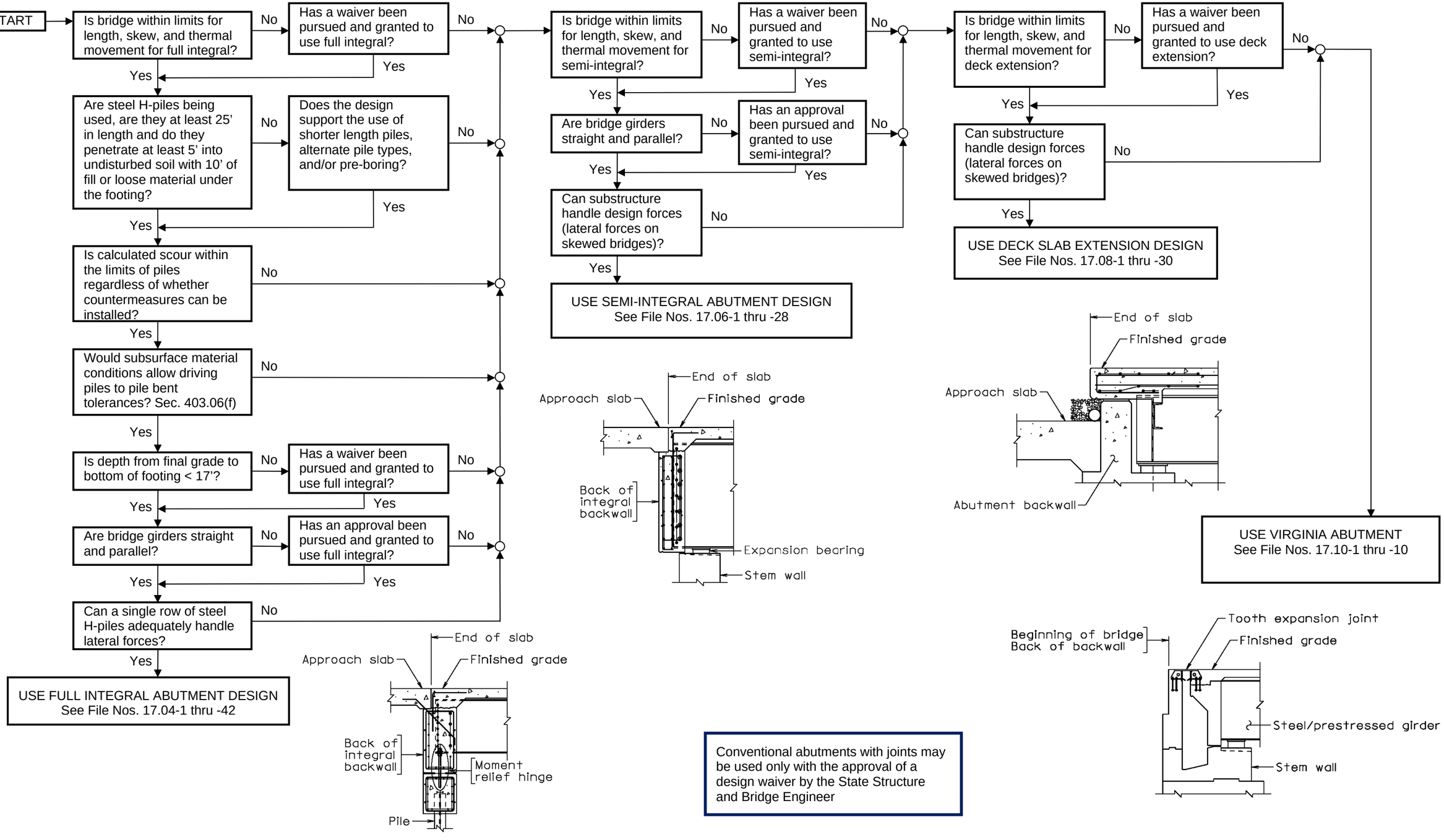

ABUTMENTS
GENERAL INFORMATION AND SELECTION CRITERIA
SELECTION ALGORITHM

PART 2
DATE: 18May2016
SHEET 14 of 16
FILE NO. 17.01-14

GENERAL GUIDELINES FOR INTEGRAL ABUTMENTS:

BRIDGE LAYOUT:

A symmetrical or near symmetrical layout is recommended in order to have the same movement at each abutment to balance the passive forces. For layouts with:

- An even number of continuous spans, consider fixed bearings at the center pier.
- An odd number of continuous spans, consider fixed bearings at both center piers.
- Continuous spans, the designer shall determine the number and location of fixed bearing lines to obtain a satisfactory and efficient bridge design. See File Nos. 15.04-1 thru -12 for additional bridge layout guidance.
- Continuous spans, at least one line of fixed bearings is required unless the bridge grade does not exceed 1%.
- Simple span semi-integral bridges, use expansion bearings at both abutments in all cases.

EXPANDED POLYSTYRENE (EPS) MATERIAL:

For single span bridges on a gradient, EPS shall be used at the upgrade abutment (highest elevation) only, which will result in most of the movement going towards the upgrade abutment. On single span bridges with no grade differential, the designer shall arbitrarily specify which abutment will receive the EPS material or use engineering judgment if outside factors are present.

For continuous spans, EPS material shall be used at all full integral and semi-integral abutments.

For EPS thickness calculations and details, see File No. 17.03.30.

BACKWALLS:

Backwalls shall be designed (moment and shear) to resist passive earth pressure that will result from thermal movements. A K_P of 4 shall be used with EPS material. For single span integral bridges where EPS material is used at only one abutment, a K_P of 4 shall be used for the design of both ends.

When a design approval is approved by the District Structure and Bridge Engineer to eliminate the EPS material, a geotechnical engineer shall determine the appropriate value of K_P, but in no case shall it be less than 4. When structural backfill is used without EPS material at either abutment, a K_P value of 12 shall be used.

Backfill material for integral bridges shall be placed such that the differential in the height of fill at each abutment does not exceed 6” and so denoted on the plans.

BEAM/GIRDER DESIGN:

Prestressed concrete beams and steel beams/girders shall be designed assuming the ends at the abutments are free to rotate.

APPROACH SLABS:

If at grade approach slabs are used, the joint between the approach slab and sleeper pad shall be sized for the thermal movement.

TERMINAL WALLS:

To eliminate potential conflicts, the designer shall detail the parapet terminal walls to be entirely on the superstructure. Care shall be taken to preserve the structural integrity of the railing/ parapet system. The guardrail attachment to the terminal wall must allow for end movements and end rotation.

FULL INTEGRAL ABUTMENT LAYOUT GUIDELINES:

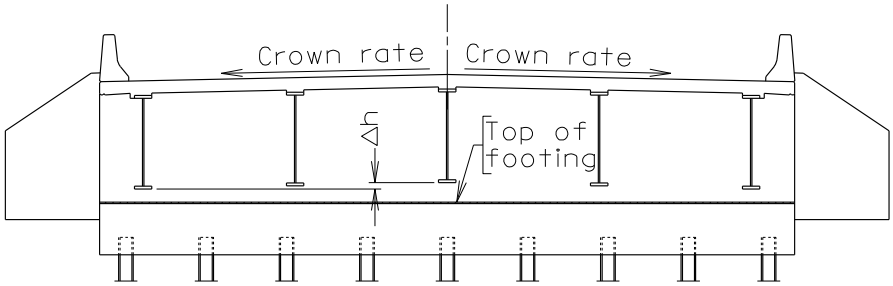

TRANSVERSE SECTION
Crowned

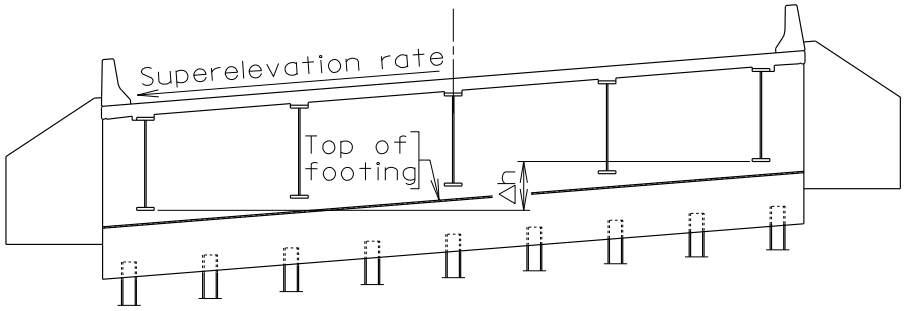

TRANSVERSE SECTION
Superelevated

If Δh is less than 12”, the bottom of the footing shall be constructed level, and the difference in elevation will be compensated for above the hinge. If Δh exceeds 12”, the bottom of the footing shall be sloped. In the case of a crowned section, in which Δh exceeds 12”, it may be necessary to add a longitudinal joint through the superstructure and the entire integral abutment. The longitudinal joint shall be located in the median. In the absence of a median, a semi-integral bridge should be considered.

Details on this sheet apply to both steel and concrete structures.

GENERAL INFORMATION:

The design of an abutment consists of two principle parts: the evaluation of loads and pressures that act on the structure and the design of the structure to withstand these loads and pressures within acceptable tolerable deformations.

All abutments and wingwalls shall be investigated for the following:

- Lateral earth and water pressures
- Dead load weight of the abutment/wall
- Vehicular or other impact loading
- Loads applied from the superstructure
- Temperature and shrinkage deformation effects
- Seismic loads

The design shall be investigated for any combination of forces which may produce the most severe loading condition.

CONCRETE:

Concrete used in the design of abutments shall be Class A3 having a minimum 28 day compressive strength of 3000 psi.

Concrete used in parapets/rails, terminal walls on abutments and in the construction of the integral backwalls of full integral, semi-integral and Virginia abutments shall be Low Shrinkage Class A4 Modified having a minimum 28 day compressive strength of 4000 psi and shall be included in the concrete quantities for the superstructure.

REINFORCEMENT:

All reinforcement shall conform to the requirements of Sections 223 and 406 of the current VDOT *Road and Bridge Specifications* and as specified below.

All reinforcement for the structural elements listed in the current IIM-S&B-81 shall be corrosion resistant reinforcing (CRR) steel bars of the Class indicated.

CRR steel bars shall conform to the applicable specification listed in the current IIM-S&B-81 for the type of CCR steel bar used.

Deformed reinforcing bars shall conform to the requirements of ASTM A615, Grade 60 except for reinforcing bars noted to be CRR.

REINFORCEMENT (Cont.'d):

Plain steel bars when used as dowels shall conform to the requirements of ASTM A36.

For specific practices and requirements (sizes, spacings and miscellaneous details), refer to the appropriate section(s) of this chapter.

GENERAL DESIGN CONSIDERATIONS:

Abutments should be designed with and without the superstructure in place as well as any additional construction loading that may occur such as live load surcharge. If the abutment is not stable (normally without the superstructure being in place especially when checking pile batter on the toe pile), one of the following notes shall be added to the abutment plan sheet:

> Do not fill above elevation XXX.XX until superstructure is in place.
>
> or
>
> Do not fill above elevation XXX.X until superstructure including concrete deck slab is in place.

Fill in front of the abutment is generally not considered in design calculations for an abutment adjacent to a stream as there is a possibility of the fill being removed during flooding events.

GENERAL DRAINAGE DESIGN PRACTICES AND DETAILS:

For specific practices and details for abutment drainage, refer to the appropriate section of this chapter.

For specific practices for the placement (location) of deck slab drainage collector/downspout pipes on abutments, see Chapter 22, Drainage, File Nos. 22.04-1 and -2.

GEOTECHNICAL DESIGN DATA TABLES:

The appropriate geotechnical design data shall be provided in tabular format either on abutment and pier sheets or combined near the front of the plan assembly (possibly on the sheet with the Substructure Layout). The General Notes shall reference the location(s).

For use with Spread Footings:

SPREAD FOOTING DATA TABLE				
	SERVICE		STRENGTH	
Substructure Unit	Nominal Bearing Resistance (tsf)	Tolerable Settlement (inches)	Nominal Bearing Resistance (tsf)	Factored Bearing Resistance (tsf)
.	.	.	.	.
.	.	.	.	.

The (___) Limit State controls the footing design.

For use with Drilled Shafts:

DRILLED SHAFT DATA TABLE			
Substructure Unit	Nominal Axial Resistance (Tons/shaft)	Factored Axial Resistance (Tons/shaft)	Minimum Tip Elevation
.	.	.	.
.	.	.	.

The (___) Limit State controls the drilled shaft design.

The "Minimum Tip Elevation" column in this table should be omitted, if a design requirement that does not involve the tip elevation is being used. One such example would be the case in which the drilled shaft must be embedded a minimum length into competent rock.

For use with Pile Foundations or Bents:

PILE DATA TABLE			
Substructure Unit	Nominal Axial Resistance Measured During Driving (Tons/pile)	Factored Axial Resistance (Tons/pile)	Estimated Tip Elevation
.	.	.	.
.	.	.	.

The (___) Limit State controls the pile design.

The resistance factor used to define the relationship between the nominal and factored axial resistances is dependent on the method indicated in the General Notes used to measure the nominal axial resistance during driving.

Where estimated tip elevations vary from one side of a substructure unit to the other (e.g., due to sloping rock), provide the range in the table.

Where minimum tip elevation is required:

PILE DATA TABLE				
Substructure Unit	Nominal Axial Resistance Measured During Driving (Tons/pile)	Factored Axial Resistance (Tons/pile)	Estimated Tip Elevation	Minimum Tip Elevation
.	.	.	.	.
.	.	.	.	.

The (___) Limit State controls the pile design.

ARCHITECTURAL TREATMENT FOR ABUTMENTS:

The decision to incorporate architectural treatment into a bridge project and the type of treatments shall be made during the preliminary design. Incorporating or removing architectural treatments from a project at a later stage could require re-design and plan changes including quantities.

Including architectural treatment on parapet/rails and/or abutments may affect geometric items such as horizontal clearances. Architectural treatment on parapets/rails and/or abutments will affect abutment widths and quantities. Designers must consider the texture relief to be sacrificial and position reinforcement to provide the minimum concrete cover required from the back of the maximum relief used to the reinforcement. Structural coordination between elements is required as the maximum texture relief is 1" on parapets/rails and 3" on substructure elements. Copings may need additional reinforcement to include in plan details. Architectural treatments such as medallions have minimum dimensions that need to be considered when locating abutments to provide sufficient exposed area (e.g., on U-back wingwalls) where those treatments are desired.

See Chapter 5 of this manual for requirements, details and information for architectural treatment.

GENERAL INFORMATION:

This section of the chapter establishes the general practices and guidelines for the design and detailing of abutments and related structures.

Items in blocks are for designer's information only and are not to be placed on the plans.

ABUTMENT NEAT COMPONENT DETAILS:

BACKWALL DETAILS:

Bridges requiring approach slabs or where approach slabs are desirable, the abutment backwall shall be detailed as shown below. See also Deck Slab Extension section of this chapter.

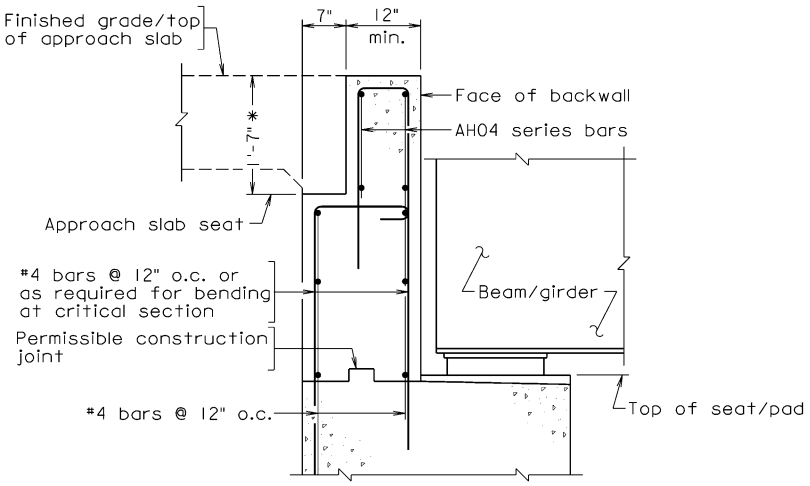

ABUTMENT BACKWALL W/ APPROACH SLAB AT FINISHED GRADE

***** The dimension shown above is for approach slabs without bituminous concrete overlay. For approach slabs with bituminous concrete overlay, use 1'-9".

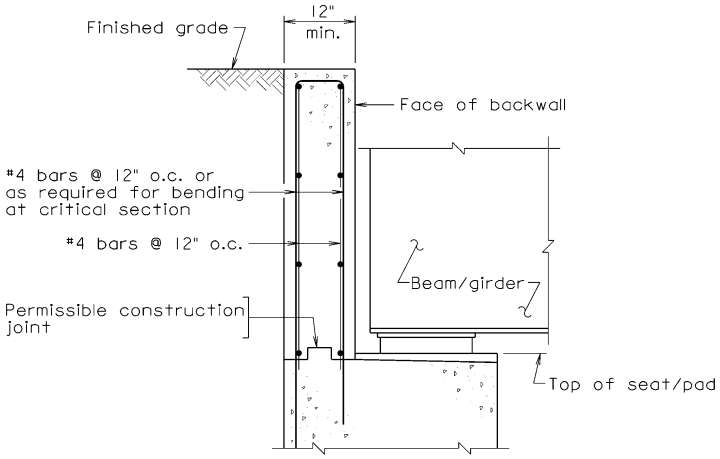

ABUTMENT BACKWALL W/O APPROACH SLAB

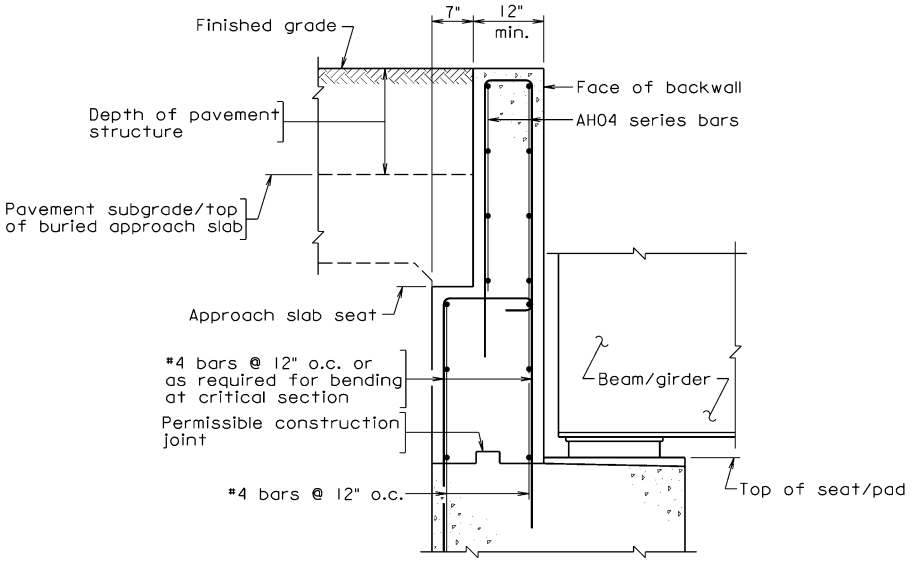

ABUTMENT BACKWALL W/BURIED APPROACH SLAB

BACKWALL CLEARANCE FOR BEAMS/GIRDERS:

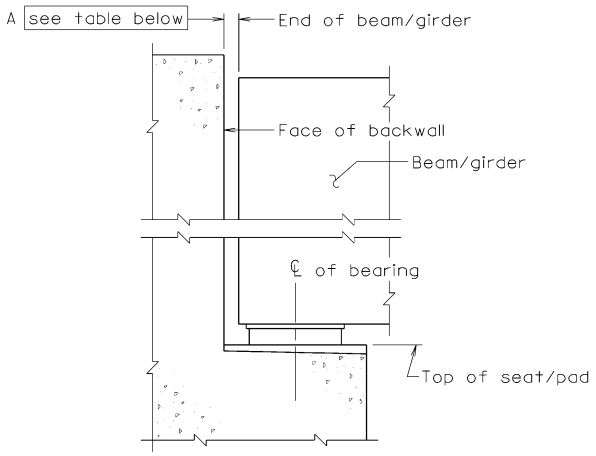

ELEVATION

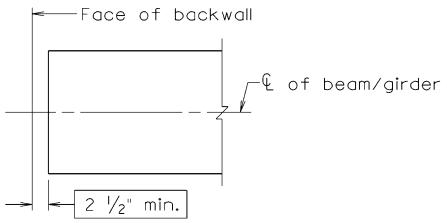

PART PLAN – NO SKEW

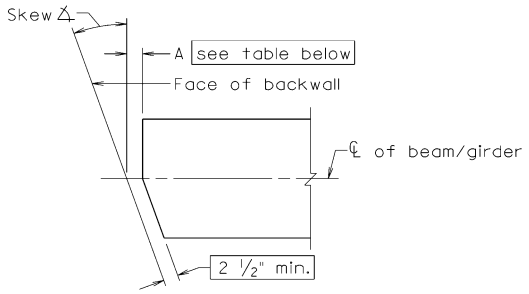

PART PLAN – WITH SKEW

SKEW ANGLE	A *
≤ 10°	$2^1/_2$"
11° thru 30°	$3^1/_2$"
31° thru 45°	$4^1/_2$"
46° thru 60°	$5^1/_2$"

***** Expansion from extremely long span or a group of continuous span beams/girders may require that this dimension be increased in order to provide a minimum clearance (normal to face of backwall) of $1^1/_2$" at full expansion.

STEM DETAIL:

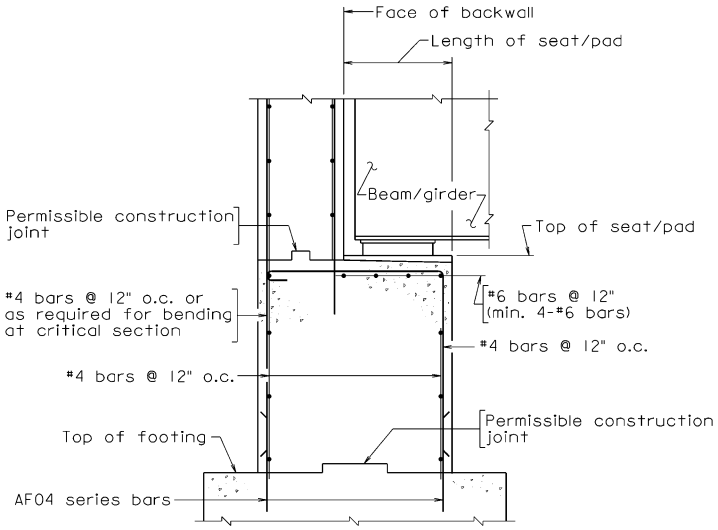

ABUTMENT STEM DETAIL

Stem shall be a minimum of 1'-7" in height and provide a minimum 1'-3" clearance between the bottom of the beam/girder and the ground surface or top of the slope protection to ensure accessibility for safety inspections and maintenance operations.

SEAT/PAD DETAILS:

The minimum seat/pad length (face of backwall to edge of stem) and width shall be 2'-0". The bridge seat/pad shall be wide and long enough to accommodate the bearing device and seismic requirements. It is recommended that the width of seat/pad be established in increments of 6".

For masonry plate/anchor bolt edge clearance requirements that may affect the bridge seat/pad width, see File No.17.03-7.

Typical bridge seat layouts used by the Structure and Bridge Division are as shown below:

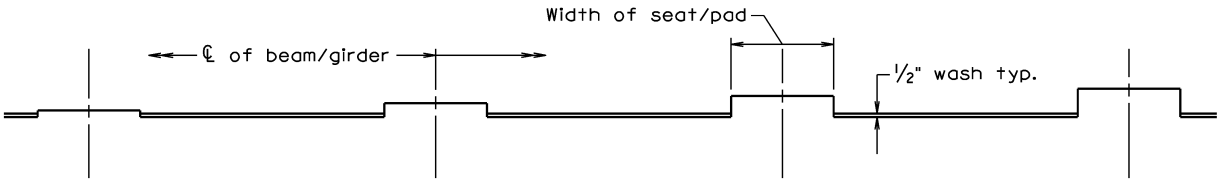

STEPPED SEATS/PADS

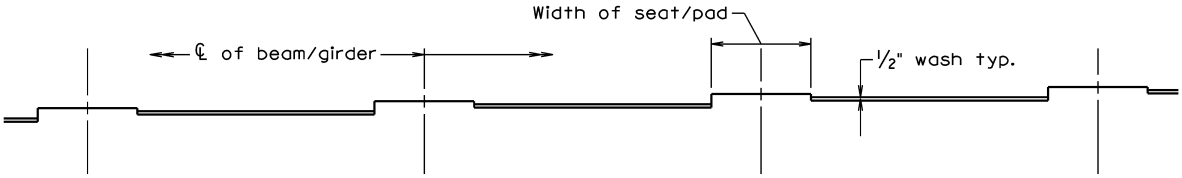

INDIVIDUAL SEATS/PADS
(PREFERRED)

The minimum bridge seat reinforcement shall be as shown on the details below:

- For main reinforcement < 5” below the top of seat/pad:

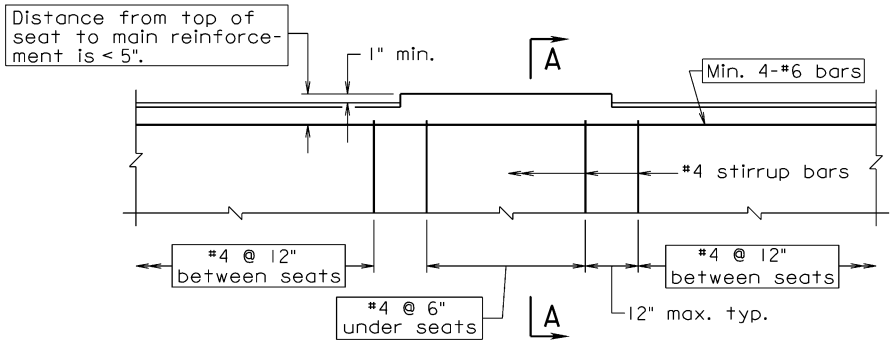

PART ELEVATION – BRIDGE SEAT/PAD

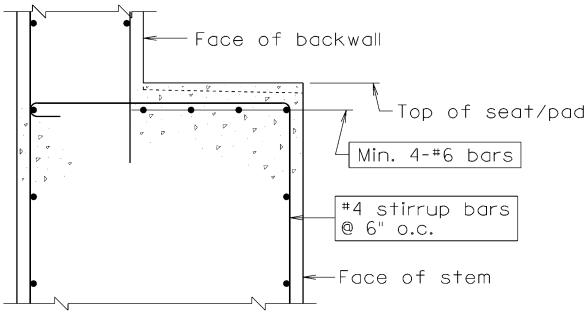

SECTION A-A

- For main reinforcement ≥ 5” below the top of seat/pad:

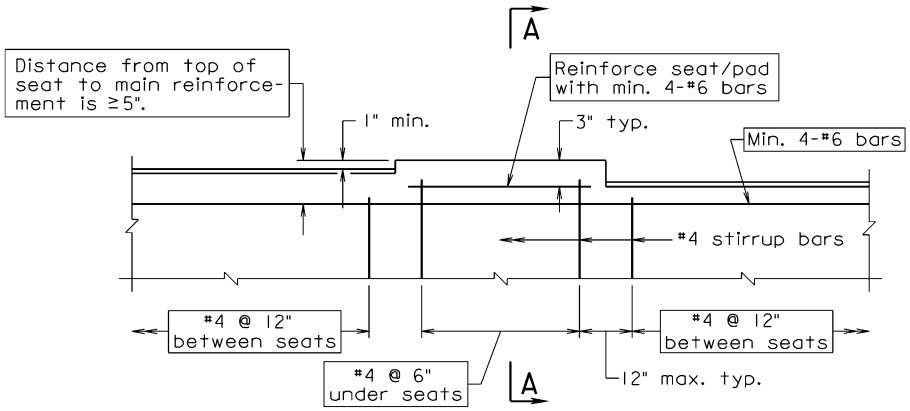

PART ELEVATION – BRIDGE SEAT/PAD

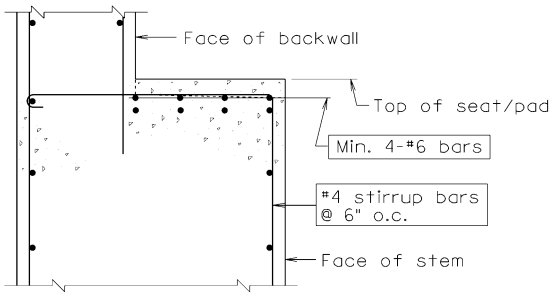

SECTION A-A

WASH DETAIL:

The purpose of the wash is to provide drainage of moisture from the abutment seat. A $^{1}/_{2}$” wash shall be provided between seats/pads.

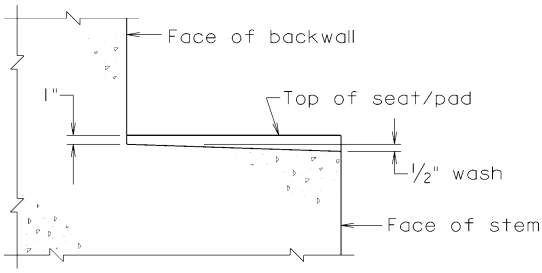

WASH DETAIL

ANCHOR BOLT LAYOUT DETAILS:

The abutment seats/pads shall be wide enough to provide for the clearances shown on the details below.

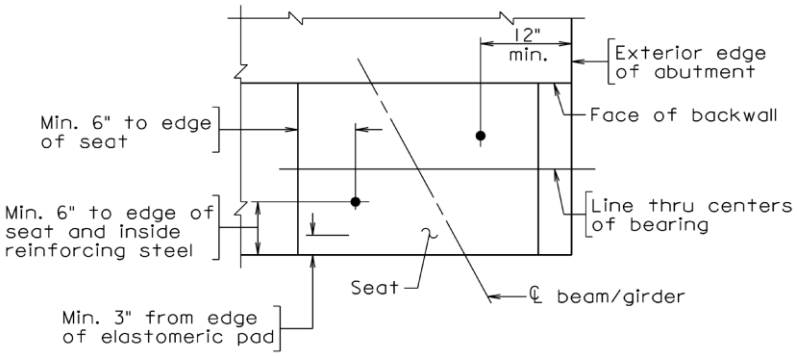

ANCHOR BOLT CLEARANCES

When beams/girders have bearings requiring anchor bolts, a TYPICAL ANCHOR BOLT LAYOUT detail shall be shown on the abutment detail sheets of the plan assembly.

Show dimensions in multiples of $^{1}/_{8}$".

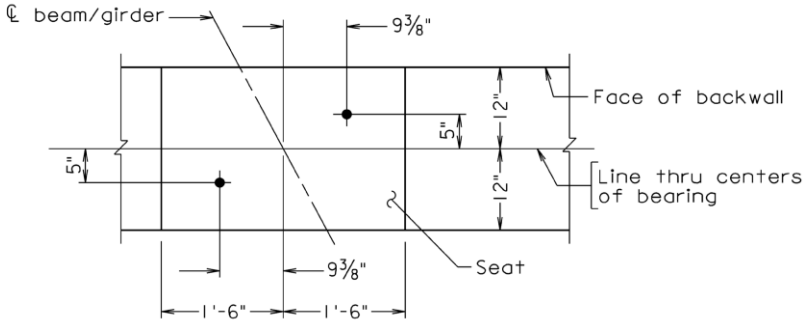

TYPICAL ANCHOR BOLT LAYOUT DETAIL

ABUTMENT U-BACK WINGWALL DETAILS:

- **For U-Back Wingwall Heights ≤ 10'-3":**

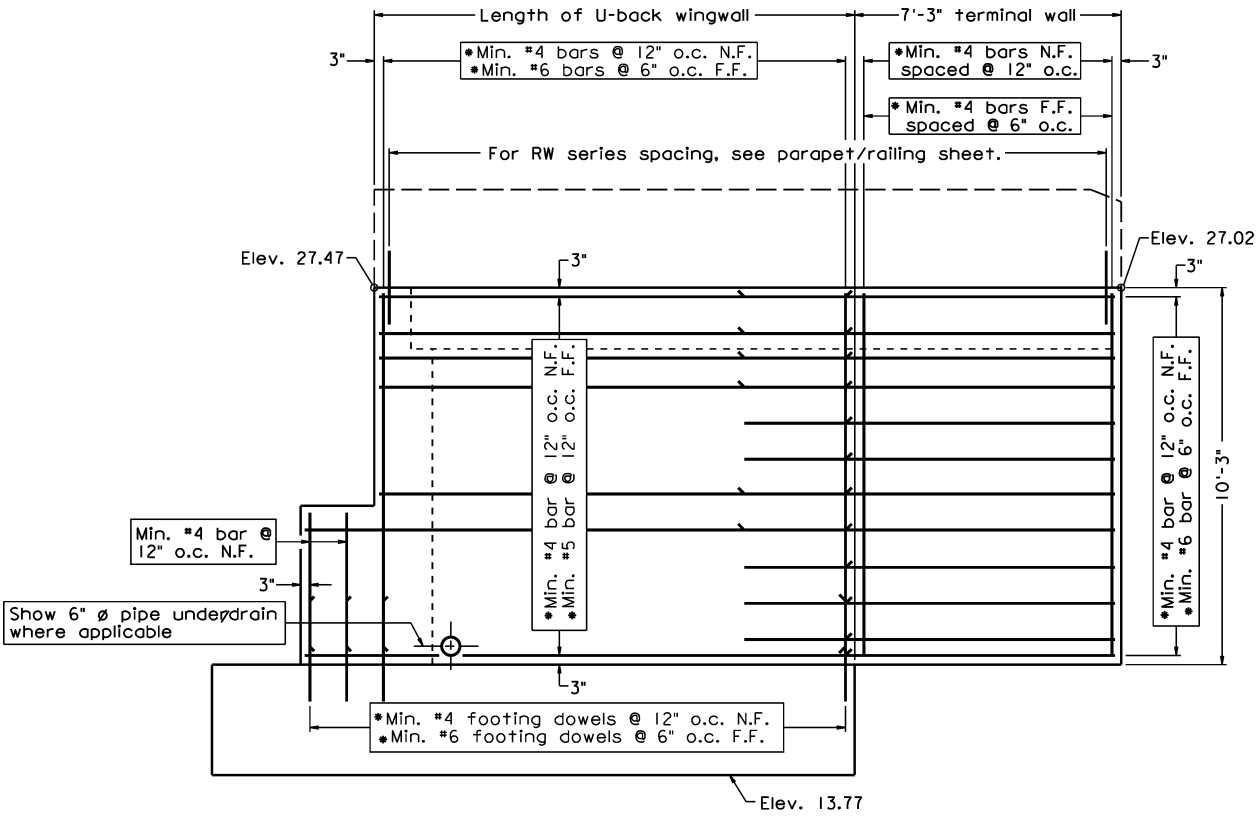

VIEW B-B

*Or as required for bending at critical section.

- **For U-Back Wingwall Heights > 10'-3":**

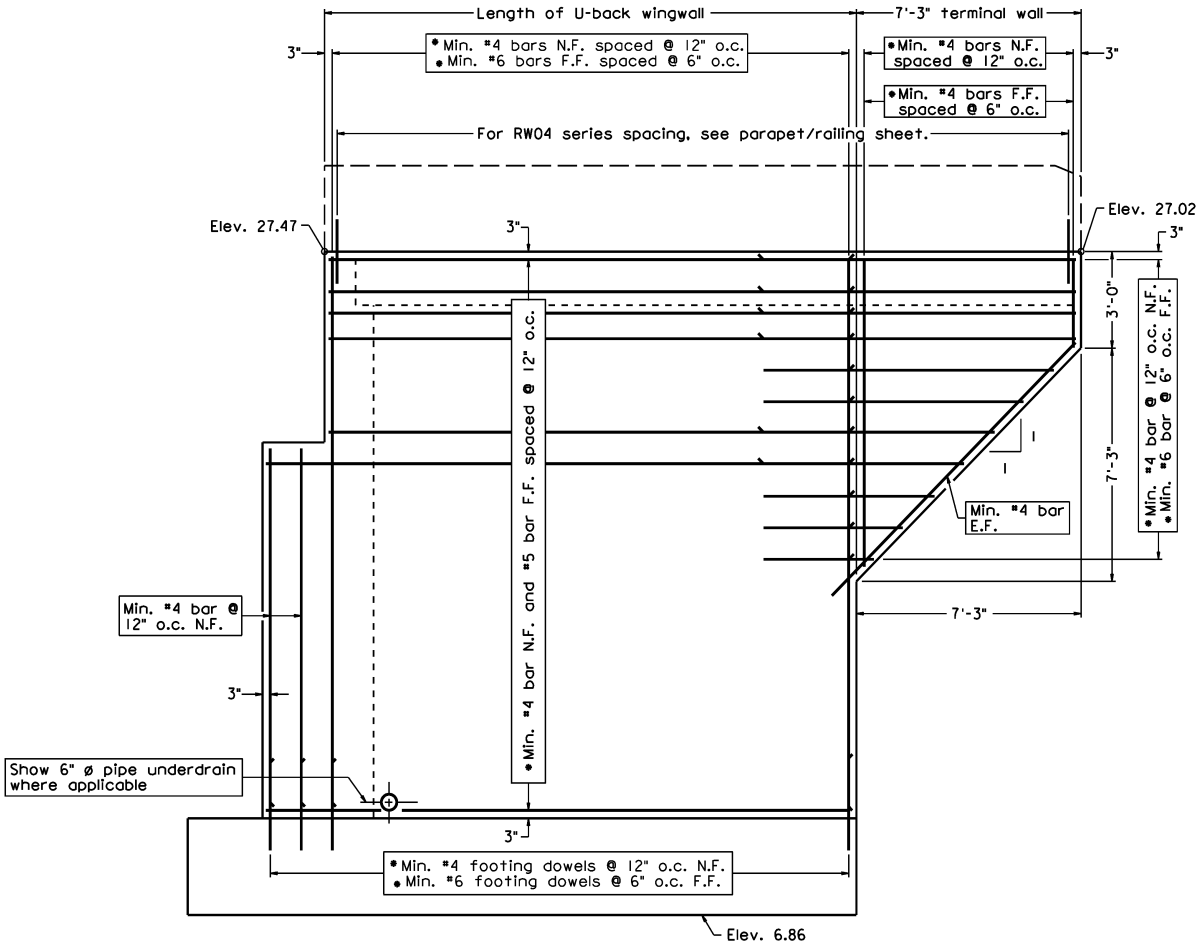

VIEW B-B

*Or as required for bending at critical section.

ABUTMENT ELEPHANT EAR WINGWALL DETAILS:

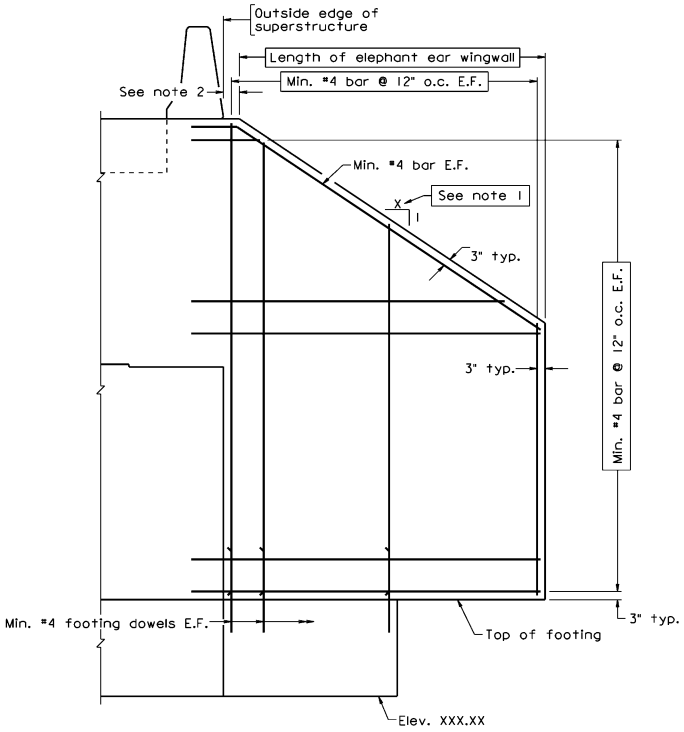

ELEVATION
(PREFERRED)

1. Slope of top of elephant ear wingwall shall match the approach fill side slope (1.5 or 2.0 to 1).

2. The distance from outside edge of abutment to beginning of elephant ear wingwall shall be 6". Extend backwall as required to accommodate the detail requirements for skewed abutments and conventional abutments with deck slab extensions.

3. Length of elephant ear wingwall required shall be dimensioned on the abutment wingwall details.

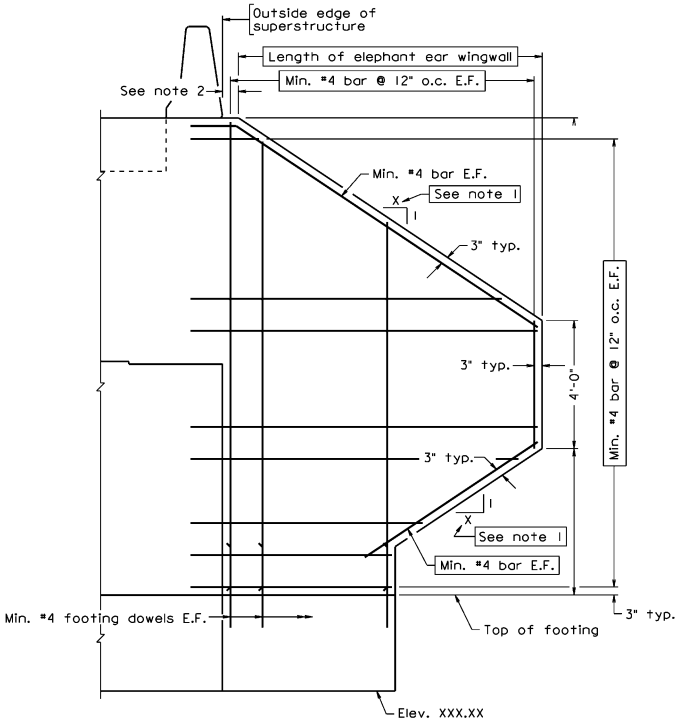

ELEVATION
(ALTERNATE)

4. Slope of top of elephant ear wingwall shall match the approach fill side slope (1.5 or 2.0 to 1).

5. The distance from outside edge of abutment to beginning of elephant ear wingwall shall be 6". Extend backwall as required to accommodate the detail requirements for skewed abutments and conventional abutments with deck slab extensions.

6. Length of elephant ear wingwall required shall be dimensioned on the abutment wingwall details.

ABUTMENT FOOTING TYPES AND DETAILS:

GENERAL INFORMATION:

The footing types for abutments are as follows:

- Spread footings
- Footings on steel piles
- Footings on prestressed concrete piles
- Footings on drilled shafts

The specific type of foundation selected for use on a project shall be determined based on available geotechnical and hydraulic data/recommendations and costs.

Minimum depth for all footings shall be 3'-0". Minimum depth of subfooters shall be 6" and should have no irregular feather edges.

SPREAD FOOTINGS:

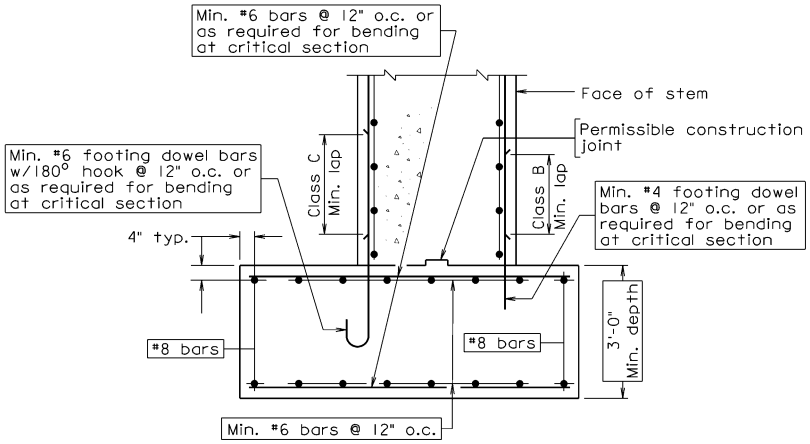

SECTION THROUGH SPREAD FOOTING

Spread footings shall be proportioned and designed such that the supporting soil or rock provides adequate nominal resistance against geotechnical and structural failure.

Spread Footing Plan:

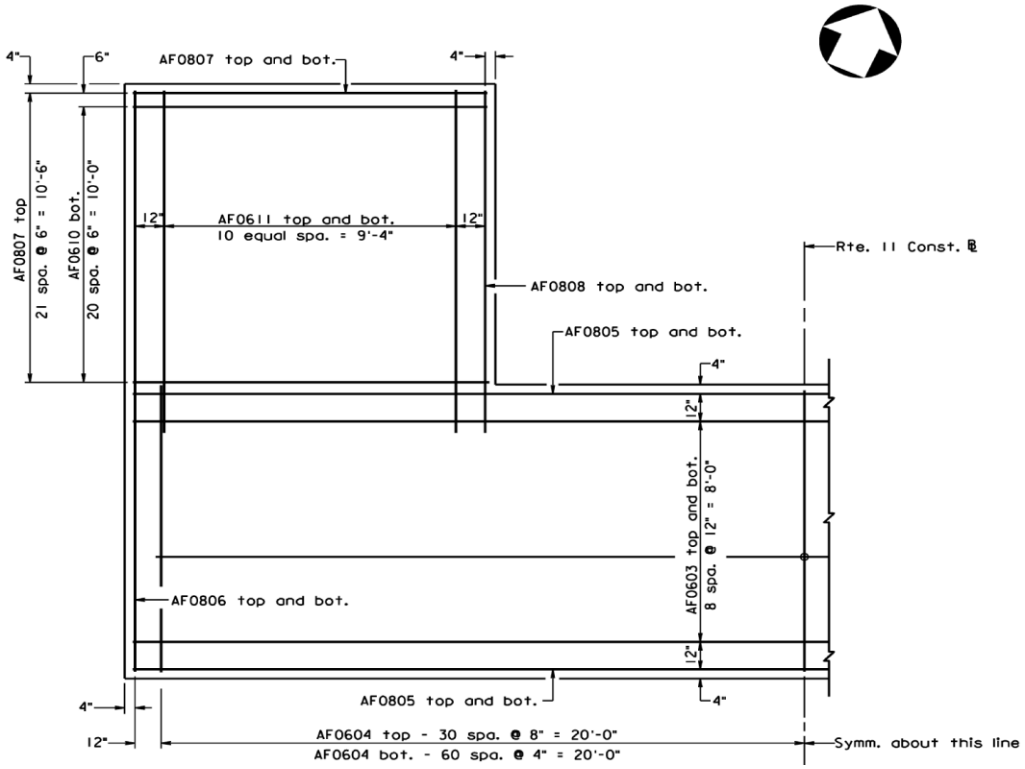

PART FOOTING REINFORCEMENT PLAN

The PART FOOTING REINFORCEMENT PLAN shown above is for illustration purposes only to show the general requirements for detailing a typical abutment spread footing. The “full” plan shall be shown on the abutment detail sheet(s) and shall include the dimensions of the footing as well as the size and spacing of reinforcing steel in the footing.

The outline of the footing in the FOOTING REINFORCEMENT PLAN is shown with solid lines.

A tie (reference) point and the location of the face of abutment backwall/end of slab shall be shown. The tie (reference) point is the intersection of the route ℄ or ℄ and the face of abutment backwall/end of slab. This tie (reference) point shall be the same as that used for the title sheet (plan view) and substructure layout. For the part plan shown above, the tie point is the intersection of the construction ℄ for Rte. 11 and the face of abutment backwall.

The layout (dimensioning) of the footing shall be referenced to this tie point and the face of abutment backwall/end of slab.

FOOTINGS ON PILES:

Spacing of Piles:

- Steel H-piles: not less than 3.5 x nominal size of the piles when used as friction piles

  not less than 2'-6" when used as bearing piles

- Concrete piles: not less than 3 x diameter or side dimension of the piles

- Timber piles: not less than 2'-6"

Maximum spacing of piles: 10'-0".

Pile should be spaced at 1" increments.

Edge distance of piles: The distance from the side of any pile to the nearest edge of the footing/cap shall not be less than 9".

Pile batter: Minimum batter 3:12; maximum batter 4:12.

Pile driving tolerance: Driving tolerance(s) for piles shall be considered when determining bending and shear at the critical section. For driving tolerance(s), see VDOT *Road and Bridge Specifications*, Section 403 and Table IV-1. Driving tolerance(s) for Full Integral abutments shall be in accordance with column supports for bent caps.

Embedment of piles in caps/footings:

- Steel piles: 12" into footing
  18" into footing when subjected to intermittent uplift (under any loading)
  18" into footing plus a positive method of anchoring the pile to the footing when subject to uplift under seismic loading

- Concrete piles: 6" into footing with reinforcement projecting from pile to obtain development as required by the design

- Timber piles: 12" into footing

FOOTINGS ON DRILLED SHAFTS:

Edge distance of drilled shafts: The distance from side of any shaft used in a group to nearest edge of the footing/cap shall not be less than 12".

Typical Details of Footings on Piles:

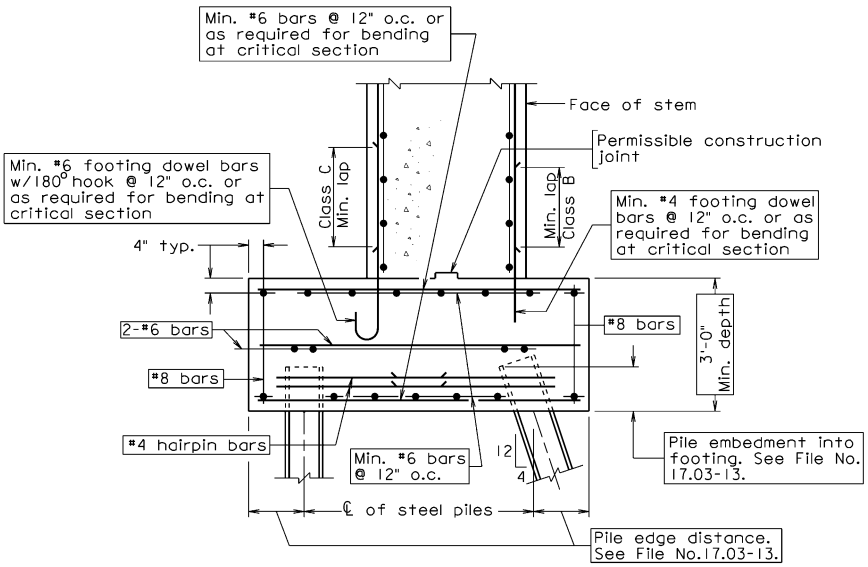

SECTION THROUGH FOOTING ON STEEL PILES

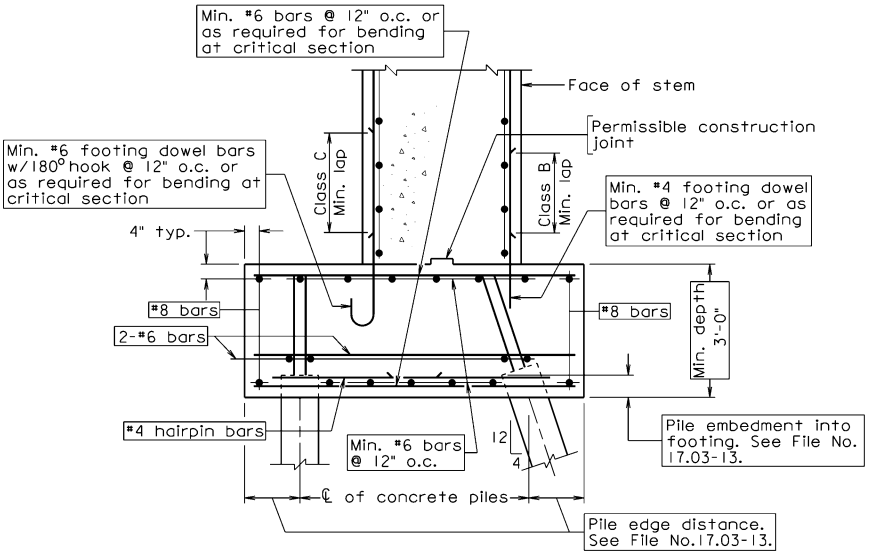

SECTION THROUGH FOOTING ON PRESTRESSED CONCRETE PILES

Footing Hairpin Bar Details:

- For single row of toe piles:

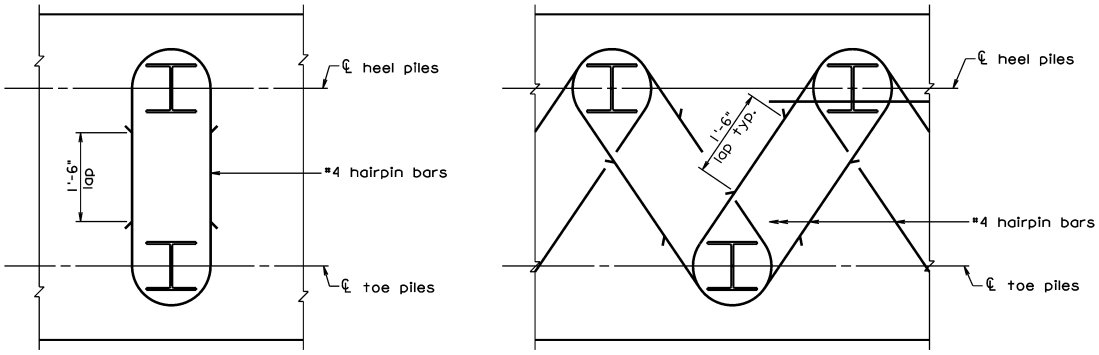

HAIRPIN DETAILS

- For multiple rows of toe piles:

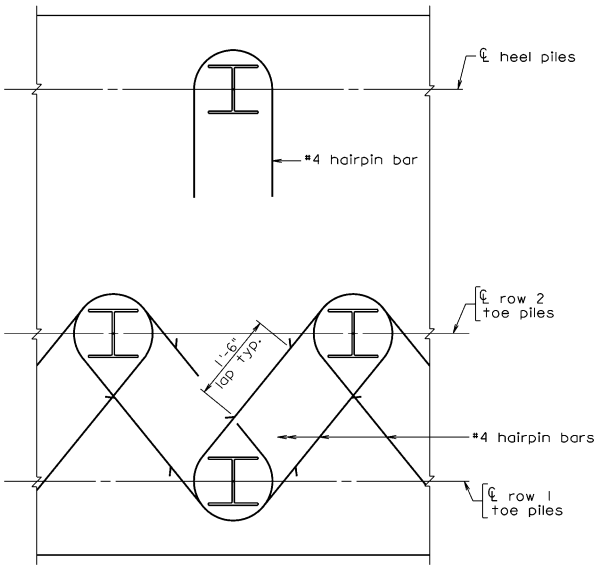

HAIRPIN DETAIL – MULTIPLE ROWS OF TOE PILES

Pin diameter for hairpin bars shall equal the nominal size of pile plus 6”.

Pile and Footing Reinforcement Plan:

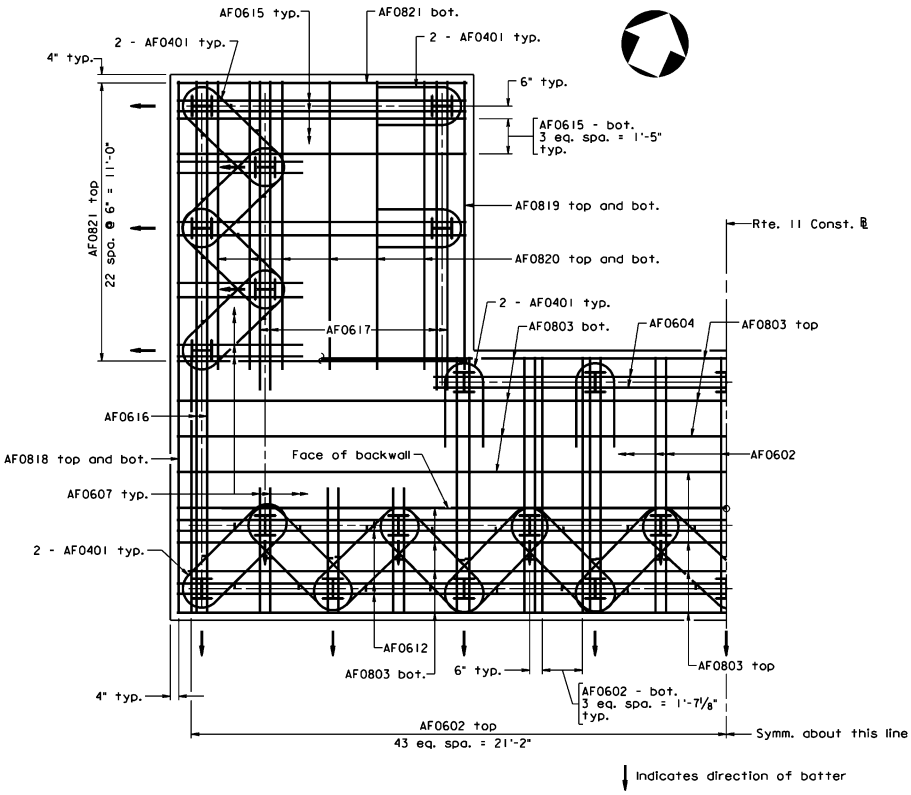

PART FOOTING REINFORCEMENT PLAN

Abutment detail sheets for foundations with piles will normally include a PILE AND FOOTING REINFORCEMENT PLAN in which details are shown for both the pile layout as well as the size and spacing of reinforcing steel in the footing.

The PART FOOTING REINFORCEMENT PLAN shown above is for illustration purposes only to show the general requirements for detailing a typical abutment footing on piles. The “full” plan shall be shown on the abutment detail sheets of the plan assembly and shall include the layout of piles as well. If the plan becomes too cluttered, a separate PILE PLAN as shown in File No. 17.03-18 may be used.

The outline of the footing in the PART FOOTING REINFORCEMENT PLAN is shown with solid lines.

A tie (reference) point and the location of the face of abutment backwall/end of slab shall be shown. The tie (reference) point is the intersection of the route ℄ or ℄ and the face of abutment backwall/end of slab. This tie (reference) point shall be the same as that used for the title sheet (plan view) and substructure layout. For the part plan shown above, the tie point is the intersection of the construction ℄ for Rte. 11 and the face of abutment backwall.

Pile Plan:

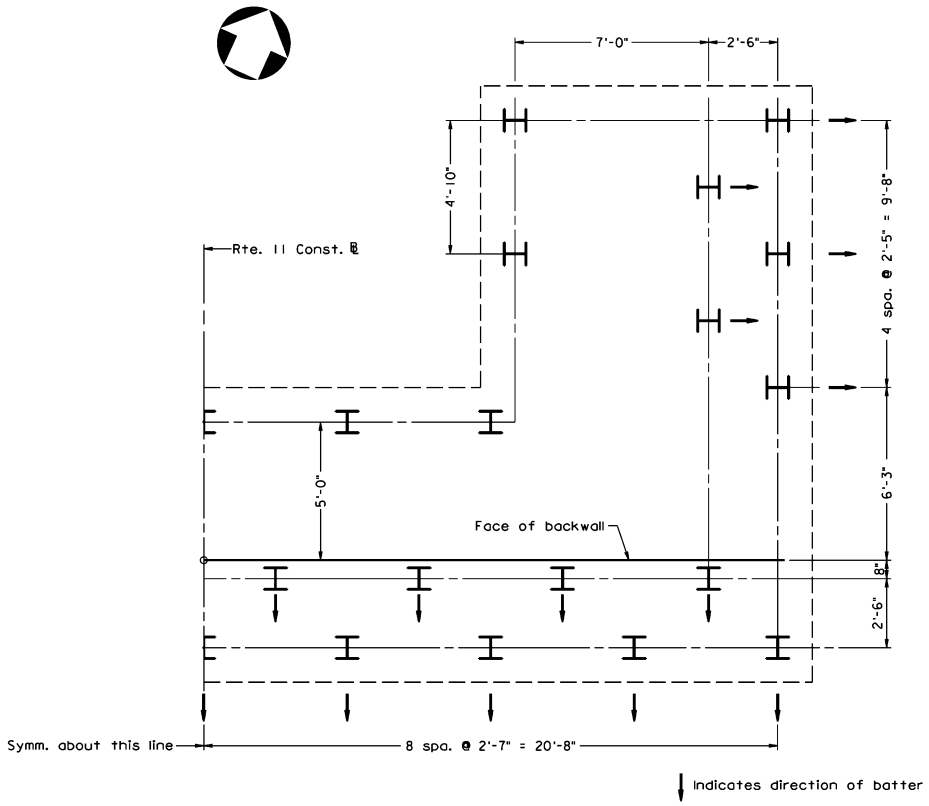

PART PILE PLAN

The outline of the footing in the PART PILE PLAN is shown with phantom lines. Dimensions to foundation edges should not be used as normally no dimensions are referenced to phantom lines.

A tie (reference) point and the location of the face of abutment backwall/end of slab shall be shown. This tie (reference) point shall be the same as that used for the title sheet (plan view) and substructure layout. For the part plan shown above, the tie point is the intersection of the construction ℄ for Rte. 11 and the face of backwall of the abutment.

The layout of piles (spacings and lines of piles) shall be referenced to the tie point and the face of abutment backwall/end of slab.

UTILITY BLOCKOUT DETAILS:

When utility line(s) pass through the abutment backwall/stem, utility blockout details shall be shown on the abutment detail sheets of the plan assembly.

For utility line(s) passing through the abutment backwall/stem, a metal pipe sleeve or sleeve ring shall be provided for each utility line passing through the abutment backwall/stem. Pipe sleeves or sleeve rings shall be of sufficient diameter to provide a minimum clearance of 1” for the utility or conduit.

The location to centerline of the blockout shall be shown in the abutment PLAN view as shown below.

- For bridges with 0° skew:

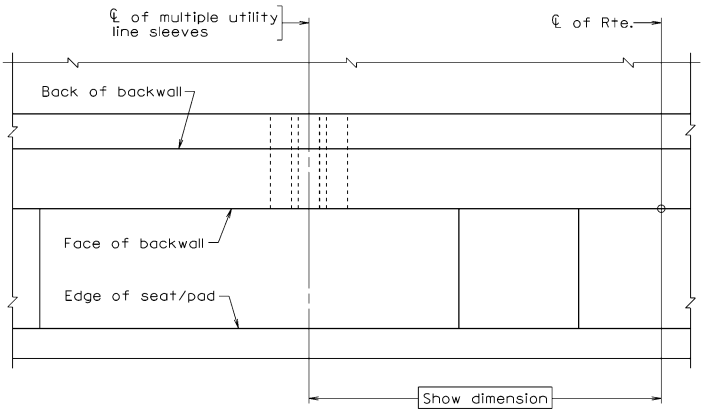

PARTIAL PLAN VIEW

- For bridges with skew:

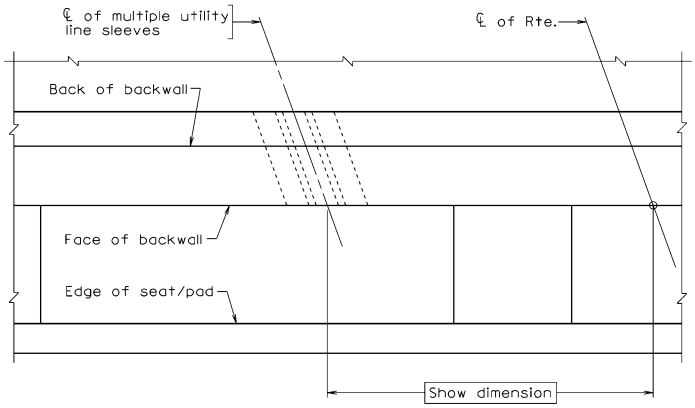

PARTIAL PLAN VIEW – W/ SKEW

The utility blockouts shall be reinforced with a minimum #6 bar at each face with the vertical location shown on the ELEVATION view as shown below.

- For single utility line:

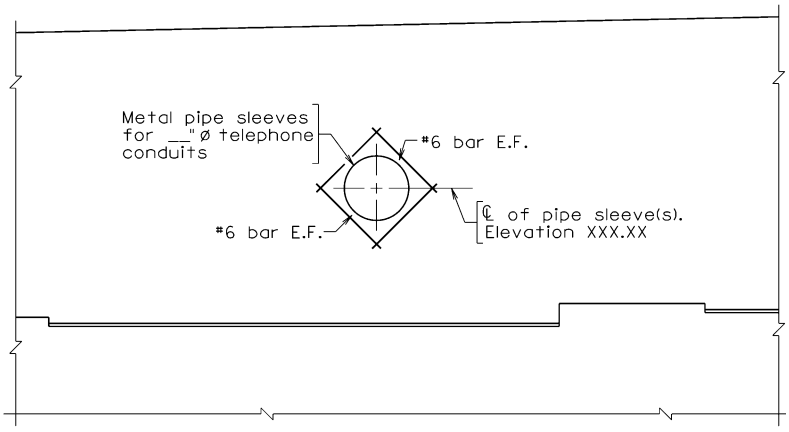

PARTIAL ELEVATION VIEW

- For multiple utility lines:

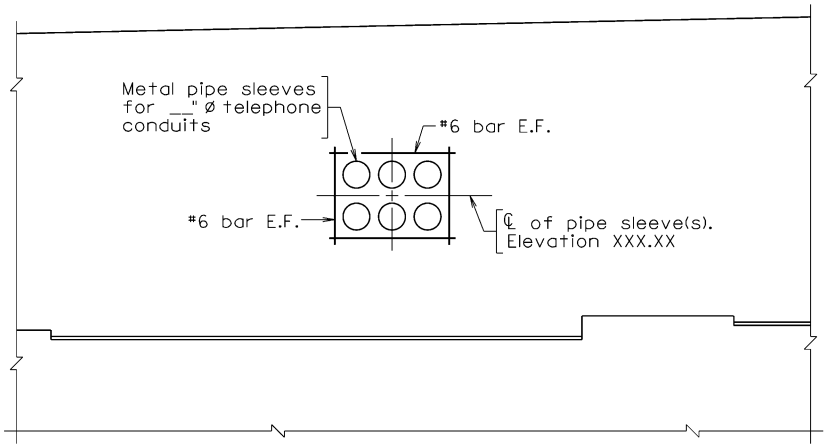

PARTIAL ELEVATION VIEW - MULTIPLE UTILITY LINES

END OF BEAM/GIRDER DETAILS - STEEL BEAMS/GIRDERS:

The details shown below and in File Nos. 17.03-22 thru -25 are for the designer's information only. See Introduction File No. 17.00-1.

For details not shown below, see File Nos. 17.05-1 thru -10 for full integral abutments, and File Nos. 17.07-1 thru -12 for semi-integral abutments.

- **For Full Integral Abutments – Skew = 0°:**

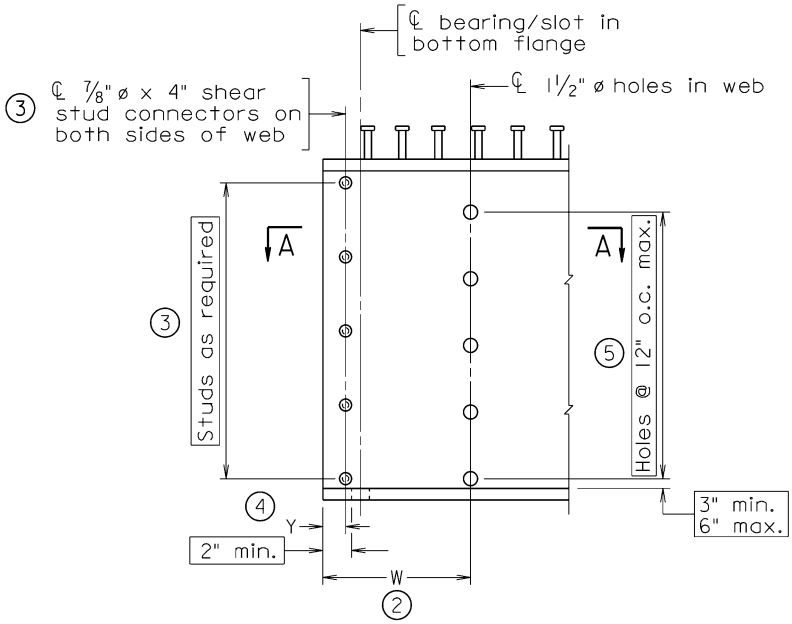

TYPICAL END OF BEAM/GIRDER DETAIL

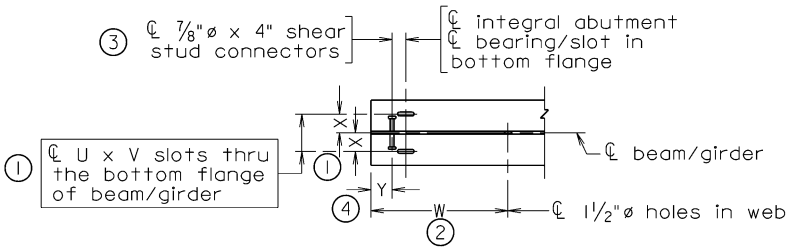

SECTION A-A

Show dimensions U, V, W, X and Y on the beam/girder detail sheets.

For explanation of numbered circles, see File No. 17.03-25.

- **For Full Integral Abutments – Skew > 0°:**

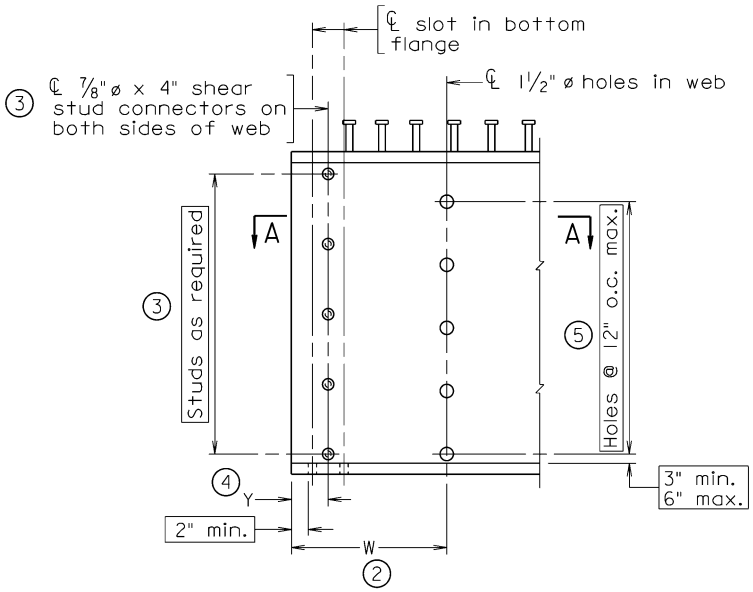

TYPICAL END OF BEAM/GIRDER DETAIL

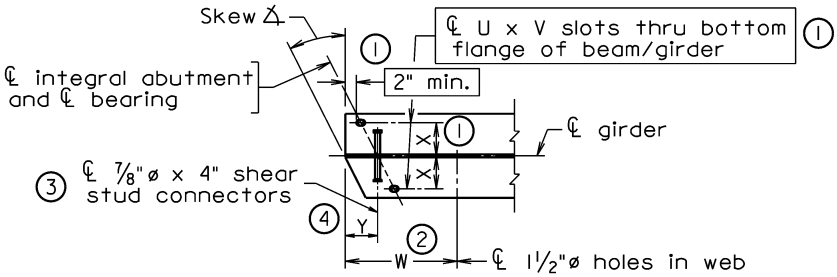

SECTION A-A

Show dimensions U, V, W, X and Y on the beam/girder detail sheets.

For explanation of numbered circles, see File No. 17.03-25.

- **For Semi-Integral Abutments – Skew = 0°:**

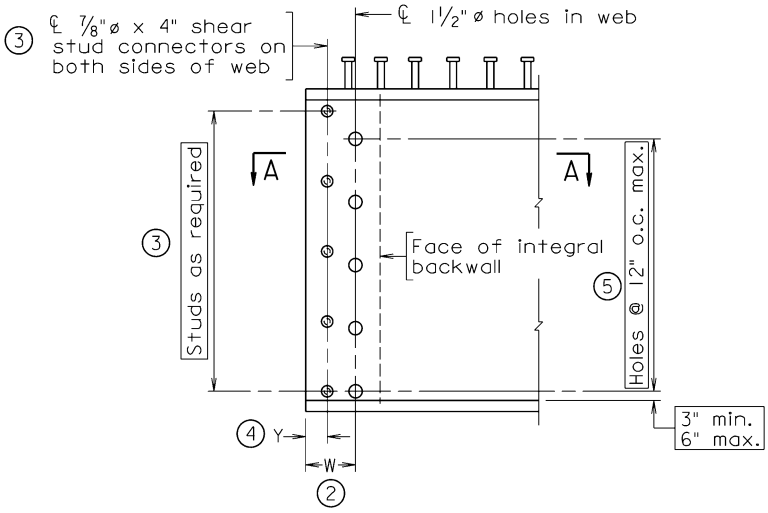

TYPICAL END OF BEAM/GIRDER DETAIL

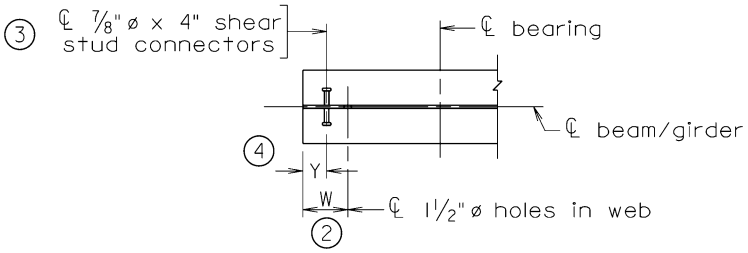

SECTION A-A

Show dimensions W and Y on the beam/girder detail sheets.

For explanation of numbered circles, see File No. 17.03-25.

- **For Semi-Integral Abutments – Skew > 0°:**

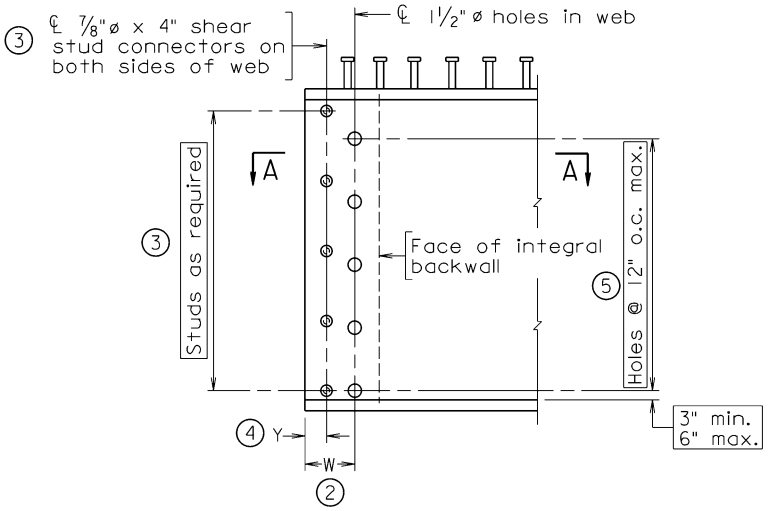

TYPICAL END OF BEAM/GIRDER DETAIL

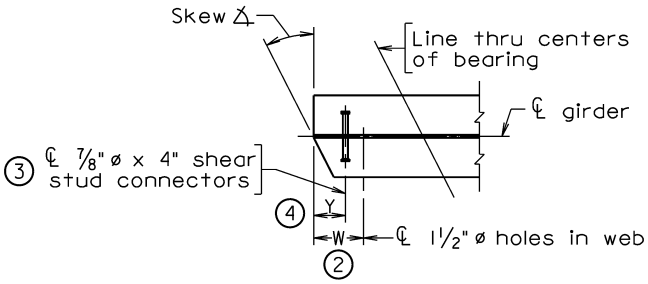

SECTION A-A

Show dimensions W and Y on the girder/beam detail sheets.

For explanation of numbered circles, see File No. 17.03-25.

Notes for End of Steel Beam/Girder Details:

The following notes apply to the details shown in File Nos. 17.03-21 thru -24.

1. The size of the slots in bottom flange and the distance from end of beam/girder shall be determined by the designer. The distance between the centerline of slots and the centerline of beam/girder shall also be determined by the designer and based on the minimum edge distances shown in the AASHTO LRFD specifications, Section 6.13.2.6.6.

2. The distance from the end of beam/girder to the centerline of the $1^1/_2$" ø holes shall be determined by the designer and based on the width of abutment used.

3. Stud shear connectors shall be used for anchorage of the beam/girder to the integral abutment and shall be located on each side of beam/girder. Neglect the reinforcing bars passing through the web. The first shear stud connector shall be located a minimum of 3" and a maximum of 6" from the flanges. The number and spacing of the stud shear connectors shall be determined by the designer. The designer shall assure there is adequate clearance provided between the shear stud connectors and the $1^1/_2$" ø holes for the AH series bars.

4. Stud shear connectors shall be located a minimum of $2^1/_2$" from the end of beam/girder.

5. A series of $1^1/_2$" ø holes shall be provided for the AH series bars to pass through. These holes shall be located a minimum of 3" and a maximum of 6" from the bottom flange and shall be spaced at 12" maximum. The top hole through the web shall be located at a sufficient distance from the top flange to fit within the stirrup bar enclosing the area.

6. Face of integral backwall is not to be shown in detail.

7. Provide flange clip detail (Section A-A) only where required.

END OF BEAM DETAILS – PRESTRESSED CONCRETE BEAMS:

For details not shown below, see File Nos. 17.05-1 thru -10 for full integral abutments, and File Nos. 17.07-1 thru -12 for semi-integral abutments.

The details shown below and in File Nos. 17.03-27 thru -29 are for the designer's information only. See Introduction File Nos. 17.00-1.

- **For Full/Semi-Integral Abutments:**

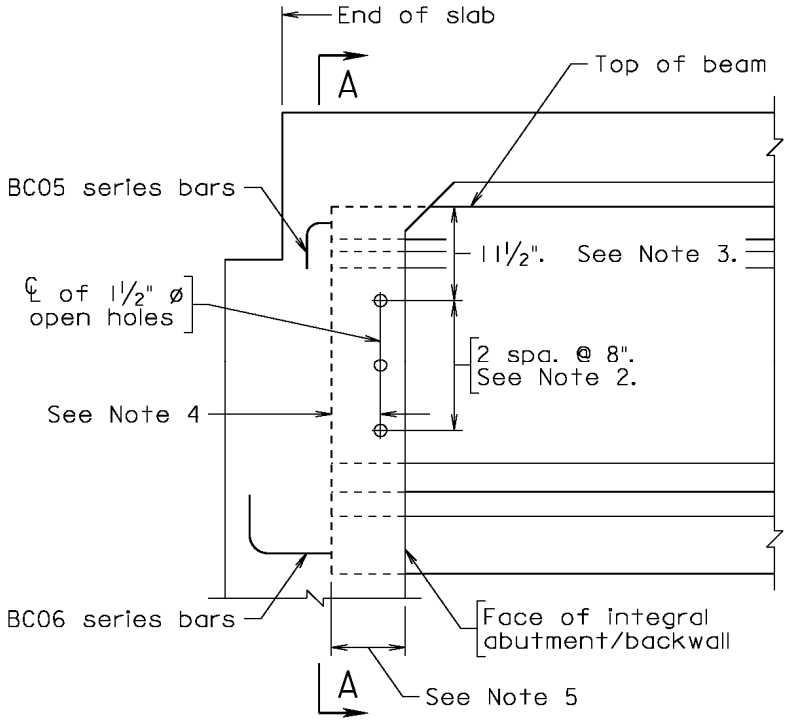

TYPICAL END OF BEAM DETAIL

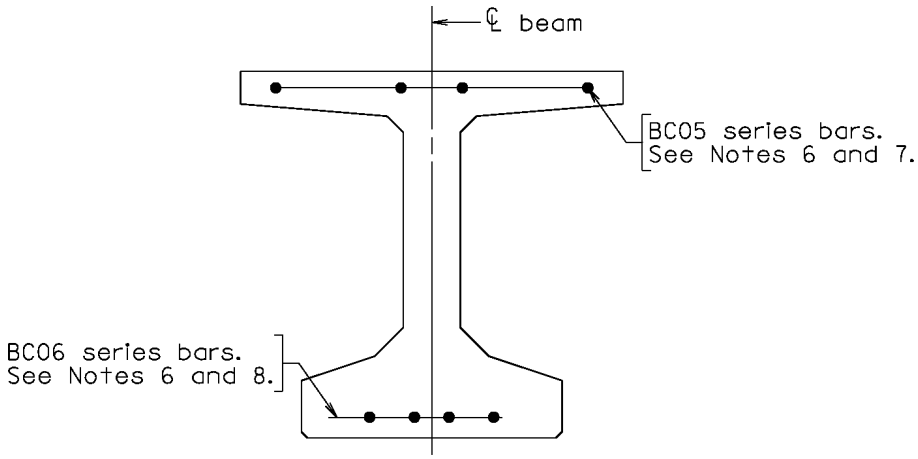

SECTION A-A

For Notes referenced to above, see File Nos. 17.03-28 and -29.

- **For Full Integral Abutments:**

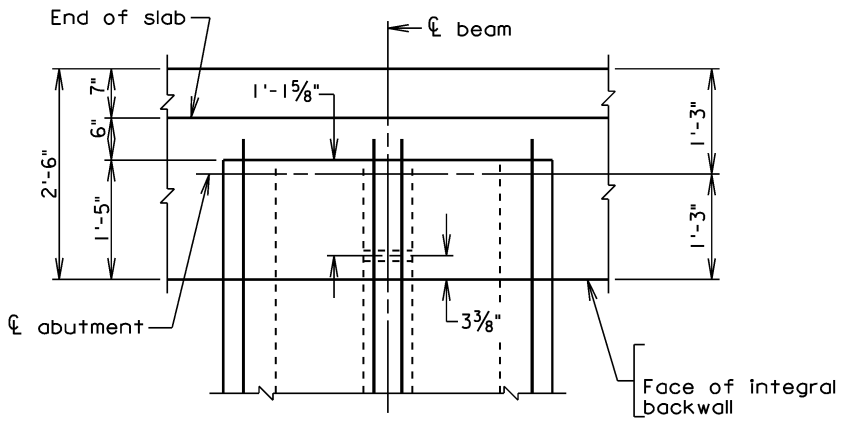

TYPICAL END OF BEAM PART PLAN - SKEW = 0°

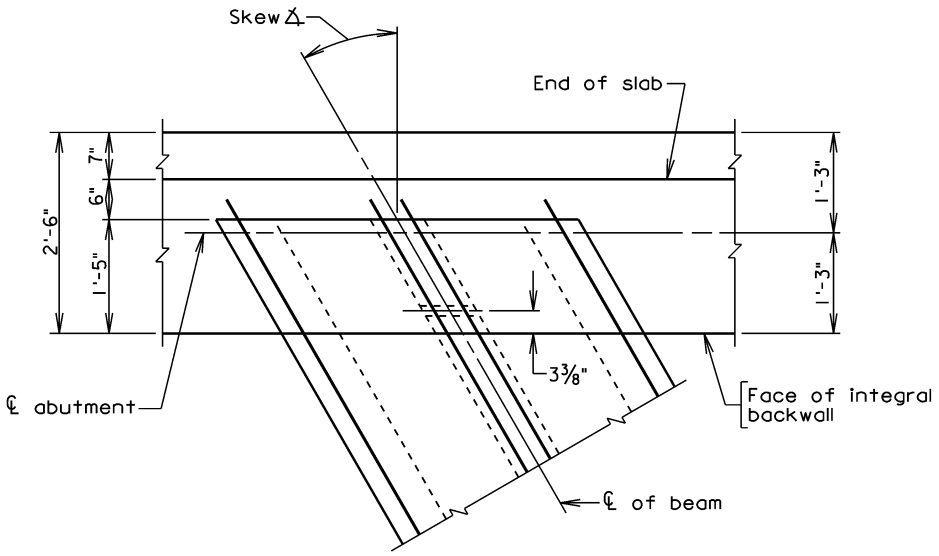

TYPICAL END OF BEAM PART PLAN - 0° < SKEW ≤ 30°

- **For Semi-Integral Abutments:**

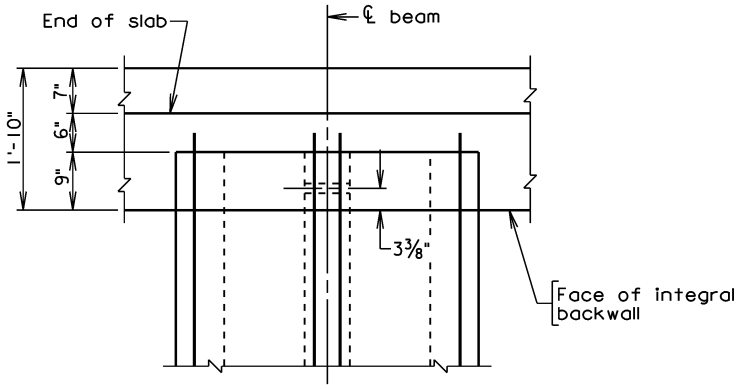

TYPICAL END OF BEAM PART PLAN - SKEW = 0°

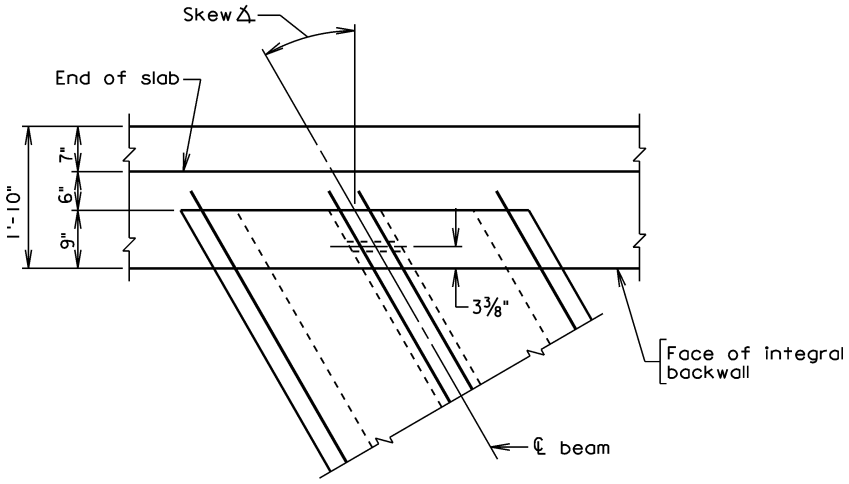

TYPICAL END OF BEAM PART PLAN - 0° < SKEW ≤ 30°

Notes for End of Prestressed Concrete Beam Details:

1. The detail shown above was developed for a prestressed concrete Bulb-T embedded in a semi-integral abutment backwall. Beam end detail for full-integral abutments is similar unless noted otherwise.

2. The three $1^1/_2$" diameter open holes shown above are for a PCBT-45 Bulb-T. For other beam depths, increase or decrease the number of holes by one hole for every increase or decrease in beam depth from the 45" beam depth shown above. For beam depths greater than 45", additional holes shall be spaced in 8" increments below the bottom hole shown above. The designer shall coordinate the locations of $1^1/_2$" diameter open holes with that of the prestressing strands to insure there are no conflicts with strands. In the event of conflicts between holes and strands, the designer may either change hole spacing or change the draped strand locations as specified in File No. 12.03-2.

3. The dimension shown may be adjusted when necessary to provide a minimum concrete cover of 3” for reinforcing steel located below the approach slab seat and/or to avoid conflicts with prestressing strands. All holes shall be located within the web of the beam.

4. The dimension shown may be adjusted as necessary to provide a minimum concrete cover of 3” for SH06 series longitudinal bars to the face of integral abutment/backwall.

5. For semi-integral abutment backwalls, the distance from end of beam to face of integral backwall shall normally be 9”. For full-integral abutments, the distance from end of beam to face of integral abutment shall normally be 1’-5”.

6. Modify the end of the beam shown in the Part Plan and Part Elevation shown on the prestressed concrete beam standard sheet to show the location of the $1^1/_2$” diameter open holes in the beam web and to reflect the BC05 and BC06 series bars shown. For semi-integral abutments for bridges on skews, modify the Part Plan to show the top flange clip or beam end bevel.

7. BC05 series bars shall be lapped with the BL05 series bars.

8. A minimum of 4 – BS06 series bars required. Provide distance from bottom of beam to centerline of bars and horizontal bar spacing on plans. Spacing bars in similar locations to those typically shown for the bottom position of BC0602 continuity bars is recommended.

EXPANDED POLYSTYRENE (EPS) DETAILS:

All integral abutments shall be provided with a layer of expanded polystyrene as shown below.

The thickness of the Expanded Polystyrene (EPS) layer at the bottom of the integral backwall/abutment shall be determined using the following formula:

h height of integral backwall/abutment in inches

ΔL total thermal movement for entire temperature range in inches (total of expansion and contraction)

EPS_t EPS thickness in inches (shall not be < 10")

$$EPS_t = 10\,[\,0.01h + 0.67(\Delta L)\,]$$

The designer shall ensure that the latest version of the "Special Provision for Elastic Inclusion" is placed in the contract. Elastic Inclusion is the combination of the elasticized EPS material and the geotextile separation membrane fabric.

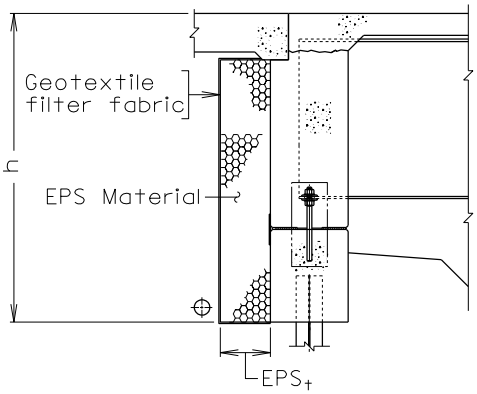

SECTION
Showing full integral with approach slab

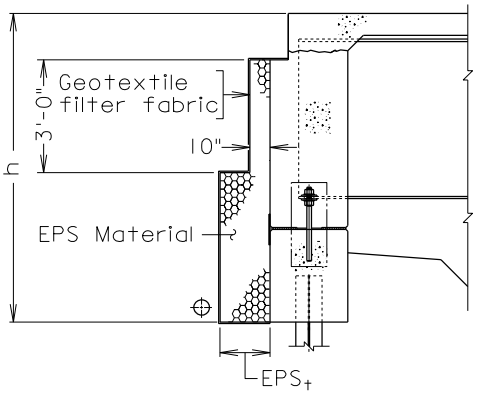

SECTION
Showing full integral without approach slab

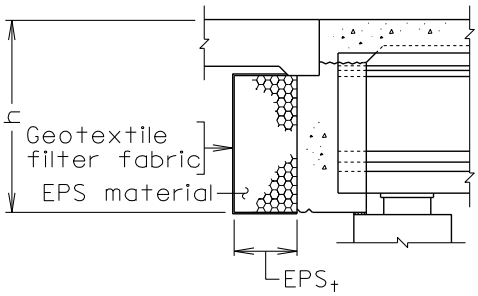

SECTION
Showing semi-integral with approach slab

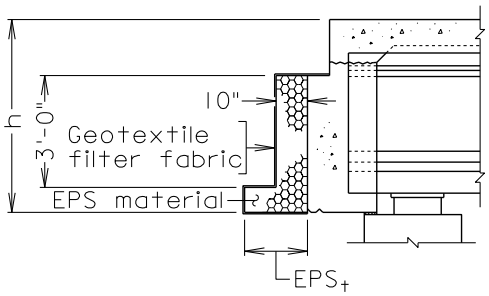

SECTION
Showing semi-integral without approach slab

ABUTMENTS **GENERAL ABUTMENT DETAILS** **EXPANDED POLYSTYRENE (EPS) DETAILS**	VOL. V - PART 2 DATE: 12Sep2014 SHEET 30 of 34 FILE NO. 17.03-30

STEEL MEMBER VENT HOLE DETAIL – INTEGRAL ABUTMENTS:

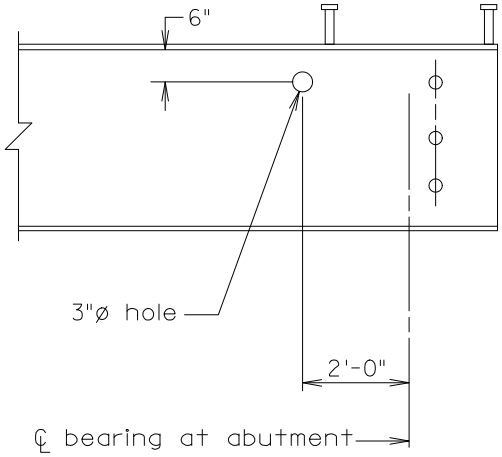

BEAM/GIRDER END VENT HOLE DETAIL

Steel beams/girders when used on integral abutment bridges shall have a 3" diameter hole located as shown in the above detail.

The location of the vent hole shall be on the high end of the bridge. If the bridge is level, then place hole on both ends.

The hole is to allow water to vent trapped air under the bridge during high water.

CONSTRUCTION JOINTS:

General Information:

Horizontal and vertical construction joints may be utilized for abutments to facilitate placement of concrete and/or to accommodate for phased construction.

Provisions shall be made in the design and detailing of abutments to allow the use of construction joints to facilitate the placement of concrete or phased construction. The locations shall be shown on the PLAN and ELEVATION views on the abutment detail sheets.

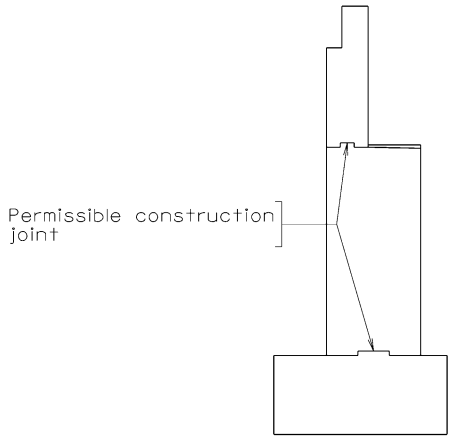

LOCATION OF PERMISSIBLE HORIZONTAL CONSTRUCTION JOINTS

All construction joints shall conform to the requirements set forth in Sections 404.03(g) and (h) of the current VDOT *Road and Bridge Specifications* and as specified herein.

Contact surfaces of the previously poured concrete shall be roughened thoroughly and cleaned of all dirt, laitance, loose aggregate and other foreign material by means of sandblasting. The set concrete surface shall be thoroughly wetted prior to the next pour of fresh concrete.

Continuous vertical and horizontal reinforcement shall extend through construction joints for a minimum distance of a lap length in order to provide a lap splice with the next length of bar. Vertical bars required in the section above the construction joint shall be embedded below the joint a minimum of a development length.

Concrete shall be placed in one continuous operation between construction joints.

Shear keys shall be provided in construction joints where required to meet the requirements of the AASHTO LRFD specifications for interface shear (shear friction) across the plane of the construction joint.

Shear Keys:

When shear keys are required by design, minimum width of key shall be one-third the width of construction joint with a minimum depth of $1^1/_2$".

For skewed abutments, shear key construction joints shall be perpendicular to the abutment.

Shear keys for the construction joints shall be poured continuous with and at the same time as the section below the joint.

When construction joints require a shear key, a TYPICAL SHEAR KEY DETAIL shall be shown on the abutment detail sheets of the plan assembly.

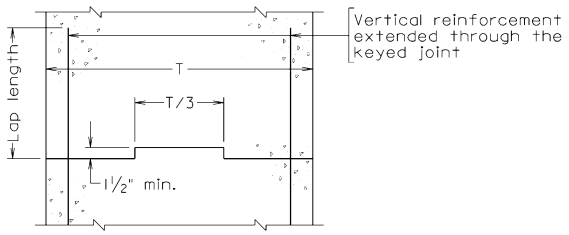

TYPICAL SHEAR KEY DETAIL

Vertical Construction Joints:

When vertical construction joints are required for phase construction, the joints shall be located between beam/girder seats/pads as shown in the partial plan below.

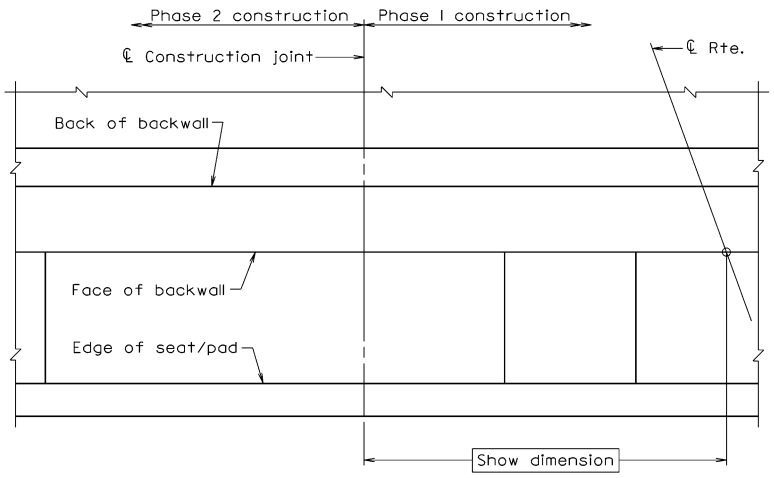

PARTIAL PLAN - VERTICAL CONSTRUCTION JOINT LOCATION

All vertical construction joints shall be provided with a waterstop and shear key that extend from the top of abutment wall to top of footing.

Waterstops shall conform to the requirements of Section 213 of the VDOT *Road and Bridge Specifications*.

When abutments require a vertical construction joint, a TYPICAL VERTICAL CONSTRUCTION JOINT DETAIL shall be shown on the abutment detail sheets of the plan assembly.

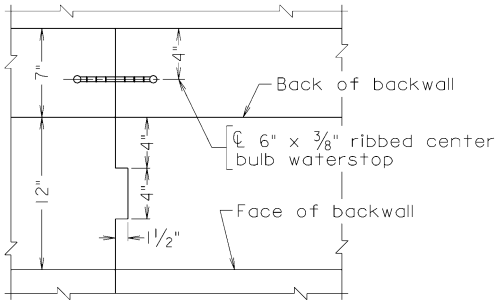

TYPICAL VERTICAL CONSTRUCTION JOINT DETAIL

When a vertical construction joint in the footing is required, the construction joint shall be offset a minimum of 6” from the neatwork construction joint to provide an area on which to set formwork.

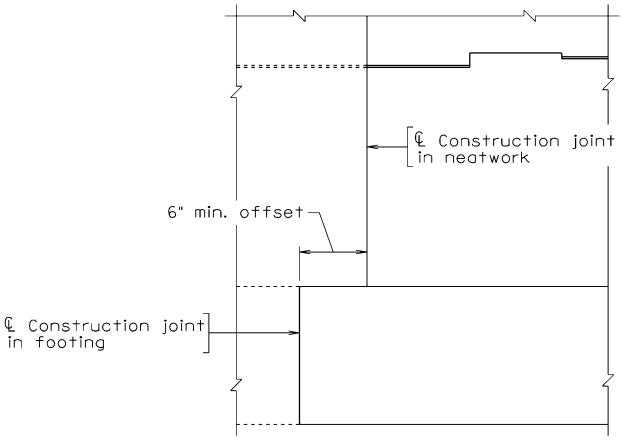

CONSTRUCTION JOINT OFFSET

GENERAL INFORMATION:

This section of the chapter establishes the practices and requirements necessary for the design and detailing of integral abutments. For general guidelines and requirements on the use of integral abutments, see File Nos. 17.01-1 and -7 thru -16.

Sample design calculations are provided based on the AASHTO LRFD specifications to assist the designer in the design of full integral abutments.

The sample design calculations contained herein are based on the 4th Edition of the *AASHTO LRFD Bridge Design Specifications* including Interims and VDOT Modifications (IIM-S&B-80.2). The designer is responsible for ensuring his design is accordance with the current edition of the *AASHTO LRFD Bridge Design Specifications* including Interims and VDOT Modifications (current IIM-S&B-80).

Sample plan sheets for full integral abutments including check lists are provided to show the necessary details required for a complete bridge plan assembly. See File Nos. 17.05-1 thru -10.

Use a single row of vertical steel H-piles (Preferably HP10x42) and orient piles for weak axis bending whenever possible.

The web of the H-pile shall be perpendicular to the centerline of the beams/girders regardless of the skew. This will facilitate the bending about the weak axis of the pile.

Maximum pile spacing shall not exceed beam/girder spacing.

Avoid high abutment walls except for short spans where anticipated movements are small and can be easily tolerated. Limit the total abutment height to a maximum of 17 feet from finished grade to bottom of footing.

Wingwalls supported by the abutment shall be limited to 6 feet for straight wings (elephant ear length beyond the 6 feet extension of footing to support wingwall shall be considered). Length of U-back wings shall be limited to 8 feet. The portion of the wall beyond shall be designed as a free-standing retaining wall. If not, an independent retaining wall system, which does not move, shall be considered.

SAMPLE DESIGN CALCULATIONS

The calculations provided do not correspond to the sample plans shown in File Nos. 17.05-3 thru -8.

TYPICAL TRANSVERSE SECTION AND SECTION THROUGH INTEGRAL ABUTMENT:

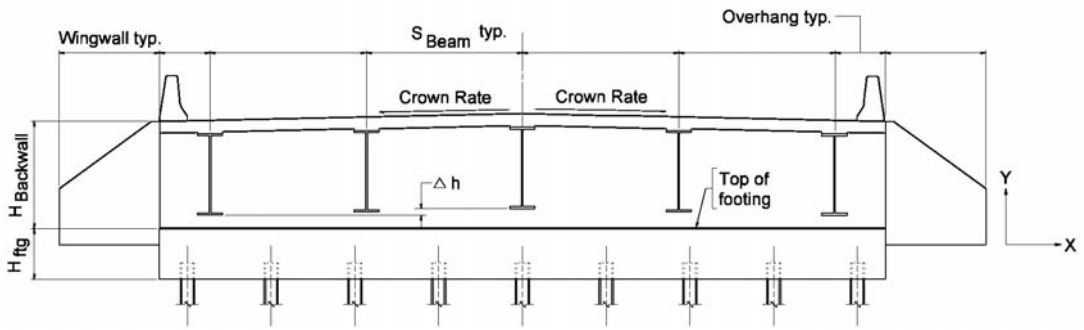

TRANSVERSE SECTION

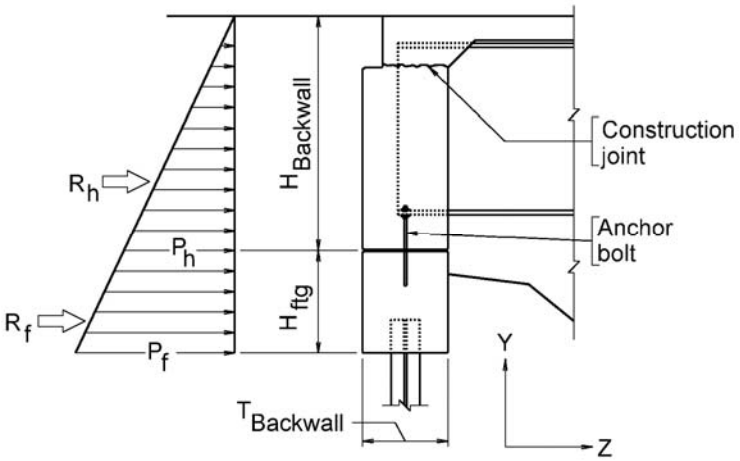

SECTION THROUGH INTEGRAL ABUTMENT

GIVEN AND ASSUMPTIONS:

γ_{soil} = 145 pcf	Unit weight of soil (select backfill material)
K_p = 4	Assumes the use of EPS material behind backwall
W_{Bridge} = 43.33 ft	Bridge width
W_{clear} = 40 ft	Clear bridge width

L_{Bridge} = 150.0 ft	Bridge length
$L_{Thermal}$ = 75.0 ft	Length of thermal expansion
S_{Beam} = 9.33 ft	Beam/girder spacing
Overhang = 3.0 ft	Slab (and integral backwall) overhang
$H_{Backwall}$ = 6.33 ft	Backwall height
H_{ftg} = 3.0 ft	Height of footing
D_{AS} = 1.5 ft	Depth of approach slab at backwall
CS = 0.02	Crown rate (cross slope) of bridge deck
$T_{Backwall}$ = 2.5 ft	Width of footing and backwall
T_{wing} = 1.5 ft	Thickness of wingwall
L_{wing} = 6 ft	Length of wingwall
T_{deck} = 8.5 in	Thickness of concrete deck
$T_{bottomflange}$ = 1 in	Thickness of bottom flange of beam/girder
$B_{bottomflange}$ = 12 in	Width of bottom flange of beam/girder
d_c = 3.5 in	Distance from the surface of concrete to center of reinforcing steel
f'_c = 4 ksi	Compressive strength of backwall concrete
f'_{cf} = 3 ksi	Compressive strength of footing concrete
f_y = 60 ksi	Yield strength of reinforcing steel
E_s = 29,000 ksi	Modulus of elasticity of steel girder
$E_c = 1820\sqrt{f'_c}$	Modulus of elasticity of concrete (Backwall)
$E_{cf} = 1820\sqrt{f'_{cf}}$	Modulus of elasticity of concrete (Footing)
γ_{RC} = 150 pcf	Unit weight of reinforced concrete
θ = 30 deg	Bridge skew angle
δ = 20 deg	Angle of wall friction
t_{min} = 0 deg	Minimum bridge exposure temperature for steel superstructure
t_{max} = 120 deg	Maximum bridge exposure temperature for steel superstructure

$\alpha = 6.5 \times 10^{-6} \left(\frac{1}{\deg}\right)$ Coefficient of thermal expansion for steel

$n_b = \frac{E_s}{E_c}$ Modular ratio of steel to concrete for the backwall and wingwall

$n_f = \frac{E_s}{E_{cf}}$ Modular ratio of steel to concrete for the footing

LRFD LOAD FACTORS: AASHTO LRFD Table 3.4.1-1 and 2

$\gamma_{TU} = 1.2$ Load factor for temperature induced deformations

$\gamma_{EH} = 1.35$ Load factor for passive earth pressure for strength

$\gamma_{EHs} = 1.0$ Load factor for passive earth pressure for service

$\gamma_I =$

DL	LL	TU	EH	
1.25	1.75	γ_{TU}	γ_{EH}	Strength I
1.25	1.35	γ_{TU}	γ_{EH}	Strength II
1.0	1.0	γ_{TU}	γ_{Ehs}	Service I
1.0	1.3	γ_{TU}	γ_{Ehs}	Service II

Note: If the bridge under consideration does not have an approach slab, load case "LS" should be included in the analysis.

$\eta_D = 1.0$ Load modifier (ductility) AASHTO LRFD 1.3.3

$\eta_R = 1.0$ Load modifier (redundancy) AASHTO LRFD 1.3.4

$\eta_I = 1.0$ Load modifier (importance) AASHTO LRFD 1.3.5

$\eta = \eta_D \times \eta_R \times \eta_I$ Overall load modifier AASHTO LRFD 1.3.2.1-1

$\eta = 1.0$ Per current VDOT IIM-S&B-80, all load modifiers shall be = 1.0 for all Limit States.

LRFD REDUCTION FACTORS:

AASHTO LRFD 5.5.4.2.1

$\Phi_b = 0.90$ For bending in reinforced concrete

$\Phi_v = 0.90$ For shear in reinforced concrete

AASHTO LRFD 6.5.4.2:

$\Phi_r = 1.00$	For structural steel in flexure
$\Phi_{vs} = 1.00$	For structural shear in steel
$\Phi_{vd} = 0.75$	For shear in dowels
$\Phi_{ss} = 0.85$	For shear studs
$\Phi_{bp} = 1.00$	For undamaged piles in bending
$\Phi_{cp} = 0.70$	For undamaged piles in axial loading
$\Phi_{cpd} = 0.50$	For damaged piles in pure axial loading
$\Phi_{bab} = 1.00$	For bending in anchor bolts
$\Phi_{cab} = 0.70$	For compression in anchor bolts (combined axial and bending)
$\Phi_{vab} = 0.75$	For shear in anchor bolts

LOAD DEFINITIONS:

P_h	Passive earth pressure at base of backwall (hinge location)
R_h	Resultant passive earth pressure acting along the backwall
P_f	Passive earth pressure at base of footing
R_f	Resultant passive earth pressure acting along the footing

The backwall, overhang, and wingwalls are designed for bending about the y-axis with the following assumptions:

- backwall acts as a continuous beam supported by the beams/girders
- wingwall act as a single cantilevered beam supported by the wing haunch

BACKWALL DESIGN:

Earth pressure

$\Delta h = 2 \times CS\ (S_{Beam}) = 2 \times 0.02\ (9.33) = 0.4$ ft — Change in height of backwall

$P_f = \gamma_{soil} \times K_p\ (H_{Backwall} + \Delta h + H_{ftg})$ — Passive earth pressure at bottom of footing
$= 0.145 \times 4\ (6.33 + 0.4 + 3) = 5.6$ ksf

$P_h = \gamma_{soil} \times K_p\ (H_{Backwall} + \Delta h)$ — Passive earth pressure at hinge level
$= 0.145 \times 4\ (6.33 + 0.4) = 3.9$ ksf

Determine backwall moments and shears:

$R_h = \left(\frac{1}{2}\right) P_n \, (H_{backwall} + \Delta h)$ — Resultant passive earth pressure per foot on backwall

$= \left(\frac{1}{2}\right) 3.9 \, (6.33 + 0.4)$

$R_h = 13.1 \ \frac{k}{ft}$

For simplicity, use the following equations to determine moments, shear, and reaction.

$L_{GS} = \frac{S_{Beam}}{\cos(\theta_A)} = \frac{9.33}{\cos(30)} = 10.8 \text{ ft}$ — Beam/girder spacing along skew

AISC Table 3-23.42 (assuming 4 equal spans)

$M_{pos} = 0.0772 \times R_h \, (L_{GS})^2$ — Maximum positive moment

$= 0.0772 \times 13.1 \, (10.8)^2 = 117.3 \text{ ft-k}$

$M_{neg} = 0.107 \times R_h \, (L_{GS})^2$ — Maximum negative moment

$= 0.107 \times 13.1 \, (10.8)^2 = 162.5 \text{ ft-k}$

$V_{max} = 0.607 \times R_h \, (L_{GS})$ — Maximum shear

$= 0.607 \times 13.1 \, (10.8) = 85.6 \text{ k}$

$R_{max} = 1.14 \times R_h \, (L_{GS})$ — Maximum reaction at beam/girder

$= 1.14 \times 13.1 \, (10.8) = 160.7 \text{ k}$

Determine overhang moments and shears:

$M_{OH} = 0.5 \times R_h \left(\frac{\text{Overhang}}{\cos(\theta_A)}\right)^2$ — Moment due to overhang

$= 0.5 \times 13.1 \left(\frac{3.0}{\cos(30)}\right)^2 = 78.5 \text{ ft-k}$

$V_{OH} = R_h \left(\frac{\text{Overhang}}{\cos(\theta_A)}\right)$ — Shear due to overhang

$= 13.1 \left(\frac{3.0}{\cos(30)}\right) = 45.3 \text{ k}$

$M_{max} = \max(M_{neg}, M_{OH}, M_{pos})$ $\qquad M_{max} = 162.5 \text{ ft-k}$

$V_{max} = \max(V_{max}, V_{OH})$ $\qquad V_{max} = 85.6 \text{ k}$

Design for flexure:

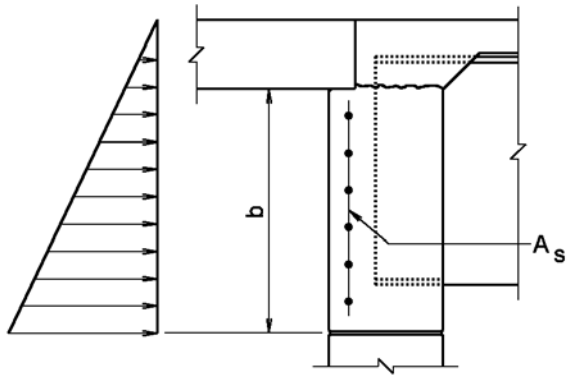

$M_u = \gamma_{EH} \times \eta \times M_{max}$ — Factored strength moment for integral backwall

$= 1.35 \times 1 \times 162.5 = 219.4$ ft-k

Analyze VDOT Standard of 6 - #6 bars at 12" for adequacy

$A_s = 2.64$ in^2 — Amount of reinforcement in outermost layer of reinforcing steel

$b = H_{Backwall} - D_{AS} = (6.33 \times 12) - (1.5 \times 12) = 58.0$ in

$d = T_{Backwall} - d_c = (2.5 \times 12) - 3.5 = 26.5$ in — Depth to centroid of outermost layer of reinforcing steel

$T = Fy \times As = 60 \times 2.64 = 158.4$ k — Total tension force in reinforcing steel

$$a = \frac{T}{(0.85 \times f'_c \times b)} = \frac{158.4}{(0.85 \times 4 \times 58)} = 0.8 \text{ in}$$ — Depth of compression block

$$M_n = T\left(d - \frac{a}{2}\right) = 158.4\left(26.5 - \frac{0.8}{2}\right) = 344.5 \text{ k-ft}$$

$\Phi_b M_n = 0.9 \times 344.5 = 310.0$ k-ft

$\Phi_b M_n > M_u$ Therefore, strength adequate

Check minimum reinforcement requirement:

$f_r = 0.37\sqrt{f'c} = 0.37\sqrt{4} = 0.7$ ksi — Modulus of rupture — AASHTO LRFD 5.7.3.3.2

$I_g = \left(\frac{1}{12}\right)(H_{Backwall})(T_{Backwall})^3$ Gross moment of inertia AASHTO LRFD 5.4.2.6

$= \left(\frac{1}{12}\right)(6.33 \times 12)(2.5 \times 12)^3 = 170910 \text{ in}^4$

$y_{Bw} = \frac{T_{Backwall}}{2} = \frac{2.5 \times 12}{2} = 15.0 \text{ in}$

$M_{crBW} = \frac{f_r\, Ig}{y_{BW}} = \frac{0.7 \times \frac{170{,}910}{12}}{15} = 702.6 \text{ k-ft}$

Minimum reinforcement is based on the requirement that $\Phi_b \times M_n$ is greater than the lesser of $1.2 \times M_{crBW}$ and $1.33 \times M_u$

$\Phi_b M_n = 0.9 \times 344.5 = 310.0$ k-ft Factored resistance

$1.33 \times M_u = 1.33 \times 219.4 = 291.9$ k-ft Factored design load

$1.2 \times M_{crBW} = 1.2 \times 702.6 = 843.2$ k-ft Cracking moment

$\Phi_b \times M_n > \min(1.33 \times M_u, 1.2 \times M_{crBW})$ Therefore, requirement met

Note: The designer should also check AASHTO LRFD 5.7.3.4 – Crack Control, AASHTO 5.10.3 – Spacing of Reinforcement and AASHTO 5.10.8 – Shrinkage and Temperature Reinforcement.

Design for shear:

$V_u = \gamma_{EH} \times \eta \times V_{max} = 1.35 \times 1.0 \times 85.6 = 115.5$ k Factored shear from passive earth pressure

Use General Procedure for determination of shear resistance. This example conservatively assumes that the minimum amount of shear reinforcement is not provided, AASHTO LRFD 5.8.2.5. If minimum amount shear reinforcement is provided, check AASHTO LRFD 5.8.3.4.2 for modifications to the following procedure.

$s_x = d = 26.5$ in AASHTO LRFD 5.8.3.4.2

$a_g = 1.5$ in Maximum aggregate size

$s_{xe} = s_x \frac{1.38}{a_g\left(\frac{1}{in}\right) + 0.63}$ Crack spacing parameter

$= 26.5 \frac{1.38}{1.5\left(\frac{1}{in}\right) + 0.63} = 17.2 \text{ in}$ AASHTO LRFD 5.8.3.4.2-5

$$\varepsilon_x = \frac{\left(\frac{M_u}{d} + V_u\right)}{Es\ As}$$ Longitudinal strain AASHTO LRFD 5.8.3.4.2-4

$$= \frac{\left(\frac{219.4}{26.5/12} + 115.5\right)}{60 \times 2.64} = 2.81E\text{-}003$$

$$\beta = \frac{4.8}{(1750\ \varepsilon_x)} \times \frac{51}{\left[s_{xe}\left(\frac{1}{in}\right) + 39\right]}$$ AASHTO LRFD 5.8.3.4.2-2

$$= \frac{4.8}{(1750 \times 2.81E-003)} \times \frac{51}{[17.2 + 39]} = 1.4$$

$\theta_v = (29 + 3500 \times \varepsilon_x)$ deg AASHTO LRFD 5.8.3.4.2-3

$= (29 + 3500 \times 2.81E\text{-}003)$ deg = 38.8 deg

$V_c = 0.0316 \times \beta\sqrt{(f'_c)}\ d \times H_{Backwall}$ AASHTO LRFD 5.8.3.3-3

$= 0.0316 \times 1.4\sqrt{(4)}\ 26.5 \times 6.33 \times 12 = 178.5$ k

$V_u > 0.5 \times \Phi_v \times (V_c + V_p) = 0.5 \times 0.9 \times (178.5 + 0) = 80.3$ k AASHTO LRFD 5.8.2.4-1

$0.5 \times \Phi_v \times (V_c + V_p) < V_u$, Therefore, shear reinforcement required.

Check capacity with standard shear reinforcement (#4 stirrups spaced at 12")

$A_v = 0.4$ in^2 (2 legs) Shear reinforcement

$s_v = 12$ in Reinforcement spacing

$$V_s = \frac{A_v \times F_y \times d \times \cot(\theta_v)}{s_v}$$ AASHTO LRFD 5.8.3.3-4

$$= \frac{0.4 \times 60 \times 26.5 \times \cot(38.8)}{12} = 65.9 \text{ k}$$

$V_c + V_s + V_p = 178.5 + 65.9 + 0 = 244.4$ kips AASHTO LRFD 5.8.3.3-1

$b_v = T_{Backwall} = 1.58$ ft

$$d_v = \frac{M_n}{A_s f_y} = \frac{344.5 \times 12}{2.64 \times 60} = 26.10 \text{ in.}$$

$0.25 f'_c b_v d_v + V_p = 0.25 \times 4 \times (1.58 \times 12) \times 26.10 + 0 = 494.9$ kips AASHTO LRFD 5.8.3.3-2

V_n = min. of AASHTO LRFD 5.8.3.3-1 and 5.8.3.3-2 = 244.4 kips

$V_r = \Phi_v \times V_n = 0.9 \times 244.4 = 220.0$ kips Factored nominal resistance

$V_u = 85.6$ k — Factored design load

$V_r > V_u$ Therefore, design adequate

Therefore, use shear reinforcement: #4 stirrup spaced at 12”

Design shear studs at end of girders:

d = 0.875 in — Diameter of shear stud

$A_{sc} = \frac{\pi}{4} \times d^2 = \frac{\pi}{4} \times 0.875^2 = 0.6 \text{ in}^2$ — Cross-sectional area of a single stud

$F_u = 60$ ksi — Specified minimum tensile strength

$Q_n = \min(0.5 \times A_{sc}\sqrt{f'_c E_c}, A_{sc} \times F_u)$ — Nominal shear resistance of a single stud

$= \min(0.5 \times 0.6\sqrt{4 \times 3{,}640}, 0.6 \times 60)$ — AASHTO LRFD 6.10.10.4.3-1

$= 36.1$ k

$R_u = \gamma_{EH} \times \eta \times R_{max} = 1.35 \times 1.0 \times 160.7 = 217.0$ k — Factored reaction due to the passive earth pressure acting on the backwall

$n_{studs} = \frac{R_u}{(\phi_{ss} Q_n)} = \frac{217.0}{(0.85 \times 36.1)} = 7.1$ — Total number of shear studs required

$n_{studs} = \text{Round}(n_{studs}) = 8$ — Round total number of shear studs required (2 minimum)

$n_{perside} = \frac{n_{studs}}{2} = \frac{8}{2} = 4.0$ — Number of shear studs per side of web

OVERHANG DESIGN:

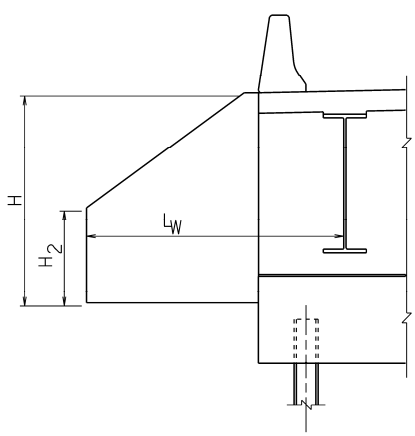

SECTION AT WINGWALL

Earth pressure:

$L_w = L_{wing} + \text{Overhang} = 6 + 3 = 9.0$ ft — True length of wingwall with overhang

$S_{slopeww} = \frac{1}{1.5}$ Slope of wingwall

H_{bf} = 12 in Wingwall depth below top of footing

$H = H_{Backwall} + H_{bf} = 6.33 + 1 = 7.3$ ft Upper height of wingwall

$H_2 = H - S_{slopeww} \times L_{wing} = 7.3 - \frac{1}{1.5} \times 6 = 3.3$ ft Lower height of wingwall

$w_w = \left(\frac{1}{2}\right) \gamma_{soil} \times K_p \left[H_2 + \frac{3}{4}(H - H_2)\right]^2$ Passive earth pressure acting on overhang and wingwall

$= \left(\frac{1}{2}\right) 0.145 \times 4 \left[3.3 + \frac{3}{4}(7.3 - 3.3)\right]^2 = 11.6\ ^k/_{ft}$

$M_{OH} = 0.5 \times w_w (L_w)^2 = 0.5 \times 11.6\ (9)^2 = 470.6$ k-ft

$V_{OH} = w_w \times L_w = 11.6 \times 9 = 104.6$ k

$M_u = \gamma_{EH} \times \eta \times M_{OH}$ Factored moment for overhang

$= 1.35 \times 1.0 \times 470.6 = 635.3$ k-ft

Design for flexure:

Analyze VDOT Standard of 7- #6 bars at 12" for adequacy

$A_s = 3.08\ in^2$ Amount of reinforcement in outermost layer of steel

$d = T_{Backwall} - d_c = (2.5 \times 12) - 3.5 = 26.5$ in Depth to centroid of outermost layer of steel

$T = F_y \times A_s = 60 \times 3.08 = 184.8$ k Total tension force in steel

$a = \frac{T}{(0.85 \times f'_c \times H_{backwall})}$ Depth of compression block

$= \frac{184.8}{(0.85 \times 4 \times 6.33 \times 12)} = 0.7$ in

$M_n = T\left(d - \frac{a}{2}\right) = 184.8\left(26.5 - \frac{0.7}{2}\right) = 402.6$ k-ft

$\Phi_b \times M_n = 0.9 \times 402.6 = 362.3$ k-ft Factored resistance

$M_u = 635.3$ k-ft Factored design load

$\Phi_b \times M_n < M_u$, Therefore re-design required.

By Trial and Error, try 10-#8 bars at 7" spacing:

$A_s = 7.9\ in^2$ Amount of reinforcement in outermost layer of steel

$d = T_{Backwall} - d_c = (2.5 \times 12) - 3.5 = 26.5$ in Depth to centroid of outermost layer of steel

$T = F_y \times A_s = 60 \times 7.9 = 474.0$ k Total tension force in steel

$$a = \frac{T}{(0.85 \times f'_c \times H_{backwall})}$$ Depth of compression block

$$= \frac{184.8}{(0.85 \times 4 \times 6.33 \times 12)} = 1.8 \text{ in}$$

$$M_n = T\left(d - \frac{a}{2}\right) = 474.0\left(26.5 - \frac{1.8}{2}\right) = 1010.5 \text{ k-ft}$$

$\Phi_b \times M_n = 0.9 \times 1010.5 = 909.5$ k-ft Factored resistance

$\Phi_b \times M_n > M_u$ Therefore design ok.

Check minimum reinforcement requirement:

$f_r = 0.37\sqrt{f'c} = 0.37\sqrt{4} = 0.7$ ksi Modulus of rupture AASHTO LRFD 5.7.3.3.2

$$I_g = \left(\frac{1}{12}\right)(H_{Backwall})(T_{Backwall})^3$$ Gross moment of inertia AASHTO LRFD 5.4.2.6

$$= \left(\frac{1}{12}\right)(6.33 \times 12)(2.5 \times 12)^3 = 170910 \text{ in}^4$$

$$y_{Bw} = \frac{T_{Backwall}}{2} = \frac{2.5 \times 12}{2} = 15.0 \text{ in}$$

$$M_{crBW} = \frac{f_r\, Ig}{y_{BW}} = \frac{0.7 \times \frac{170{,}910}{12}}{15} = 702.6 \text{ k-ft}$$

Minimum reinforcement is based on the requirement that $\Phi_b \times M_n$ is greater than the lesser of $1.2 \times M_{crBW}$ and $1.33 \times M_u$

$\Phi_b M_n = 0.9 \times 1{,}010.5 = 909.5$ k-ft Factored resistance

$1.33 \times M_u = 1.33 \times 635.3 = 845.0$ k-ft Factored design load

$1.2 \times M_{crBW} = 1.2 \times 702.6 = 843.2$ k-ft Cracking moment

$\Phi_b \times M_n > \min(1.33 \times M_u, 1.2 \times M_{crBW})$, Therefore, requirement met

Note: The designer should also check AASHTO LRFD 5.7.3.4 – Crack Control, AASHTO 5.10.3 – Spacing of Reinforcement and AASHTO 5.10.8 – Shrinkage and Temperature Reinforcement.

Design for shear:

$V_u = \gamma_{EH} \times \eta \times V_{OH} = 1.35 \times 1.0 \times 104.6 = 141.2$ k Factored shear from passive earth pressure

$s_x = d = 26.5$ in AASHTO LRFD 5.8.3.4.2

$a_g = 1.5$ in Maximum aggregate size

$s_{xe} = s_x \dfrac{1.38}{a_g\left(\dfrac{1}{in}\right)+0.63}$ Crack spacing parameter AASHTO LRFD 5.8.3.4.2-5

$= 26.5 \dfrac{1.38}{1.5\left(\dfrac{1}{in}\right)+0.63} = 17.2$ in

$\varepsilon_x = \dfrac{\left(\dfrac{M_u}{d}+V_u\right)}{E_s A_s}$ Longitudinal strain AASHTO LRF5.8.3.4.2-4

$= \dfrac{\left(\dfrac{635.3}{26.5/12}+141.1\right)}{29000\times 7.9} = 1.87E\text{-}003$

$\beta = \dfrac{4.8}{(1750\,\varepsilon_x)} \times \dfrac{51}{\left[s_{xe}\left(\dfrac{1}{in}\right)+39\right]}$ AASHTO LRFD 5.8.3.4.2-2

$= \dfrac{4.8}{(1750\times 1.87E-003)} \times \dfrac{51}{\left[17.2\left(\dfrac{1}{in}\right)+39\right]} = 1.8$

$\theta_v = (29 + 3500 \times \varepsilon_x)$ deg AASHTO LRFD 5.8.3.4.2-3

$= (29 + 3500 \times 1.87E\text{-}003)$ deg $= 35.6$ deg

$V_c = 0.0316 \times \beta\sqrt{(f'_c)}\ d \times H_{Backwall}$ AASHTO LRFD 5.8.3.3-3

$= 0.0316 \times 1.8\sqrt{(4)}\ 26.5 \times 6.33 \times 12 = 230.6$ k

$V_n = 0.5 \times V_c = 0.5 \times 230.6 = 115.3$ k AASHTO LRFD 5.8.2.4-1

$\Phi_v \times V_n = 0.9 \times 115.3 = 103.8$ k Shear resistance

$\Phi_v \times V_n < V_u$, Therefore, shear reinforcement required

Check capacity with standard shear reinforcement (#4 stirrups spaced at 12" oc)

$A_v = 0.4$ in^2 (2 legs) Shear reinforcement

$s_v = 12$ in Reinforcement Spacing

$V_s = \dfrac{A_v F_y\ d \cot(\theta_v)}{s_v}$ AASHTO LRFD 5.8.3.3-4

$= \dfrac{0.4\times 60\times 26.5\cot(35.6)}{12} = 74.2$ k

$V_c + V_s + V_p = 230.6 + 74.2 + 0 = 304.8$ kips AASHTO LRFD 5.8.3.3-1

$b_v = T_{Backwall} = 1.58$ ft

$$d_v = \frac{M_n}{A_s f_y} = \frac{1010.5x12}{7.9 \times 60} = 25.58 \text{ in}$$

$0.25f'_c b_v d_v + V_p = 0.25 \times 4 \times (1.58 \times 12) \times 25.58 + 0 = 485.0$ kips AASHTO LRFD 5.8.3.3-2

V_n = min. of AASHTO LRFD 5.8.3.3-1 and 5.8.3.3-2 = 304.8 kips

$V_r = \Phi_v \times V_n = 0.9 \times 304.8 = 274.3$ kips Factored nominal resistance

$V_r > V_u$, therefore design adequate

Therefore, use shear reinforcement: #4 stirrup spaced at 12"

WINGWALL DESIGN:

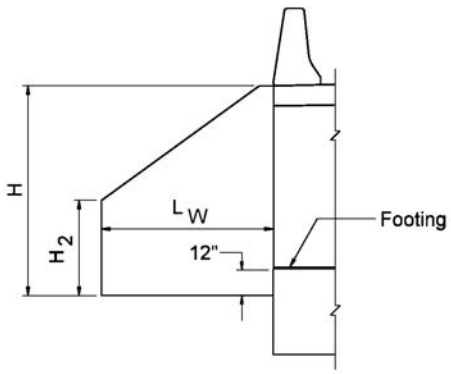

SECTION AT WINGWALL

Earth pressure:

$L_w = L_{wing} = 6.0$ ft True length of wing

$H_{bf} = 12$ in Wingwall depth below top of footing

$H = H_{backwall} + H_{bf} = 6.33 + 1 = 7.3$ ft Upper height of wingwall

$H_2 = 7.3 - \frac{1}{1.5} \times 6 = 3.3$ ft Lower height of wingwall

$$w_w = \left(\frac{1}{2}\right)\gamma_{soil} \times K_p\left[H_2 + \frac{3}{4}(H - H_2)\right]^2$$ Earth pressure acting on overhang and wingwall

$$= \left(\frac{1}{2}\right) \times 0.145 \times 4\left[3.3 + \frac{3}{4}(7.3 - 3.3)\right]^2 = 11.6 \ ^k/_{ft}$$

$M_{OH} = 0.5 \times w_w (L_w)^2 = 0.5 \times 11.6 (6)^2 = 209.2$ k-ft

$V_{OH} = w_w \times L_{wing} = 11.6 \times 6 = 69.7$ k

$M_u = \gamma_{EH} \times \eta \times M_{OH}$ Factored moment for wingwall

$= 1.35 \times 1.0 \times 209.2 = 282.4$ k-ft

$d = T_{wing} - d_c = (1.5 \times 12) - 3.5 = 14.5$ in — Depth to centroid of outermost layer of steel

$V_u = \gamma_{EH} \times \eta \times V_{OH}$ — Factored shear for wingwall

$= 1.35 \times 1.0 \times 69.7 = 94.1$ k

Design for flexure:

Continue reinforcement from overhang into wingwall, 10 - #8 bars at 7 in

$A_s = 7.9$ in^2 — Amount of reinforcement in outermost layer of steel

$T = F_y \times A_s = 60 \times 7.9 = 474.0$ k — Total tension force in steel

$a = \dfrac{T}{(0.85\, f_c' H_{Backwall})}$ — Depth of compression block

$= \dfrac{474}{(0.85 \times 4 \times 6.33 \times 12)} = 1.8$ in

$M_n = T\left(d - \dfrac{a}{2}\right) = 474\left(14.5 - \dfrac{1.8}{2}\right) = 537.2$ k-ft

$\Phi_b \times M_n = \Phi_b \times 537.2 = 483.5$ k-ft — Nominal resistance

$\Phi_b \times M_n > M_u$, Therefore, strength adequate.

Check minimum reinforcement requirement:

$f_r = 0.37\sqrt{f'c} = 0.37\sqrt{4} = 0.7$ ksi — Modulus of rupture AASHTO LRFD 5.7.3.3.2

$I_g = \left(\dfrac{1}{12}\right)(H_{Backwall})(T_{Backwall})^3$ — Gross moment of inertia AASHTO LRFD 5.4.2.6

$= \left(\dfrac{1}{12}\right)(6.33 \times 12)(2.5 \times 12)^3 = 170910.0$ in^4

$y_{Bw} = \dfrac{T_{Backwall}}{2} = \dfrac{2.5 \times 12}{2} = 15.0$ in

$M_{crBW} = \dfrac{f_r\, Ig}{y_{BW}} = \dfrac{0.7 \times \dfrac{170{,}910}{12}}{15} = 702.6$ k-ft — Minimum reinforcement is based on the requirement that $\Phi_b \times M_n$ is greater than the lesser of $1.2 \times M_{crBW}$ and $1.33 \times M_u$

$\Phi_b M_n = 0.9 \times 1{,}010.5 = 909.5$ k-ft — Factored resistance

$1.33 \times M_u = 1.33 \times 282.4 = 375.6$ k-ft — Factored design load

$1.2 \times M_{crBW} = 1.2 \times 702.6 = 843.2$ k-ft — Cracking moment

$\Phi_b \times M_n > \min(1.33 \times M_u, 1.2 \times M_{crBW})$, Therefore, requirement met

Note: The designer should also check AASHTO LRFD 5.7.3.4 – Crack Control, AASHTO 5.10.3 – Spacing of Reinforcement and AASHTO 5.10.8 – Shrinkage and Temperature Reinforcement.

Design for shear:

$V_u = 94.1$ k — Factored shear from passive earth pressure

$s_x = d = 14.5$ in — AASHTO LRFD 5.8.3.4.2

$a_g = 1.5$ in — Maximum aggregate size

$$s_{xe} = s_x \frac{1.38}{a_g\left(\frac{1}{in}\right) + 0.63}$$ — Crack spacing parameter — AASHTO LRFD 5.8.3.4.2-5

$$= 14.5 \frac{1.38}{1.5\left(\frac{1}{in}\right) + 0.63} = 9.4 \text{ in}$$

$$\varepsilon_x = \frac{\left(\frac{M_u}{d} + V_u\right)}{E_s A_s}$$ — Longitudinal strain — AASHTO LRF5.8.3.4.2-4

$$= \frac{\left(\frac{282.4}{14.5/12} + 94.1\right)}{29000 \times 7.9} = 1.43\text{E-}003$$

$$\beta = \frac{4.8}{(1750\,\varepsilon_x)} \times \frac{51}{\left[s_{xe}\left(\frac{1}{in}\right) + 39\right]}$$ — AASHTO LRFD 5.8.3.4.2-2

$$= \frac{4.8}{(1750 \times 1.43\text{E}-003)} \times \frac{51}{\left[9.4\left(\frac{1}{in}\right) + 39\right]} = 2.4$$

$\theta_v = (29 + 3500 \times \varepsilon_x)$ deg — AASHTO LRFD 5.8.3.4.2-3

$= (29 + 3500 \times 1.43\text{E-}003)$ deg $= 34.0$ deg

$V_c = 0.0316 \times \beta\sqrt{(f'_c)}\ d \times H_{Backwall}$ — AASHTO LRFD 5.8.3.3-3

$= 0.0316 \times 12.4\sqrt{(4)}\ 14.5 \times 6.33 \times 12 = 169.8$ k

$V_n = 0.5 \times V_c = 0.5 \times 169.8 = 84.9$ k — AASHTO LRFD 5.8.2.4-1

$\Phi_v \times V_n = 0.9 \times 84.9 = 76.4$ k — Shear resistance

$\Phi_v \times V_n < V_u$ Therefore, shear reinforcement required

Check capacity with standard shear reinforcement (#4 stirrups spaced at 12" oc)

$A_v = 0.4$ in^2 (2 legs) — Shear reinforcement

s_v = 12 in Reinforcement spacing

$$V_s = \frac{A_v F_y \ d \cot(\theta_v)}{s_v}$$ AASHTO LRFD 5.8.3.3-4

$$= \frac{0.4 \times 60 \times 14.5 \cot(34.0)}{12} = 43.0 \text{ k}$$

$V_c + V_s + V_p$ = 169.8 + 43.0 + 0 = 212.8 kips AASHTO LRFD 5.8.3.3-1

$b_v = T_{wing}$ = 1.5 ft

$$d_v = \frac{M_n}{A_s f_y} = \frac{537.2x12}{7.9 \times 60} = 13.6 \text{ in.}$$

$0.25f'_c b_v d_v + V_p$ = 0.25 x 4 x (1.5 x 12) x 13.6+ 0 = 244.8 kips AASHTO LRFD 5.8.3.3-2

V_n = min. of AASHTO LRFD 5.8.3.3-1 and 5.8.3.3-2 = 212.8 kips

$V_r = \Phi_v \times V_n$ = 0.9 x 212.8 = 191.5 kips Factored nominal resistance

V_u = 94.1 k Factored design load

$V_r > V_u$ Therefore, design adequate

Therefore, use shear reinforcement: #4 stirrup spaced at 12”

PILE DESIGN:

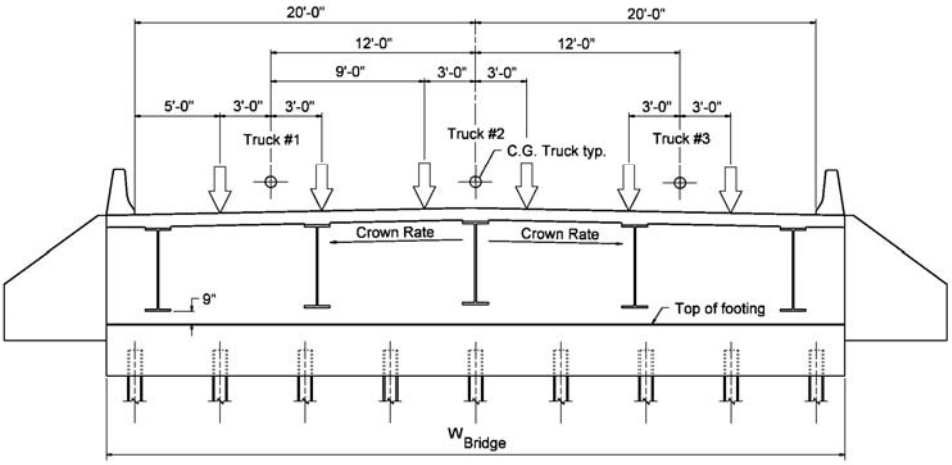

TRANSVERSE SECTION

The following design example is based on a 12 ft design lane width. However, smaller design lane widths may be used based on road classification.

$$L_{ftg} = \frac{W_{Bridge}}{\cos(\theta)} = \frac{43.33}{\cos(30)} = 50.0 \text{ ft}$$ Length of footing

$W_{ftg} = T_{backwal}$ = 2.5 ft Width of footing

D_{ftg} = 0.5 x Δh + H_{ftg}= 0.5 x 0.4 + 3= 3.2 ft Depth of footing

V_{LL} = 78.95 k — Live Load reaction per truck (HL-93) per lane (without impact)

$N_L = \text{round}\left(\frac{W_{clear}}{12\text{ ft}}\right) = \text{round}\left(\frac{40}{12\text{ ft}}\right)$ — Number of design lanes — AASHTO LRFD 3.6.1.1.1

= 3.0

$m = \begin{pmatrix} 1.2 \\ 1.0 \\ 0.85 \\ 0.65 \end{pmatrix}$ — 1 Lane Loaded; 2 Lanes Loaded; 3 Lanes Loaded; Greater than 3 Lanes Loaded — Multiple presence factor(s) — AASHTO LRFD 3.6.1.1.2-T1

$R_{ftg} = L_{ftg} \times D_{ftg} \times W_{ftg} \times \gamma_{RC}$ — Reaction of footing

$= 50.0 \times 3.2 \times 2.5 \times 0.150$

= 59.9 k

$D_{neat} = H_{Backwall} - T_{deck}$

= 6.33 – 8.5/12 = 5.6 ft — Depth of neatwork

$R_{neat} = D_{neat} \times W_{ftg} \times L_{ftg} \times \gamma_{RC}$ — Reaction of abutment neatwork

$= 5.6 \times 2.5 \times 50.0 \times 0.150 = 105.5$ k

R_{ss} = 604 k — Superstructure dead load reaction

$R_{DL} = R_{ss} + R_{ftg} + R_{neat}$ — Total dead load reaction for footing

= 604 + 59.9 + 105.5 = 769.4 k

Pile specifications:

K = 0.8	Effective length coefficient for column analysis	AISC Table C-C2.2
$F_{yp} = F_{yc}$ = 50 ksi	Yield stress of pile	
L_b = 11.57 ft	Depth to fixity point. This is generated from L-PILE, COM624, PileGROUP, or other analysis	

Assume HP10x42 piles

A_p = 12.4 in^2	Area of piles
I_y = 71.7 in^4	Moment of inertia of pile weak axis
I_x = 210 in^4	Moment of inertia of pile strong axis
J = 0.81 in^4	Torsional constant for pile section
r_y = 2.41 in	Radius of gyration of pile
S_y = 14.2 in^3	Elastic section modulus of pile, weak axis
Z_y = 21.8 in^3	Plastic section modulus of pile, weak axis
S_x = 43.4 in^3	Elastic section modulus of pile, strong axis

$Z_x = 48.3\ in^3$	Plastic section modulus of pile, strong axis	
$b_f = 10.1$ in	Flange width	
$t_f = 0.42$ in	Flange thickness	
$d_p = 9.7$ in	Section depth	
$t_w = 0.415$ in	Web thickness	
$n_p = 5$	Number of piles	(Begin design iteration with same number of piles as girders)

Pile loading:

The pile design assumes that each pile is equally loaded.

$R_T = 0$ k — Axial load on pile due to thermal loading (No thermal load in axial direction)

$R_{EH} = 0$ k — Axial load on piles due to passive earth pressure (Earth pressure is transferred to the girders)

$$R_{LLm} = \begin{bmatrix} 1\ [V_{LL}\ m(1-1) \\ 2\ [V_{LL}\ m(2-1) \\ 3\ [V_{LL}\ m(3-1) \end{bmatrix}$$

One lane loaded
Two lanes loaded
Three lanes loaded

$$R_{LLm} = \begin{pmatrix} 94.7 \\ 157.9 \\ 201.3 \end{pmatrix} k$$

One lane loaded
Two lanes loaded
Three lanes loaded

$R_{LL} = \max(R_{LLm}) = 201.3$ k — Maximum axial live load

Mt = 34.6 k-ft — Moment in each pile induced by thermal expansion (from pile analysis)

$$P_c = \begin{pmatrix} \frac{R_{DL}}{n_p} \\ \frac{R_{LL}}{n_p} \\ \frac{R_T}{n_p} \\ \frac{R_{EH}}{n_p} \end{pmatrix} \qquad P_c = \begin{pmatrix} 153.9 \\ 40.3 \\ 0.0 \\ 0.0 \end{pmatrix} k$$

Matrix of axial loads

Note to designer:
For bridges with over 4 lanes designer shall check lane load configuration to determine max axial load.

$$R = \eta \times \gamma_1 \times P_c \qquad R = \begin{pmatrix} 262.8 \\ 246.7 \\ 194.1 \\ 206.2 \end{pmatrix} k \begin{matrix} \text{Strength1} \\ \text{Strength2} \\ \text{Service1} \\ \text{Service2} \end{matrix}$$

$M_b = \begin{pmatrix} 0 \\ 0 \\ M_t \\ 0 \end{pmatrix}$ $\quad M_b = \begin{pmatrix} 0.0 \\ 0.0 \\ 34.6 \\ 0.0 \end{pmatrix}$ k-ft $\quad$ Matrix of pile moments

$Q = \eta \times \gamma_1 \times M_b \quad Q = \begin{pmatrix} 41.5 \\ 41.5 \\ 41.5 \\ 41.5 \end{pmatrix}$ k-ft

$P_u = \max(R_0, R_1, R_2, R_3) \quad P_u = 262.8$ k $\quad$ Controlling axial load

$M_u = \max(Q_0, Q_1, Q_2, Q_3) \quad M_u = 41.5$ k-ft $\quad$ Controlling moment

Determine axial capacity of piles:

$$\frac{K(L_b)}{r_y} = \frac{0.8(11.57 \times 12)}{2.41} = 46.1$$

$$\lambda = \left[\frac{(K \times L_b)}{(r_y \times \pi)}\right]^2 \times \frac{F_{yp}}{E_s} = \left[\frac{(0.8 \times 11.57 \times 12)}{(2.41 \times \pi)}\right]^2 \times \frac{50}{29{,}000} = 0.4$$ AASHTO LRFD 6.9.4.1-3

$$F_{cr} = \text{if}\left(\lambda \rangle 2.25, \frac{0.88}{\lambda}, 0.66^{\lambda}\right) F_{yp} \qquad F_{cr} = 42.9 \text{ ksi}$$ AASHTO LRFD 6.9.5.1-1&2

$\Phi P_n = \Phi_{cp} \times F_{cr} \times A_p = 0.7 \times 42.9 \times 12.4 = 372.0$ k

$$\frac{P_u}{\phi P_n} = \frac{262.8}{372} = 0.7$$

$\frac{P_u}{\phi P_n} < 1$ Therefore check interaction equation

Determine flexural capacity of piles:

Check Web Compactness:

Since this section is oriented for weak axis bending, the web is parallel and very near to the neutral axis. For this reason, buckling is not an issue, as the stresses are extremely small. For this reason, the web is inherently compact for weak axis bending. For strong axis bending, this is not the case, and the criteria must be checked.

$$\lambda_{pf} = 0.38\sqrt{\frac{E_s}{F_{yp}}} = 0.38\sqrt{\frac{29000}{50}} = 9.2$$ AASHTO LRFD 6.12.2.2.1-4

$$\lambda = \frac{b_f}{(2\,t_f)} = \frac{10.1}{(2 \times 0.42)} = 12.0$$ AASHTO LRFD 6.12.2.2.1-3

$$\lambda_{rf} = 0.83\sqrt{\frac{E_s}{F_{yp}}} = 0.83\sqrt{\frac{29000}{50}} = 20.0$$ AASHTO LRFD6.12.2.2.1-5

$\lambda_{pf} < \lambda$, Flange is Non-Compact

$M_y = F_{yp} \times S_y = 50 \times 14.2/12 = 59.2$ k-ft — Yield moment — AASHTO LRFD C6.12.2.2.1

$M_p = 1.5 \times F_{yp} \times S_y = 1.5 \times 50 \times 14.2 = 88.8$ k-ft — Plastic moment — AASHTO LRFD 6.12.2.2.1

$F_{yr} = 0.7 \times F_{yc} = 0.7 \times 50 = 35.0$ ksi — AASHTO LRFD A6.3.2

$M_r = Z_y \times F_{yr} = 21.8/12 \times 35.0 = 63.6$ k-ft — Limiting buckling moment

$$R_{pc} = \frac{M_p}{M_y} = \frac{88.8}{59.2} = 1.5$$

Plastification factor — AASHTO LRFD 6.2.1-4

$$M_y = \left[1-\left(1-\frac{S_y}{Z_y}\right)\left[\frac{(\lambda-\lambda_{pf})}{\left(0.45\sqrt{\frac{E_s}{F_{yp}}}\right)}\right]\right] F_{yp} \times$$

AASHTO LRFD 6.12.2.2.1-2

$$= \left[1-\left(1-\frac{14.2}{21.8}\right)\left[\frac{(12-9.2)}{\left(0.45\sqrt{\frac{29{,}000}{50}}\right)}\right]\right] 50 \times 21.8 = 82.4 \text{ k-ft}$$

$M_n = M_p$ if $\lambda \le \lambda_{pf}$, M_r if $\lambda \le \lambda_{rf}$, M_y if $\lambda_{pf} < \lambda < \lambda_{rf}$

$\lambda_{pf} = 9.2 < \lambda = 12.0 < \lambda_{rf} = 20.0$

Therefore, $M_n = M_y = 82.4$ k-ft — Nominal moment capacity

$\Phi_b \times M_n = 0.9 \times 82.4 = 74.2$ k-ft — Factored moment capacity

Interaction equation:

$M_{ux} = M_u$ $\quad M_{nx} = M_n$

$M_{uy} = 0$ $\quad M_{ny} = M_n$

Based on past VDOT experience only longitudinal bending needs to be considered. Therefore, out-of-plane bending is set to zero in interaction equation.

$$I_a = \frac{P_u}{2\phi P_n} + \left(\frac{M_{ux}}{\phi_b M_{nx}} + \frac{M_{uy}}{\phi_b M_{ny}}\right)$$

AASHTO LRFD 6.9.2.2-1

$$= \frac{0.7}{2} + \left(\frac{41.5}{0.9\times 82.4} + \frac{0}{0.9\times 82.4}\right) = 0.9$$

$$I_b = \frac{P_u}{\phi P_n} + \frac{8}{9}\left(\frac{M_{ux}}{\phi_b M_{nx}} + \frac{M_{uy}}{\phi_b M_{ny}}\right)$$

AASHTO LRFD 6.9.2.2-1

$$= 0.7 + \frac{8}{9}\left(\frac{41.5}{0.9\times 82.4} + \frac{0}{0.9\times 82.4}\right) = 1.2$$

$I = I_a$ if $\frac{P_u}{\phi P_n} < 0.2$, I_b if $\frac{P_u}{\phi P_n} \ge 0.2$

$\frac{P_u}{\phi P_n} = 0.7 \geq 0.2$ Therefore, $I = I_b = 1.2$

$I \geq 1$ Therefore, unsatisfactory. Need to redesign.

Redesign – pile loading:

By trial and error: $n_p = 9$

$$P_c = \begin{pmatrix} \frac{R_{DL}}{n_p} \\ \frac{R_{LL}}{n_p} \\ \frac{R_T}{n_p} \\ \frac{R_{EH}}{n_p} \end{pmatrix} \qquad P_c = \begin{pmatrix} 85.5 \\ 22.4 \\ 0.0 \\ 0.0 \end{pmatrix} k$$

Matrix of axial loads

Note to designer:
For bridges with over 4 lanes, designer shall review lane load configuration to maximize the axial load

$$R = \eta \times \gamma_1 \times P_c \qquad R = \begin{pmatrix} 146.0 \\ 137.1 \\ 107.9 \\ 114.6 \end{pmatrix} k \begin{matrix} \text{Strength1} \\ \text{Strength2} \\ \text{Service1} \\ \text{Service2} \end{matrix}$$

$$M_b = \begin{pmatrix} 0 \\ 0 \\ M_t \\ 0 \end{pmatrix} \qquad M_b = \begin{pmatrix} 0.0 \\ 0.0 \\ 34.6 \\ 0.0 \end{pmatrix} k\text{-ft}$$

Matrix of pile moments

$$Q = \eta \times \gamma_1 \times M_b \qquad Q = \begin{pmatrix} 41.5 \\ 41.5 \\ 41.5 \\ 41.5 \end{pmatrix} k\text{-ft}$$

$P_u = \max(R_0, R_1, R_2, R_3)$ $\quad P_u = 146.0$ k $\quad$ Controlling axial load

$M_u = \max(Q_0, Q_1, Q_2, Q_3)$ $\quad M_u = 41.5$ k-ft $\quad$ Controlling moment

Determine axial capacity of piles:

$$\frac{K(L_b)}{r_y} = \frac{0.8(11.57 \times 12)}{2.41} = 46.1$$

$$\lambda = \left[\frac{(K \times L_b)}{(r_y \times \pi)}\right]^2 \times \frac{F_{yp}}{E_s} = \left[\frac{(0.8 \times 11.57 \times 12)}{(2.41 \times \pi)}\right]^2 \times \frac{50}{29{,}000} = 0.4$$

AASHTO LRFD 6.9.4.1-3

$F_{cr} = \text{if}\left(\lambda > 2.25, \frac{0.88}{\lambda}, 0.66^{\lambda}\right) F_{yp}$ $F_{cr} = 42.9$ ksi AASHTO LRFD 6.9.5.1-1&2

$\Phi P_n = \Phi_{cp} \times F_{cr} \times A_p = 0.7 \times 42.9 \times 12.4 = 372.0$ k

$\frac{P_u}{\phi P_n} = \frac{146}{372} = 0.4$

$\frac{P_u}{\phi P_n} < 1$, Therefore, check interaction equation

Interaction equation:

$M_{ux} = M_u$ $M_{nx} = M_n$

$M_{uy} = 0$ $M_{ny} = M_n$

$$I_a = \frac{P_u}{2\phi P_n} + \left(\frac{M_{ux}}{\phi_b M_{nx}} + \frac{M_{uy}}{\phi_b M_{ny}}\right)$$ AASHTO LRFD 6.9.2.2-1

$$= \frac{0.4}{2} + \left(\frac{41.5}{0.9 \times 82.4} + \frac{0}{0.9 \times 82.4}\right) = 0.8$$

$$I_b = \frac{P_u}{\phi P_n} + \frac{8}{9}\left(\frac{M_{ux}}{\phi_b M_{nx}} + \frac{M_{uy}}{\phi_b M_{ny}}\right)$$ AASHTO LRFD 6.9.2.2-1

$$= 0.4 + \frac{8}{9}\left(\frac{41.5}{0.9 \times 82.4} + \frac{0}{0.9 \times 82.4}\right) = 0.9$$

$I = I_a$ if $\frac{P_u}{\phi P_n} < 0.2$, I_b if $\frac{P_u}{\phi P_n} \geq 0.2$

$\frac{P_u}{\phi P_n} = 0.4 \geq 0.2$ Therefore, $I = I_b = 0.9$

$I \leq 1$ Therefore, section is satisfactory.

Check P-delta effect:

$\Delta L_T = \gamma_{TU}\,[\alpha\,(t_{max} - t_{min})\,L_{thermal}]$ AASHTO LRFD 3.12.2.3-1

$= 1.2\,[6.5 \times 10^{-6}\,(120 - 0)\,75 \times 12] = 0.8$ in

$\Delta M = \Delta L_T \times P_u = 0.8/12 \times 146.0 = 10.2$ k-ft

$M_{ux} = M_u$ $M_{nx} = M_n$ $\Delta M_x = \Delta M$

$M_{uy} = 0$ $M_{ny} = M_n$ $\Delta M_y = 0$

Additional moments due to P-Delta effect
Based on past VDOT experience only longitudinal bending needs to be considered. Therefore out-of-plane bending is set to zero in interaction equation.

$$I_a = \frac{P_u}{2\phi P_n} + \left(\frac{\Delta M_x + M_{ux}}{\phi_b M_{nx}} + \frac{\Delta M_y + M_{uy}}{\phi_b M_{ny}}\right)$$ AASHTO LRFD 6.9.2.2-1

$$= \frac{0.4}{2} + \left(\frac{10.2 + 41.5}{0.9 \times 81.4} + \frac{0 + 0}{0.9 \times 81.4}\right) = 0.9$$

$$I_b = \frac{P_u}{\phi P_n} + \frac{8}{9}\left(\frac{\Delta M_x + M_{ux}}{\phi_b M_{nx}} + \frac{\Delta M_y + M_{uy}}{\phi_b M_{ny}}\right)$$ AASHTO LRFD 6.9.2.2-2

$$= 0.4 + \frac{8}{9}\left(\frac{10.2 + 41.5}{0.9 \times 81.4} + \frac{0 + 0}{0.9 \times 81.4}\right) = 1.0$$

$I = I_a$ if $\frac{P_u}{\phi P_n} < 0.2$, I_b if $\frac{P_u}{\phi P_n} > 0.2$

$\frac{P_u}{\phi P_n} = 0.4 \geq 0.2$ Therefore, $I = I_b = 1.0$

$I \leq 1$ Therefore, section is satisfactory.

Check to ensure axial load does not exceed capacity assuming damage during pile driving:

$\Phi P_n = \Phi_{cpd} \times F_{cr} \times A_p = 0.7 \times 42.9 \times 12.4 = 372.0$ k

Axial capacity assuming pile was damaged during driving.

$\frac{P_u}{\phi P_n} = \frac{146}{372} = 0.5$

$\frac{P_u}{\phi P_n} < 1$, Therefore, section is satisfactory

Check maximum service stress on piles:

Designer is responsible for obtaining geotechnical capacity of the bearing strata and verifying the pile design.

FOOTING DESIGN – VERTICAL PLANE:

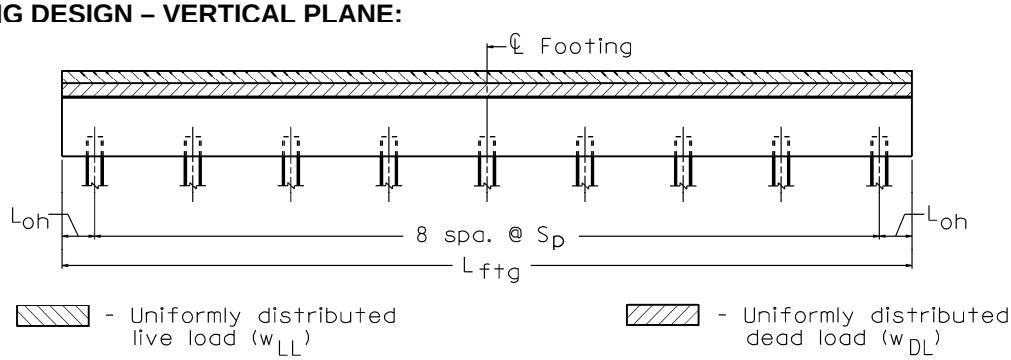

FOOTING ELEVATION

Footing loads:

Design as continuous beam with all load uniformly distributed along the footing

$L_{ftg} = \frac{W_{Bridge}}{\cos(\theta)} = \frac{43.33}{\cos(30)} = 50.0$ ft — Length of footing

tolerance = 3 in — Driving tolerance for piles

$Pile_{cc}$ = 9 in — Clear cover for piles

$L_{oh} = Pile_{cc} + tolerance + \frac{d_p}{2}$ — Cantilever footing length for distributed loads

$= (9 + 3 + \frac{9.7}{2})/12 = 1.4$ ft

$S_p = \frac{L_{ftg} - 2L_{oh}}{n_p - 1} + tolerance$ — Center to center spacing between the piles

$= \frac{50.0 - 2 \times 1.4}{9 - 1} + 3/12 = 6.2$ ft

Distributed dead load:

$R_{ftg} = L_{ftg} \times D_{ftg} \times W_{ftg} \times \gamma_{RC}$ — Reaction of footing

$= 50.0 \times 3.2 \times 2.5 \times 0.150 = 59.9$ k

$D_{neat} = H_{Backwall} - T_{deck} = 6.33 - 8.5/12 = 5.6$ ft — Depth of neatwork

$R_{neat} = D_{neat} \times W_{ftg} \times L_{ftg} \times \gamma_{RC}$ — Reaction of abutment neatwork

$= 5.6 \times 2.5 \times 50.0 \times 0.150 = 105.5$ k

$R_{ss} = 604$ k — Superstructure dead load reaction

$R_{DL} = R_{ss} + R_{ftg} + R_{neat}$ — Total dead load reaction for footing

$= 604 + 59.9 + 105.5 = 769.4$ k

$w_{DL} = \frac{R_{DL}}{L_{ftg}} = \frac{769.4}{50.0} = 15.4$ k/ft — Uniform distributed dead load along the footing

Distributed live load:

$V_{LL} = 78.95$ k — Live load reaction per truck (HL-93), per lane (without Impact)

$N_L = \text{round}\left(\frac{W_{clear}}{12\text{ ft}}\right) = \text{round}\left(\frac{40}{12\text{ ft}}\right) = 3$ — Number of design lanes AASHTO LRFD 3.6.1.1.1

$$R_{LLm} = \begin{bmatrix} 1\ [V_{LL}\ m(1-1) \\ 2\ [V_{LL}\ m(2-1) \\ 3\ [V_{LL}\ m(3-1) \end{bmatrix}$$

One lane loaded
Two lanes loaded
Three lanes loaded

$$R_{LLm} = \begin{pmatrix} 94.7 \\ 157.9 \\ 201.3 \end{pmatrix} k$$

One lane loaded
Two lanes loaded
Three lanes loaded

$R_{LL} = \max(R_{LLm}) = 201.3$ k — Maximum axial live load

$w_{LL} = \dfrac{R_{LL}}{L_{ftg}} = \dfrac{201.3}{50.0} = 4.0$ k/ft — Uniform distributed live load along the footing

Moment and Shear – Strength I

$w_u = \gamma_{DL} \times w_{DL} + \gamma_{LL} \times w_{LL} = 1.25 \times 15.4 + 1.75 \times 4.0 = 26.3$ k/ft

Overhang Moment and Shear:

$M_{oh} = \dfrac{w_u\ (L_{oh})^2}{2} = \dfrac{26.3\ (1.4)^2}{2} = 25.9$ k-ft — Overhang moment

$V_{oh} = w_u \times L_{oh} = 26.3 \times 1.4 = 36.9$ k — Overhang shear

Interior of Footing Moment and Shear

AISC Table 3-23:42 (assuming 4 equal spans)

$M_{intp} = 0.0772 \times w_u\ (S_p)^2$ — Maximum positive moment

$= 0.0772 \times 26.3\ (6.2)^2 = 76.8$ k-ft

$M_{intn} = 0.107 \times w_u\ (S_p)^2$ — Maximum negative moment

$= 0.107 \times 26.3\ (6.2)^2 = 106.4$ k-ft

$V_{int} = 0.607 \times w_u\ (S_p)$ — Maximum shear

$= 0.607 \times 26.3\ (6.2) = 98.1$ k

Design moment and shear:

$M_u = \max(M_{oh}, M_{intp}, M_{intN})$ $M_u = 106.4$ k-ft — Design moment

$V_u = \max(V_{oh}, V_{int})$ $V_u = 98.1$ k — Design shear

Design for flexure:

$h = H_{ftg} = 3.0$ ft — Height of section resisting flexure

$b = T_{Backwall} = 2.5$ ft — Width of section resisting flexure

Analyze VDOT Standard of 4 - #6 bars for adequacy

$A_s = 1.76$ in^2 — Amount of reinforcement in outermost layer of steel

$d = h - d_c = 36 - 3.5 = 32.5$ in — Depth to reinforcing rteel

$T = F_y \times A_s = 60 \times 1.76 = 105.6$ k — Total tension force in steel

$$a = \frac{T}{(0.85 \times f'_c \times b)}$$ — Depth of compression block

$$= \frac{105.6}{(0.85 \times 4 \times 30)} = 1.0 \text{ in}$$

$$M_n = T\left(d - \frac{a}{2}\right) = 105.6\left(32.5 - \frac{1}{2}\right) = 281.4 \text{ k-ft}$$

$\Phi_b \times M_n = 0.9 \times 281.4 = 253.3$ k-ft — Factored resistance

$M_u = 106.4$ k-ft — Factored design load

$\Phi_b \times M_n > M_u$ Therefore, strength adequate

Check minimum reinforcement requirement:

$f_r = 0.37\sqrt{f'c} = 0.37\sqrt{4} = 0.7$ ksi — Modulus of rupture — AASHTO LRFD 5.7.3.3.2

$$I_g = \left(\frac{1}{12}\right)(T_{Backwall})(H_{ftg})$$ — Gross moment of inertia — AASHTO LRFD 5.4.2.6

$$= \left(\frac{1}{12}\right)(2.5 \times 12)(3.0 \times 12)^3 = 116640.0 \text{ in}^4$$

$$y_{Bw} = \frac{H_{ftg}}{2} = \frac{3.0 \times 12}{2} = 18.0 \text{ in}$$

$$M_{crBW} = \frac{f_r\, Ig}{y_{BW}} = \frac{0.7 \times \frac{116640.0}{12}}{18}$$
$$= 399.6 \text{ k-ft}$$

Minimum reinforcement is based on the requirement that $\Phi_b \times M_n$ is greater than the lesser of $1.2 \times M_{crBW}$ and $1.33 \times M_u$

$\Phi_b M_n = 0.9 \times 281.4 = 253.3$ k-f — Factored resistance

$1.33 \times M_u = 1.33 \times 106.4 = 141.5$ k-ft — Factored design load

$1.2 \times M_{crBW} = 1.2 \times 399.6 = 479.5$ k-ft — Cracking moment

$\Phi_b \times M_n > \min(1.33 \times M_u, 1.2 \times M_{crBW})$ Therefore, requirement met

Note: The designer should also check AASHTO LRFD 5.7.3.4 – Crack Control, AASHTO 5.10.3 – Spacing of Reinforcement and AASHTO 5.10.8 – Shrinkage and Temperature Reinforcement.

Design for shear:

$V_u = 98.1$ k — Factored shear from passive earth pressure

$s_x = d = 32.5$ in — AASHTO LRFD 5.8.3.4.2

$a_g = 1.5$ in — Maximum aggregate size

$$s_{xe} = s_x \frac{1.38}{a_g\left(\frac{1}{in}\right) + 0.63}$$ — Crack spacing parameter — AASHTO LRFD 5.8.3.4.2-5

$$= 32.5 \frac{1.38}{1.5\left(\frac{1}{in}\right) + 0.63} = 21.1 \text{ in}$$

$$\varepsilon_x = \frac{\left(\frac{M_u}{d} + V_u\right)}{E_s A_s}$$ — Longitudinal strain — AASHTO LRFD 5.8.3.4.2-4

$$= \frac{\left(\frac{106.4}{32.5/12} + 98.1\right)}{29000 \times 1.76} = 2.69E-003$$

$$\beta = \frac{4.8}{(1750\,\varepsilon_x)} \times \frac{51}{\left[s_{xe}\left(\frac{1}{in}\right) + 39\right]}$$ — AASHTO LRFD 5.8.3.4.2-2

$$= \frac{4.8}{(1750 \times 2.69E-003)} \times \frac{51}{21.1\left[\left(\frac{1}{in}\right) + 39\right]} = 1.4$$

$\theta_v = (29 + 3500 \times \varepsilon_x)$ deg — AASHTO LRFD 5.8.3.4.2-3

$= (29 + 3500 \times 2.69E\text{-}003)$ deg $= 38.4$ deg

$V_c = 0.0316 \times \beta\sqrt{(f'_c)}\ d \times H_{Backwall}$ — AASHTO LRFD 5.8.3.3-3

$= 0.0316 \times 1.4\sqrt{(4)}\ 32.5 \times 6.33 \times 12 = 210.7$ k

$V_n = 0.5 \times V_c = 0.5 \times 169.8 = 105.3$ k — AASHTO LRFD 5.8.2.4-1

$\Phi_v \times V_n = 0.9 \times 84.9 = 94.8$ k — Shear resistance

$\Phi_v \times V_n < V_u$ Therefore shear reinforcement required

Check capacity with standard shear reinforcement (#4 stirrups spaced at 12")

$A_v = 0.4$ in^2 (2 legs) — Shear reinforcement

$s_v = 12$ in — Reinforcement spacing

$$V_s = \frac{A_v F_y\ d \cot(\theta_v)}{s_v}$$ — AASHTO LRFD 5.8.3.3-4

$$= \frac{0.4 \times 60 \times 14.5 \cot(34.0)}{12} = 43.0 \text{ k}$$

$V_c + V_s + V_p = 210.7 + 43.0 + 0 = 253.7$ kips — AASHTO LRFD 5.8.3.3-1

$b_v = h = 3.0$ ft

$$d_v = \frac{M_n}{A_s f_y} = \frac{281.4x12}{1.76 \times 60} = 32.0 \text{ in.}$$

$0.25f'_c b_v d_v + V_p = 0.25 \times 4 \times (3.0 \times 12) \times 32.0 + 0 = 1{,}152$ kips AASHTO LRFD 5.8.3.3-2

V_n = min. of AASHTO LRFD 5.8.3.3-1 and 5.8.3.3-2 = 253.7 kips

$V_r = \Phi_v \times V_n = 0.9 \times 253.7 = 228.3$ kips Factored nominal resistance

$V_r > V_u$ Therefore design adequate

Therefore, use shear reinforcement: #4 stirrup spaced at 12"

FOOTING DESIGN – HORIZONTAL PLANE:

Due to the rigidity of the footing in the horizontal plane (bending about the x-axis) yielding will occur in the piles first. Therefore, only AASHTO temperature and shrinkage reinforcement is provided.

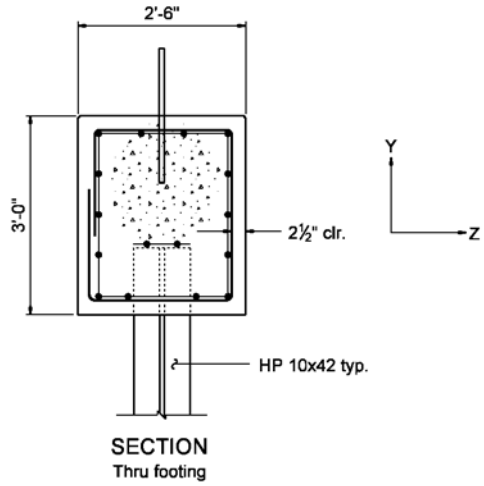

Temperature and shrinkage requirement: AASHTO LRFD 5.10.8

$h = h_{ftg} = 3.0$ ft Height of Section resisting flexure

$b = T_{Backwall} = 2.5$ ft Width of Section resisting flexure

$$A_{sReq} = \frac{1.3 \text{ x } b \text{ x } h}{2(b+h)F_y} \frac{k}{in}$$

Area of reinforcement required per foot

AASHTO LRFD 5.10.8-1

$$= \frac{1.3 \text{ x } 2.5 \text{ x } 3.0}{2(2.5+3.0)60} \frac{k}{in} = 0.2 \text{ in}^2$$

Try #4 bars spaced at 12 inches off center $A_s = 0.2 \text{ in}^2$ AASHTO LRFD 5.10.8-2

$0.11 \text{ in}^2 \leq A_S \leq 0.6 \text{ in}^2$ Therefore, requirement met

Use #4 bars spaced at 12 inches on center

Determine number of dowels required:

$L_{oh} = 1.4$ ft Cantilever footing length for distributed loads

$S_p = 6.153$ ft Clear spacing between the piles

$d_d = 0.875$ in — Diameter of dowels

$F_{yd} = 36$ ksi — Yield strength of dowels

$$A_{dowel} = \pi \frac{\left(d_d^2\right)}{4} = \pi \frac{\left(0.875^2\right)}{4} = 0.601 \text{ in}^2$$ — Area of dowel

$$CAP_{dowel} = \Phi_{vd} \times A_{dowel} \times F_{yd}$$
$$= 0.75 \times 0.601 \times 36 = 16.2 \text{ k}$$ — Capacity of one dowel

Check shear transfer requirement:

$L_b = 11.6$ ft — Effective pile length

$I_p = 71.7 \text{ in}^4$ — Moment of inertia of piles

$$\Delta L_T = 0.75\alpha \times (t_{max} - t_{min}) \times L_{Thermal}$$
$$= 0.75\alpha \times (120 - 0) \times (75 \times 12) = 0.5 \text{ in.}$$ — Change in length due to temperature in one direction

$$R_t = 1.5 \left[\frac{(3 \times E_s \times \Delta L_T \times I_p}{(L_b)^3}\right]$$ — Pile reaction at top of pile

$$= 1.5 \left[\frac{(3 \times 29{,}000 \times 0.5 \times 71.7}{(11.6 \times 12)^3}\right] = 1.8 \text{ k}$$

$R_{ut} = \gamma_{TU} \times R_t = 1.2 \times 1.8 = 2.2$ k — Factored pile reaction due to temperature expansion

$$R_f = \left(\frac{1}{2}\right)(P_h + P_f) \times D_{ftg}$$ — Resultant passive earth pressure on footing

$$= \left(\frac{1}{2}\right)(3.9 + 5.6) \times 3.0 = 15.2 \text{ klf}$$

$R_{uf} = \gamma_{EH} \times R_f = 1.35 \times 15.2 R_{uf} = 20.6$ klf — Factored passive earth pressure resultant

Solve for dowel spacing:

$$s_{dowel} = \frac{CAP_{dowel}}{\left[R_{uf} + \left(\frac{R_{ut}}{S_p}\right)\right]}$$ — Dowel spacing required

$$= \frac{16.2}{\left[20.6 + \left(\frac{2.2}{6.153}\right)\right]} = 9.32 \text{ in}$$

$s_{min} = 4\, d_d = 4 \times 0.875 = 3.5$ in

$s_{dowel} > s_{min}$, Therefore spacing adequate

$s_{dowels} = \text{Round}\left(\frac{s_{dowel}}{in}, 1\right)$ Rounds dowel spacing to the nearest inch

Space 7/8 in dowels @ 9 in

SEISMIC CONSIDERATIONS:

Designer is responsible for assuring the design adequately satisfies seismic requirements

DESIGN ANCHOR BOLTS FOR TEMPORARY SUPPORT:

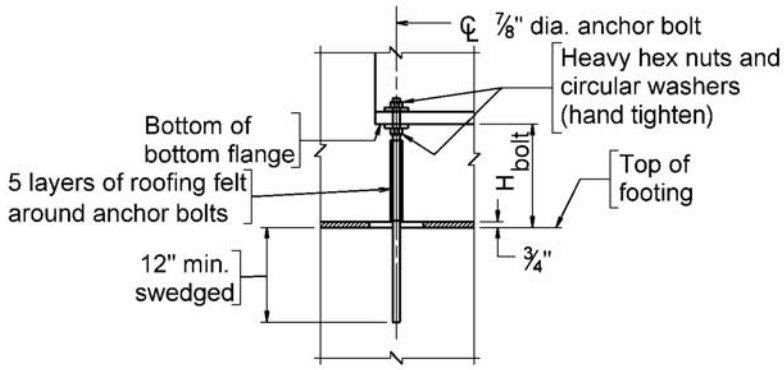

DETAIL A
At girder

Check load on anchor bolts vs. axial resistance:

$R_{steel} = 9.0$ k — Reaction of steel girder, diaphragms, etc. (unfactored)

$R_{CT} = 4.0$ k — Reaction of construction tolerances and other loads (unfactored)

$\gamma_{DL} = \gamma_{1_{0,0}}$ — Load factor for dead loads

$\gamma_{con} = 1.5$ — Load factor for construction loads

AASHTO LRFD 3.4.2.1

$Pu = \gamma_{DL} \times R_{steel} \times \gamma_{con} \times R_{CT} = 17.3$ k — Factored load on bolts

$= 1.25 \times 9.0 \times 1.5 \times 4.0 = 17.3$ k

$H_{bolt} = 9 \text{ in} + \Delta h = 9 \text{ in} + 4.66 = 13.66 \text{ in}$ — Unsupported height of anchor bolt

$F_{yb} = 55$ ksi — Yield strength of anchor bolt AISC Table 2.5

$d_b = 1.5$ in — Anchor bolt diameter (Typical diameter 1" to 2")

$$I_{bolt} = \frac{\left[\pi\left(\frac{d_b}{2}\right)^4\right]}{4} = \frac{\left[\pi\left(\frac{1.5}{2}\right)^4\right]}{4} = 0.2 \text{ in}^4$$

Anchor bolt moment of inertia

$A_{bolt} = \pi \times \frac{d_b^2}{4} = \pi \times \frac{1.5^2}{4} = 1.8 \text{ in}^2$ Anchor bolt area

$r_{bolt} = \sqrt{\left(\frac{I_{bolt}}{A_{bolt}}\right)} = \sqrt{\left(\frac{0.2}{1.8}\right)} = 0.4 \text{ in}$ Radius of gyration of anchor bolt

$K = 1.2$ K factor of bolt acting as a column

$KLrFactor = K\frac{H_{bolt}}{r_{bolt}} = 1.2\frac{13.66}{0.4} = 43.7$

$\lambda = \left[\frac{(K \times H_{bolt})}{(r_{bolt} \times \pi)}\right]^2 \times \frac{F_{yb}}{E_s}$ AASHTO LRFD 6.9.4.1-3

$= \left[\frac{(1.2 \times 13.66)}{(0.4 \times \pi)}\right]^2 \times \frac{50}{29{,}000} = 0.4$

$F_{cr} = \text{if}\left(\lambda > 2.25, \frac{0.88}{\lambda}, 0.66^{\lambda}\right) F_{yb}$ $F_{cr} = 47.2$ ksi

$\Phi \times P_n = \Phi_{cp} \times F_{cr} \times A_{bolt} = 0.70 \times 47.2 \times 1.8$

$\Phi \times P_n = 58.4$ k

$P_u = 17.3$ k

$\Phi \times P_n > P_u$ Therefore, axial strength adequate

Check bending in shortest anchor bolt:

$H_{bolt} = 9$ in Height of anchor bolt for exterior girder(s)

$S_{bolt} = \frac{I_{bolt}}{\left(\frac{d_b}{2}\right)} = \frac{0.2}{\left(\frac{1.5}{2}\right)} = 0.27 \text{ in}^3$ Section modulus of bolt

$\mu_s = 0.6$ Coefficient of static friction between the girder flange and the steel bearing plates

$L_p = L_b = 11.6$ ft Effective length of pile

Bending in the anchor bolts is caused by two actions. The first scenario occurs when the force mobilized by the piles is greater than the friction force generated by thermal movement in the girders. When this occurs the girder will slide bending the bolt before it moves the piles. The second scenario occurs when the friction force in the girder is considerably larger than the force generated by the piles. In this instance the force from the piles controls bending the bolts before the girder slides. The lower force value is used since this condition occurs first.

$F_f = P_u \frac{\mu_s}{2} = 17.3\frac{0.6}{2} = 5.2$ k Force required for the anchor bolt to slip (friction force)

$n_p = 9.0$ Number of piles

$n_b = 5$ Number of girders

$\Delta L_T = 0.75\alpha \times (t_{max} - t_{min}) \times L_{Thermal}$

$= 0.75\alpha \times (120 - 0) \times (75 \times 12) = 0.5$ in.

$$P_b = \frac{\gamma_{TU} \cdot (\Delta L_T \cdot E_s)}{\left[\left(\frac{L_p^3}{3 \cdot n_p \cdot I_p}\right) + \left(\frac{H_{bolt}^3}{3 \cdot n_b \cdot I_{bolt}}\right) + \frac{(L_p^2 \cdot H_{bolt})}{2 \cdot n_p \cdot I_p}\right]}$$

$$= \frac{1.2(0.5 \times 29{,}000)}{\left[\left(\frac{(11.6 \times 12)^3}{3 \times 9 \times 71.7}\right) + \left(\frac{9^3}{3 \times 5 \times 0.2}\right) + \frac{(11.6 \times 12)^2 \times 9}{2 \times 9 \times 71.7}\right]}$$

$= 10.7$ k

$P_{control} = \text{if}(P_b > F_f, F_f, P_b)$ Controlling factored load at top of anchor bolt

$P_{control} = 5.2$ k Use load due to bolt slippage

$M_u = P_{control} \times H_{bolt} = 5.2 \times (9/12) = 3.9$ k-ft Factored moment induced into anchor bolt

Check moment capacity:

$M_n = F_{yb} \times S_{bolt} \times n_b = 50 \times 0.27 \times 5 = 7.6$ k-ft Moment capacity of bolt

$\Phi_{bab} \times M_n = 1.0 \times 7.6 = 7.6$ k·ft Nominal resistance

$M_u = 3.9$ k·ft Factored design load

$\Phi_{bab} \times M_n > M_u$ Therefore, bending strength adequate.

Check interaction equation:

$\frac{P_u}{\phi P_n} = \frac{17.3}{58.4} = 0.3$ $M_{ux} = M_u$ $M_{nx} = M_n$

$M_{uy} = 0$ $M_{ny} = M_n$

Based on past VDOT experience only bending in the plane of the bridges needs to be considered. Therefore out-of-plane bending is set to zero in interaction equation.

$$I_a = \frac{P_u}{2 \cdot \phi P_n} + \left(\frac{M_{ux}}{\phi_{bab} \cdot M_{nx}} + \frac{M_{uy}}{\phi_{bab} \cdot M_{ny}}\right)$$ AASHTO LRFD 6.9.2.2-1

$$= \frac{0.3}{2} + \left(\frac{3.9}{1.0 \times 7.6} + \frac{0}{1.0 \times 7.6}\right) = 0.7$$

$$I_h = \frac{P_u}{\phi P_n} + \frac{8}{9}\left(\frac{M_{ux}}{\phi_{bab} \cdot M_{nx}} + \frac{M_{uy}}{\phi_{bab} \cdot M_{ny}}\right)$$ AASHTO LRFD 6.9.2.2-2

$$= 0.3 + \frac{8}{9}\left(\frac{3.9}{1.0 \times 7.6} + \frac{0}{1.0 \times 7.6}\right) = 0.7$$

$I = I_a$ if $\frac{P_u}{\phi P_n} < 0.2$, I_b if $\frac{P_u}{\phi P_n} \geq 0.2$ Therefore, $I = 0.7$

$I < 1$ Therefore, section is satisfactory.

Check shear capacity of anchor bolts:

$A_b = A_{bolt} = 1.8\ in^2$ — Area of anchor bolt (nominal) AASHTO LRFD 6.13.2.12

$F_{ub} = 60$ ksi — Specified minimum tensile strength AASHTO LRFD 6.4.3.1

$N_s = 2$ — Number of shear planes

$R_n = 0.48 \times \cdot A_b \times F_{ub} \times N_s$ — AASHTO LRFD 6.13.2.12

$= 0.48 \times 1.8 \times 60 \times 2 = 101.8$ k

$\Phi \times V_n = \Phi_{vab} R_n = 0.75 \times 101.8 = 76.3$ k

$V_u = P_{control} = 5.2$ k

$\Phi \times V_n > V_u$ Therefore, shear capacity adequate.

DESIGN PLATE A:

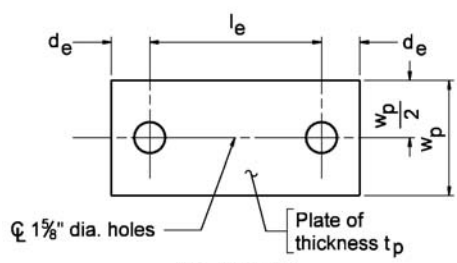

PLATE A
Not to scale

Assume an initial plate size:

$b_f = B_{bottomflange} = 12.0$ in — beam/girder flange width

$d_e = 1.5$ in — Clearance between the plate ends and anchor bolt centerline

$L_e = \frac{(b_f - d_e)}{\cos(\theta)} = \frac{(12.0 - 1.5)}{\cos(30)} = 12.1$ in — Span between anchor bolts

$w_p = 5$ in — Plate width

$t_p = 1$ in — Minimum plate thickness

$F_{ypl} = 50$ ksi — Yield strength of plate

$A_p = w_p \times t_p = 5 \times 1 = 5.0\ in^2$ — Area of plate

$I_p = \frac{(w_p \times t_p^3)}{12} = \frac{(5 \times 1^3)}{12} = 0.4\ in^4$ — Moment of inertia of plate

$S_p = \frac{I_p}{\left(\frac{t_p}{2}\right)} = \frac{0.4}{\left(\frac{1}{2}\right)} = 0.8\ in^3$ — Section modulus of plate

Check plate strength:

$w = \frac{P_u}{b_f} = \frac{10.7}{12} = 17.25$ klf Loading along length of Plate A

$V_u = \frac{(w \times L_e)}{2} = \frac{(17.25 \times (12.1/12))}{2} = 8.7$ k Factored shear force at anchor bolt

$\Phi_{vs} \times V_n = \Phi_{vs} \times F_{ypl} \times A_p = 1.0 \times 50 \times 5 = 250.0$ k

$\Phi_{vs} \times V_n > V_u$, Therefore, shear capacity adequate

$M_u = \frac{(w \times L_e^2)}{8} = \frac{(17.25 \times (12.1/12)^2)}{8} = 2.2$ k-ft Factored bending moment in Plate A

$M_n = F_{ypl} \times S_p = 50 \times 0.8 = 3.3$ k-ft

$\Phi_f \times M_n = 1.0 \times 3.3 = 3.3$ k-ft Moment capacity of plate

$\Phi_f \times M_n > M_u$ Therefore design adequate

Note: Plate B will function as a plate washer and no structural design is necessary.

Thickness of EPS layer:

The EPS layer is intended to reduce the passive earth pressure exerted on the abutment due to the thermal movement of the bridges.

$\Delta_L = \alpha (t_{max} - t_{min}) \cdot L_{Thermal}$ Change in length due to temperature
$= 6.5 \times 10^{-6} (120 - 0)(75 \times 12) = 0.7$ in in one direction.

$EPS_t = 10(0.01 \times H_{Backwall} + 0.67 \Delta_L)$

$= 10(0.01 \times (6.33 \times 12) + 0.67 \times 12.3) = 12.3$ in

$EPS_t = \text{ceil}\left(\frac{EPS_t}{1\text{in}}\right) \cdot 1$ in

Thickness of EPS layer required: $EPS_t = 13.0$ in

NOTE: DESIGN FOR PRESTRESSED CONCRETE BEAMS IS SIMILAR

LATERAL BUTTRESS FORCE DERIVATION:

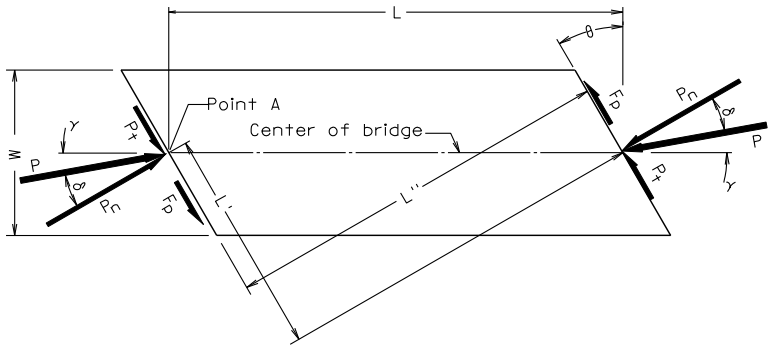

F_p	Total lateral pile force required to resist rotation of superstructure (kips)
$P = \dfrac{qW}{\cos(\theta - \delta)}$	Full passive force across the width of the bridge (kips)
q	Passive Force per foot across backwall
$P_n = P \cdot \cos\delta$	Component of "P" normal to the backwall (kips)
$P_t = P \cdot \sin\delta$	Component of "P" tangential to backwall (kips)
δ	Angle of Wall Friction
θ	Skew angle of bridge
α	$\theta - \delta$
$q = \dfrac{1}{2} \cdot \gamma_s \cdot K_p \cdot H^2$	Resultant of passive force at a point along the backwall. (kips/LF)
H	Height of integral abutment (ft)
K_p	Coefficient of passive earth pressure
γ_s	Unit weight of soil (pcf)
$L' = L \cdot \sin\theta$	Moment arm for normal passive force
$L'' = L \cdot \cos\theta$	Moment arm for tangential passive force

$$\Sigma M_A = 0 = (P_n \cdot L') - (P_t \cdot L'') - (F_p \cdot L'')$$

$$0 = P_n \cdot L' - P_t \cdot L'' - F_p \cdot L''$$

$$F_p \cdot L'' = P_n \cdot L' - P_t \cdot L''$$

$$F_p = \frac{P_n \cdot L' - P_t \cdot L''}{L''} \quad \Rightarrow \quad L' = L \cdot \sin\theta;\ \ L'' = L \cdot \cos\theta;\ \ P_t = P \cdot \sin\delta\ ;\ P_n = P \cdot \cos\delta$$

$$F_p = \frac{(P \cdot \cos\delta \cdot L \cdot \sin\theta) - (P \cdot \sin\delta \cdot L \cdot \cos\theta)}{(L \cdot \cos\theta)}$$

$$F_p = \frac{(P \cdot \cos\delta \cdot \sin\theta) - (P \cdot \sin\delta \cdot \cos\theta)}{\cos\theta} \quad \Rightarrow \quad P = \frac{qW}{\cos(\theta - \delta)}$$

$$F_p = \frac{q \cdot W}{\cos(\theta - \delta)} \cdot \frac{(\cos\delta \cdot \sin\theta) - (\sin\delta \cdot \cos\theta)}{\cos\theta} \quad \Rightarrow \quad (\cos\delta \cdot \sin\theta - \sin\delta \cdot \cos\theta) = \sin(\theta - \delta)$$

$$F_p = \frac{q \cdot W}{\cos(\theta - \delta)} \cdot \frac{\sin(\theta - \delta)}{(\cdot \cos\theta)}$$

$$\boxed{F_p = \frac{q \cdot W \cdot \tan(\theta - \delta)}{\cos\theta}}$$

For skew angles, $\theta \leq \delta$, assume $\delta = \theta$, therefore $R_p = 0$.

$$F_p = \frac{q \cdot W \cdot \tan(\theta - \theta)}{\cos\theta} = \frac{q \cdot W \cdot \tan(0)}{\cos\theta} = 0$$

Field observations to date indicate superstructure rotation with skew angles as low as 5º. It appears that the shear force at the backwall/backfill interface is not always mobilized. Therefore, it is recommended that the interaction angle of friction, δ between the soil and backwall be set to zero. Therefore, it can be assumed that the P_t and P_n forces are not mobilized, but only P_n remains. Therefore, these modifications can be made to the following equation:

$$\Sigma M_A = 0 = (P_n \cdot L') - (P_t \cdot L'') - (F_p \cdot L'')$$

Or written as:

$$\Sigma M_A = 0 = (P \cdot L') - (F_p \cdot L'')$$

$$0 = P \cdot L' - F_p \cdot L''$$

$$F_p \cdot L'' = P \cdot L'$$

$$F_p = \frac{P \cdot L'}{L''} \quad \Rightarrow \quad L' = L \cdot \sin\theta; \quad L'' = L \cdot \cos\theta$$

$$F_p = \frac{(P \cdot L \cdot \sin\theta)}{(L \cdot \cos\theta)}$$

$$F_p = \frac{(P \cdot \sin\theta)}{(\cos\theta)} \quad \Rightarrow \quad P = \frac{qW}{\cos\theta}$$

$$F_p = \frac{q \cdot W}{\cos\theta} \cdot \frac{\sin\theta}{\cos\theta}$$

$$\boxed{F_p = \frac{q \cdot W \cdot \tan\theta}{\cos\theta}}$$

To ensure conservatism in the design, it is suggested that the above equation be used in all cases.

It should be noted that the force calculated using these equations is the theoretical force required to restrain all lateral movement. If no lateral restraint is intended or required, this force will be considerably smaller. Lateral restraint should be considered when transverse displacements can interfere with performance or adjacent structures (e.g. parallel bridges, MSE walls, utilities, etc.). To determine the forces on the piles when transverse displacements are not restrained use software such as COM624, L-PILE or other similar software for analysis.

U-BACK WING DETAIL:

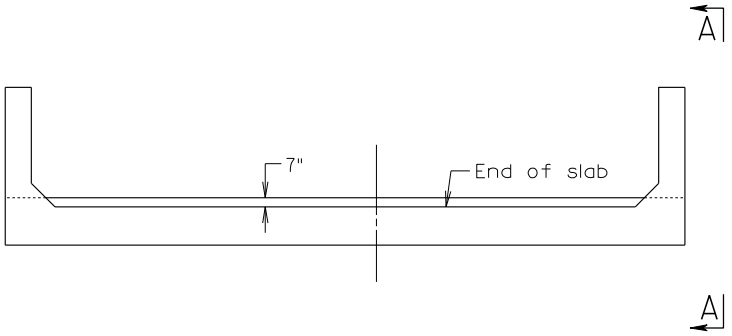

PLAN

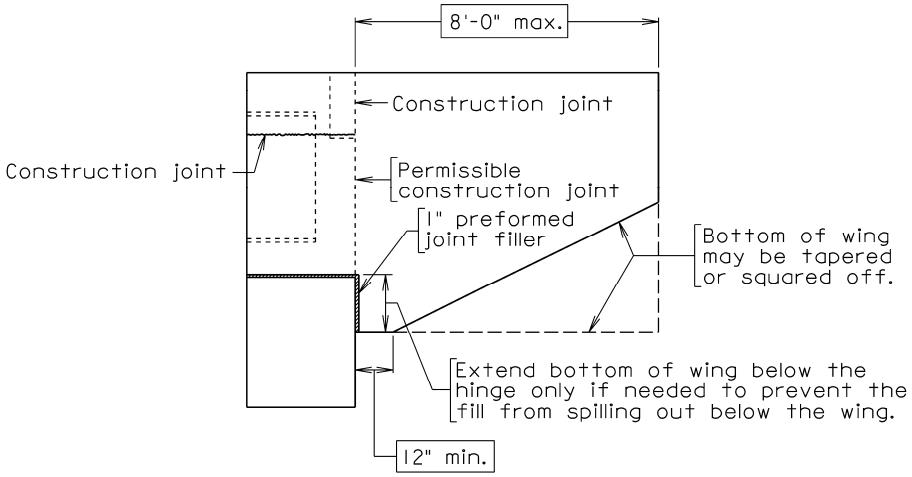

VIEW A-A

Items in blocks are for designer's information only and are not to be placed on the plans.

ABUTMENTS **FULL INTEGRAL ABUTMENT** **U-BACK WING DETAIL**	VOL. V - PART 2 DATE: 06Feb2012 SHEET 39 of 42 FILE NO. 17.04-39

ALTERNATE WING AND REINFORCEMENT DETAIL:

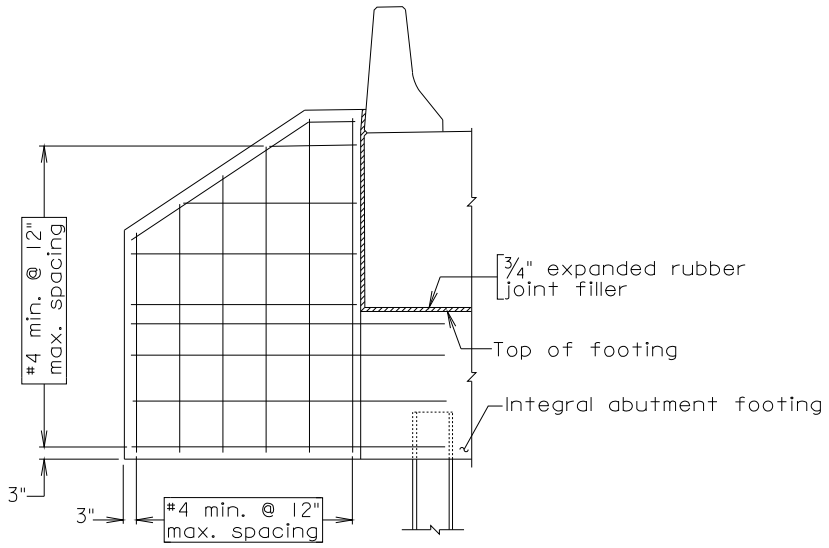

WING AND REINFORCEMENT DETAIL
Wings integral with footing

Wing shall be designed for moment and shear developed due to passive earth pressures. The designer shall ensure that the connection between the wing and the footing (including reinforcing steel embedment) is sufficient.

Items in blocks are for designer's information only and are not to be placed on the plans.

STAGED CONSTRUCTION DETAILS:

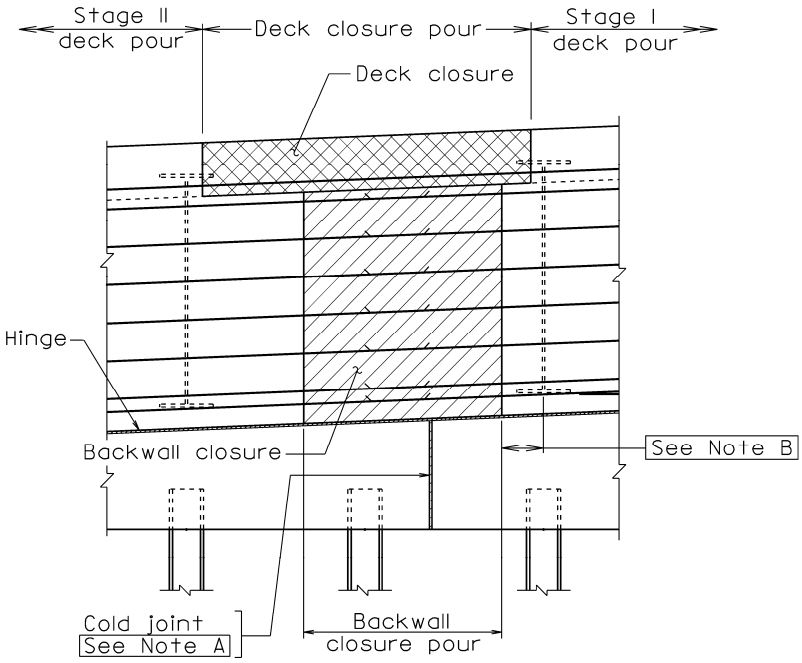

FULL INTEGRAL ABUTMENT - WITH DECK CLOSURE DETAIL

Items in blocks are for designer's information only and are not to be placed on the plans.

The location of the deck closure pour is subject to the staging sequence established by the designer. Deck closures should be used when noncomposite DL deflections > 2 ½ ". Backwall closures may be poured with the deck as long as the concrete in the backwall remains plastic throughout the pour by use of retarders, etc.

Note A: A cold joint shall be provided between the two phases of the integral abutment pile cap, separated by $^1/_2$" preformed joint filler. No steel shall penetrate the joint. The joint shall be oriented parallel to the bridge centerline.

Note B: $\frac{b_f}{2} + 6''$ where b_f is the width of the widest flange.

** Min. distance equals lap length + 6".

ABUTMENTS **FULL INTEGRAL ABUTMENT** **STAGED CONSTRUCTION DETAILS**	VOL. V - PART 2 DATE: 06Feb2012 SHEET 41 of 42 FILE NO. 17.04-41

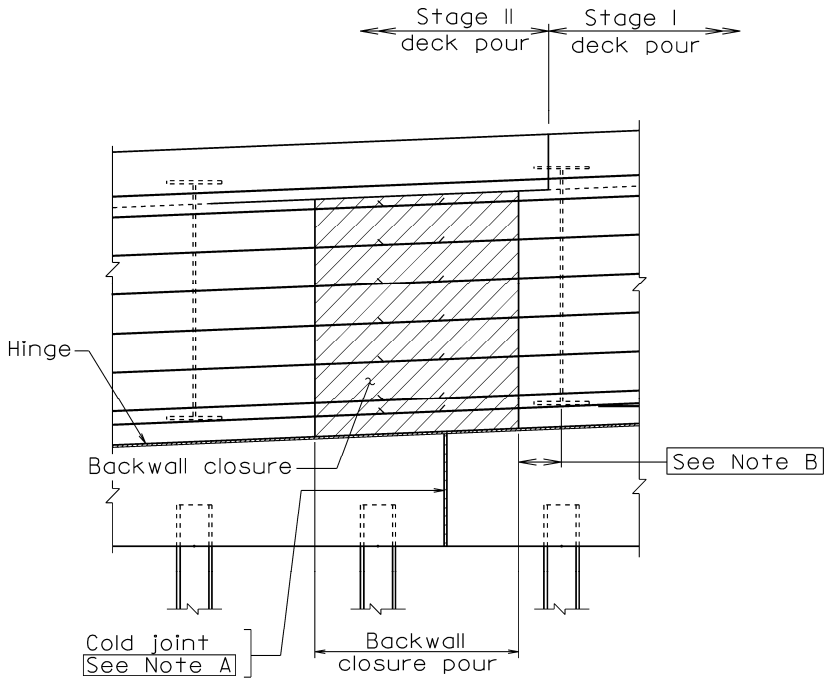

FULL INTEGRAL ABUTMENT - WITHOUT DECK CLOSURE DETAIL

Items in blocks are for designer's information only and are not to be placed on the plans.

Backwall closures may be poured with the deck as long as the concrete in the backwall remains plastic throughout the pour by use of retarders, etc.

Note A: A cold joint shall be provided between the two phases of the integral abutment pile cap, separated by $^1/_2$" preformed joint filler. No steel shall penetrate the joint. The joint shall be oriented parallel to the bridge centerline.

Note B: $\frac{b_f}{2} + 6''$ where b_f is the width of the widest flange.

** Min. distance equals lap length + 6".

ABUTMENTS **FULL INTEGRAL ABUTMENT** **STAGED CONSTRUCTION DETAILS**	VOL. V - PART 2 DATE: 06Feb2012 SHEET 42 of 42 FILE NO. 17.04-42

GENERAL INFORMATION:

This section of the chapter establishes the general practices/requirements necessary for the completion of a plan detail sheets for a typical full integral abutment containing both steel beams/girders and prestressed concrete beams. Included are sample plan detail sheets necessary for providing a complete bridge plan assembly.

For location of the full integral abutment plan detail sheets in the bridge plan assembly, see File No. 01.02-4.

The practices for the completion of interior sheets and standard detail sheets contained in Chapter 4 shall be adhered to.

This sheet is intentionally left blank

STATE	FEDERAL AID ROUTE	FEDERAL AID PROJECT	STATE ROUTE	STATE PROJECT	SHEET NO.
VA.	—		123	0123-456-789, B678	4

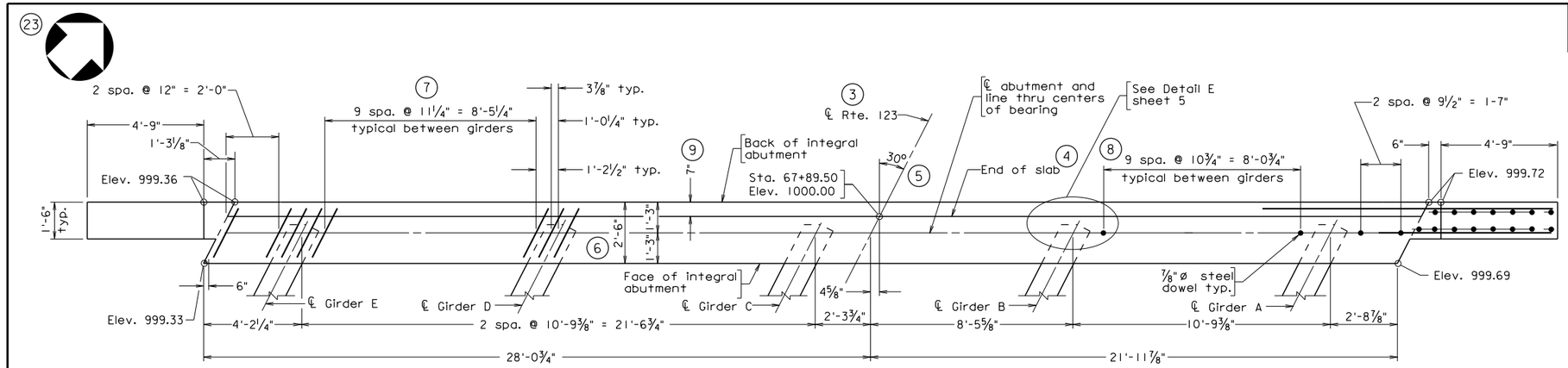

PLAN (1)

Notes: (24)

Portion of the integral abutment above the hinge shall be placed and cured to a minimum compressive strength of 3000 psi prior to the placement of the deck concrete.

Backfill behind integral abutment footing shall not be placed until concrete in the upper portion of the integral abutment attains a minimum compressive strength of 3000 psi. The remainder of the backfill behind both bridge abutments shall be placed such that the differential in the height of fill at each abutment shall not exceed 6".

The portion of abutment above the hinge shall be cast when the least thermal movement of the superstructure can be expected during the period of initial set of concrete, e.g. at dusk or during an expected uniformly cloudy day.

Tolerance for driving piles shall be as specified for "Column supports for bent caps" in Section 403, Table IV-1 of the Specifications.

See sheet 10 for end of girder details.

All chamfers shall be ¾".

Elevations in plan view are at top of slab.

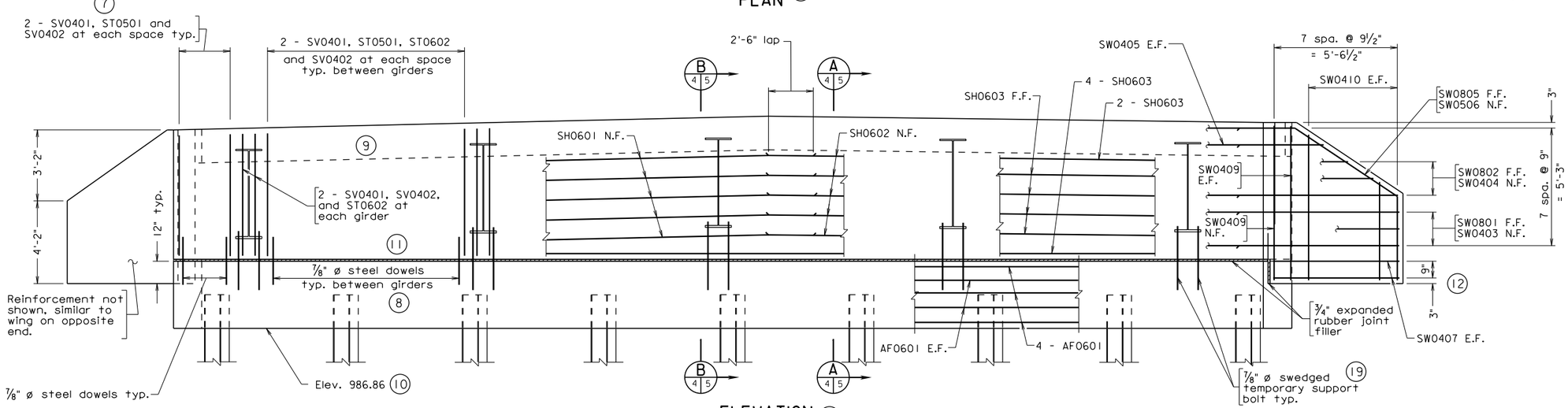

ELEVATION (1)

TABLE OF BOTTOM OF GIRDER ELEVATIONS				
Girder A	Girder B	Girder C	Girder D	Girder E
993.90	994.04	994.09	993.84	993.58

For location of Point of Elevation on bottom of girders, see Temporary Support Bolt Detail, sheet 5.

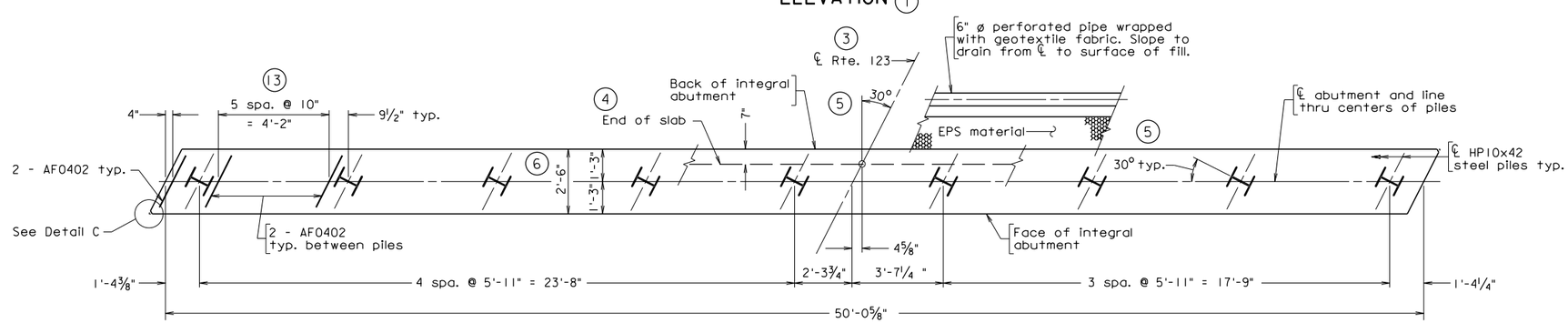

PILE AND FOOTING REINFORCEMENT PLAN

AF0601 bars are not shown for clarity

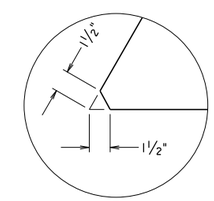

DETAIL C

Typical at acute angles

Not to scale

999-90.004.dgn

VDOT S&B DIVISION
RICHMOND, VA
STRUCTURAL ENGINEER

ABUTMENTS
FULL INTEGRAL ABUTMENT SAMPLE PLANS
ABUTMENT DETAILS SHEET - STEEL BEAMS/GIRDERS

Scale: ⅜" = 1'-0" unless otherwise noted (1)

©2016, Commonwealth of Virginia

No.	Description	Date
	Revisions	

COMMONWEALTH OF VIRGINIA
DEPARTMENT OF TRANSPORTATION

STRUCTURE AND BRIDGE DIVISION

(26) ABUTMENT A

Designed: ABC
Drawn: DEF
Checked: GHI

Date: May 2016

Plan: 999-

PART 2
DATE: 18May2016
SHEET 3 of 10
FILE NO. 17.05-3

STATE	FEDERAL AID ROUTE	FEDERAL AID PROJECT	STATE ROUTE	STATE PROJECT	SHEET NO.
VA.	—		123	0123-456-789, B678	5

(27)

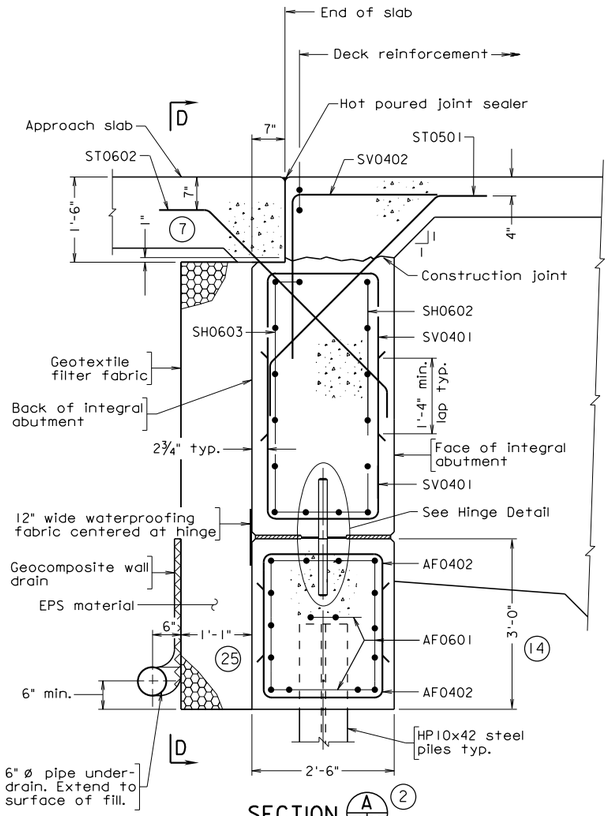

SECTION A/4 5 (2)
Between girders

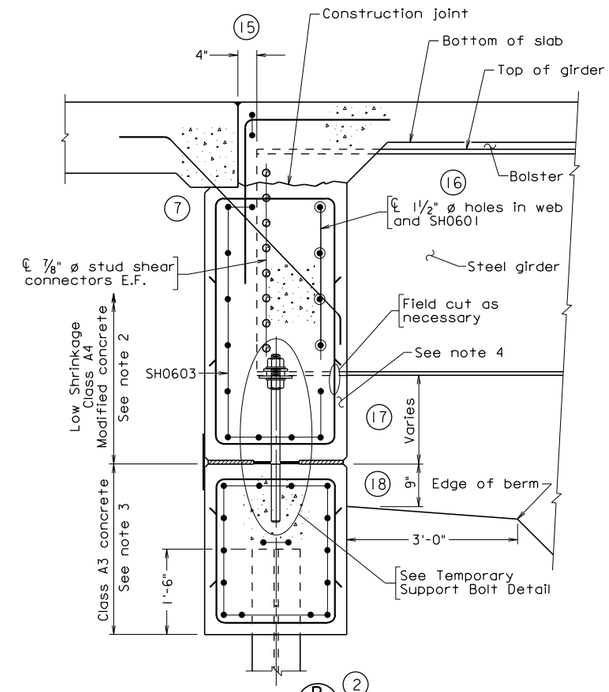

SECTION B/4 5 (2)
At girders
For details not shown, see Section A-A

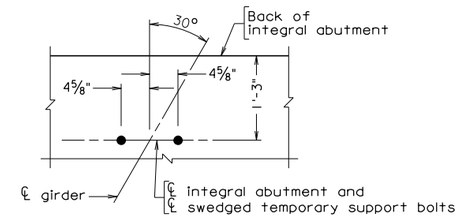

TYPICAL TEMPORARY SUPPORT BOLT LAYOUT
Not to scale

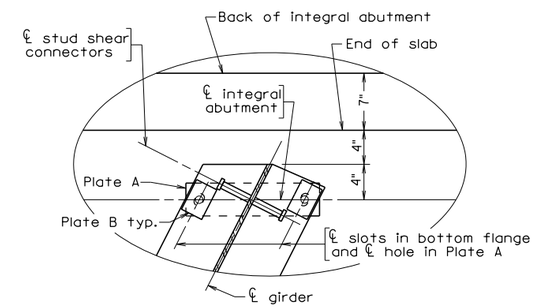

DETAIL E
Not to scale

Notes: (24)

1. All chamfers shall be ¾".
2. Low Shrinkage Class A4 Modified concrete and Corrosion Resistant Reinforcing (CRR) steel, same Class as deck, is included with superstructure quantities.
3. Class A3 concrete and CRR steel, Class I, is included with sub-structure quantities.
4. Extreme care must be taken, when placing concrete, to eliminate any voids under girder flanges.
5. Cost of dowels, temporary support bolts, plates, washers, and temporary supports shall be included in the bid price for structural steel. Cost of neoprene and roofing felt are to be included in other bid items.

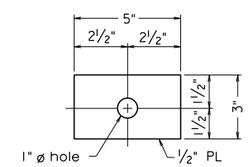

(21) PLATE B
Not to scale

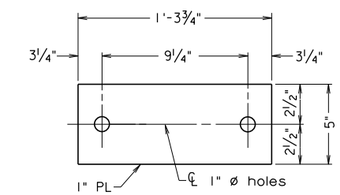

(20) PLATE A
Not to scale

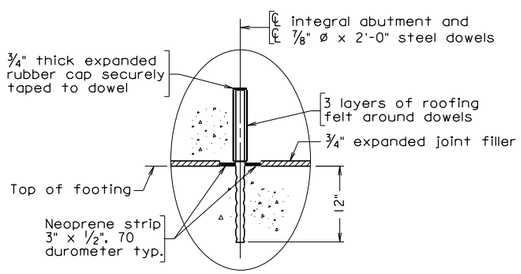

HINGE DETAIL
Not to scale

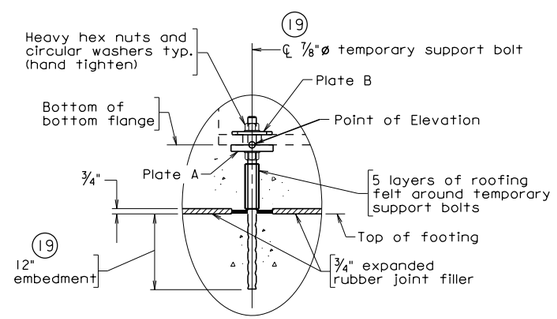

TEMPORARY SUPPORT BOLT DETAIL
Not to scale

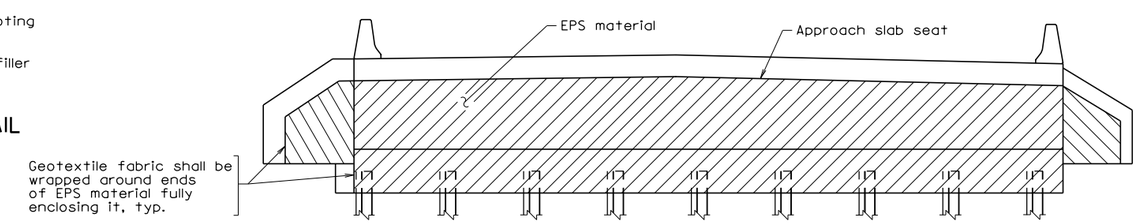

VIEW D-D
Not to scale

999-90_005.dgn

(28)

(29)

VDOT S&B DIVISION
RICHMOND, VA
STRUCTURAL ENGINEER

ABUTMENTS
FULL INTEGRAL ABUTMENT SAMPLE PLANS
ABUTMENT DETAILS SHEET - STEEL BEAMS/GIRDERS

(2)
Scale: ½" = 1'-0" unless otherwise noted

©2016, Commonwealth of Virginia

No.	Description	Date
	Revisions	

COMMONWEALTH OF VIRGINIA
DEPARTMENT OF TRANSPORTATION

STRUCTURE AND BRIDGE DIVISION

(26) ABUTMENT A
SECTIONS AND DETAILS

Designed: ABC
Drawn: DEF
Checked: GHI

Date: May 2016
Plan: 999-

PART 2
DATE: 18May2016
SHEET 4 of 10
FILE NO. 17.05-4

CHECK LIST FOR SAMPLE PLANS – STEEL BEAMS / GIRDERS

1. Show full PLAN and ELEVATION views along with a PILE AND FOOTING REINFORCEMENT PLAN for a full integral abutment complete with dimensions at a scale of $^3/_8$" = 1'-0". Regardless of skew, the elevation view should be projected down from the plan view.

2. Show SECTION (typical) view through abutment complete with dimensions at a scale of $^1/_2$" = 1'-0" unless scale is insufficient to show adequate details.

3. Label the location centerline/baseline as shown on the title sheet.

4. "End of slab" shall be used as the reference line for layout of integral abutments. Any stations and elevations required shall be referenced to this line.

5. Label the skew of abutment in relation to the end of the slab and the skew of the piles in relation to the centerline of integral abutment.

6. The minimum width of integral abutment shall be 2'-6". If this width is not sufficient, a 3'-0" width may be used.

7. All ST series and SV series bars shall be aligned parallel to the beam/girder centerline. The maximum spacing of these bars shall be 12". ST0602 bars between the backwall and the approach slab (where applicable) are not required outside of the exterior beam / girder.

8. Dowels shall be a minimum of $^7/_8$" ø and shall be spaced at a maximum of 12" center-to-center along the centerline of integral abutment. Locate first dowel 6" beyond the edge of bottom flange and dimension from the centerline of beam/girder. Dowels shall be embedded 12" into footing.

9. The approach slab seat (7") shall be provided on all integral abutments regardless of whether or not the bridge will have an approach slab.

10. Show elevation at bottom of beam/girder along centerline of integral abutment. Show elevation at bottom of footing.

11. For details of when to slope the abutment footing or to detail the abutment footing level, see File No. 17.01-16.

12. The wing shall project a minimum of 12" below the top of footing. For alternate wingwall details, see File No. 17.04-40.

13. AF04 bars shall be aligned parallel to the beam/girder centerline. The maximum spacing of these bars shall be 12".

14. The footing shall be designed with a minimum height of 3'-0" and a maximum height of 4'-0".

15. A 4" clearance between the end of the beam/girder and the end of slab shall be provided. The flanges may be clipped to provide this clearance. In the case of a minimum width abutment and a skew approaching the maximum of 30° the entire end of the beam/girder may need to be clipped to provide this clearance and to allow the anchor bolts to be located on the centerline of the integral abutment.

16 A series of $1^1/_2$" ø holes shall be provided for the SH series bars to pass through. These holes shall be located a minimum of 3" and a maximum of 6" from the bottom flange and shall be spaced at a maximum spacing of 12". The top hole through the web shall be located at a sufficient distance from the top flange to fit within the stirrup bar enclosing the area. See File Nos. 17.03-21 thru -24.

17 A distance of 9" minimum to 2'-0" maximum shall be provided between bottom of flange and top of footing.

18 The fill in front of the integral abutment shall be set at a minimum 9" distance below the top of footing with the edge of berm set at a minimum 3'-0" distance from the face of abutment.

19 Temporary support bolts shall be a minimum $^7/_8$" diameter and shall be embedded a minimum of 1'-0" into footing.

20 Plate A shall be a minimum of $^1/_2$" thick and 5" wide.

21 The minimum width of plate B is 3" and the minimum length is 5". The plate shall be $^1/_2$" thick in all cases.

22 Approach slabs shall be modified to provide a 10" wide seat.

23 Show North Arrow above plan view.

24 Show Notes as required. For instructions on completing the notes, see File Nos. 04.03-1 and -2.

25 For determining the thickness of EPS material, see File No. 17.03-30.

26 For instructions on completing the title block, see File No. 03.03.

27 For instructions on completing the project block, see File No. 04.01.

28 For instructions on developing the CADD sheet number, see File Nos. 01.01-6 and 01.14-4.

29 For instructions on completing the block for sealing, signing and dating this sheet, see File Nos. 01.16-1 thru -6.

30 Provide the appropriate geotechnical design data in tabular format if not combined with pier data and provided near front of the plan assembly. For additional information, see File No. 17.02-3. The plan set for these sample sheets combined the design data near the front of the plan assembly (i.e., not shown on these sample sheets). See sample pier sheets and accompanying notes in File Nos. 15.03-1 thru -6 for examples of data tables on sheets.

31 Where architectural treatment(s) is used, provide limits of architectural texture, coping widths, texture grid scales, relief, treatment position and other necessary details as applicable. See Chapter 5 of this manual for requirements, details and information for architectural treatment.

STATE	FEDERAL AID ROUTE	FEDERAL AID PROJECT	STATE ROUTE	STATE PROJECT	SHEET NO.
VA.	—		321	0321-007-111, B645	9

(26)

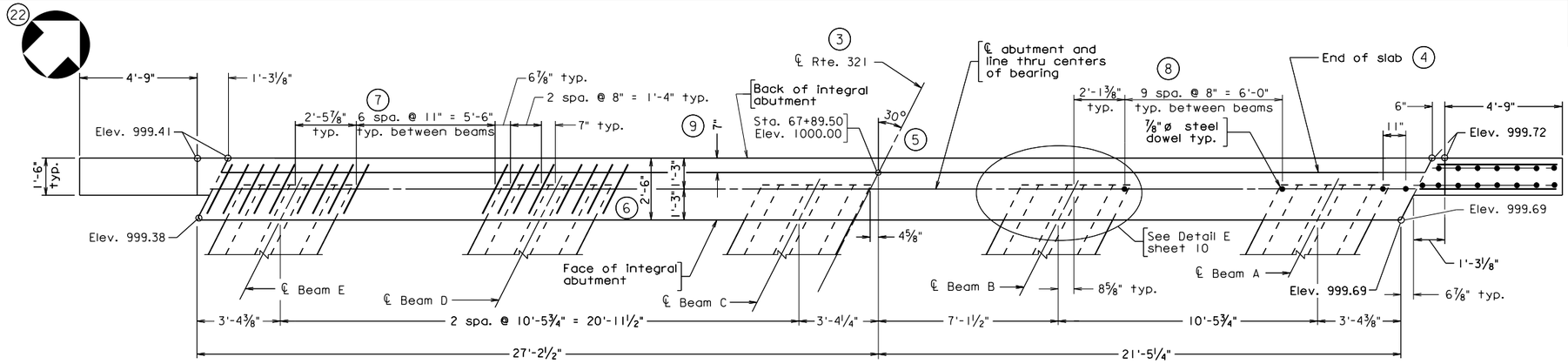

PLAN (1)

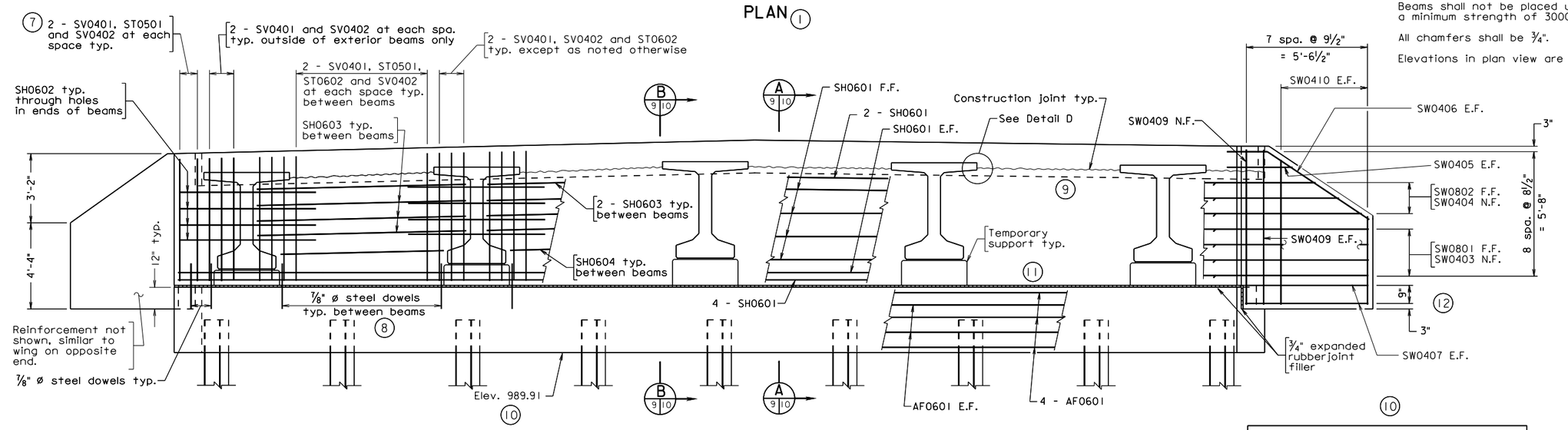

ELEVATION (1)

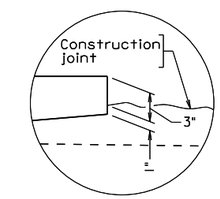

DETAIL D
Not to scale

Notes: (24)

Portion of the integral abutment above the hinge shall be placed and cured to a minimum compressive strength of 3000 psi prior to the placement of the deck concrete.

Backfill behind integral abutment footing shall not be placed until concrete in the upper portion of the integral abutment attains a minimum compressive strength of 3000 psi. The remainder of the backfill behind both bridge abutments shall be placed such that the differential in the height of fill at each abutment shall not exceed 6".

The integral backwall shall be cast when the least thermal movement of the superstructure can be expected during the period of initial set of the concrete in the backwall: for instance 1) at dusk or 2) during an expected uniformly cloudy day.

Tolerance for driving piles shall be as specified for "Column supports for bent caps" in Section 403, Table IV-1 of the Specifications.

See prestressed beam sheet for details of holes through the web and location of BC bars.

Beams shall not be placed until temporary support concrete gains a minimum strength of 3000 psi.

All chamfers shall be ¾".

Elevations in plan view are at top of slab.

(10)

TABLE OF BOTTOM OF BEAM ELEVATIONS				
Beam A	Beam B	Beam C	Beam D	Beam E
994.41	994.54	994.59	994.35	994.11

For location of Point of Elevation on bottom of beams, see Section B, sheet 10.

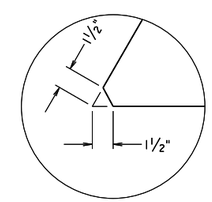

DETAIL C
Typical at acute angles
Not to scale

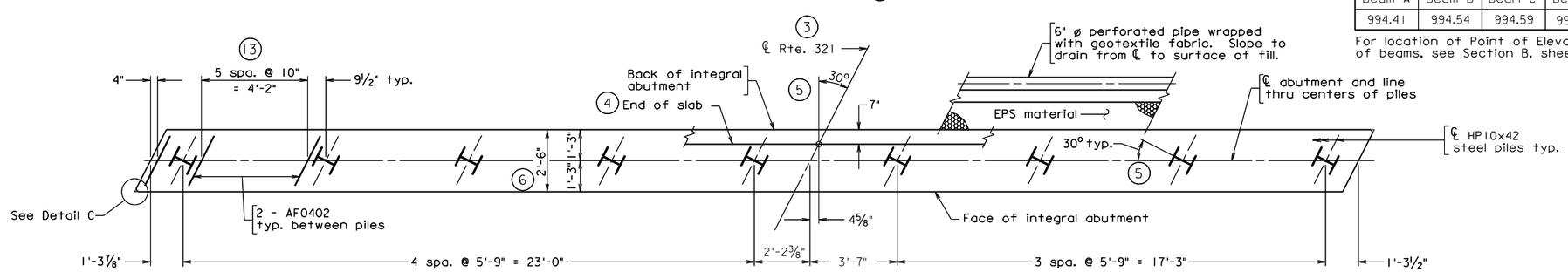

PILE AND FOOTING REINFORCEMENT PLAN
AF0601 bars are not shown for clarity.

(27)

999-92_009.dgn

(28)

VDOT S&B DIVISION
RICHMOND, VA
STRUCTURAL ENGINEER

ABUTMENTS
FULL INTEGRAL ABUTMENT SAMPLE PLANS
ABUTMENT DETAILS SHEET - PRESTR. CONCRETE BEAMS

(1)

Scale: ⅜" = 1'-0" unless otherwise noted

©2016, Commonwealth of Virginia

No.	Description	Date
	Revisions	

COMMONWEALTH OF VIRGINIA
DEPARTMENT OF TRANSPORTATION

STRUCTURE AND BRIDGE DIVISION

(25)

ABUTMENT A

Designed: ABC
Drawn: DEF
Checked: GHI

Date: May 2016

Plan: 999-

PART 2
DATE: 18May2016
SHEET 7 of 10
FILE NO. 17.05-7

STATE	FEDERAL AID ROUTE	FEDERAL AID PROJECT	STATE ROUTE	STATE PROJECT	SHEET NO.
VA.	—		321	0321-007-111, B645	10

(26)

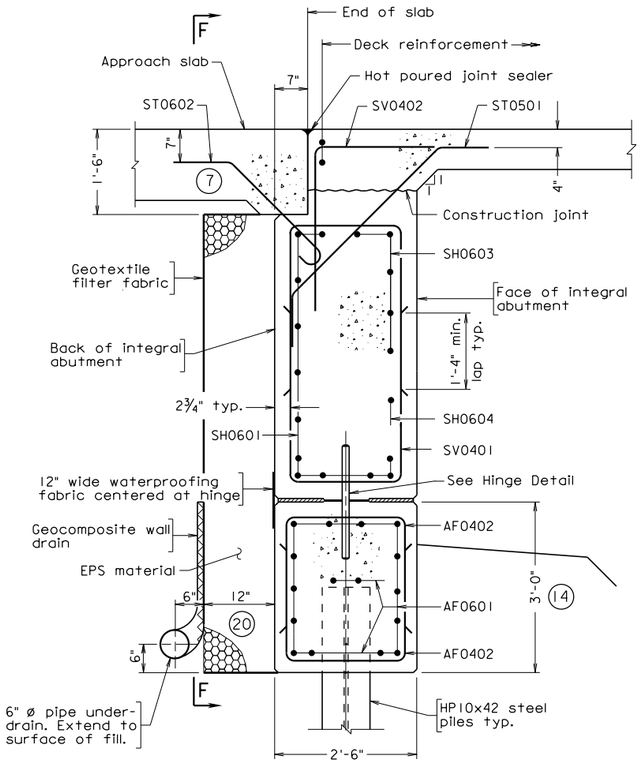

SECTION A (9|10) (2)

Between girders

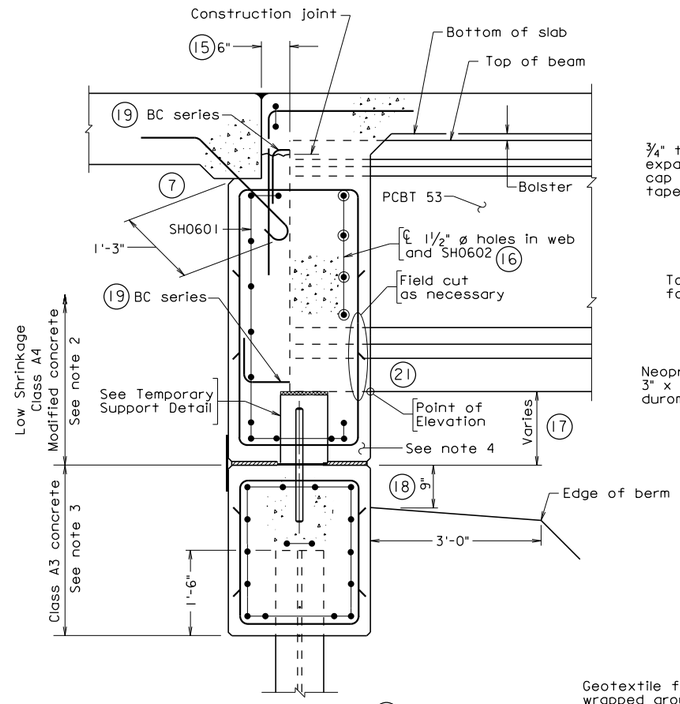

SECTION B (9|10) (2)

At beams
For details not shown, see Section A-A

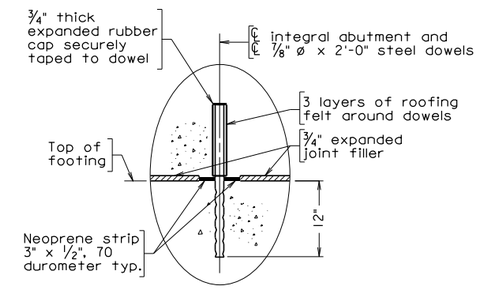

HINGE DETAIL

Not to scale

Notes: (24)

1. All chamfers shall be ¾".
2. Low Shrinkage Class A4 Modified concrete and Corrosion Resistant Reinforcing (CRR) steel, same Class as deck, are included with superstructure quantities.
3. Class A3 concrete and CRR steel, Class I, are included with sub-structure quantities.
4. Extreme care must be taken, when placing concrete, to eliminate any voids under beam flanges.
5. Cost of dowels, anchor bolts, plates, washers and temporary supports shall be included in the bid price for prestressed concrete beams. Cost of neoprene and roofing felt are to be included in other bid items.

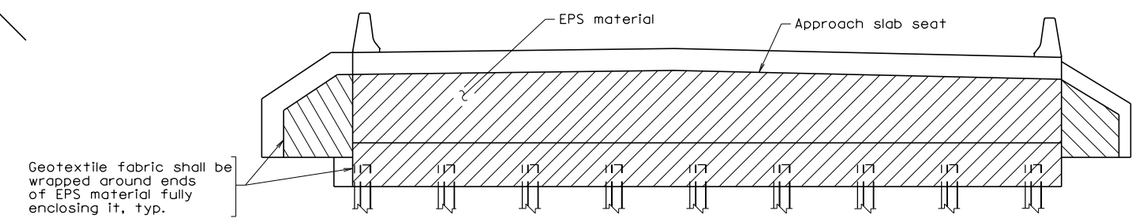

VIEW F-F

Not to scale

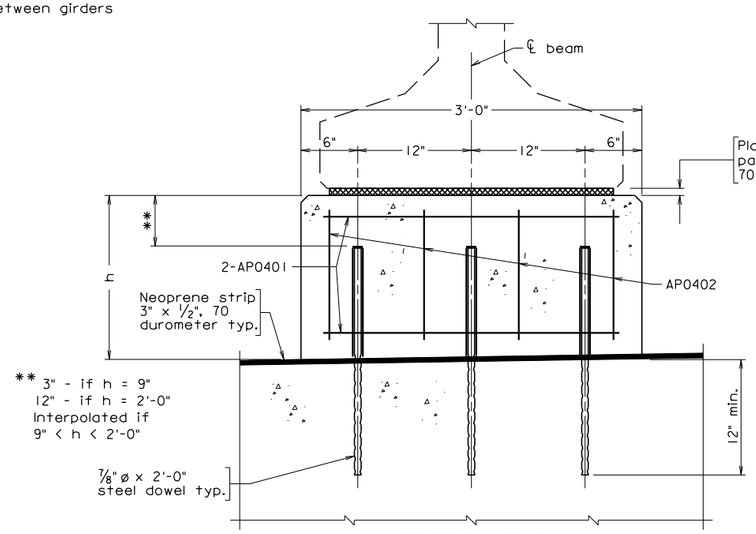

SECTION C-C

Scale: 1½" = 1'-0"

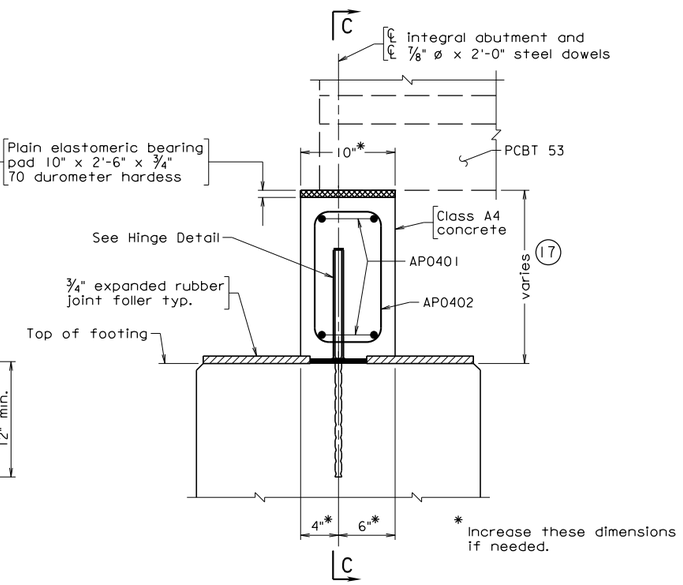

* Increase these dimensions if needed.

TEMPORARY SUPPORT DETAIL

(Stay In-place)

Scale: 1½" = 1'-0"

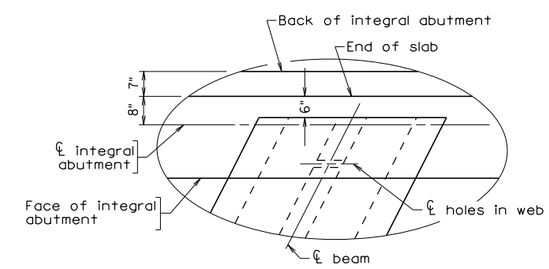

DETAIL E

Not to scale

ABUTMENTS
FULL INTEGRAL ABUTMENT SAMPLE PLANS
ABUTMENT DETAILS SHEET - PRESTR. CONCRETE BEAMS

(2)

Scale: ¾" = 1'-0" except as noted

©2016, Commonwealth of Virginia

(27) (28)

999-92_010.dgn

VDOT S&B DIVISION
RICHMOND, VA
STRUCTURAL ENGINEER

No.	Description	Date

Revisions

COMMONWEALTH OF VIRGINIA
DEPARTMENT OF TRANSPORTATION

STRUCTURE AND BRIDGE DIVISION

(25) ABUTMENT A
SECTIONS AND DETAILS

Designed: ABC
Drawn: DEF
Checked: GHI

Date: May 2016

Plan: 999-

PART 2
DATE: 18May2016
SHEET 8 of 10
FILE NO. 17.05-8

CHECK LIST FOR SAMPLE PLANS – PRESTRESSED CONCRETE BEAMS

1. Show full PLAN and ELEVATION views along with a PILE AND FOOTING REINFORCEMENT PLAN for a full integral abutment complete with dimensions at scale of $^{3}/_{8}$" = 1'-0". Regardless of skew, the elevation view should be projected down from the plan view.

2. Show SECTION (typical) view through abutment complete with dimensions at a scale of $^{1}/_{2}$" = 1'-0" unless scale is insufficient to show adequate details.

3. Label the location centerline/baseline as shown on the title sheet.

4. "End of slab" shall be used as the reference line for layout of integral abutments. Any stations and elevations required shall be referenced to this line.

5. Label the skew of abutment in relation to the end of the slab and the skew of the piles in relation to the centerline of integral abutment.

6. The minimum width of integral abutment shall be 2'-6". If this width is not sufficient, a 3'-0" width may be used.

7. All ST series and SV series bars shall be aligned parallel to the beam/girder centerline. The maximum spacing of these bars shall be 12". ST0602 bars between the backwall and the approach slab (where applicable) are not required outside of the exterior beam / girder.

8. Dowels shall be a minimum of $^{7}/_{8}$" ø and shall be spaced at a maximum of 12" center-to-center along the centerline of integral abutment. Locate first dowel 6" beyond the edge of bottom flange and dimension from the centerline of beam/girder. Dowels shall be embedded 12" into footing.

9. The approach slab seat (7") shall be provided on all integral abutments regardless of whether or not the bridge will have an approach slab.

10. Show elevation at bottom of beam/girder along face of integral abutment. Show elevation at bottom of footing.

11. For details of when to slope the abutment footing or to detail the abutment footing level, see File No. 17.01-16.

12. The wing shall project a minimum of 12" below the top of footing. For alternate wingwall details, see File No. 17.04-40.

13. AF04 bars shall be aligned parallel to the beam/girder centerline. The maximum spacing of these bars shall be 12".

14. The footing shall be designed with a minimum height of 3'-0" and a maximum height of 4'-0".

15. A 6" clearance between the end of the beam/girder and the end of slab shall be provided. This distance is to be shown on the prestressed beam standard.

16 Modify the prestressed beam standard to show the location of $1^1/_2$" ø holes in beam web. The four holes shown are for a PCBT-53. Increase (or decrease) the number of holes by one for every beam depth increment above (or below) the 53" deep section shown. The additional holes shall be placed in 8" increments below the bottom hole shown. Depending on slab thickness, bolster thickness and strand pattern, the designer may need to adjust the hole locations so that adequate cover below the approach slab seat is maintained. Holes must lie within the web.

17 A distance of 9" minimum to 2'-0" maximum shall be provided between bottom of flange and top of footing.

18 The fill in front of the integral abutment shall be set at a minimum 9" distance below the top of footing with the edge of berm set at a minimum 3'-0" distance from the face of abutment.

19 Top BC0501 shall extend 3" beyond end of beam. Bottom BC0501 and BC0602 shall extend 10".

20 For determining the thickness of EPS material, see File No. 17.03-30.

21 The insert plate shall be eliminated from the prestressed beam standard.

22 Show North Arrow above plan view.

23 Approach slabs shall be modified to provide a 10" wide seat.

24 Show Notes as required. For instructions on completing the notes, see File Nos. 04.03-1 and -2.

25 For instructions on completing the title block, see File No. 03.03.

26 For instructions on completing the project block, see File No. 04.01.

27 For instructions on developing the CADD sheet number, see File Nos. 01.01-6 and 01.14-4.

28 For instructions on completing the block for sealing, signing and dating this sheet, see File Nos. 01.16-1 thru -6.

29 Provide the appropriate geotechnical design data in tabular format if not combined with pier data and provided near front of the plan assembly. For additional information, see File No. 17.02-3. The plan set for these sample sheets combined the design data near the front of the plan assembly (i.e., not shown on these sample sheets). See sample pier sheets and accompanying notes in File Nos. 15.03-1 thru -6 for examples of data tables on sheets.

30 Where architectural treatment(s) is used, provide limits of architectural texture, coping widths, texture grid scales, relief, treatment position and other necessary details as applicable. See Chapter 5 of this manual for requirements, details and information for architectural treatment.

GENERAL INFORMATION:

This section of the chapter establishes the practices and requirements necessary for the design and detailing of semi-integral abutments. For general requirements and guidelines on the use of semi-integral abutments, see File Nos. 17.01-2, -3 and -7 thru -16.

The details shown in this section are intended only to provide the designer with the necessary detailing practices and requirements for the detailing of semi-integral abutments. Additional practices and requirements necessary for the design and detailing of semi-integral abutments can be found in Section 17.03 of this chapter.

Sample design calculations are provided based on the AASHTO LRFD specifications to assist the designer in the design of the backwall and associated structural components.

The sample design calculations contained herein are based on the 4th Edition of the *AASHTO LRFD Bridge Design Specifications* including Interims and VDOT Modifications (IIM-S&B-80.2). The designer is responsible for ensuring his design is in accordance with the current edition of the *AASHTO LRFD Bridge Design Specifications* including Interims and VDOT Modifications (current IIM-S&B-80).

Sample plan sheets for semi-integral abutments including a check list are provided to show the necessary details required for a complete bridge plan assembly. See File Nos. 17.07-1 thru -12.

Preferred practice on semi-integral abutment layout falls in the following order:

1. Wingwalls oriented transversely to traffic (elephant ears) with the terminal wall on the superstructure. See File Nos. 17.07-3 thru -6.

2. Wingwalls oriented parallel to traffic (U-back wings) with the terminal wall on the superstructure. Offset the inside face of wall 3 feet from the face of rail/parapet to allow for dynamic deflection of the attached guardrail. See File Nos. 17.07-7 thru -10.

It is generally desirable to eliminate potential conflicts between superstructure and substructure components. As such, the second layout preference should only be used where Right-of-Way (R/W), maintenance of traffic (MOT) or design restrictions make the preferred layout not feasible.

SAMPLE DESIGN CALCULATIONS

The calculations provided do not correspond to the sample plans shown in File No. 17.07-3 thru -10.

TYPICAL TRANSVERSE SECTION AND SECTION THROUGH INTEGRAL ABUTMENT:

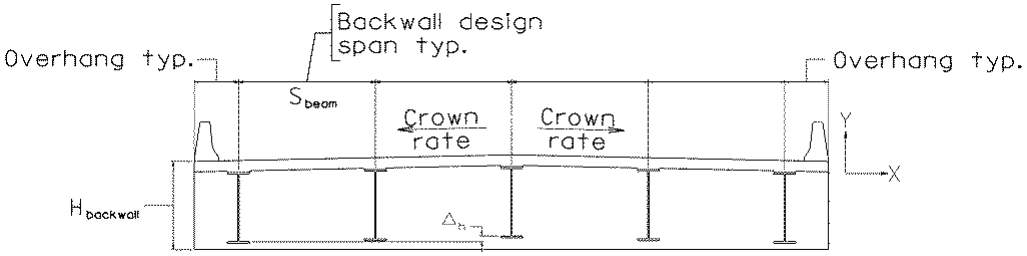

TRANSVERSE SECTION

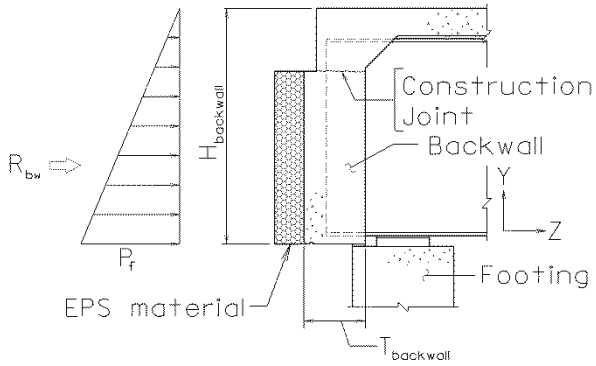

SECTION THROUGH INTEGRAL ABUTMENT

GIVEN AND ASSUMPTIONS:

γ_{soil} = 145 pcf	Unit weight of soil (select backfill material)
$K_p = 4$	Assumes the use of EPS material behind backwall
$K_o = 0.5$	Assumes soil type “granular dense” at wingwalls
W_{Bridge} = 43.33 ft	Bridge width
W_{clear} = 40 ft	Clear bridge width
L_{Bridge} = 250 ft	Bridge length

$L_{Thermal}$ = 125 ft	Length of thermal expansion
S_{Beam} = 9.33 ft	Beam/girder spacing
Overhang = 3.0 ft	Slab (and integral backwall) overhang
$H_{Backwall}$ = 6.33 ft	Backwall height
$T_{Backwall}$ = 1.58 ft	Thickness of backwall
T_{wing} = 1.5 ft	Thickness of wingwall
L_{wing} = 6 ft	Length of wingwall
H_{stem} = 3 ft	Depth of the stem above the footing
T_{deck} = 8.5 in	Thickness of the concrete deck slab
CS = 0.02	Crown rate (cross slope) of bridge deck
D_{AS} = 1.5 ft	Depth of approach slab seat
$T_{Bottomflange}$ = 1 in	Thickness of bottom flange of beam/girder
$T_{Bottomflange}$ = 12 in	Width of bottom flange of beam/girder
d_c = 3.5 in	Distance from the surface of concrete to center of reinforcing steel
f'_c = 4 ksi	Compressive strength of backwall concrete
f'_{cf} = 3 ksi	Compressive strength of footing concrete
F_y = 60 ksi	Yield strength of reinforcing steel
E_s =29000 ksi	Modulus of elasticity of steel
$E_c = 1820 \cdot \sqrt{f_c}$	Modulus of elasticity of concrete (backwall)
$E_{cf} = 1820 \cdot \sqrt{f_{cf}}$	Modulus of elasticity of concrete (footing)
γ_{RC} = 150 pcf	Unit weight of reinforced concrete
θ_A = 30 deg	Bridge skew angle
δ = 20 deg	Angle of wall friction
t_{min} = 0 deg	Minimum bridge exposure temperature
t_{max} = 120 deg	Maximum bridge exposure temperature

$\alpha = 6.5 \times 10^{-6} \left(\frac{1}{deg}\right)$ Coefficient of thermal expansion

$n_b = \frac{E_s}{E_c}$ Modular ratio of steel to concrete for the backwall and wingwall

$n_f = \frac{E_s}{E_c}$ Modular ratio of steel to concrete for the footing

$\gamma_e = 1.0$ Exposure factor for Class 1 exposure condition (AASHTO 5.7.3.4)

LRFD LOAD FACTORS: AASHTO LRFD Table 3.4.1 – 1 and -2

$\gamma_T = 1.2$ Load factor for temperature induced deformations

$\gamma_{EH} = 1.35$ Load factor for passive earth pressure for Strength Limit State

$\gamma_{EHs} = 1.0$ Load factor for passive pressure for Service Limit State

$\gamma_1 =$

DL	LL	TU	EH	
1.25	1.75	γ_{TU}	γ_{EH}	Strength I
1.25	1.35	γ_{TU}	γ_{EH}	Strength II
1.0	1.0	γ_{TU}	γ_{EHs}	Service I
1.0	1.3	γ_{TU}	γ_{EHs}	Service II

Note: If the bridge under consideration does not have an approach slab, load case "LS" should be included in the analysis.

$\eta_D = 1.0$ Load modifier (ductility) AASHTO LRFD 1.3.3

$\eta_R = 1.00$ Load modifier (redundancy) AASHTO LRFD 1.3.4

$\eta_I = 1.00$ Load modifier (importance) AASHTO LRFD 1.3.5

$\eta = \eta_D \times \eta_R \times \eta_I$ Overall load modifier AASHTO LRFD 1.3.2.1-1

$\eta = 1$ Per current VDOT IIM-S&B-80, all load modifiers shall be = 1.0 for all Limit States

LRFD REDUCTION FACTORS:

AASHTO LRFD 5.5.4.2.1

$\Phi_b = 0.90$ For bending in reinforced concrete at the Strength Limit State

$\Phi_v = 0.90$ For shear and torsion in reinforced concrete at the Strength Limit State

AASHTO LRFD 6.5.4.2

$\Phi_r = 1.0$ For structural steel in flexure

$\Phi_{vs} = 1.0$ For shear in structural steel

$\Phi_{ss} = 0.85$ For shear studs

LOAD DEFINITIONS:

P_{bw} Passive earth pressure at base of backwall

R_{bw} Resultant passive earth pressure acting along the backwall

The backwall, overhang, and wingwalls are designed for bending about the y-axis with the following assumptions:

- backwall acts as a continuous beam supported by the girders
- wingwall act as a single cantilevered beam supported by the wing haunch

BACKWALL DESIGN:

Earth pressure:

$\Delta h = 2 \times CS\ (S_{Beam}) = 2 \times 0.02\ (9.33) = 0.4$ ft — Change in height of backwall

$P_{bw} = \gamma_{soil} \times K_p\ (H_{Backwall} + \Delta h)\ P_{bw}$
$= 0.145 \times 4\ (6.33+0.4) = 3.9$ ksf — Passive earth pressure at bottom of the backwall

Determine backwall moments and shears for typical design span:

$R_{bw} = \left(\frac{1}{2}\right)(P_{bw})(H_{Backwall} + \Delta h)$ — Resultant passive earth pressure acting along the backwall

$= \left(\frac{1}{2}\right)(3.9)(6.33 + 0.4)$

$R_{bw} = 13.1 \frac{k}{ft}$

For simplicity, use the equations in AISC Table 3-23.42 (assuming 4 equal spans) to determine moments, shears and reactions.

$L_{GS} = \frac{S_{Beam}}{\cos(\theta_A)} = \frac{9.33}{\cos(30)} = 10.8$ ft — Girder spacing along skew

$M_{pos} = 0.0772 \times R_{bw}\ (L_{GS})^2$ — Maximum positive moment
$= 0.0772 \times 13.1\ (10.8)^2 = 117.3$ ft-k

$M_{neg} = 0.107 \times R_{bw} (L_{GS})^2$ — Maximum negative moment

$= 0.107 \times 13.1 (10.8)^2 = 162.5$ ft-k

$V_{max} = 0.607 \times R_{bw} (L_{GS})$ — Maximum shear

$= 0.607 \times 13.1 (10.8) = 85.6$ k

$R_{max} = 1.14 \times R_{bw} (L_{GS})$ — Maximum reaction at beam/girder

$= 1.14 \times 13.1 (10.8) = 160.7$ k

Determine overhang moments and shears:

$$M_{OH} = 0.5 \times R_{bw}\left(\frac{\text{Overhang}}{\cos(\theta_A)}\right)^2$$ — Moment due to overhang

$$= 0.5 \times 13.1\left(\frac{3.0}{\cos(30)}\right)^2 = 78.5 \text{ ft-k}$$

$$V_{OH} = R_{bw}\left(\frac{\text{Overhang}}{\cos(\theta_A)}\right)$$ — Shear due to overhang

$$= 13.1\left(\frac{3.0}{\cos(30)}\right) = 45.3 \text{ k}$$

$M_{max} = \max(M_{neg}, M_{OH}, M_{pos})$ $\quad M_{max} = 162.5$ ft-k

$V_{max} = \max(V_{max}, V_{OH})$ $\quad V_{max} = 85.6$ k

Design for flexure:

$M_u = \gamma_{EH} \times \eta \times M_{max} = 1.35 \times 1 \times 162.5 = 219.4$ ft-k — Factored strength moment for integral backwall

Note: Typically, the initial analysis would start with the standard reinforcing of #6 bars @ 12" spacing. For simplicity, this analysis starts with a reinforcement level that will work for strength.

Try, # 8 bars at @ 12" spacing

$A_s = 6 \times 0.79 = 4.74 \text{ in}^2$ — Amount of reinforcement in outermost layer of reinforcing steel

$d = T_{Backwall} - d_c = 1.58 \times 12 - 3.5 = 15.5$ in — Depth to centroid of outermost layer of reinforcing steel

$T = F_y \times A_s = 60 \times 4.74 = 284.4$ k — Total tension force in reinforcing steel

$$a = \frac{T}{(0.85 \times f'_c \times H_{Backwall})}$$ — Depth of compression block

$$= \frac{284.4}{(0.85 \times 4 \times (6.33 \times 12)} = 1.1 \text{ in}$$

$M_n = T\left(d - \frac{a}{2}\right) = 284.4\left(15.5 - \frac{1.1}{2}\right) = 353.4$ ft-k — Resistance moment Strength Limit State

$M_r = \Phi_b \times M_n = 318$ ft-k

$M_u = 219.4$ ft-k — Factored strength moment for integral backwall

$M_r > M_u$ Therefore strength adequate

Check minimum reinforcement requirement: — AASHTO LRFD 5.7.3.3.2

$f_r = 0.37\sqrt{f'_c} = 0.37\sqrt{4} = 0.7$ ksi Modulus of rupture — AASHTO LRFD 5.4.2.6

$I_g = \left(\frac{1}{12}\right)(H_{Backwall})(T_{Backwall})^3$ — Gross moment of inertia

$= \left(\frac{1}{12}\right)(6.33 \times 12)(1.58 \times 12)^3 = 43{,}143.8 \text{ in}^4$

$y_{Bw} = \frac{T_{Backwall}}{2} = \frac{1.58 \times 12}{2} = 9.5$ in

$M_{crBW} = \frac{f_r \times I_g}{y_{Bw}} = \frac{0.7 \times 43{,}143.8}{9.5} = 280.6$ ft-k — Min reinforcement is based on the requirement that $\Phi_b \times M_n$ is greater than the lesser of $1.2 \times M_{crBW}$ and $1.33 \times M_u$

$\Phi_b \times M_n = 0.9 \times 353.4 = 318$ ft-k — Nominal resistance

$1.33 \times M_u = 1.33 \times 219.4 = 291.9$ ft-k — Factored design load

$1.2 \times M_{crBW} = 1.2 \times 280.6 = 336.8$ ft-k — Cracking Moment

$\Phi_b \times M_n > \min(1.33 \times M_u, 1.2 \times M_{crBW})$, Therefore, requirement met

Check crack control: — AASHTO LRFD 5.7.3.4

$s \le 700\frac{\gamma_e}{\beta_s f_s} - 2 \times d_c$ — AASHTO LRFD 5.7.3.4-1

$$\beta_s = 1 + \frac{d_c}{0.7(h - d_c)} = 1 + \frac{3.5}{0.7(1.58x12 - 3.5)} = 1.323$$

$$\rho = \frac{A_s}{(L_{wing})d} = \frac{4.74}{6x12x15.5} = 0.0042$$

$$K = \sqrt{(\rho n)^2 + 2\rho n} - \rho n = \sqrt{(0.0042x8)^2 + 2x0.0042x8} - 0.0042x8 = 0.228$$

$$j = 1 - \frac{K}{3} = 1 - \frac{0.228}{3} = 0.924$$

$M_s = \gamma_{EH} \times \eta \times M_{max} = 1.0 \times 1 \times 162.5 = 162.5$ ft-k Factored service moment for integral backwall

$$f_s = \frac{M_s}{A_s jd} = \frac{162.5x12}{4.74x0.924x15.5} = 28.72\,\text{ksi} < 0.6xF_y = 0.6x60 = 36\,\text{ksi}$$ Therefore, use f_s = 28.72 ksi

$$s \le 700\frac{\gamma_e}{\beta_s f_s} - 2\times d_c = 700\frac{1.0}{1.323x28.72} - 2x3.5 = 11.4\text{ in.}$$

Therefore, modify the reinforcement to 7 #8 @ 11 in spacing.

Note: In detailing the section, the designer should also check AASHTO 5.10.3 – Spacing of Reinforcement and AASHTO 5.10.8 – Shrinkage and Temperature Reinforcement.

Design for shear:

Note: Begin analysis with minimum reinforcing as shown in Chapter 20 details

$V_u = \gamma_{EH} \times \eta \times V_{max} = 1.35 \times 1.0 \times 85.6 = 115.5$ k Factored shear from passive earth pressure

Use general procedure for determination of shear resistance. This example conservatively assumes that the minimum amount of shear reinforcement is not provided, AASHTO LRFD 5.8.2.5. If minimum amount shear reinforcement is provided check AASHTO LRFD 5.8.3.4.2 for modifications to the following procedure.

$s_x = d = 15.5$ in

$a_g = 1.5$ in Maximum aggregate size AASHTO LRFD 5.8.3.4.2

$$s_{xe} = s_x \frac{1.38}{a_g + 0.63}$$ Crack spacing parameter AASHTO LRFD 5.8.3.4.2-5

$$= 15.5\ \frac{1.38}{1.5 + 0.63} = 10\text{ in}$$

$$\varepsilon_x = \frac{\left(\frac{M_u}{d} + V_u\right)}{E_s \times A_s}$$ Longitudinal strain AASHTO LRFD 5.8.3.4.2-4

$$= \frac{\left(\frac{219.4}{15.5/12} + 115.5\right)}{29{,}000 \times (7x0.79)} = 1.8\text{ E-003}$$

$\beta = \frac{4.8}{(1 \times 750 \times \varepsilon_x)} \times \frac{51}{s_{xe} + 39}$ AASHTO LRFD 5.8.3.4.2-2

$= \frac{4.8}{(1 \times 750 \times 1.8E-003)} \times \frac{51}{10 + 39} = 2.1$

$\theta_v = (29 + 3500 \times \varepsilon_x)$ AASHTO LRFD 5.8.3.4.2-3

$= (29 + 3500 \times 1.8E\text{-}3) = 35.3$ deg

$V_c = 0.0316 \times \beta \sqrt{(f'_c)} \; d \times H_{Backwall}$ AASHTO LRFD 5.8.3.3-3

$= 0.0316 \times 2.1 \sqrt{4} \times 15.5 \times (6.33 \times 12) = 156.3$ k

$V_p = 0$ (No prestressing force)

$V_u > 0.5 \times \Phi_v \times (V_c + V_p) = 0.5 \times 0.9 \times (156.3 + 0) = 70.3$ k AASHTO LRFD 5.8.2.4-1

$0.5 \times \Phi_v \times (V_c + V_p) < V_u$, therefore, shear reinforcement required.

Check capacity with standard shear reinforcement (#4 stirrups spaced at 12")

$A_v = 0.4$ in^2 $s_v = 12$ in

$V_s = \frac{A_v \times F_y \times d \times \cot(\theta_v)}{s_v}$ AASHTO LRFD 5.8.3.3-4

$= \frac{0.4 \times 60 \times 15.5 \times \cot(35.3)}{12} = 43.8$ k

$V_c + V_s + V_p = 156.3 + 43.8 + 0 = 200.1$ kips AASHTO LRFD 5.8.3.3-1

$b_v = T_{backwall} = 1.58$ ft

$d_v = \frac{M_n}{A_s f_y} = \frac{353.4 \times 12}{5.53 \times 60} = 12.78$ in.

$0.25 f'_c b_v d_v + V_p = 0.25 \times 4 \times (1.58 \times 12) \times 12.78 + 0 = 242.3$ kips AASHTO LRFD 5.8.3.3-2

V_n = min. of AASHTO LRFD 5.8.3.3-1 and 5.8.3.3-2 = 200.1 kips

$V_r = \Phi_v \times V_n = 0.9 \times 200.1 = 180.1$ Factored nominal resistance

$V_u = 115$ k Factored design load

$V_r > V_u$ Therefore design adequate

Shear reinforcement: #4 stirrup spaced @ 12"

Design shear studs at end of girders:

d = 0.875 in Diameter of shear stud

$A_{sc} = \frac{\pi}{4} \times d^2$ $\quad A_{sc} = 0.6 \text{ in}^2$ — Cross-sectional area of a single stud

$F_u = 60$ ksi — Specified minimum tensile strength

$Q_n = \min(0.5 \times A_{sc}\sqrt{f'_c x E_c} \le A_{sc} \times F_u)$
$= \min(0.5 \times 0.6\sqrt{4 \times 3{,}640}, 0.6 \times 60)$
$= \min(36.2 \text{ kips}, 36.1 \text{ kips})$

Nominal shear resistance of a single stud, AASHTO LRFD 6.10.10.4.3

$Q_n = 36.1$ k

$R_u = \gamma_{EH} \times \eta \times R_{max}$
$= 1.35 \times 1.0 \times 160.7 = 217$ k

Factored reaction due to the passive earth pressure on the backwall

$n_{studs} = \frac{R_u}{(\phi_{ss} \times Q_n)} = \frac{217}{(0.85 \times 36.1)} = 7.1$ — Total number of shear studs required

$n_{studs} = \text{Round}(n_{studs}, 2)$ $\quad n_{studs} = 8$ — Round total number of shear studs required

$n_{perside} = \frac{n_{studs}}{2} = \frac{8}{2} = 4$ — Number of shear studs per side of web

Determine reaction at acute corner and wing buttress due to skew effect:

See lateral force derivation in File No. 17.06-23 thru -25.

$$R_p = \frac{[R_{bw}\ (W_{Bridge}) \times \tan(\theta_A)]}{\left[1 + \left(\frac{W_{Bridge}}{L_{Bridge}}\right) \times \tan(\theta_A)\right]}$$

Buttress force required to resist rotation of superstructure

$$R_p = \frac{[13.1(43.33) \times \tan(30)]}{\left[1 + \left(\frac{43.33}{250}\right) \times \tan(30)\right]} = 296.3 \text{ k}$$

WING HAUNCH DESIGN:

Design assumption and approach:

- Haunch is assumed to act as a cantilever beam with bi-axial bending and torsion.
- Wing haunch is designed for self weight of wingwall (R_{ww}), passive earth pressure along the wingwall (R_s) and lateral load due to the skew of the bridge (R_p)
- Loads are broken into components in the global coordinate system and are designed for independently, through single axis bending. The total amount of steel required for the haunch is the summation of the steel required from each component analysis.
- Begin analysis with the minimum reinforcement as shown in this Chapter.

To calculate the centroid of the wing haunch:

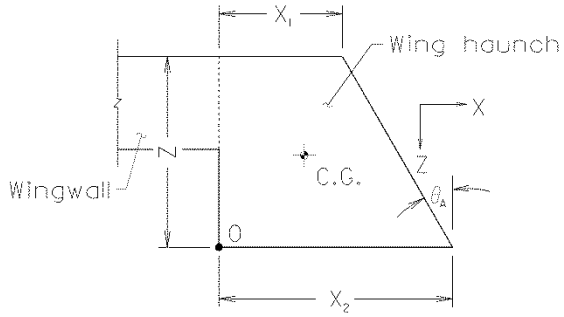

PLAN VIEW OF WING HAUNCH

Geometry of the wing haunch

$Z = 3\text{ ft} + 1\text{ in}$	Depth of the haunch section
$X_1 = 2\text{ ft}$	Top dimension of wing haunch
$X_2 = 3\text{ ft} + 9.375\text{ in}$	Bottom dimension of the wing haunch
$X_3 = X_2 - X_1 = 3.8 - 2.0 = 1.8\text{ ft}$	

Rectangular section

$A_r = X_1 \times Z = 2 \times 3.0833 = 6.2\text{ ft}^2$	Area of the rectangular section
$X_{or} = \frac{1}{2} \times X_1 = \frac{1}{2} \times 2 = 1\text{ ft}$	Horizontal distance from point O of the rectangular section to the center of gravity of the section
$Z_{or} = \frac{1}{2} \times Z = \frac{1}{2} \times 3.08333 = 1.5\text{ ft}$	Vertical distance from point O of the rectangular section to the center of gravity of the section

Dimensions for the triangular section

$A_t = \frac{1}{2} X_3 \times Z = \frac{1}{2} 1.8 \times 3.0833 = 2.7\text{ ft}^2$	Area of the triangular section
$X_{ot} = X_1 + \frac{1}{3} \times X_3 = 2 + \frac{1}{3} \times 1.8 = 2.6\text{ ft}$	Horizontal distance from point O of the triangular section to the center of gravity of the section
$Z_{ot} = \frac{1}{3} \times Z = \frac{1}{3} \times 3.0833 = 1\text{ ft}$	Vertical distance from point O of the triangular section to the center of gravity of the section

$$x_c = \frac{A_r \times X_{or} + A_t \times X_{ot}}{A_r + A_t}$$ Centroid along X axis

$$= \frac{6.2 \times 1 + 2.7 \times 2.6}{6.2 + 2.7} = 1.5 \text{ ft}$$

$$z_c = \frac{A_r \times Z_{or} + A_t \times Z_{ot}}{A_r + A_t}$$ Centroid along Z axis

$$= \frac{6.2 \times 1.5 + 2.7 \times 1}{6.2 + 2.7} = 1.4 \text{ ft}$$

Moment about Y axis (Torsional Moment):

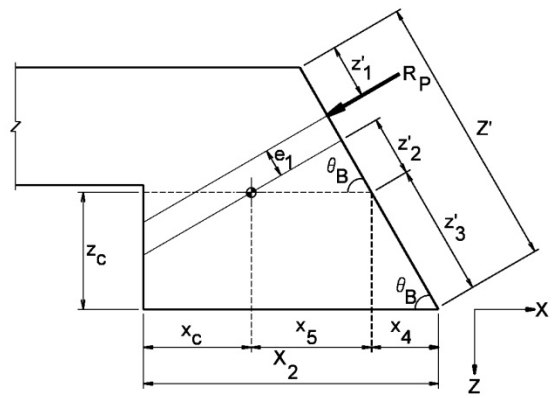

WING HAUNCH LOADING DETAIL

$\theta_B = 90 - \theta_A$ $\theta_B = 60$ deg

$z'_1 = 8.375$ in $= 0.70$ ft — Centerline of the rub plates along the skewed face of the haunch measured from back of haunch

$$Z' = \frac{Z}{\sin(\theta_B)} = \frac{3.0833}{\sin(60)} = 3.6 \text{ ft}$$ Depth of wing haunch along the skew

$$z'_3 = \frac{z_c}{\sin(\theta_B)} = \frac{1.4}{\sin(60)} = 1.6 \text{ ft}$$ Depth of centroid along skew

$x_4 = z'_3 \times \cos(\theta_B) = 1.6 \times \cos(60) = 0.8$ ft

$x_5 = x_2 - x_c - x_4 = 3.78 - 1.5 - 0.8 = 1.5$ ft

$z'_2 = x_5 \times \cos(\theta_B) = 1.5 \times \cos(60) = 0.7$ ft

$e_1 = Z' - z'_1 - z'_2 - z'_3$ — Eccentricity of the Rp load along x-z plane
$= 3.6 - 0.7 - 0.7 - 1.6 = 0.5$ ft

$M_{ys} = R_p \times e_1 = 296.3 \times 0.5 = 153.9$ ft-k — Unfactored moment about y-axis

$M_{uy} = \gamma_{EH} \times \eta \times M_{ys}$
$= 1.35 \times 1 \times 153.9 = 207.7$ ft-k

Factored torsional moment along X-Z plane

Moment about X axis:

$R_{pz} = R_p \times \sin(\theta_A) = 296.3 \times \sin(30) = 148.2$ k — Component of R_p along Z axis

$M_{xs} = R_{pz} \times \frac{H_{Backwall}}{2} = 148.2 \times \frac{6.33}{2} = 468.9$ ft-k — Unfactored moment about X axis

$M_{ux} = \gamma_{EH} \times \eta \times M_{xs} = 1.35 \times 1 \times 468.9 = 633.1$ ft-k — Factored moment about X axis

Moment about Z axis:

$R_{px} = R_p \times \cos(\theta_A) = 296.3 \times \cos(30) = 256.6$ k — Component of R_p along X axis

$M_{zs} = R_{px} \times \frac{H_{Backwall}}{2} = 256.6 \times \frac{6.33}{2} = 812.2$ ft-k — Unfactored moment about Z axis

$M_{uz} = \gamma_{EH} \times \eta \times M_{zs} = 1.35 \times 1 \times 812.2 = 1096.5$ ft-k — Factored moment about Z axis

Single Axis Bending Design:

Assumptions

- Centroid of the steel and concrete compression block lie on the same line which is perpendicular to the neutral axis.
- All reinforcement specified in the A_s required is assumed to reach yield prior to failure.

X-Axis Bending:

$d = Z - d_c = 33.5$ in
$= 37 - 3.5 = 33.5$ in

Iterate "a" to converge moment resistance with moment demand. "a" is utilized instead of "A_s" due to varying width of "b"

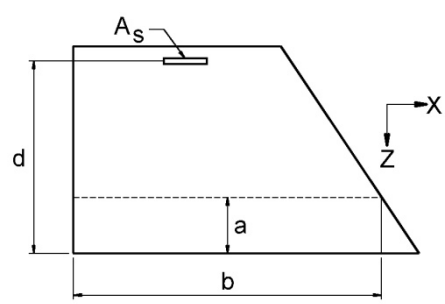

a = 1.8 in

$b = X_2 - (X_2 - X_1)\left(\frac{a}{Z}\right) = 44.3$ in

$= 45.375 - (45.375 - 24)\left(\frac{1.8}{3.0833}\right) = 44.3$ in

$C = 0.85 \times f'_c\ (a \times b)$ Concrete force
$= 0.85 \times 4\ (1.8 \times 44.3) = 271.3$ k

$\Phi \times M_{nx} = \Phi_b \times C \left(d - \frac{a}{2}\right) = 663.4$ k-ft Moment resistance

$= 0.90 \times 271.3 \left(33.5/12 - \frac{1.8/12}{2}\right) = 663.4$ k-ft

$M_{ux} = 633.1$ ft-k Moment demand

$\Phi \times M_{nx} > M_{ux}$ Therefore strength adequate

$A_{sx} = \frac{C}{F_y} = 4.5\ in^2$ Area of steel required for x-axis bending

Provide 5 - # 9 bars, Also refer Wing Haunch Reinforcement Detail

Z-Axis Bending:

$d = X_2 - \left(\frac{X_2 - X_1}{2} + d_c\right) = 31.2$ in

$= 45.375 - \left(\frac{45.375 - 24}{2} + 3.5\right) = 31.2$ in

Iterate "a" to converge moment resistance with moment demand

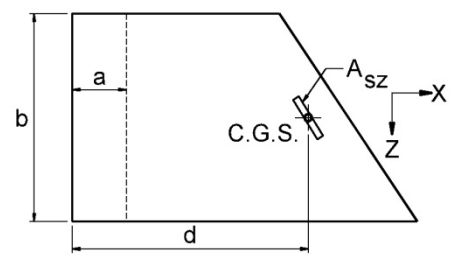

a = 4 in

b = Z = 37 in

$C = 0.85 \times f'_c\ (a \times b)$ Concrete force
$= 0.85 \times 4\ (4 \times 37) = 503.2$ k

$\Phi \times M_{nz} = \Phi_b \times C \left(d - \frac{a}{2}\right)$ Moment resistance

$= 0.90 \times 503.2 \left(31.2/12 - \frac{4/12}{2}\right) = 1101.5$ k-ft

$M_{uz} = 1096.5$ k-ft

$\Phi \times M_{nz} > M_{uz}$, Therefore strength adeqate

$A_{sz} = \frac{C}{F_y} = \frac{503.2}{60} = 8.4\ in^2$ Area of steel required for z-axis bending

Provide 9 - # 9 bars. Also refer to Wing Haunch Reinforcement Detail

Check minimum reinforcement requirement:

$f_r = 0.37\sqrt{f'_c} = 0.37\sqrt{4} = 0.7$ ksi

Modulus of rupture
AASHTO LRFD 5.7.3.3.2

About X-Axis:

$$I_{xg} = \frac{1}{12}\left(X_1 + \frac{\frac{Z}{2}}{\tan(\theta_B)}\right) Z^3$$

Gross moment of inertia
AASHTO LRFD 5.4.2.6

$$= \frac{1}{12}\left(24 + \frac{\frac{37}{2}}{\tan(60)}\right)(37)^3 = 146{,}391 \text{ in}^4$$

$$y_{Bwx} = \frac{Z}{2} = \frac{37}{2} = 18.5 \text{ in}$$

$$M_{crWhx} = \frac{f_r \times I_{xg}}{y_{Bwx}} = \frac{0.7 \times 146{,}391.3}{18.5} \times \frac{1}{12} = 488 \text{ k-ft}$$

Minimum reinforcement is based on the requirement that $\Phi_b \times M_n$ is greater than the lesser of $1.2 \times M_{crWh}$ and $1.33 \times M_u$

$\Phi \times M_{nx} = 663.4$ k-ft

Nominal moment

$1.33\ (M_{ux}) = 842.4$ k-ft

Factored design load

$1.2 \times M_{crWhx} = 585.6$ k-ft

Cracking moment

$\Phi \times M_{nx} > \min(1.33 \times Mu,\ 1.2 \times M_{crWhx})$ Therefore, requirement met

About Z-Axis:

$$I_{zg} = \frac{Z}{12}\left(X_1 + \frac{\frac{Z}{2}}{\tan(\theta_B)}\right)^3$$

Gross moment of inertia
AASHTO LRFD 5.4.2.6

$$= \frac{37}{12}\left(24 + \frac{\frac{37}{2}}{\tan(60)}\right)^3 = 128{,}616 \text{ in}^4$$

$$y_{Bwz} = \frac{\left(X_1 + \frac{\frac{Z}{2}}{\tan(\theta_B)}\right)}{2}$$

$$= \frac{\left(24 + \frac{\frac{37}{2}}{\tan(60)}\right)}{2} = 17.3 \text{ in}$$

$$M_{crWhz} = \frac{f_r \text{ x } I_{zg}}{y_{Bwz}} = \frac{0.7 \times 128{,}615.9}{17.3} \times \frac{1}{12} = 457.4 \text{ k-ft}$$

Minimum reinforcement is based on the requirement that Φ_b x M_n is greater than the lesser of 1.2 x M_{crWh} and 1.33 x M_u

Φ x M_{nz} = 1101.5 k-ft — Nominal moment

1.33 x (M_{uz}) = 1458.3 k-ft — Factored design load

1.2 x M_{crWhx} = 548.9 k-ft — Cracking moment

Φ x M_{nz} > min(1.33 x M_u, 1.2 x M_{crWhz}) Therefore, requirement met

Note: The designer should also check AASHTO LRFD 5.7.3.4 – Crack Control, AASHTO 5.10.3 – Spacing of Reinforcement and AASHTO 5.10.8 – Shrinkage and Temperature Reinforcement.

Design for shear:

$V_u = \gamma_{EH} \times \eta$ x (R_p) = 1.35×1.0 x (296.3) V_u = 400 k

$s_x = X_1 - d_c$ = (24 – 3.5)/12 = 1.7 ft — AASHTO LRFD 5.8.3.4.2

a_g = 1.5 in — Maximum aggregate size

$$s_{xe} = s_x \frac{1.38}{a_g + 0.63}$$

AASHTO LRFD 5.8.3.4.2-5
Crack spacing parameter

$$= 1.7\text{x}12 \frac{1.38}{1.5 + 0.63} = 13.3 \text{ in}$$

$$\varepsilon_x = \frac{\left[\frac{M_u}{(X_1 - d_c)} + V_u\right]}{E_s \text{ x } A_s}$$

AASHTO LRFD 5.8.3.4.2-4
Longitudinal strain

$$= \frac{\left[\frac{1096.5}{(1.7)} + 400\right]}{29{,}000 \times 9} = 3.84\text{E-}003$$

$$\beta = \frac{4.8}{(1+750 \times \varepsilon_x)} \times \frac{51}{[s_{xe} + 39]}$$ AASHTO LRFD 5.8.3.4.2-2

$$= \frac{4.8}{(1+750 \times 0.00384)} \times \frac{51}{[13.3+39]} = 1.2$$

$\theta_v = (29 + 3500 \times \varepsilon_x)$ AASHTO LRFD 5.8.3.4.2-3

$\theta_v = (29 + 3500 \times 3.84E\text{-}003) = 42.4$ deg

$V_c = 0.0316 \times \beta\sqrt{(f'_c)}\ (X_1 - d_c) \times Z$ Shear resistance of concrete

$V_c = 0.0316 \times 1.2\sqrt{(4)}\ (24 - 3.5) \times 3.08333 \times 12 = 57.8$ k AASHTO LRFD 5.8.3.3-3

$V_u > 0.5 \times \Phi_v \times (V_c + V_p) = 0.5 \times 0.9 \times (57.8 + 0) = 26.0$ k AASHTO LRFD 5.8.2.4-1

$0.5 \times \Phi_v \times (V_c + V_p) < V_u$ Therefore shear reinforcement required.

Check capacity with shear reinforcement (#5 stirrups spaced @ 6")

$A_v = 4 \times 0.31 = 1.24\ in^2$ $S_v = 6$ in

$$V_s = \frac{A_v \times F_y \times d \times \cot(\theta_v)}{s_v} = 422.9 \text{ k}$$ AASHTO LRFD 5.8.3.3-4

$$= \frac{1.24 \times 60 \times 31.2 \times \cot(42.4)}{6} = 422.9 \text{ k}$$

$V_c + V_s + V_p = 57.8 + 422.9 + 0 = 480.7$ kips AASHTO LRFD 5.8.3.3-1

$b_v = X_2 = 3.7813$ ft

$$d_v = \frac{M_n}{A_s f_y} = \frac{812.2 \times 12}{9 \times 60} = 18.05 \text{ in}$$

$0.25 f'_c b_v d_v + V_p = 0.25 \times 4 \times (3.7813 \times 12) \times 18.05 + 0 = 819.0$ kips AASHTO LRFD 5.8.3.3-2

V_n = min. of AASHTO LRFD 5.8.3.3-1 and 5.8.3.3-2 = 480.7 kips

$V_r = \Phi_v \times V_n = 0.9 \times 480.7 = 432.6$ kips Factored nominal resistance

$V_u = 400$ k Factored design load

$V_r > V_u$ Therefore, design adequate

Shear reinforcement: # 5 stirrup spaced @ 6" overlap 2-2 legged stirrup. Also refer to Wing Haunch Reinforcement Detail.

Check Torsional reinforcement requirement:

$T_u = M_{uy}$ $T_u = 207.7$ k-ft

$A_o = (Z - 2 \times d_c)\left[\left(\frac{X_1 + X_2}{2}\right) - 2 \times d_c\right]$ Area enclosed by shear flow path

$A_o = (3.0833 - 2 \times 3.5/12)\left[\left(\frac{2 + 3.7813}{2}\right) - 2 \times 3.5/12\right] = 5.8\ ft^2$

$b_e = (3.0833 - 2 \times 3.5/12) = 2.5$ ft

$f_{pc} = 0$

$K = \sqrt{1 + \frac{f_{pc}}{0.0632\sqrt{f'_c}}} = \sqrt{1 + \frac{0}{0.0632\sqrt{4}}} = 1$ AASHTO LRFD 5.8.6.3-3

$T_{cr} = 0.0632 \times K\sqrt{f'_c} \times 2A_o b_e = 0.0632 \times 1\sqrt{4} \times 2 \times (5.8 \times 144) \times (2.5 \times 12) = 263.9$ k-ft

$^1/_3 \times \Phi_v \times T_{cr} = {}^1/_3 \times 0.9 \times 263.9 = 79.2$ k-ft $< T_u$ Therefore, torsional effects shall be investigated.

$T_n = \frac{2 \times A_o \times A_v \times F_y}{s_v} = \frac{2 \times 5.8 \times 1.24 \times 60}{6}$ AASHTO LRFD 5.8.6.4-2

$T_n = 1716.6$ ft-k

$\Phi_v \times T_n = 0.9 \times 1716.6 = 1545$ ft-k

$\Phi_v \times T_n > T_u$, Therefore, design adequate

If torsional reinforcement is required then the designer shall calculate the additional torsional reinforcement according to AASHTO equation 5.8.6.4-3

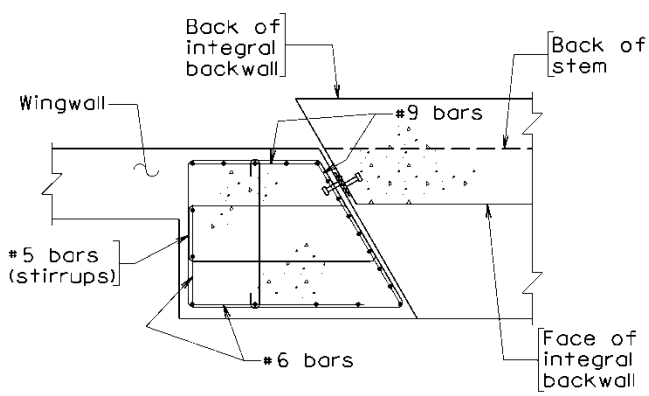

PLAN

DESIGN OF WINGWALL:

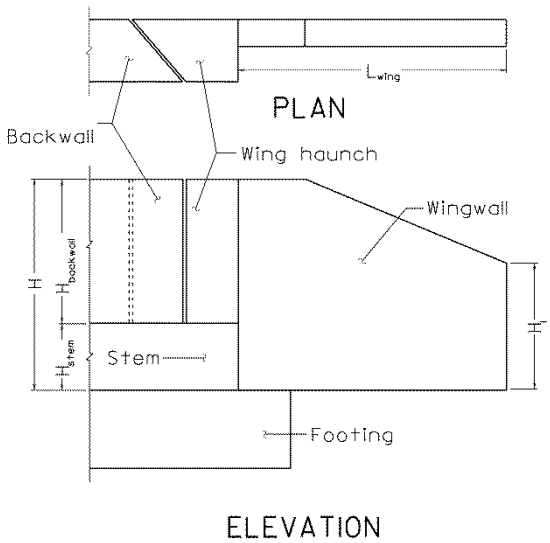

Wingwall Geometry:

$S_{slopeWW} = \frac{1}{1.5}$ — Slope of the wingwall

$L_w = L_{wing}$ $\quad L_w = 6$ ft — True length of wingwall

$H = H_{Backwall} + H_{stem} = 6.33 + 3 = 9.3$ ft — Upper height of wingwall

$H_1 = H - S_{slopeWW} \times (L_{wing}) = 9.3 - 1/1.5 \times (6) = 5.3$ ft — Lower height of wingwall

$H_2 = H - H_1 = 9.3 - 5.3 = 4$ ft

Earth Pressure:

$w_{ww} = \left(\frac{1}{2}\right)\gamma_{soil} \times K_o \left(H_1 + \frac{3}{4} \times H_2\right)^2$ — Passive earth pressure acting on wingwall

$= \left(\frac{1}{2}\right)145 \times 0.5 \left(5.3 + \frac{3}{4} \times 4\right)^2 = 2.5 \ \frac{k}{ft}$

$M_{Ohw} = 0.5 \times w_{ww} (L_{wing})^2 = 0.5 \times 2.5 (6)^2 = 45.3$ k-ft

$V_{Ohw} = w_{ww} \times L_{wing} = 2.5 \times 6 = 15.1$ k

Design for flexure:

Try 8 - # 5 bars at 12 in

$M_{uw} = \gamma_{EH} \times \eta \times M_{OHw} = 1.35 \times 1 \times 45.3 = 61.1$ k-ft — Factored moment for wingwall

$A_{sw} = 2.48$ in^2 — Amount of reinforcement in outermost layer of steel

$T_w = F_y \times A_{sw} = 60 \times 2.48 = 148.8$ k — Total tension force in steel

$d_w = T_{wing} - d_c = (1.58 \times 12) - 3.5 = 14.5$ in — Depth to centroid of outermost layer of steel

$$a_w = \frac{T_w}{(0.85 \times f'_c \times H_{Backwall})}$$ — Depth of compression block

$$= \frac{148.8}{(0.85 \times 4 \times (6.33 \times 12))} = 0.6 \text{ in}$$

$$M_{nw} = T_w \left(d_w - \frac{a_w}{2}\right) = 148.8 \left(14.5 - \frac{0.6}{2}\right) = 176.2 \text{ k-ft}$$

$\Phi_b \times M_{nw} = 158.6$ k-ft

$M_{uw} = 61.1$ k-ft

$\Phi_b \times M_{nw} > M_{uw}$ Therefore, strength adequate

Check minimum reinforcement requirement: — AASHTO LRFD 5.7.3.3.2

$f_r = 0.37\sqrt{f'_c} = 0.37\sqrt{4} = 0.7$ ksi — Modulus of rupture AASHTO LRFD 5.4.2.6

$$I_g = \left(\frac{1}{12}\right)(H_{Backwall})(T_{wing})^3$$ — Gross moment of inertia

$$I_g = \left(\frac{1}{12}\right)(6.33 \times 12_l)(1.5 \times 12)^3 = 36916.6 \text{ in}^4$$

$$y_{Bw} = \frac{T_{wing}}{2} = \frac{1.5 \times 12}{2} = 9 \text{ in}$$

$$M_{crWW} = \frac{f_r \times I_g}{y_{BW}} = \frac{0.7 \times 36916.6}{9} = 252.9 \text{ k-ft}$$ — Minimum reinforcement is based on the requirement that $\Phi_b \times M_n$ is greater than the lesser of $1.2 \times M_{crWW}$ and $1.33 \times M_u$

$\Phi_b \times M_{n.w} = 158.6$ k-ft — Nominal resistance

$1.33 \times M_{uw} = 81.3$ k-ft — Factored design load

$1.2 \times M_{crWW} = 303.5$ k-ft — Cracking moment

$\Phi_b \times M_n > \min(1.33 \times M_{uw}, 1.2 \times M_{crWW})$ Therefore, requirement met

Note: The designer should also check AASHTO LRFD 5.7.3.4 – Crack control, AASHTO 5.10.3 – Spacing of Reinforcement and AASHTO 5.10.8 – Shrinkage and Temperature Reinforcement.

Design for shear:

$V_u = \gamma_{EH} \times \eta \times V_{OHw} = 1.35 \times 1.0 \times 15.1 = 20.4$ k — Factored shear from passive earth pressure

$s_x = d_w = 14.5$ in — AASHTO LRFD 5.8.3.4.2

$a_g = 1.5$ in — Maximum aggregate size

$$s_{xe} = s_x \times \frac{1.38}{a_g + 0.63}$$

Crack spacing parameter
AASHTO LRFD 5.8.3.2-5

$$= 14.5 \times \frac{1.38}{1.5 + 0.63} = 9.39 \text{ in}$$

$$\varepsilon_x = \frac{\left(\frac{M_u}{d_w} + V_u\right)}{E_s \times A_s}$$

Longitudinal strain
AASHTO LRFD 5.8.3.4.2-4

$$\varepsilon_x = \frac{\left(\frac{61.1 \times 12}{14.5} + 20.4\right)}{29000 \times 2.48} = 1.25 \text{ E-03}$$

$$\beta = \frac{4.8}{(1 + 750 \times \varepsilon_x)} \times \frac{51}{[s_{xe} + 39]}$$

AASHTO LRFD 5.8.3.4.2-2

$$= \frac{4.8}{(1 + 750 \times 0.001)} \times \frac{51}{[9.39 + 39]} = 2.6$$

$$\theta_v = (29 + 3500 \times \varepsilon_x) = 33.4 \text{ deg}$$

AASHTO LRFD 5.8.3.4.2-3

$$= (29 + 3500 \times 1.25\text{E-}03) = 33.4 \text{ deg}$$

$V_c = 0.0316 \times \beta\sqrt{(f'_c)} \times d_w \times H_{Backwall}$

Shear resistance of concrete
AASHTO LRFD 5.8.3.3-3

$V_c = 0.0316 \times 2.6\sqrt{(4)} \times 14.5 \times (6.33 \times 12) = 390.2$ k

$V_u > 0.5 \times \Phi_v \times (V_c + V_p) = 0.5 \times 0.9 \times (392.2 + 0) = 176.5$ k — AASHTO LRFD 5.8.2.4-1

$0.5 \times \Phi_v \times (V_c + V_p) > V_u$ Therefore, shear reinforcement not required.
Provide standard reinforcement
(#4 stirrups spaced @ 12")

DESIGN RUB PLATES:

To determine the dimensions of the rub plate:

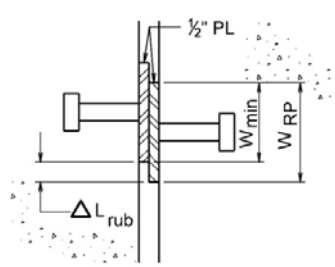

TYPICAL RUB PLATE DETAIL

$\Delta_{LRUB} = \gamma_T \times \alpha\ (t_{max} - t_{min})\ L_{Thermal}$
$= 1.2 \times 6.5E\text{-}06\ (120 - 0)(125 \times 12)$
$= 1.40$ in

$H_{bearing} = 3$ in

$h_{rp} = H_{Backwall} - 3in - 2in - H_{bearing} - T_{Bottomflange}$ Height of rub plates
$= (6.33 \times 12) - 3in - 2in - 3 - 1$
$= 67$ in

$F_g = 2$ ksi Maximum galling stress for ASTM A276 Type 316 steel, of which rub plates are constructed.

$f_g = \frac{F_g}{2} = 1$ ksi Assuming factor of safety of 2 for allowable galling stress

$w_{min} = \frac{\gamma_{EH} \times R_p}{(h_{rp} \times f_g)} = \frac{1.35 \times 280.6}{(67 \times 1)} = 5.65$ in

Ensure the minimum rub plate width is maintained during extremes of the temperature cycles.

$w_{RP} = w_{min} + \Delta_{LRUB} = 5.65 + 1.40 = 7.05$ in

Use 7 $^1/_4$ in x 67 in x 0.5 in rub plate

EXPANDED POLYSTRERENE (EPS) THICKNESS:

Evaluation of minimum thickness for the EPS layer behind the backwall.

$\Delta_L = \alpha\ (t_{max} - t_{min})\ L_{Thermal}$ Change in length due to temperature in one direction
$= 6.5E\text{-}06\ (120 - 0)\ (125 \times 12) = 1.2$ in

$EPS_t = 10\ (0.01 \times H_{Backwall} + 0.67 \times \Delta_L)$ Thickness of EPS layer required. See File No. 17.03-29
$= 10\ (0.01 \times (6.33 \times 12) + 0.67 \times 1.2)$

$EPS_t = 15.4$ in

$EPS_t = \text{ceil}\left(\frac{EPS_t}{1in}\right) \times 1$ in $EPS_t = 16$ in

LATERAL BUTTRESS FORCE DERIVATION:

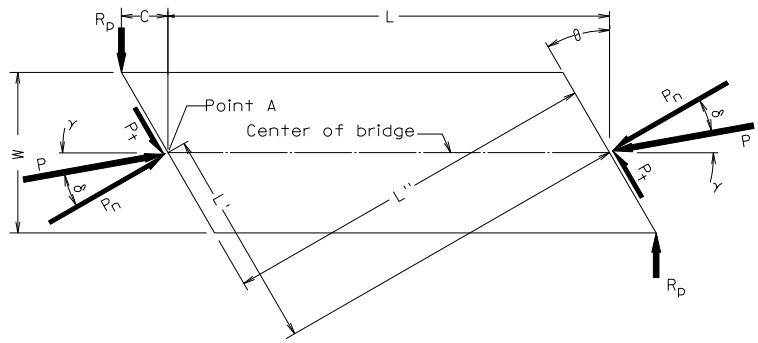

R_p	Buttress force required to resist rotation of superstructure (kips)
$P = \dfrac{qW}{\cos(\theta - \delta)}$	Full passive force across the width of the bridge (kips)
$P_n = P \cdot \cos\delta$	Component of "P" normal to the backwall (kips)
$P_t = P \cdot \sin\delta$	Component of "P" tangential to backwall (kips)
δ	Angle of Wall Friction
θ	Skew angle of bridge
α	$\theta - \delta$
$q = \dfrac{1}{2} \cdot \gamma_s \cdot K_p \cdot H^2$	Resultant of passive force at a point along the backwall. (kips/LF)
H	Height of integral backwall (ft)
K_p	Coefficient of passive earth pressure
γ_s	Unit weight of soil (pcf)
$C = \dfrac{W}{2} \cdot \tan\theta$	Moment arm for buttress force
$L' = L \cdot \sin\theta$	Moment arm for normal passive force
$L'' = L \cdot \cos\theta$	Moment arm for tangential passive force

$$\Sigma M_A = 0 = (P_n \cdot L') - (P_t \cdot L'') - R_p \cdot (L + C) - (R_p \cdot C)$$

$$0 = P_n \cdot L' - P_t \cdot L'' - R_p \cdot (L + 2C)$$

$$R_p \cdot (L + 2C) = P_n \cdot L' - P_t \cdot L''$$

$$R_p = \frac{P_n \cdot L' - P_t \cdot L''}{(L+2C)} \Rightarrow L' = L \cdot \sin\theta;\ L'' = L \cdot \cos\theta;\ C = \frac{W}{2} \cdot \tan\theta;\ P_t = P \cdot \sin\delta;$$

$$P_n = P \cdot \cos\delta$$

$$R_p = \frac{(P \cdot \cos\delta \cdot L \cdot \sin\theta) - (P \cdot \sin\delta \cdot L\cos\theta)}{L + 2(\frac{W}{2} \cdot \tan\theta)}$$

$$R_p = \frac{(P \cdot \cos\delta \cdot \sin\theta) - (P \cdot \sin\delta \cdot \cos\theta)}{1 + (\frac{W}{L} \cdot \tan\theta)} \Rightarrow P = \frac{qW}{\cos(\theta - \delta)}$$

$$R_p = \frac{q \cdot W}{\cos(\theta - \delta)} \cdot \frac{(\cos\delta \cdot \sin\theta) - (\sin\delta \cdot \cos\theta)}{1 + (\frac{W}{L} \cdot \tan\theta)} \Rightarrow (\cos\delta \cdot \sin\theta - \sin\delta \cdot \cos\theta) = \sin(\theta - \delta)$$

$$R_p = \frac{q \cdot W}{\cos(\theta - \delta)} \cdot \frac{\sin(\theta - \delta)}{1 + (\frac{W}{L} \cdot \tan\theta)}$$

$$\boxed{R_p = \frac{q \cdot W \cdot \tan(\theta - \delta)}{1 + (\frac{W}{L} \cdot \tan\theta)}}$$

For skew angles, $\theta \le \delta$, assume $\delta = \theta$, therefore $R_p = 0$.

$$R_p = \frac{q \cdot W \cdot \tan(\theta - \theta)}{1 + (\frac{W}{L} \cdot \tan\theta)} = \frac{q \cdot W \cdot \tan(0)}{1 + (\frac{W}{L} \cdot \tan\theta)} = 0$$

Field observations to date indicate superstructure rotation with skew angles as low as 5º. It appears that the shear force at the backwall/backfill interface is not always mobilized. Therefore, it is recommended that the interaction angle of friction, δ between the soil and backwall be set to zero. Therefore, it can be assumed that the P_t and P_n forces are not mobilized, but only P remains. Therefore, these modifications can be made to the following equation:

$$\Sigma M_A = 0 = (P_n \cdot L') - (P_t \cdot L'') - R_p \cdot (L + C) - (R_p \cdot C)$$

rendering it as so:

$$\Sigma M_A = 0 = (P \cdot L') - R_p \cdot (L + C) - (R_p \cdot C)$$

$$0 = P \cdot L' - R_p \cdot (L + 2C)$$

$$R_p \cdot (L + 2C) = P \cdot L'$$

$$R_p = \frac{P \cdot L'}{(L + 2C)} \quad \Rightarrow \quad L' = L \cdot \sin\theta\,; \;\; C = \frac{W}{2} \cdot \tan\theta$$

$$R_p = \frac{(P \cdot L \cdot \sin\theta)}{L + 2(\frac{W}{2} \cdot \tan\theta)}$$

$$R_p = \frac{(P \cdot \sin\theta)}{1 + (\frac{W}{L} \cdot \tan\theta)} \quad \Rightarrow \quad P = \frac{qW}{\cos\theta}$$

$$R_p = \frac{q \cdot W}{\cos\theta} \cdot \frac{\sin\theta}{1 + (\frac{W}{L} \cdot \tan\theta)}$$

$$\boxed{R_p = \frac{q \cdot W \cdot \tan\theta)}{\left[1 + (\frac{W}{L} \cdot \tan\theta)\right]}}$$

To ensure conservatism in the design, it is suggested that the above equation be used in all cases.

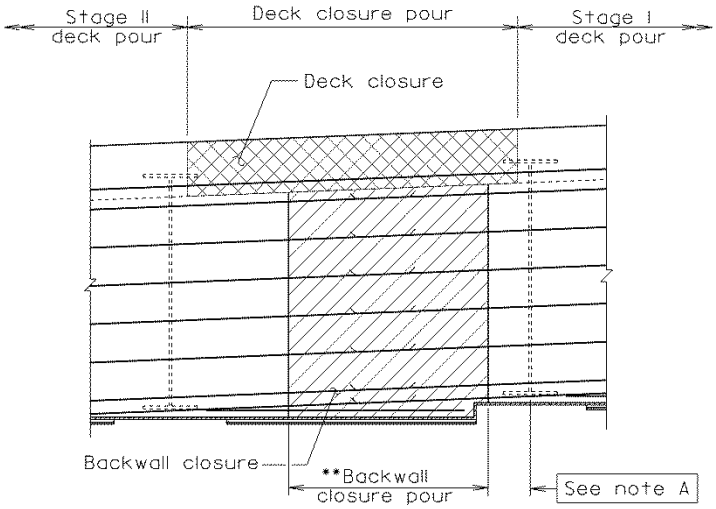

SEMI-INTEGRAL ABUTMENT – WITH DECK CLOSURE DETAIL

Items in blocks are for designer's information only and are not to be placed on the plans.

The location of the deck closure pour is subject to the staging sequence established by the designer. Deck closures should be used when noncomposite DL deflections > 2 ½ ". Backwall closures may be poured with the deck as long as the concrete in the backwall remains plastic throughout the pour by use of retarders, etc.

Note A: $\frac{b_f}{2} + 6''$ where b_f is the width of the widest flange.

** Min. distance equals lap length + 6".

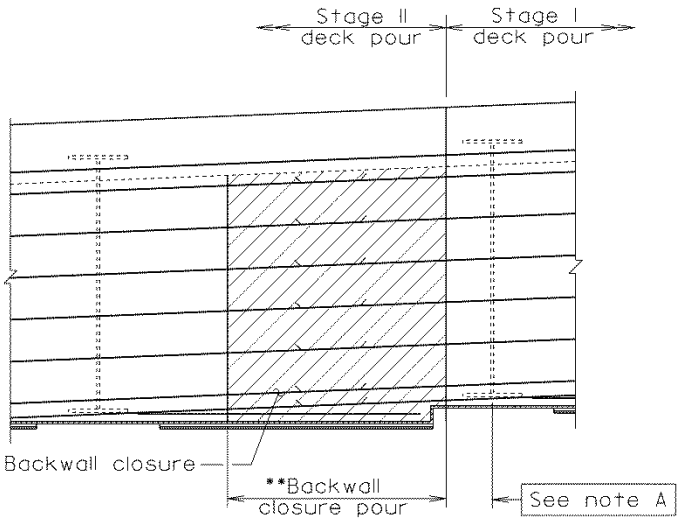

SEMI-INTEGRAL ABUTMENT - WITHOUT DECK CLOSURE DETAIL

Items in blocks are for designer's information only and are not to be placed on the plans.

Backwall closures may be poured with the deck as long as the concrete in the backwall remains plastic throughout the pour by use of retarders, etc.

Note A: $\frac{b_f}{2} + 6''$ where b_f is the width of the widest flange.

** Min. distance equals lap length + 6".

ABUTMENTS **SEMI-INTEGRAL ABUTMENTS** **STAGED CONSTRUCTION DETAILS**	VOL. V - PART 2 DATE: 06Feb2012 SHEET 27 of 28 FILE NO. 17.06-27

This sheet is intentionally left blank

GENERAL INFORMATION:

This section of the chapter establishes the general practices/requirements necessary for the completion of a plan detail sheets for a typical semi-integral abutment containing both steel beams/girders and prestressed concrete beams. Included are sample plan detail sheets necessary for providing a complete bridge plan assembly.

For location of the semi-integral abutment plan detail sheets in the bridge plan assembly, see File No. 01.02-4.

The practices for the completion of interior sheets and standard detail sheets contained in Chapter 4 shall be adhered to.

This sheet is intentionally left blank

STATE	FEDERAL AID ROUTE	FEDERAL AID PROJECT	STATE ROUTE	STATE PROJECT	SHEET NO.
VA.	—		667	0667-127-114, B609	3

(29)

Notes: (27)

(8) For extruded parapets, widen substructure by 1" (between wing haunches perpendicular to centerline) to allow for extra 1" width in deck and backwall. Any additional cost shall be at the Contractor's expense.

Cost of rub plates and joint filler shall be included in the price of substructure concrete.

(9) For details of semi-integral backwall, see sheets 8 and 9.

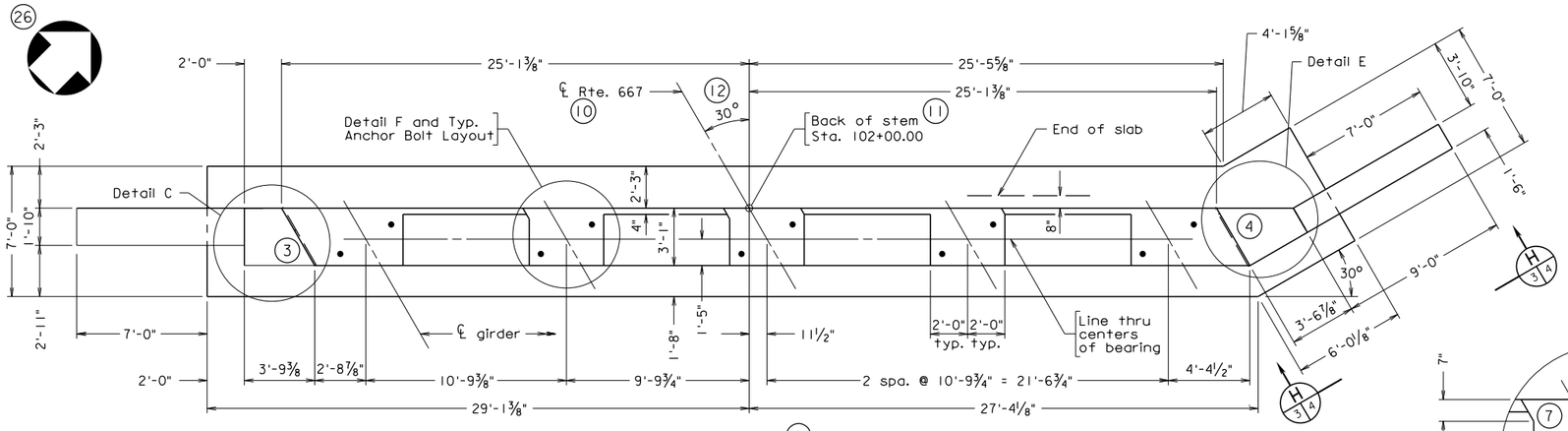

PLAN (1)

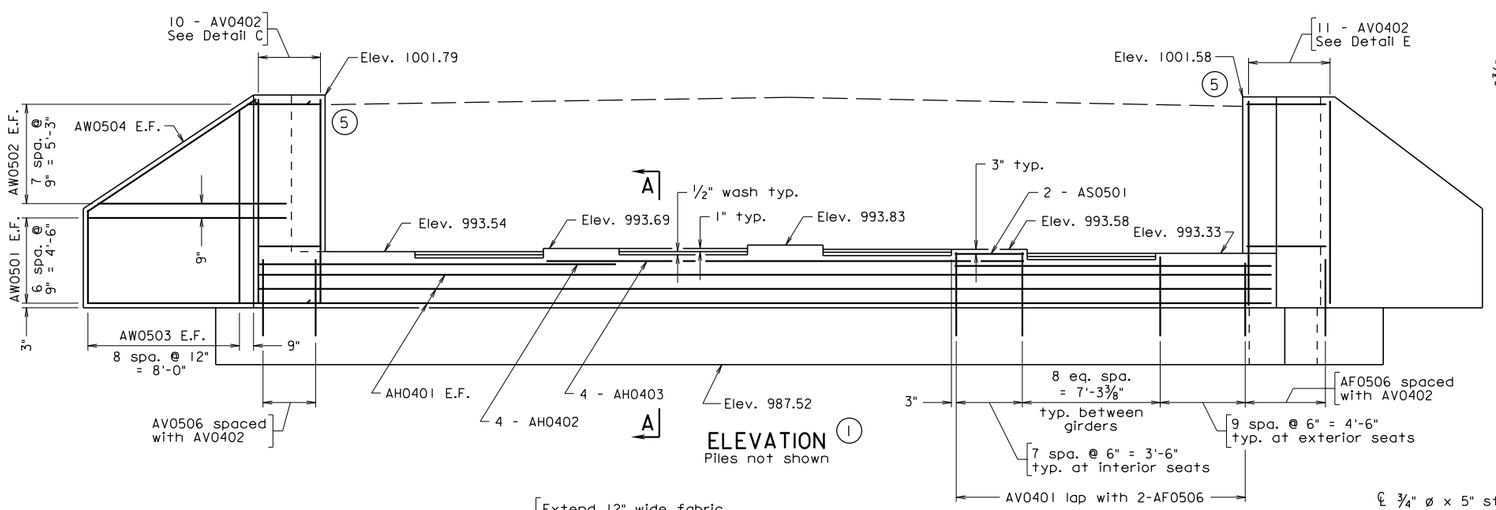

ELEVATION (1)
Piles not shown

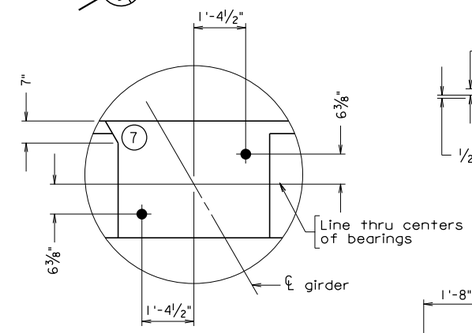

DETAIL F AND TYP. ANCHOR BOLT LAYOUT
Not to scale

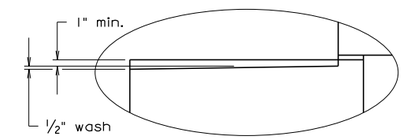

DETAIL G
Not to scale

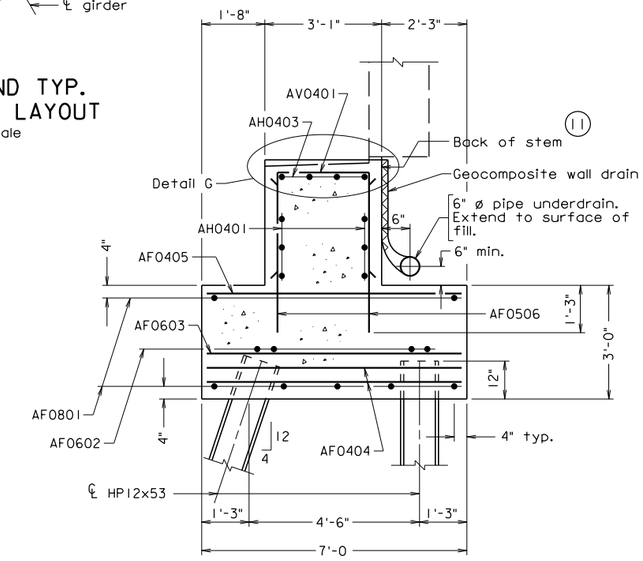

SECTION A-A (2)
Scale: ½" = 1'-0"

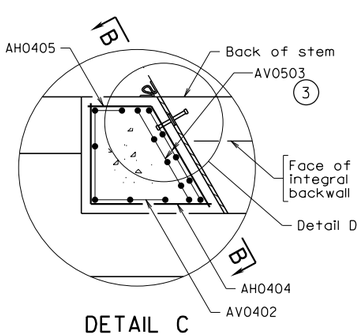

DETAIL C
Not to scale

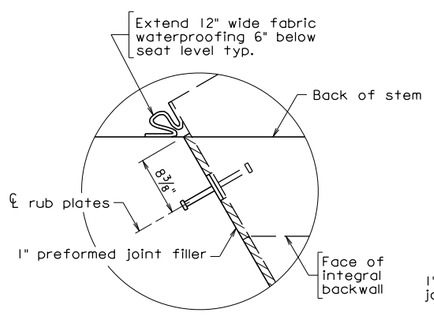

DETAIL D
Not to scale

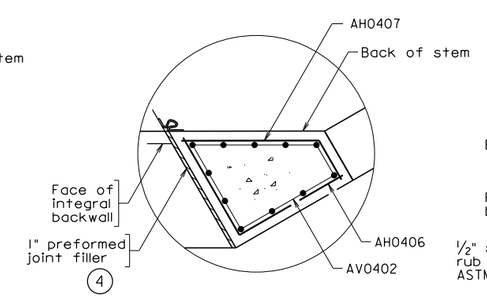

DETAIL E
Not to scale

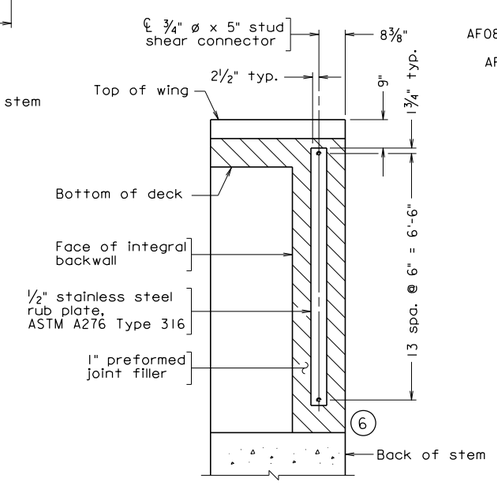

SECTION B-B
Scale: ½" = 1'-0"

(31)

VDOT S&B DIVISION
RICHMOND, VA
STRUCTURAL ENGINEER

ABUTMENTS
SEMI-INTEGRAL ABUTMENT SAMPLE PLANS
ABUTMENT DETAILS SHEET - STEEL BEAMS/GIRDERS

Scale: ⅜" = 1'-0" unless otherwise noted (1)

©2016, Commonwealth of Virginia

No.	Description	Date
	Revisions	

COMMONWEALTH OF VIRGINIA
DEPARTMENT OF TRANSPORTATION

STRUCTURE AND BRIDGE DIVISION

(28) ABUTMENT A
PLAN AND ELEVATION

Designed: ARC
Drawn: DEF
Checked: GH

Date: May 2016

Plan: 999-

PART 2
DATE: 18May2016
SHEET 3 of 12
FILE NO. 17.07-3

(30) 999-94.003.dgn

STATE	FEDERAL AID ROUTE	FEDERAL AID PROJECT	STATE ROUTE	STATE PROJECT	SHEET NO.
VA.	—		667	0667-127-114, B609	4

(29)

Note: (27)

For additional notes, see sheet 3.

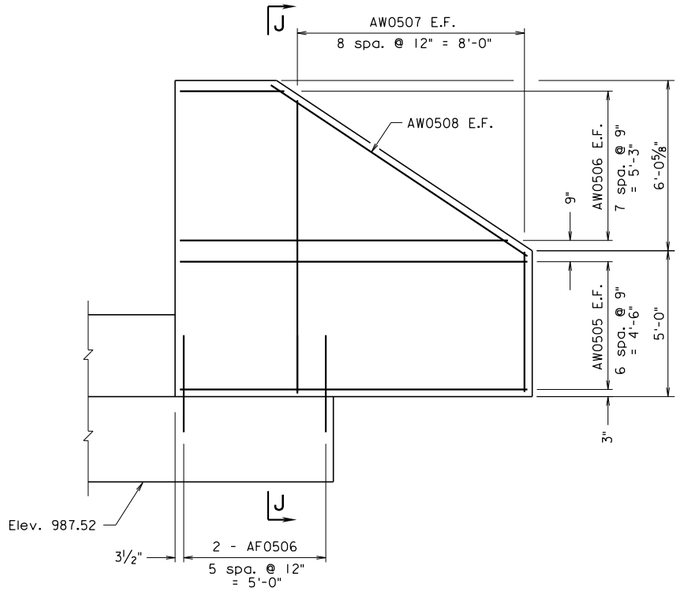

VIEW (H 3|4)

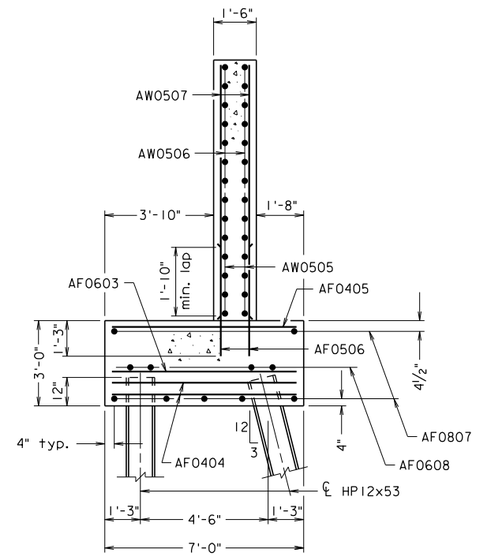

SECTION J-J

(26)

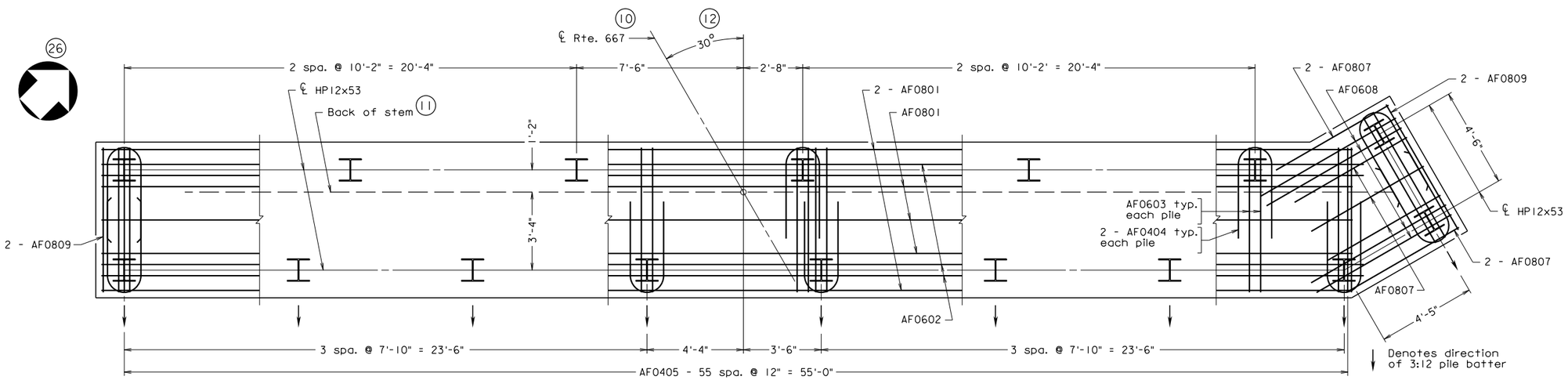

PILE AND FOOTING REINFORCEMENT PLAN (1)

999-94_004.dgn

(30)

(31)

VDOT S&B DIVISION
RICHMOND, VA
STRUCTURAL ENGINEER

ABUTMENTS
SEMI-INTEGRAL ABUTMENT SAMPLE PLANS
ABUTMENT DETAILS SHEET - STEEL BEAMS/GIRDERS

Scale: ⅜" = 1'-0" unless otherwise noted (1)

©2016, Commonwealth of Virginia

No.	Description	Date
	Revisions	

COMMONWEALTH OF VIRGINIA
DEPARTMENT OF TRANSPORTATION

STRUCTURE AND BRIDGE DIVISION

(28) ABUTMENT A
FOOTING PLAN AND
WINGWALL DETAILS

Designed: ABC
Drawn: DEF
Checked: GHI

Date: May 2016

Plan: 999-

PART 2
DATE: 18May2016
SHEET 4 of 12
FILE NO. 17.07-4

STATE	FEDERAL AID ROUTE	FEDERAL AID PROJECT	STATE ROUTE	STATE PROJECT	SHEET NO.
VA.	—		667	0667-127-114, B609	5

(29)

Notes: (27)

Integral backwall concrete shall be placed and cured to a minimum compressive strength of 3000 psi prior to placement of deck concrete.

Backfill operations above seat level shall not be started until deck has been placed and cured to a minimum compressive strength of 3000 psi. Backfill shall be placed such that the differential in fill height between both abutments does not exceed 6" after compaction.

For details of holes through the web and location of stud shear connectors, see sheet 20.

The integral backwalls shall be cast when the least thermal movement of the superstructure can be expected during the period of initial set of the concrete in the backwall, e.g. at dusk or during an expected uniformly cloudy day.

Forms for the backwall shall be attached to the girders only; the forms shall not be attached to or blocked against the abutment stem. The backwall and forms must be free to move in relation to the abutment.

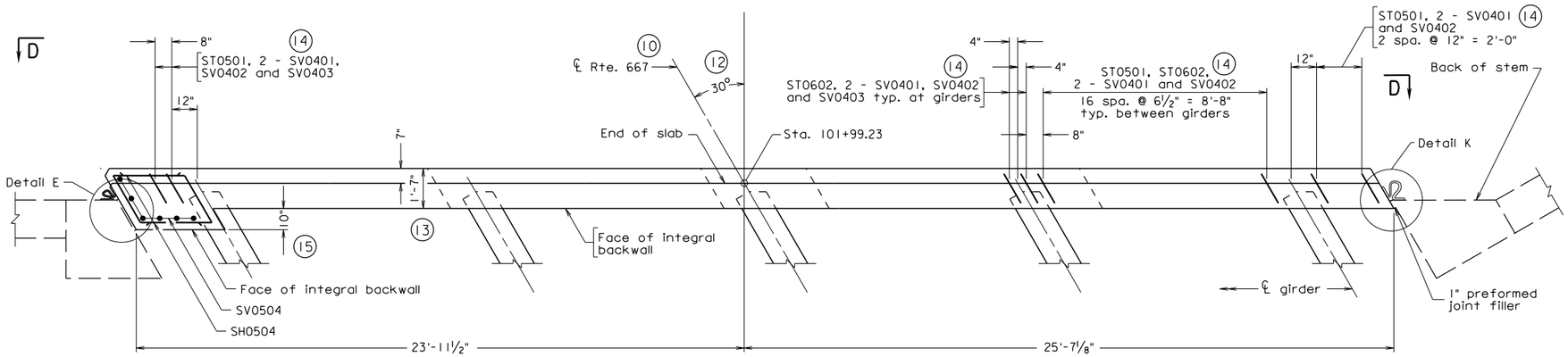

PLAN (1)

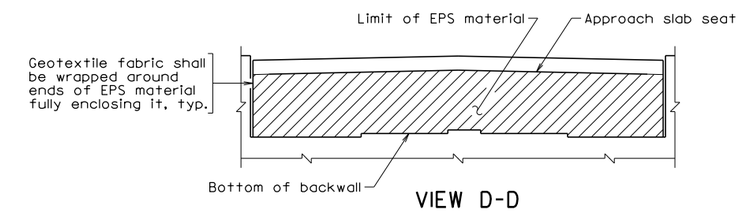

VIEW D-D
Not to scale

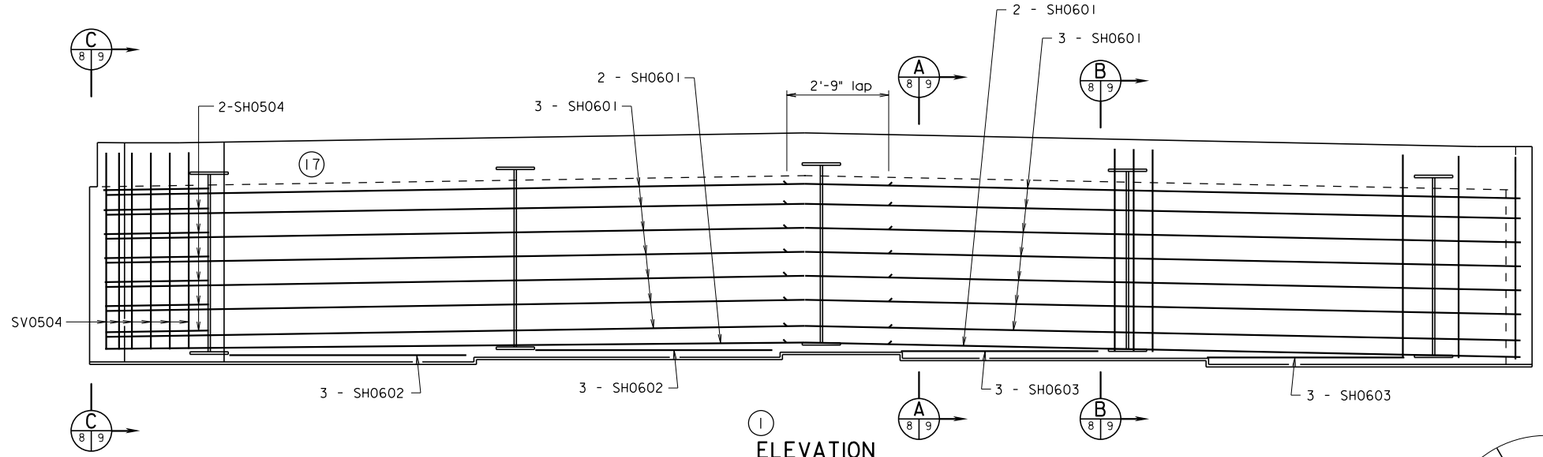

(1)
ELEVATION

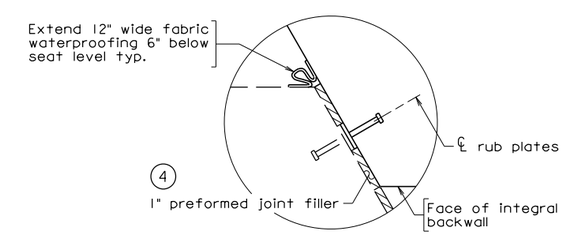

DETAIL E
Not to scale

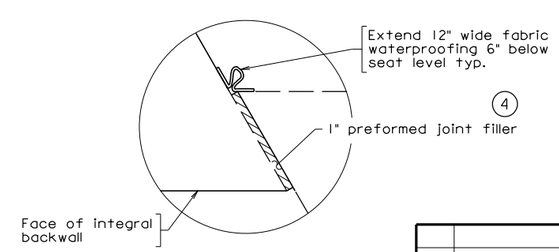

DETAIL K
Not to scale

(30)

999-94.005.dgn

(31)

VDOT S&B DIVISION
RICHMOND, VA
STRUCTURAL ENGINEER

ABUTMENTS
SEMI-INTEGRAL ABUTMENT SAMPLE PLANS
ABUTMENT DETAILS SHEET - STEEL BEAMS/GIRDERS

Scale: ⅜" = 1'-0" unless otherwise noted (1)

©2016, Commonwealth of Virginia

No.	Description	Date
	Revisions	

COMMONWEALTH OF VIRGINIA
DEPARTMENT OF TRANSPORTATION

STRUCTURE AND BRIDGE DIVISION

(28) SEMI-INTEGRAL BACKWALL PLAN AND ELEVATION

Designed: ABC
Drawn: DEF
Checked: GHI

Date: May 2016

Plan: 999-

PART 2
DATE: 18May2016
SHEET 5 of 12
FILE NO. 17.07-5

STATE	FEDERAL AID ROUTE	FEDERAL AID PROJECT	STATE ROUTE	STATE PROJECT	SHEET NO.
VA.	—		667	0667-127-114, B609	6

(29)

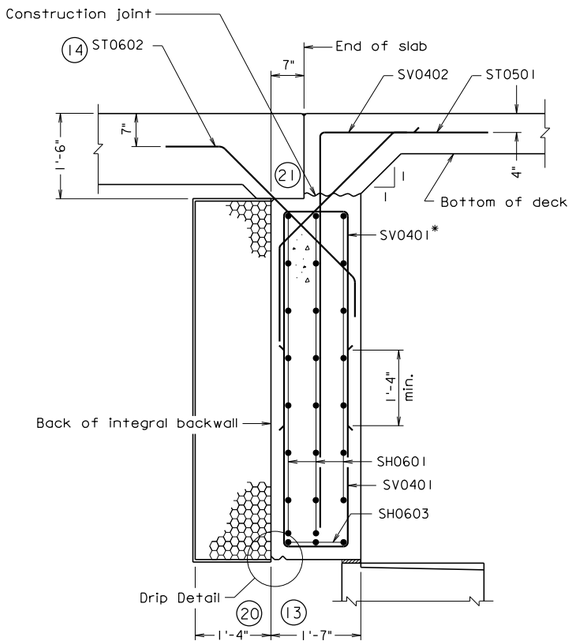

SECTION A (8|9)
For details not shown, see Section B-B

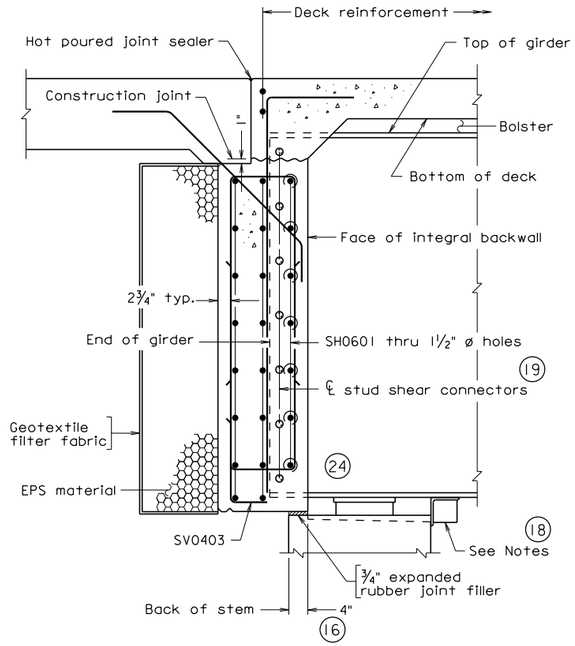

SECTION B (8|9)
For details not shown, see Section A-A

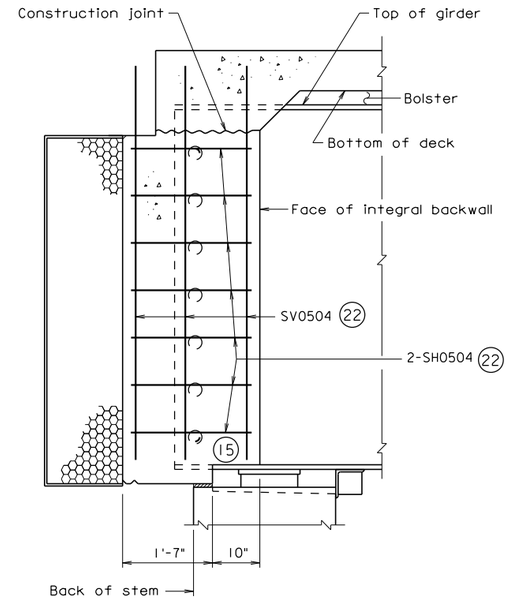

SECTION C (8|9)
For details not shown, see Sections A-A and B-B
For clarity, only SH0504 and SV0504 bars shown

Note: (27)

(18) The Contractor shall install temporary blocking devices acceptable to the Engineer to prevent the superstructure from sliding during construction. Such devices are required at the lower end of each girder and shall be removed after construction is completed. The cost of the devices shall be included in cost of structural steel.

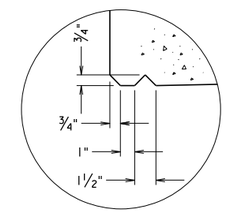

DRIP DETAIL
Not to scale

999-94_006.dgn

(30)

(31)

VDOT S&B DIVISION
RICHMOND, VA
STRUCTURAL ENGINEER

ABUTMENTS
SEMI-INTEGRAL ABUTMENT SAMPLE PLANS
ABUTMENT DETAILS SHEET - STEEL BEAMS/GIRDERS

Scale: ½" = 1'-0" unless otherwise noted (2)

©2016, Commonwealth of Virginia

No.	Description	Date

Revisions

COMMONWEALTH OF VIRGINIA
DEPARTMENT OF TRANSPORTATION

STRUCTURE AND BRIDGE DIVISION

(28) SEMI-INTEGRAL BACKWALL SECTIONS

Designed: ARC
Drawn: DEF
Checked: GHI

Date: May 2016

Plan: 999-

PART 2
DATE: 18May2016
SHEET 6 of 12
FILE NO. 17.07-6

STATE	FEDERAL AID ROUTE	FEDERAL AID PROJECT	STATE ROUTE	STATE PROJECT	SHEET NO.
VA.	—		I-1	0011-044-283, B611	6

(29)

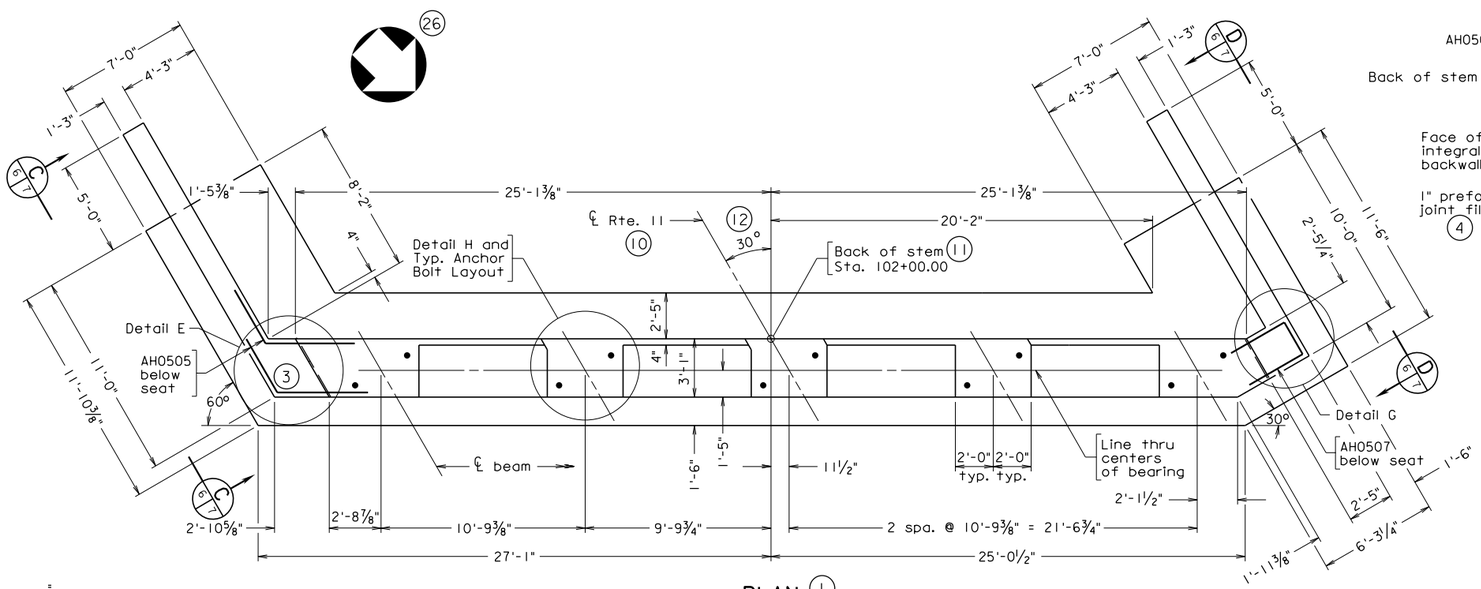

PLAN (1)

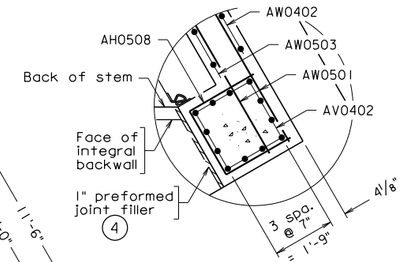

DETAIL G
Not to scale

Notes: (27)

(8) For extruded parapets, widen substructure by 1" (between wing haunches perpendicular to centerline) to allow for extra 1" width in deck and backwall. Any additional cost shall be at the Contractor's expense.

Cost of rub plates and joint filler shall be included in the price of substructure concrete.

(9) For details of semi-integral backwall, see sheets 12 and 13.

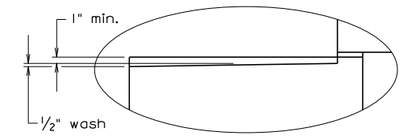

DETAIL J
Scale: 1" = 1'-0"

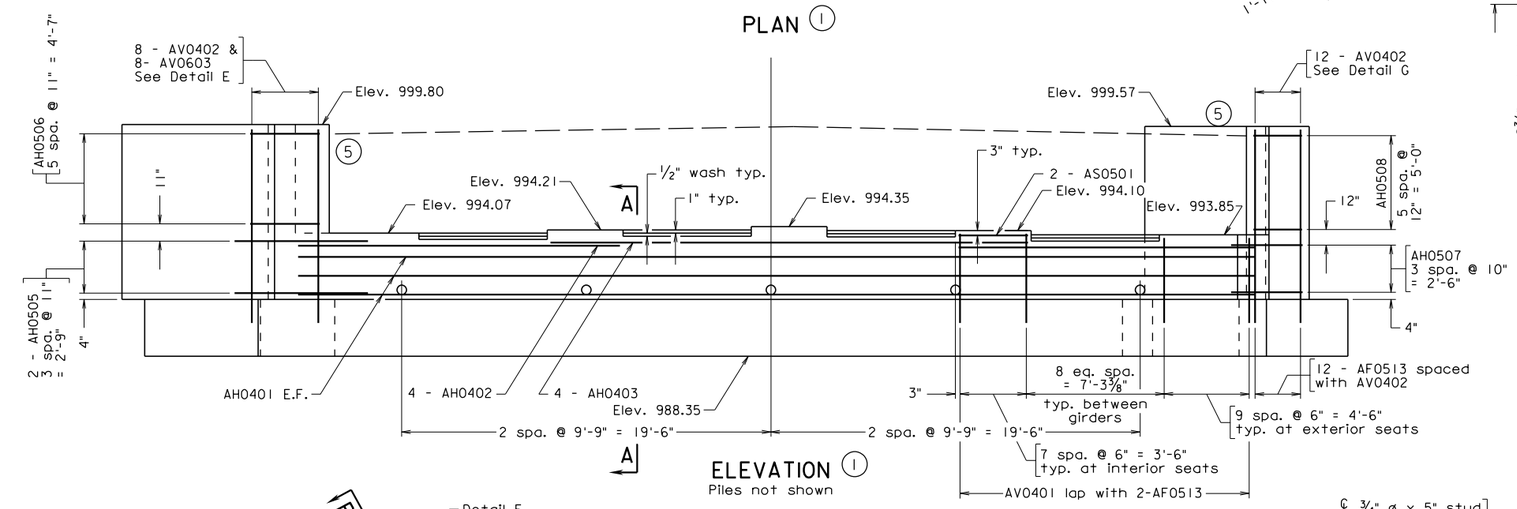

ELEVATION (1)
Piles not shown

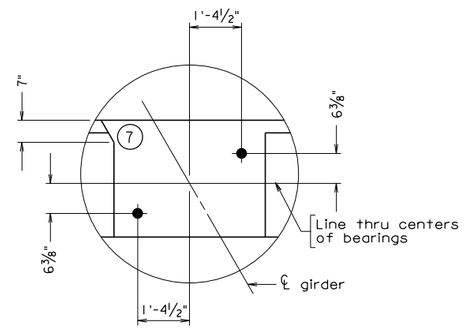

DETAIL H AND TYP. ANCHOR BOLT LAYOUT
Not to scale

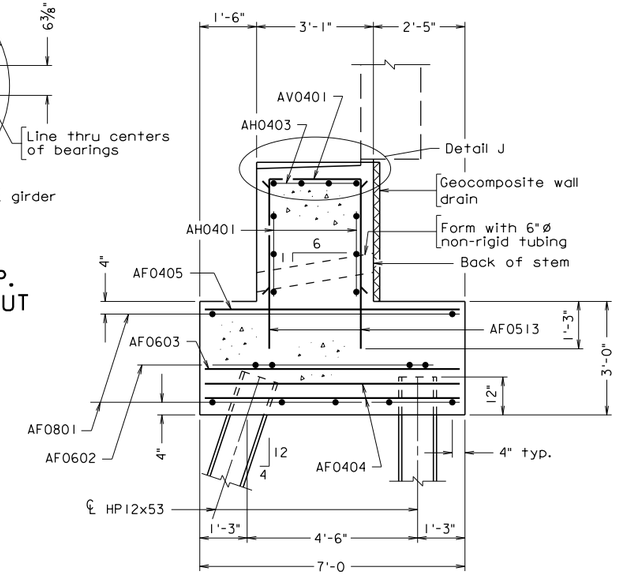

SECTION A-A (2)
Scale: ½" = 1'-0"

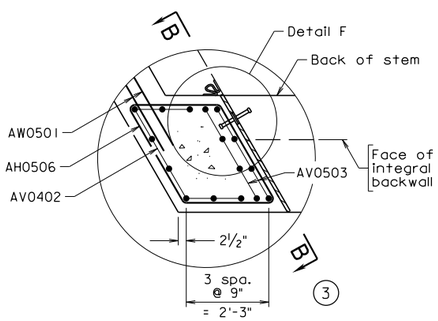

DETAIL E
Not to scale

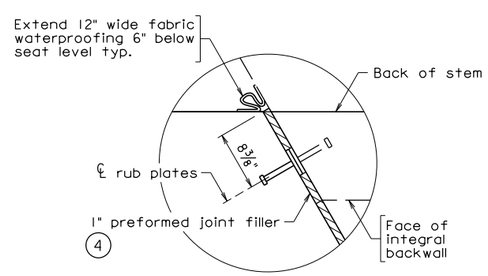

DETAIL F
Not to scale

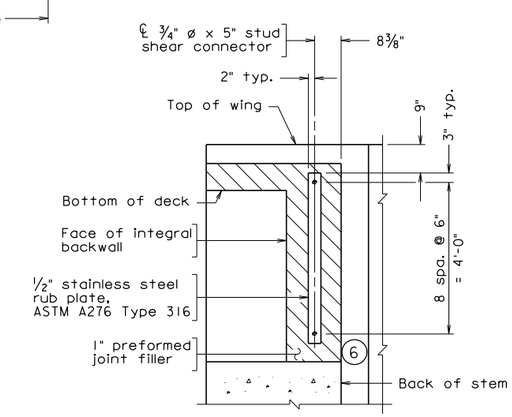

SECTION B-B
Scale: ½" = 1'-0"

ABUTMENTS
SEMI-INTEGRAL ABUTMENT SAMPLE PLANS
ABUTMENT DETAILS SHEET - PRESTR. CONCRETE BEAMS

Scale: ⅜" = 1'-0" unless otherwise noted (1)

©2016, Commonwealth of Virginia

No.	Description	Date
	Revisions	

COMMONWEALTH OF VIRGINIA
DEPARTMENT OF TRANSPORTATION

STRUCTURE AND BRIDGE DIVISION

(28)

ABUTMENT A
PLAN AND ELEVATION

Designed: ABC
Drawn: DEF
Checked: GHI

Date: May 2016

Plan: 999-

PART 2
DATE: 18May2016
SHEET 7 of 12
FILE NO. 17.07-7

(30)

999-98.006.dgn

(31)

VDOT S&B DIVISION
RICHMOND, VA
STRUCTURAL ENGINEER

STATE	FEDERAL AID ROUTE	FEDERAL AID PROJECT	STATE ROUTE	STATE PROJECT	SHEET NO.
VA.	—	·	I-1	0011-044-283, B611	7

(29)

Note: (27)

For additional notes, see sheet 6.

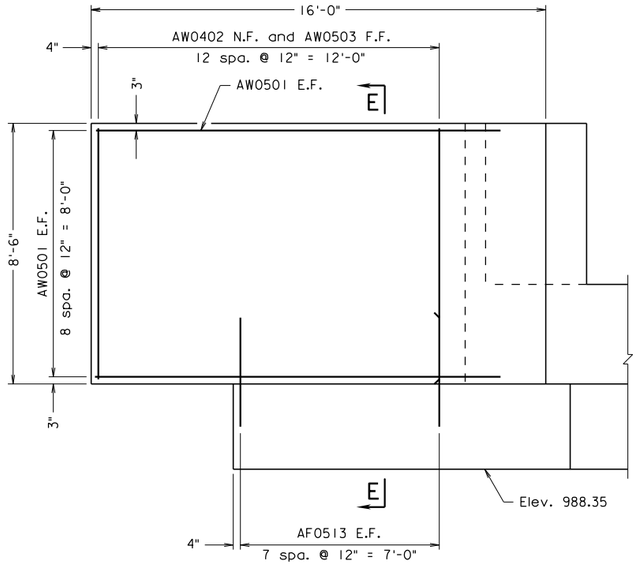

VIEW (C 6 7)

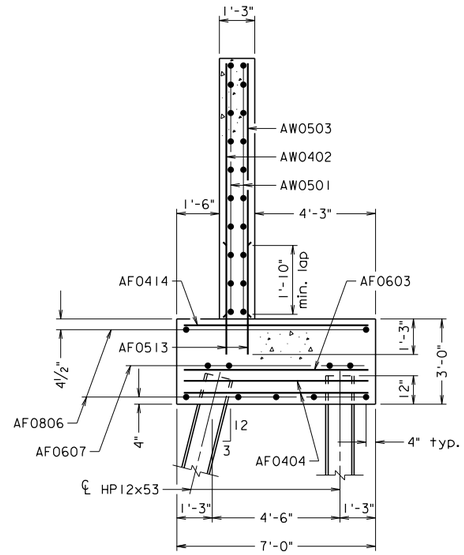

SECTION E-E

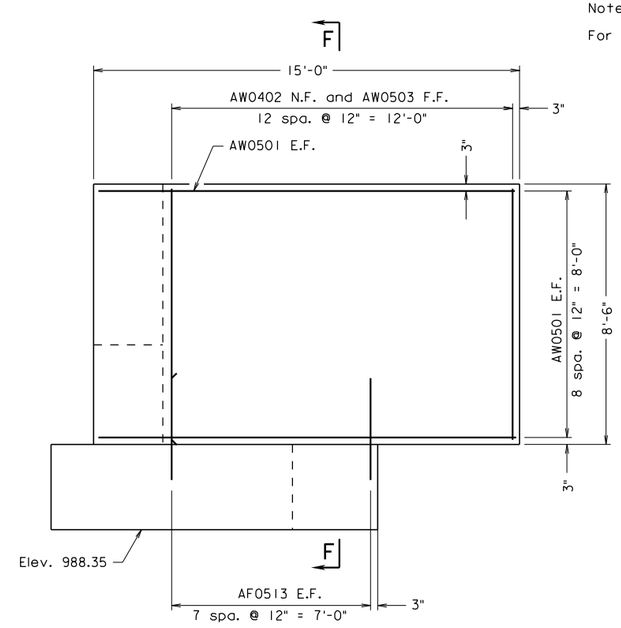

VIEW (D 6 7)

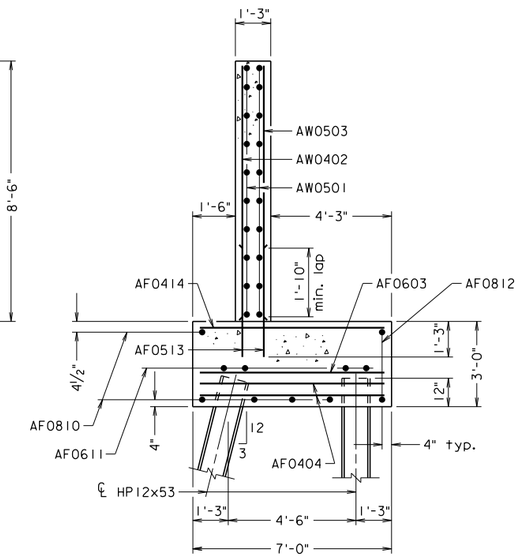

SECTION F-F

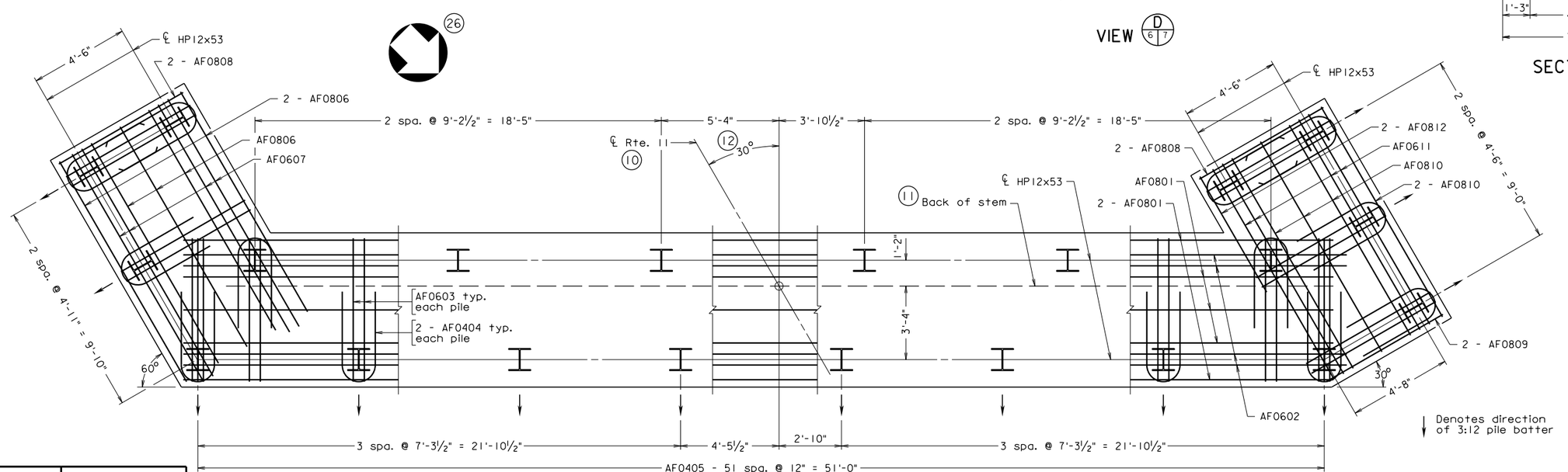

PILE AND FOOTING REINFORCEMENT PLAN

(30)

999-98.007.dgn

(31)

VDOT S&B DIVISION
RICHMOND, VA
STRUCTURAL ENGINEER

ABUTMENTS
SEMI-INTEGRAL ABUTMENT SAMPLE PLANS
ABUTMENT DETAILS SHEET - PRESTR. CONCRETE BEAMS

Scale: ⅜" = 1'-0" unless otherwise noted (1)

©2016, Commonwealth of Virginia

No.	Description	Date
	Revisions	

COMMONWEALTH OF VIRGINIA
DEPARTMENT OF TRANSPORTATION

STRUCTURE AND BRIDGE DIVISION

(28) ABUTMENT A
FOOTING PLAN AND
WINGWALL DETAILS

Designed: ARC
Drawn: DEF
Checked: GH

Date: May 2016

Plan: 999-

PART 2
DATE: 18May2016
SHEET 8 of 12
FILE NO. 17.07-8

STATE	FEDERAL AID ROUTE	FEDERAL AID PROJECT	STATE ROUTE	STATE PROJECT	SHEET NO.
VA.	—		11	0011-044-283, B611	8

(29)

Notes: (27)

Integral backwall concrete shall be placed and cured to a minimum compressive strength of 3000 psi prior to placement of deck concrete.

Backfill operations above seat level shall not be started until deck has been placed and cured to a minimum compressive strength of 3000 psi. Backfill shall be placed such that the differential in fill height between both abutments does not exceed 6" after compaction.

For details of holes through the web and location and number of BC series bars, see sheet 13.

The integral backwalls shall be cast when the least thermal movement of the superstructure can be expected during the period of initial set of the concrete in the backwall, e.g. at dusk or during an expected uniformly cloudy day.

Forms for the backwall shall be attached to the beams only; the forms shall not be attached to or blocked against the abutment stem. The backwall and forms must be free to move in relation to the abutment.

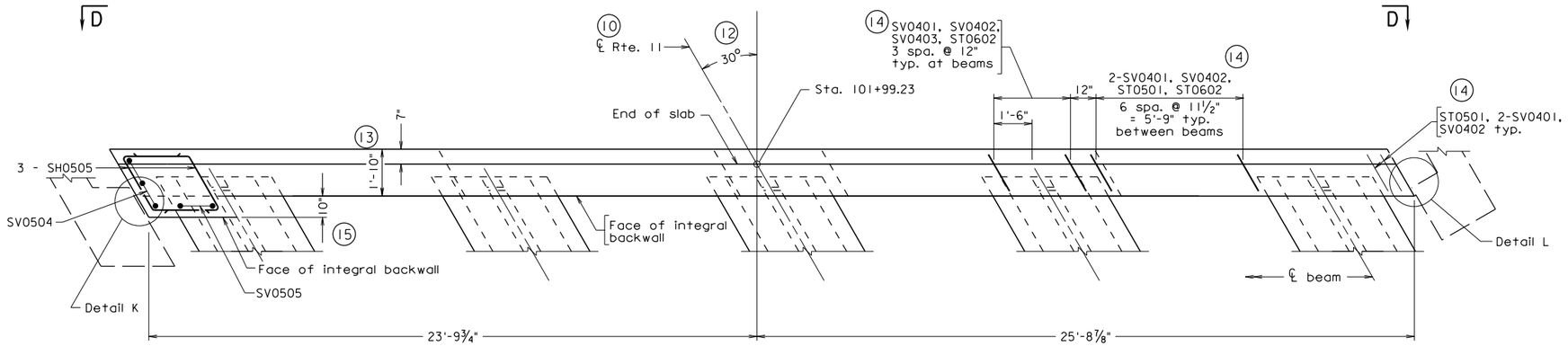

PLAN (1)

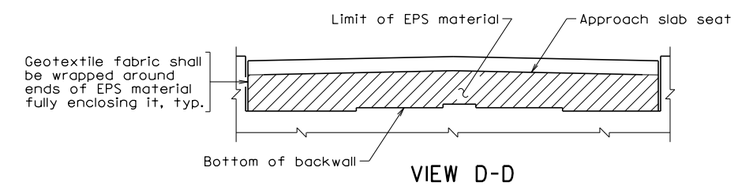

VIEW D-D
Not to scale

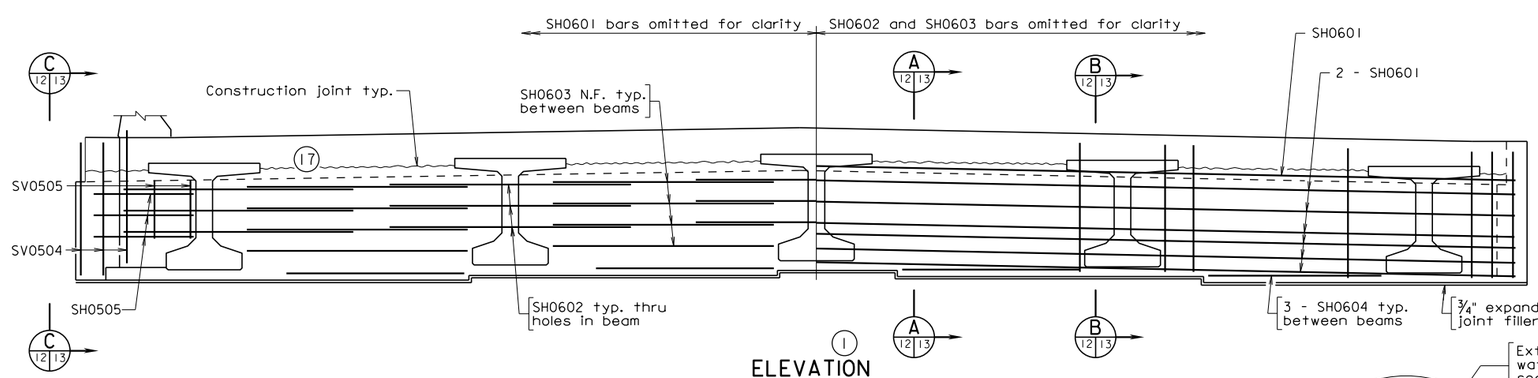

ELEVATION (1)

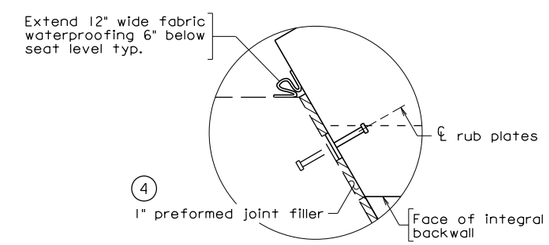

DETAIL K
Not to scale

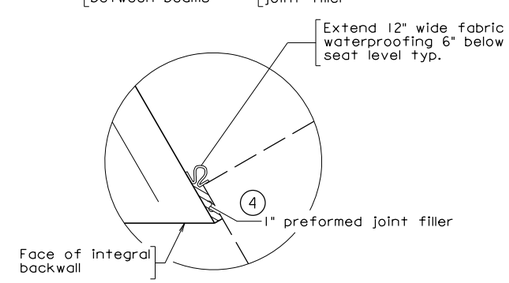

DETAIL L
Not to scale

(30) 999-98.008.dgn

(31)

VDOT S&B DIVISION
RICHMOND, VA
STRUCTURAL ENGINEER

ABUTMENTS
SEMI-INTEGRAL ABUTMENT SAMPLE PLANS
ABUTMENT DETAILS SHEET - PRESTR. CONCRETE BEAMS

Scale: ⅜" = 1'-0" unless otherwise noted (1)

©2016, Commonwealth of Virginia

No.	Description	Date
	Revisions	

COMMONWEALTH OF VIRGINIA
DEPARTMENT OF TRANSPORTATION

STRUCTURE AND BRIDGE DIVISION

(28) SEMI-INTEGRAL BACKWALL PLAN AND ELEVATION

Designed: ABC
Drawn: DEF
Checked: GHI

Date: May 2016

Plan: 999-

PART 2
DATE: 18May2016
SHEET 9 of 12
FILE NO. 17.07-9

STATE	FEDERAL AID ROUTE	FEDERAL AID PROJECT	STATE ROUTE	STATE PROJECT	SHEET NO.
VA.	—	·	I-1	0011-044-283, B611	9

29

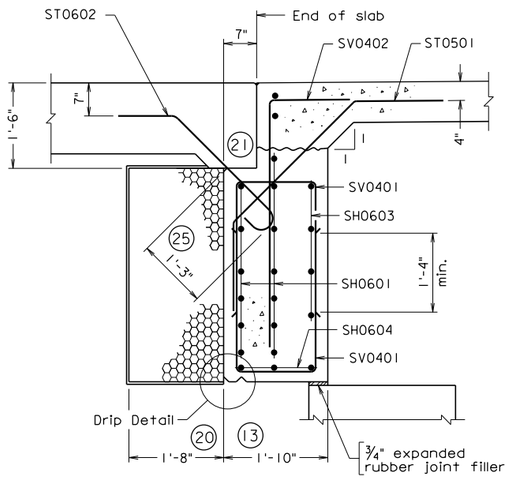

SECTION A (12|13)

For details not shown, see Section B-B

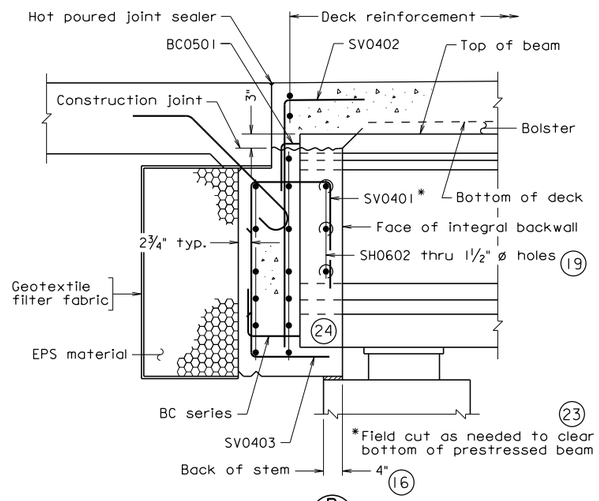

SECTION B (12|13)

For details not shown, see Section A-A

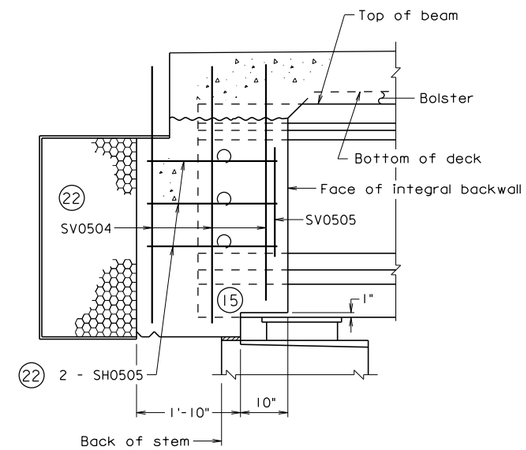

VIEW C (12|13)

For details not shown, see Sections A-A and B-B
For clarity, only SH0505, SV0504 and SV0505 bars shown

Note: 27

18 The Contractor shall install temporary blocking devices acceptable to the Engineer to prevent the superstructure from sliding during construction. Such devices are required at the lower end of each girder and shall be removed after construction is completed. The cost of the devices shall be included in cost of prestressed beams.

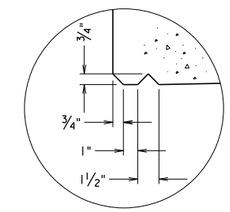

DRIP DETAIL
Not to scale

30 999-98.009.dgn

31

VDOT S&B DIVISION
RICHMOND, VA
STRUCTURAL ENGINEER

ABUTMENTS
SEMI-INTEGRAL ABUTMENT SAMPLE PLANS
ABUTMENT DETAILS SHEET - PRESTR. CONCRETE BEAMS

Scale: ½" = 1'-0" unless otherwise noted 2

©2016, Commonwealth of Virginia

No.	Description	Date
	Revisions	

COMMONWEALTH OF VIRGINIA
DEPARTMENT OF TRANSPORTATION

STRUCTURE AND BRIDGE DIVISION

28 SEMI-INTEGRAL BACKWALL SECTIONS

Designed: ABC
Drawn: DEF
Checked: GHI

Date: May 2016

Plan: 999-

PART 2
DATE: 18May2016
SHEET 10 of 12
FILE NO. 17.07-10

CHECK LIST FOR SAMPLE PLANS:

1. Show full PLAN and ELEVATION views along with a PILE AND FOOTING REINFORCEMENT PLAN for a semi-integral abutment complete with dimensions at a scale of $^{3}/_{8}$" = 1'-0". Regardless of the skew, the elevation view should be projected down from the plan view.

2. Show sections taken through the semi-integral abutment and integral backwall complete with dimensions at a scale of $^{1}/_{2}$" = 1'-0" unless scale is insufficient to show adequate details. Coordinate sections to provide the necessary details with repetition only where required.

3. Wing haunch at acute corner shall be designed to resist the moment and shear induced by the force resulting from the passive earth pressure and the skew. Rub plates and the additional backwall thickness are only required at the acute corners of skewed bridges. Rub plates to be centered vertically and horizontally over contact area.

4. Minimum thickness of the preformed joint filler between the backwall and the wing at the obtuse corner shall be 1". This may be increased due to thermal expansion in the transverse direction.

5. Extend wing 6" above finished grade. Not required for bridges without skew or where terminal wall is on the substructure.

6. Top of rub plate to begin 3" below top of deck. Bottom of rub plate to maintain 2" clear from top of bottom flange for steel superstructures; 3" clear from bottom of beam for concrete. Preformed joint filler to extend as shown.

7. Provide distance from back of stem to break in seat to allow for contraction and creep with 1" clear.

8. Delete this note if railings are used or slip forming of parapets is not allowed.

9. Bridge plans shall be arranged such that backwall details follow the Deck Plan. For general sheet order, see File No. 01.02-4.

10. Label the location centerline/baseline as shown on the title sheet.

11. "Back of stem" shall be used as the reference line for layout of integral backwalls.

12. Label skew angle (if applicable).

13. The minimum width of integral backwall shall be 1'-7" for steel stringers and 1'-10" for concrete stringers. Clipping flanges is preferable to increases in thickness where required due to skew.

14. All ST series and SV series bars shall be aligned parallel to the beam/girder centerline. The maximum spacing shall be 12". ST0602 bars between the backwall and the approach slab (where applicable) are not required outside of the exterior beam/girder.

15. Thickness of backwall shall be increased by 10" at the acute corner of skewed bridges outside of the exterior stringers. The increase in thickness shall end at the top surface of the bottom flange for steel stringers or 1" above the bottom of beam for concrete stringers.

16 Distance between face of integral backwall and back of stem shall be a minimum of 4”.

17 The approach slab seat (7”) shall be provided on all integral backwalls regardless of whether the bridge will have an approach slab.

18 In case of single span semi-integral bridge, use the temporary blocking note shown. Otherwise, delete it.

19 Location and details of holes in the web and the studs should be included with the beam/girder details.

20 For additional details concerning the use of EPS material and calculations for the required thickness, see File No. 17.3-30.

21 To ensure adequate cover on ST0602 bar, the designer must modify the approach slab standard.

22 Maximum spacing is 12”.

23 Note not needed for PCBT-53 and larger.

24 The minimum embedment into the backwall is 6” for steel stringers and 9” for concrete stringers.

25 When approach slab is used with concrete superstructure, hook ST0602 bar and embed as shown.

26 Show North Arrow above plan view.

27 Show Notes as required. For instructions on completing the notes, see File Nos. 04.03-1 and -2.

28 For instructions on completing the title block, see File No. 03.03.

29 For instructions on completing the project block, see File No. 04.01.

30 For instructions on developing the CADD sheet number, see File Nos. 01.01-6 and 01.14-4.

31 For instructions on completing the block for sealing, signing and dating this sheet, see File Nos. 01.16-1 thru -6.

32 Provide the appropriate geotechnical design data in tabular format if not combined with pier data and provided near front of the plan assembly. For additional information, see File No. 17.02-3. The plan set for these sample sheets combined the design data near the front of the plan assembly (i.e., not shown on these sample sheets). See sample pier sheets and accompanying notes in File Nos. 15.03-1 thru -6 for examples of data tables on sheets.

33 Where architectural treatment(s) is used, provide limits of architectural texture, coping widths, texture grid scales, relief, treatment position and other necessary details as applicable. See Chapter 5 of this manual for requirements, details and information for architectural treatment.

GENERAL INFORMATION:

This section of the chapter establishes the practices and requirements necessary for the design and detailing of deck slab extensions at abutments. For general requirements and guidelines on the use of abutments with deck slab extensions, see File Nos. 17.01-4 and -7 thru -16.

Sample design calculations are provided based on the AASHTO LRFD specifications to assist the designer in the design of the deck slab extension and associated structural components.

The sample design calculations contained herein are based on the 4th Edition of the *AASHTO LRFD Bridge Design Specifications* including Interims and VDOT Modifications (IIM-S&B-80.2). The designer is responsible for ensuring his design is accordance with the current edition of the *AASHTO LRFD Bridge Design Specifications* including Interims and VDOT Modifications (current IIM-S&B-80).

The details shown in this section are intended only to provide the designer with the necessary detailing practices and requirements for the detailing of abutments with deck slab extensions. Additional practices and requirements necessary for the design and detailing of abutments with deck slab extensions can be found in Section 17.03 of this chapter.

Sample plan sheets for abutments with deck slab extensions including a check list are provided to show the necessary details required for a complete bridge plan assembly. See File Nos. 17.09-1 thru -7.

Concrete deck slab main and distribution reinforcement shall be detailed and placed in accordance with the requirements set forth in Chapter 10 except where otherwise noted in this section.

Deck slab extensions shall be designed to resist the loads and forces to which the bridge deck system may be subjected. ES series bars shown in the details contained in this section shall be of the size and spacing required when combined with the deck slab distribution reinforcement (SL- series bars), the deck slab extension will have sufficient strength to resist these loads and forces. Deflection of deck slab extension plus live load deflection of bearing assembly shall be limited to no more than one-half the thickness of the expanded rubber joint filler on top of backwall in order to prevent any upward forces being transmitted into the deck slab extension.

Parapet/railing terminal walls shall be located on the superstructure.

The “End of slab” shall be used as a reference line for the “Beginning of bridge” and “End of bridge” shown on the developed section along the centerline or baseline on the title sheet. “End of slab” shall be labeled on the deck slab plan.

The “Face of backwall” shall be used as a construction/layout reference line on the plan view shown on the substructure layout, curved bridge layout, erection diagram and the abutment details.

Deck slab extension details shall be shown with the Deck Slab Plan, Deck Slab Elevations and Deck Slab Placement Schedule in the bridge plan assembly. Deck slab extension details shall be shown using phantom lines with abutment sections.

The design and detailing of abutments for use with deck slab extensions is similar to that for abutments. Wingwall haunches shall be designed to resist the moment and shear transferred through the rub plates.

On projects where the deck extension is utilized and an approach slab is required, then a buried approach slab shall be used. For details of buried approach slabs, see Chapter 19.

Drainage details specific to using a buried approach slab with deck slab extension are included in this section.

The minimum depth of deck slab extension for steel beam/girder superstructures shall be 12”. The depth of deck slab extension shall not exceed 1’- 8”.

Deck slab extension shall bear uniformly on the top of end diaphragm for design strength.

On structure widths up to approximately 48', the designer shall connect the outside depths by a straight line, provided the maximum depth is not exceeded. Examples of deck extension on steel are shown in File No. 17.08-3. For structure widths greater than 48', the designer shall slope the backwalls parallel to top of deck maintaining the minimum depth.

Designer has some flexibility in determining whether to design straight lined or to design parallel to cross slope. Other considerations in this determination are the elevations at the outside edges of deck slab, combination of gradient and skew, depth of diaphragms and size of diaphragms

Straight line design provides for easier construction. Less abutment elevations calculations are needed for design.

Parallel to cross slope provides for a more uniform design. Lower transverse forces are at the acute haunches. Smaller rub plates and smaller load applied to wing haunch may be additional considerations.

Bottom of deck slab extension and top of abutment backwall shall be sloped parallel to finished grade of deck slab while maintaining the minimum depth of 12”. See transverse sections in File No. 17.08-4.

The deck slab shall extend past the back of backwall by a minimum of four (4) inches.

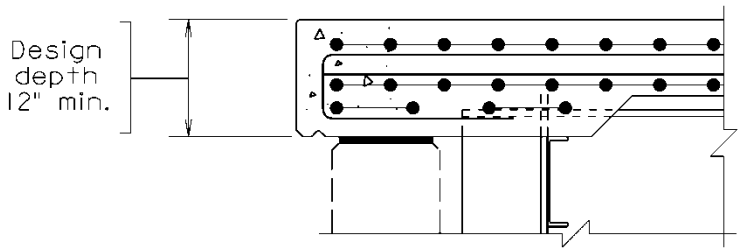

Section on top of diaphragm near outside member.

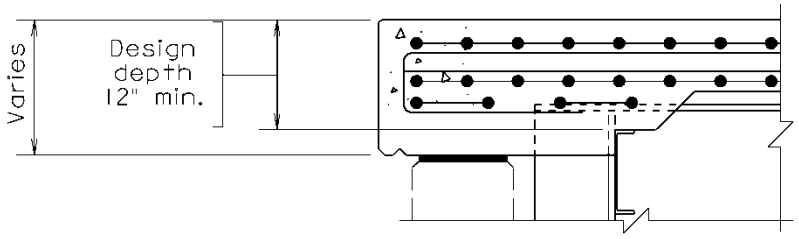

Section shown at interior with straight line when deck slab depth less than diaphragm depth.

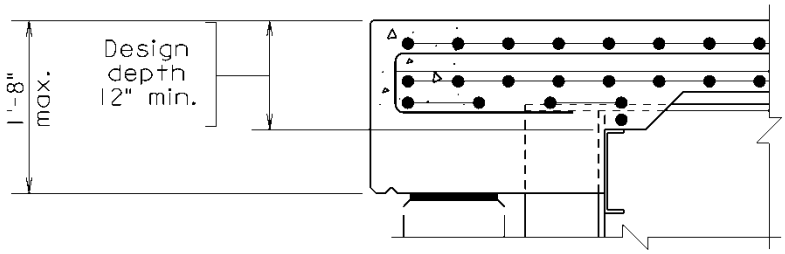

Section shown at maximum thickness with straight line with slab depth less than diaphragm depth.

ABUTMENTS **DECK SLAB EXTENSIONS** **GENERAL INFORMATION**	PART 2 DATE: 06Feb2012 SHEET 3 of 30 FILE NO. 17.08-3

TRANSVERSE SECTIONS:

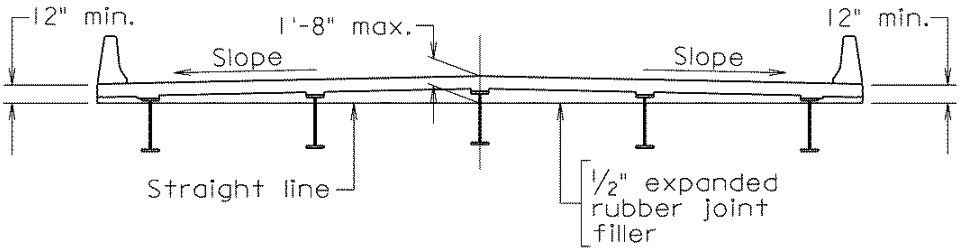

CROWNED DECK SLAB
For use up to approximately 48' width

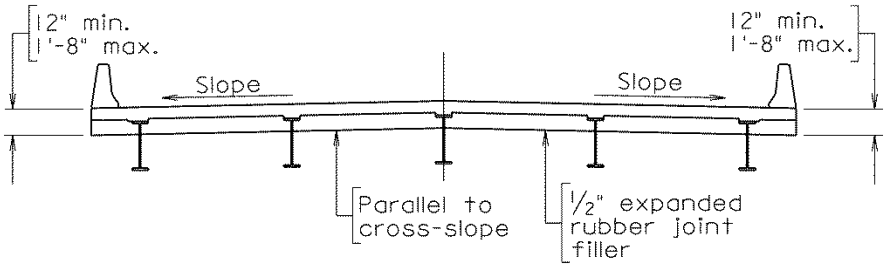

CROWNED DECK SLAB
For use when straight-line exceeds 1'-8" depth

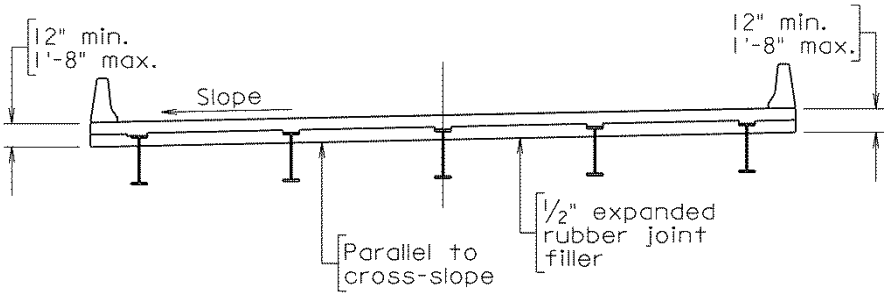

SUPERELEVATED DECK SLAB

ABUTMENTS **DECK SLAB EXTENSIONS** **GENERAL INFORMATION**	PART 2 DATE: 06Feb2012 SHEET 4 of 30 FILE NO. 17.08-4

SAMPLE DESIGN CALCULATIONS

The calculations provided do not correspond to the sample plans shown in File No. 17.09-1 thru -5.

TYPICAL TRANSVERSE SECTION:

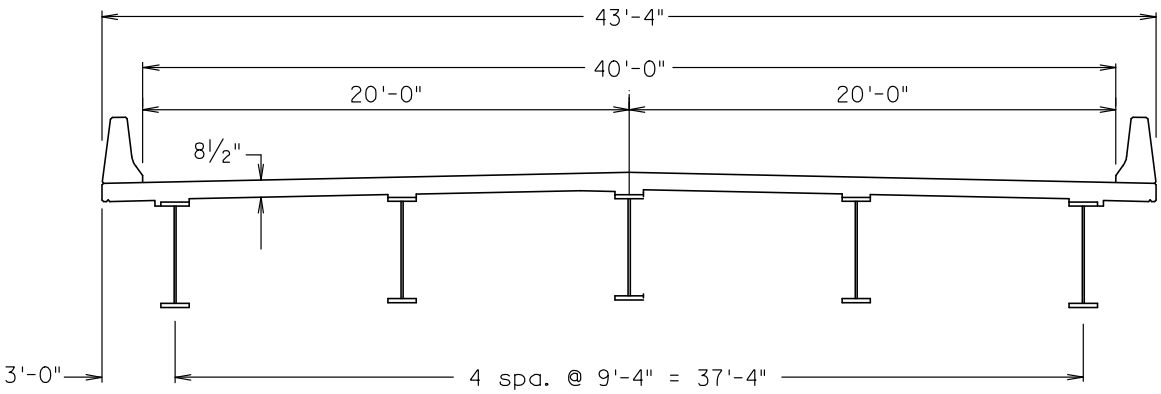

TRANSVERSE SECTION

GIVEN AND ASSUMPTIONS:

γ_{soil} = 145 pcf	Unit weight of soil (select backfill material)	
K_p = 12	Passive earth pressure coefficient	
N_L = 3	Number of lanes	
W_{Bridge} = 43.33 ft	Bridge width	
W_{clear} = 40 ft	Clear bridge width	
L_{Bridge} = 250 ft	Bridge length (end of slab to end of slab)	
L_{span} = 125 ft	Span length at the abutment to be designed	
$L_{Thermal}$ = 125 ft	Length of thermal expansion	AASHTO LRFD 11.6.1.6
S_{Beam} = 9.33 ft	Beam/girder spacing	
Overhang = 3.0 ft	Slab overhang	
$T_{backwall}$ = 1 ft	Thickness of backwall	
T_{deck} = 8.5 in	Thickness of the concrete deck slab	

$CS = 0.02$	Crown rate (cross slope) of bridge deck
$T_{Topflange} = 0.75$ in	Thickness of top flange
$B_{Topflange} = 12$ in	Width of top flange
$T_{Bolster} = 1.5$ in	Thickness of bolster at centerline of bearing
$D_{topdiaph} = 3.0$ in	Distance from bottom of top flange to top of end diaphragm
$d_c = 3.5$ in	Distance from the surface of concrete to center of reinforcing steel
$f_c = 4$ ksi	Compressive strength of deck concrete
$F_y = 60$ ksi	Yield strength of reinforcing steel
$E_s = 29000$ ksi	Modulus of elasticity of steel
$\gamma_{RC} = 150$ pcf	Unit weight of reinforced concrete
$K_1 = 1.0$	Correction factor for source of aggregate
$E_c = 33000\ k_1 \left(\gamma_{rc}\ x\ 1.728\ \frac{in^3}{lb}\right)^{1.5} \sqrt{f_c}$	Modulus of elasticity of concrete AASHTO LRFD 5.4.2.4-01
$\theta_A = 30$ deg	Bridge skew angle
$t_{min} = 0$ deg	Minimum bridge exposure temperature
$t_{max} = 120$ deg	Maximum bridge exposure temperature
$\alpha = 6.5\ x10^{-6} \left(\frac{1}{deg}\right)$	Coefficient of thermal expansion
$n_d = round\left[\left(\frac{E_s}{E_c}\right),0\right] = 8.0$	Modular ratio of steel to concrete for the deck

LRFD LOAD FACTORS: AASHTO LRFD Table 3.4.1-1 and -2

$\gamma_T = 1.2$	Load factor for temperature induced deformations
$\gamma_{EH} = 1.35$	Load factor for passive earth pressure for Strength Limit State

γ_{EHs} = 1.0 Load factor for passive pressure for Service Limit State

γ_1 =

DL	LL	TU	EH	
1.25	1.75	γ_{TU}	γ_{EH}	Strength I
1.25	1.35	γ_{TU}	γ_{EH}	Strength II
1.0	1.0	γ_{TU}	γ_{EHs}	Service I
1.0	1.3	γ_{TU}	γ_{EHs}	Service II

η_D = 1.0 Load modifier (ductility) AASHTO LRFD 1.3.3

η_R = 1.00 Load modifier (redundancy) AASHTO LRFD 1.3.4

η_I = 1.00 Load modifier (importance) AASHTO LRFD 1.3.5

$\eta = \eta_D \times \eta_R \times \eta_I$ Overall load modifier AASHTO LRFD 1.3.2.1-1

η = 1 Per current VDOT IIM-S&B-80, all load modifiers shall be = 1.0 for all Limit States

m = 1.0 Multiple presence factor AASHTO LRFD 3.6.1.1.2-1

In accordance with VDOT standards, the multiple presence factor shall be taken as 1.0 for design of deck extension.

IM = 0.75 Dynamic load allowance for deck extension AASHTO LRFD 3.6.2.1-1

In accordance with VDOT requirements, the dynamic load allowance shall be taken as 0.75, similar to deck joints.

LRFD REDUCTION FACTORS: ASHTO LRFD 5.5.4.2.1

Φ_{fc} = 0.90 For bending in reinforced concrete

Φ_{vc} = 0.90 For shear and torsion in reinforced concrete

LRFD EXPOSURE FACTORS:

γ_e = 0.75 Class 2 Exposure Condition AASHTO LRFD 5.7.3.4

DECK EXTENSION DEPTH:

Determine depth of deck extension:

T_{deck} = 8.5 in.

$T_{Bolster}$ = 1.50 in

$T_{Topflange}$ = 0.75 in

$D_{topdiaph}$ = 3.0 in.

$D_{slabdiaph} = T_{deck} + T_{Bolster} + T_{Topflange} + D_{topdiaph}$ Depth from top of slab to top of end diaphragm/channel at exterior girder

$D_{slabdiaph}$ = 8.5 + 1.5 + 0.75 + 3.0 = 13.75 in

Change in depth across overhang due to cross slope = Overhang x CS = 3.0 ft x 0.02 = 0.72 in

Thickness of slab at the exterior edge = $D_{slabedge} = D_{slabdiaph} - T_{Topflange}$
= 13.00 – 0.75 = 13.00 in

Determine whether to design parallel to cross-slope or straight-line from exterior to exterior edge of deck slab:

Change in depth between centerline and exterior edge due to cross slope =

$\frac{W_{Bridge}}{2}$ CS = 43.33 ft /2 x 12in/ft x 0.02 = 5.20 in

Depth of deck extension at centerline of slab = $D_{slabcenter}$ = 13.00 + 5.20 in = 18.20 in

Minimum deck extension thickness = 12.00 in, see File Nos. 20.04-2 and -3.

Maximum deck extension thickness = 20.00 in, see File Nos. 20.04-2 and -3.

Check that the deck extension criteria is met at the exterior edge, exterior diaphragm and at the centerline:

For the example problem, assume that no additional considerations affect the design. The minimum and maximum depth requirements for deck slab extension with a crown deck utilizing straight-line from exterior to exterior must be met.

Exterior depth of deck > 12 in

Depth of deck at exterior diaphragm > 12 in

Centerline depth of deck < 20 in

If design is to be parallel to the cross-slope, the design depth is to the top of the diaphragm,

$D_{slabdiaph}$ = 13.75 in

If design is to be straight-line, the exterior edge depth controls the design depth,
$D_{slabedge}$ = 13.00 in

$D_{design} = D_{slabedge}$ = 13.00 in Straight-line method controls

Design for flexure:

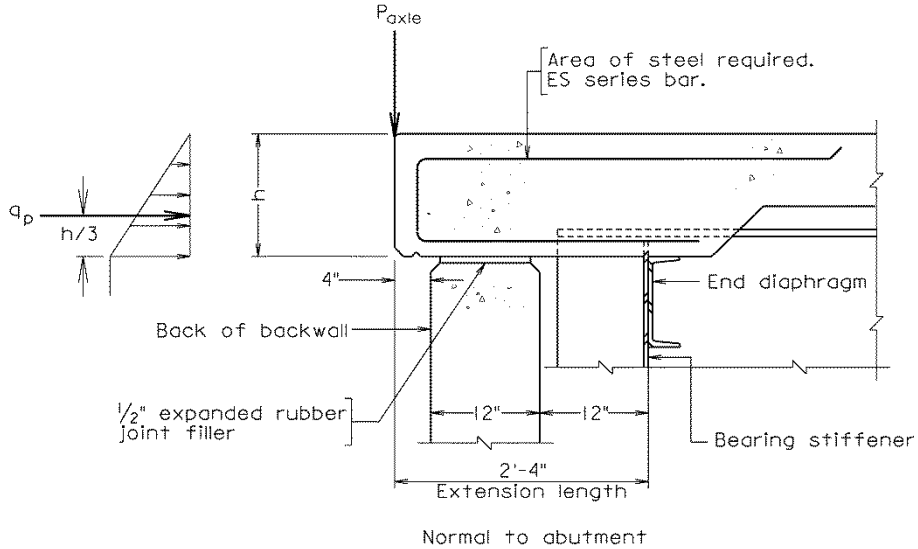

SLAB END DETAIL

Determine Load Geometry:

$Overhang_{ext}$ = 4.0 in — Extension overhang beyond backwall

$T_{Backwall}$ = 12.00in — Backwall thickness

D_{tobrg} = 12.00 in — Distance from centerline of bearing to front face of backwall

Extension = $Overhang_{ext} + T_{Backwall} + D_{tobrg}$ = 4 + 12 + 12 = 28.00 in

$$S_{ext} = \frac{Extension}{\cos(\theta_A)} = \frac{28.0}{\cos(30)} = 32.33 \text{ in}$$

Determine deck extension moments and shears due to dead load:

$$h_{avg} = \frac{D_{design} + D_{slabcenter}}{2}$$ — Average height of deck extension

$$= \frac{13 + 18.2}{2} = 15.60 \text{ in}$$

$W_{DL} = \gamma_{RC} \times h_{avg}$ = 0.150 x 15.6/12 = 0.20 ksf/foot of slab

$$M_{DC} = \frac{W_{DL} \times S_{ext}^2 \times 1\text{ft}}{2}$$

$$= \frac{0.2 \times (32.33/12)^2}{2} = 0.71 \text{ k-ft/foot of slab}$$

$V_{DC} = W_{DL} \times S_{ext} = 0.53$ klf
$= 0.2 \times (32.33/12) = 0.53$ klf/foot of slab

Determine deck extension moments and shears due to live load:

$P_{axle} = 32.0$ k — Axle load for HL-93 vehicle

$w_{lane} = 0.64$ klf — Lane load for HL-93 vehicle

$$E_1 = 84.0 \text{ in} + 1.44\sqrt{\left(\frac{S_{ext}}{12}\right)\left(W_{bridge}\right)} = 99.56 \text{ in}$$ AASHTO LRFD 4.6.2.3

$$= 84.0 \text{ in} + 1.44\sqrt{\left(\frac{32.33}{12}\right)\left(43.33\right)} = 99.56 \text{ in}$$

$$E_2 = \frac{12\left(W_{bridge}\right)}{N_L} = \frac{12\left(43.33\right)}{3} = 173.32 \text{ in}$$

E = E1 < E2 = 99.56/12 = 8.30 ft

$$M_{LL} = \left(\frac{32 \times 32.33/12}{8.3} + \frac{0.64 \times (32.33/12)^2}{2 \times 8.3}\right) 1 \text{ ft} = 10.67 \text{ k-ft/foot of slab}$$

$$V_{LL} = \frac{P_{axle} + w_{lane} \times S_{ext}}{E}$$

$$= \frac{32 + 0.64 \times (32.33/12)}{8.3} = 4.06 \text{ klf/foot of slab}$$

Determine deck extension moments and shears due to passive earth pressure:

$q_p = ½ \times Kp \times \gamma_{soil} \times (1\text{ft})\, h_{avg}^2$
$= ½ \times 12 \times 145 \times (1\text{ft})\,(15.6/12)^2 = 1470.30$ lb/foot of slab

$$e_p = \frac{h_{avg}}{2} - \frac{h_{avg}}{3} = \frac{15.6}{2} - \frac{15.6}{3} = 0.22 \text{ ft}$$

$M_{EH} = q_p \times e_p = 1.473 \times 0.22 = 0.32$ k-ft/foot of slab

$$P_{EH} = \frac{M_{EH}}{S_{ext} \times 1\text{ft}} = \frac{0.32}{(32.33/12) \times 1} = 0.12 \text{ klf/foot of slab}$$

FACTORED LOADS FOR STRENGTH I LIMIT STATE:

$M_{UI} = \eta\,[\gamma_{DCI} \times M_{DC} + \gamma_{LLI} \times m\,(1 + IM)\,M_{LL} + \gamma_{EH} \times M_{EH}]$ AASHTO LRFD 3.4.1-1
$= 1.0\,[1.25 \times 0.71 + 1.75 \times 1.0\,(1 + 0.75)\,10.67 + 1.35 \times 0.32]$

$M_{0,0} = M_{uI} = 34.00$ k-ft

FACTORED LOADS FOR STRENGTH II LIMIT STATE:

$M_{UII} = \eta [\gamma_{DCII} \times M_{DC} + \gamma_{LLII} \times m (1 + IM) M_{LL} + \gamma_{EH} \times M_{EH}]$ AASHTO LRFD 3.4.1-1

$= 1.0[1.25 \times 0.71 + 1.35 \times 1.0 (1 + 0.75) 10.67 + 1.35 \times 0.32]$

$M_{1,0} = M_{UII} = 26.53$ k-ft

FACTORED LOADS FOR SERVICE I LIMIT STATE:

$M_{serviceI} = \eta [\gamma_{DCserviceI} \times M_{DC} + \gamma_{LLserviceI} \times m (1 + IM) M_{LL} + \gamma_{EHs} \times M_{EH}]$ AASHTO LRFD 3.4.1-1

$= 1.0 [1.0 \times 0.71 + 1.0 \times 1.0 (1 + 0.75) 10.67 + 1.0 \times 0.32]$

$M_{2,0} = M_{serviceI} = 19.70$ k-ft

FACTORED LOADS FOR SERVICE II LIMIT STATE:

$\gamma_{LLServiceII} = \gamma_{3,1} = 1.30$

$\gamma_{DCserviceII} = \gamma_{3,1} = 1.00$

$\gamma_{EHs} = 1.00$

$M_{serviceII} = \eta [\gamma_{DCserviceII} \times M_{DC} + \gamma_{LLserviceII} \times m (1 + IM) M_{LL} + \gamma_{EHs} \times M_{EH}]$ AASHTO LRFD 3.4.1-1

$= 1.0 [1.0 \times 0.71 + 1.3 \times 1.0 (1 + 0.75) 10.67 + 1.0 \times 0.32]$

$M_{3,0} = M_{serviceII} = 25.31$ k-ft

MOMENT SUMMARY:

$$M = \begin{pmatrix} 34.00 \\ 26.53 \\ 19.70 \\ 25.31 \end{pmatrix} \text{k-ft} \quad \begin{matrix} \text{Strength I} \\ \text{Strength II} \\ \text{Service I} \\ \text{Service II} \end{matrix}$$

$M_u = \max = 34.00$ k-ft

$M_{service} = \max = 25.31$ k-ft

Determine area of reinforcement required:

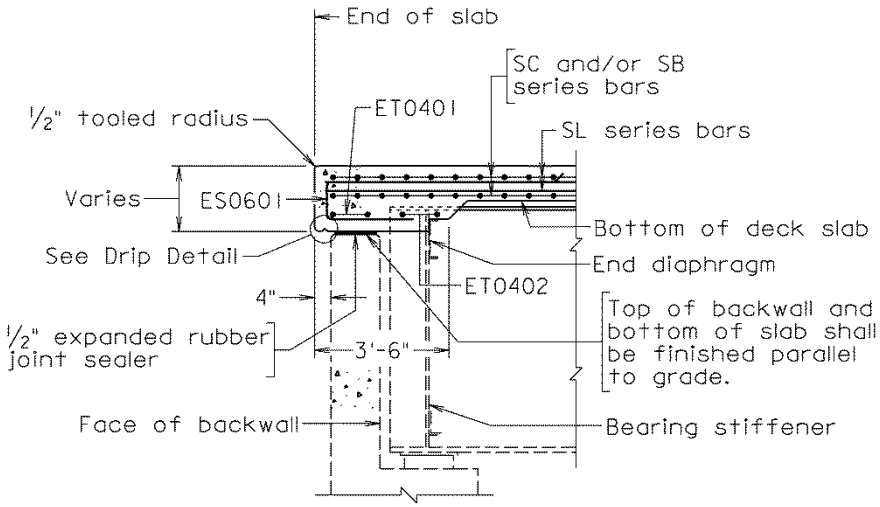

SLAB END DETAIL

$A_{sslabtop}$ = 0.19 in^2/foot of slab	Area of top distribution steel already provided in deck slab
$A_{sslabbot}$ = 0.19 in^2/foot of slab	Area of bottom distribution steel already provided in deck slab
$d = h_{avg} - d_c = 15.6 - 3.5 = 12.10$ in	Depth to centroid of outermost layer of reinforcing steel
b = 12 in	Design width

$$m = \frac{F_y}{0.85 \text{ x } f'_c} = \frac{60}{0.85 \times 4} = 17.65$$

$$R_u = \frac{M_u}{\varphi_{fc} \text{ x } b \text{ x } d^2} = \frac{34.00 \times 12{,}000}{0.9 \text{ x } 12 \text{ x } 12.1^2} = 258.01 \text{ psi}$$

$$\rho = \frac{1}{m} \text{ x } \left[1 - \sqrt{1 - \left(2 \text{ x } m \text{ x } \frac{R_u}{F_y}\right)}\right]$$

$$= \frac{1}{17.65} \text{ x } \left[1 - \sqrt{1 - \left(2 \text{ x } 17.65 \text{ x } \frac{258.01/1000}{60}\right)}\right] = 0.0045$$

$A_{stotreq} = b \text{ x } \rho \text{ x } d = 12 \text{ x } 0.0045 \text{ x } 12.1 = 0.65 \text{ in}^2$

$A_{sadditional} = A_{stotreq} - A_{sslabtop} = 0.46 \text{ in}^2$

Select bar size and spacing:

Note: Maximum reinforcement size is limited to #6 bar and spacing shall not be less than four (4) inches.

Try #5 bars @ 7.5 in. spacing

$A_{sprovadditional}$ = = 0.50 in^2 $A_{sprovadditional} \geq A_{sadditional}$

$A_{stotprov} = A_{sprovadditional} + A_{sslabtop}$ = 0.69 in^2 $A_{stotprov} \geq A_{stotreq}$ OK

$$a = \frac{A_{stotprov} \times F_y}{0.85 \times f'_c \times b}$$ Depth of compression block

$$= \frac{0.69 \times 60}{0.85 \times 4 \times 12} = 1.01 \text{ in}$$ AASHTO LRFD 5.7.3.2.1

$$M_n = A_{stotprov} \times F_y \left(d - \frac{a}{2}\right)$$

$$= 0.69 \times 60 \left(12.1 - \frac{1.01}{2}\right)/12 = 39.77 \text{ k-ft}$$

$\Phi_{fc} \times M_n$ = 0.9 x 39.77 =35.80 k-ft

M_u = 34.00 k-ft

$\Phi_{fc} \times M_n > M_u$, therefore OK

In accordance with current IIM-S&B-80, control of cracking by distribution of reinforcement shall not be applied to decks and deck systems.

Check minimum reinforcement requirement: AASHTO LRFD 5.7.3.3.2

$f_r = 0.37\sqrt{f'_c} = 0.37\sqrt{4} = 0.74$ ksi Modulus of rupture AASHTO LRFD 5.4.2.6

$$I_g = \left(\frac{1}{12}\right)(b)(h_{avg}^3)$$ Gross moment of inertia

$$= \left(\frac{1}{12}\right)(12)(15.6^3) = 3796.42 \text{ in}^4$$

$$y_{Bw} = \frac{h_{avg}}{2} = \frac{15.6}{2} = 7.80 \text{ in}$$

$$M_{cr} = \frac{f_f \times I_g}{y_{Bw}} = \frac{0.74 \times 3796.42}{7.8} = 30.01 \text{ k-ft}$$

Min reinforcement is based on the requirement that $\phi_b \times M_n$ is greater than the lesser of 1.2 x M_{crBW} and 1.33 x M_u

$\Phi_{fc} \times M_n$ = 0.9 x 39.77 =35.80 k-ft Nominal resistance

1.33 x M_u = 1.33 x 34.00 =45.22 k-ft 1.33 times the factored design load

1.2 M_{CR} =1.2 x 30.01-ft = 36.02 k-ft 1.2 times the cracking moment

$\Phi_{fc} \times M_n >$ min (1.33 x M_u, 1.2 x M_{cr}) No Good

Therefore, try #6 bars @ 7.5 in. spacing

Recompute capacity for new bar size and spacing:

Try #6 bars @ 7.5 in. spacing

$A_{sprovadditional}$ = 0.70 in^2 $A_{sprovadditional} \geq A_{sadditional}$ OK

$A_{stotprov} = A_{sprovadditional} + A_{sslabtop} = 0.89\ in^2$ $\quad A_{stotprov} \geq A_{stotreq}$ OK

$a = \dfrac{A_{stotprov} \times F_y}{0.85 \times f'_c \times b}$ Depth of compression block

$= \dfrac{A_{stotprov} \times F_y}{0.85 \times f'_c \times b} = 1.31$ in AASHTO LRFD 5.7.3.2.1

$M_n = A_{stotprov} \times F_y \left(d - \dfrac{a}{2}\right)$

$= 0.89 \times 60 \left(12.1 - \dfrac{1.31}{2}\right)/12 = 51.15$ k-ft

$\Phi_{fc} \times M_n = \Phi_{fc} \times 51.15 = 46.03$ k-ft

$M_u = 34.00$ k-ft

$\Phi_{fc} \times M_n > M_u$, Therefore OK

Check minimum reinforcement requirement: AASHTO LRFD 5.7.3.3.2

$f_r = 0.37\sqrt{f'_c} = 0.37\sqrt{4} = 0.74$ ksi Modulus of rupture AASHTO LRFD 5.4.2.6

$I_g = \left(\dfrac{1}{12}\right)(b)(h_{avg}^3)$ Gross moment of inertia

$= \left(\dfrac{1}{12}\right)(12)(15.6^3) = 3796.42\ in^4$

$y_{Bw} = \dfrac{h_{avg}}{2} = \dfrac{15.6}{2} = 7.80$ in

$M_{cr} = \dfrac{f_f \times I_g}{y_{Bw}} = \dfrac{0.74 \times 3796.42}{7.8} = 30.01$ k-ft

Min reinforcement is based on the requirement that $\phi_b \times M_n$ is greater than the lesser of $1.2 \times M_{crBW}$ and $1.33 \times M_u$

$\Phi_{fc} \times M_n = 0.9 \times 51.15 = 46.03$ k-ft Nominal resistance

$1.33 \times M_u = 1.33 \times 34.00 = 45.22$ k-ft 1.33 times the factored design load

$1.2\ M_{CR} = 1.2 \times 30.01$-ft $= 36.02$ k-ft 1.2 times the cracking moment

$\Phi_{fc} \times M_n > \min(1.33 \times M_u, 1.2 \times M_{cr})$ therefore OK

Therefore, provide #6 bars (ES series) @ 7.5 in. spacing.

Note: The designer should also check AASHTO 5.10.3 – Spacing of reinforcement and AASHTO 5.10.8 - Shrinkage and Temperature Reinforcement.

Check distribution reinf. (main reinforcement parallel to traffic): AASHTO LRFD 9.7.3.2

$\dfrac{100ft}{\sqrt{S_{ext}}} \leq 50$ $\quad Percent_{distr} = \dfrac{100ft}{\sqrt{32.33/12}} = 60.92 \leq 50$

Therefore use 50% of main reinforcement

$A_{stotdistreq} = A_{stotprov} \times \frac{\min(50, Percent_{distr})}{100}$

$= 0.89 \times \frac{\min(50, Percent_{distr})}{100} = 0.45 \text{ in}^2 \text{ /foot of slab}$

Check current reinforcement provided in deck slab (#5 bars at 5.5 in. on center).

$A_{sslabdist} = 0.68 \text{ in}^2\text{/foot of slab} > 0.45 \text{ in}^2\text{/foot of slab}$

The current transverse reinforcement in the deck is sufficient to function as distribution reinforcement for the deck extension. Use ET04 bars in the bottom of the deck extension.

Check deflection of the deck slab extension:

$$\Delta_{Load} = \frac{P_{service} \times S_{ext}^3}{3 \times E_c \times I}$$

$P_{service} = \eta \times [\gamma_{DCserviceI} \times V_{DC} + \gamma_{LLserviceI} \times m\,(1 + IM) \square V_{LL} + \gamma_{EHS} \times P_{EH}]$ AASHTO LRFD 3.4.1-1

$= 1.0 \times [1.0 \times 0.53 + 1.0 \times 1.0\,(1 + 0.75) \square 4.06 + 1.0 \times 0.12]$

$= 7.76$ klf

$S_{ext} = 32.33$ in

$E_c = 3834.25$ ksi

I = moment of inertia

For computing the moment of inertia for use in deflection computations, Article 5.7.3.6.2 of the AASHTO LRFD specifications gives the following equation:

$$I_e = \left(\frac{M_{cr}}{M_a}\right)^3 I_g + \left[1 - \left(\frac{M_{cr}}{M_a}\right)^3\right] I_{cr} \le I_g$$ AASHTO LRFD 5.7.3.6.2-1

$M_{cr} = 30.01$ k-ft

$M_a = M_u = 34.00$ k-ft

$I_{gmin} = \frac{b \times D_{slabedge}^3}{12} = 2197.00 \text{ in}^4$

$n_d = 8.00$

b = 12.00 in

$d_{min} = 9.5$ in

$A_{stoptransf} = n_d \times A_{stotprov} = 8 \times 0.89 = 7.15 \text{ in}^2$ /foot of slab

Find distance to the centroid, c_{comp}

Part	Area	Y	Av
Comp Zone	$A_1 = b \cdot c_{comp}$	$y_1 = \frac{c_{comp}}{2}$	$\frac{b \cdot comp^2}{2}$
Tension Zone	$A_2 = A_{stoptransf}$	$y_2 = c_{comp} - d_{min}$	$A_{stoptransf} \cdot (c_{comp} - d_{min})$

Find c_{comp} by Σ Ay = 0

b = 12.00 in $\quad d_{min}$ = 9.50 in $\quad A_{stoptransf}$ = 7.15 in^2

$A_c = \frac{b}{2} = \frac{12}{2}$ = 6.0 in

$B_c = A_{stoptransf}$ = 7.15 in^2

$C_c = -d_{min} \times A_{stoptransf} = -9.5 \times 7.15 = -67.94$ in^3

$$c_{comp1} = \frac{-B_c + \sqrt{B_c^2 - 4 \times A_c C_c}}{2 \times A_c} = \frac{-7.15 + \sqrt{7.15^2 - 4 \times 6 \times -67.94}}{2 \times 6} = 2.82 \text{ in}$$

$$c_{comp2} = \frac{-B_c - \sqrt{B_c^2 - 4 \times A_c C_c}}{2 \times A_c} = \frac{-7.15 - \sqrt{7.15^2 - 4 \times 6 \times -67.94}}{2 \times 6} = -4.01 \text{ in}$$

$c_{comp} = \max(c_{comp1}, c_{comp2})$ = 2.82 in

Therefore, the centroid axis is c_{comp} = 2.82 in above the bottom of the section.

$A_1 = b \times c_{comp} = 12 \times 2.82 = 33.86$ in^2 $\qquad y_1 = \frac{c_{comp}}{2} = \frac{2.82}{2}$ =1.41 in

$I_1 = \frac{b \times c_{comp}^3}{12} = \frac{12 \times 2.82^3}{12} = 22.46$ in^4 $\qquad A_2 = A_{stoptransf} = 7.15$ in^2

$y_2 = c_{comp} - d_{min} = 2.82 - 9.5 = -6.68$ in $\qquad I_2 = 0$ in^4

Part	Area (in^2)	v (in)	I (in^4)	Av^2 (in^4)
Comp. zone	A_1 = 33.86 in^2	y_1 = 1.41 in	I_1 = 22.46 in^4	$A_1 \cdot y_1^2$ = 67.38 in^4
Tension steel	A_2 =7.15 in^2	y_2 = – 6.68 in	I_2 = 0.00	$A_2 . y_2^2$ = 319.00 in^4

$I_{cr} = (I_1 + A_1 \times y_1^2) + (I_2 + A_2 \times y_2^2)$

$= (22.46 + 33.86 \times 1.41^2) + (0 + 7.15 \times -6.68^2) = 408.84$ in^4

$$I_e = \left[\left(\frac{M_{cr}}{M_a}\right)^3 I_{g\,min} + \left[1 - \left(\frac{M_{cr}}{M_a}\right)^3\right] I_{cr}\right]$$

$$= \left[\left(\frac{30.01}{34}\right)^3 2197 + \left[1 - \left(\frac{30.01}{34}\right)^3\right] 408.84\right] = 1639.25 \text{ in}^4$$

I_{use} = if($I_e \le I_{gmin}$, I_e, I_{gmin}) = 1639.25 in^4

$$\Delta_{Load} = \frac{P_{service} \times S_{ext}^3 \, 12 \text{ in}}{3 \times E_c \times I_{use}} = \frac{7.76 \times 32.33^3 \; 12 \text{ in}}{3 \times 3{,}834{,}253 \times 1639.25} = 0.013904 \text{ in}$$

Deflection of the bearing should be considered under live load compression and long term creep.

$\Delta_{bearing}$ = 0.0 in

The deflection is limited to one half the ½ in. thickness of the expanded rubber joint filler to be placed between the deck extension and the top of the backwall. Should deflection be more than 0.25 in., then the rubber joint filler thickness needs to be increased to ¾ in. thick.

Δ total = Δ Load + Δ bearing = 0.013904+ 0.0 =0.013904 in

Δ total ≤ .25 in, Therefore deflection OK

WING HAUNCH DESIGN:

Determine reaction at acute corner and wing haunch due to skew effect:

See lateral force derivation in File No. 17.06-23 thru 25.

$$R_p = \frac{\left[q_p(W_{Bridge})\tan(\theta_A)\right]}{\left[1+\left(\frac{w_{Bridge}}{L_{Bridge}}\right)\tan(\theta_A)\right]12\,\text{in}} = \frac{\left[1.47(43.33\tan(30)\right]}{\left[1+\left(\frac{43.33}{250}\right)\tan(30)\right]12\,\text{in}}$$

R_p = 33.44 k — Buttress force required to resist rotation of superstructure

Extend the wing haunch perpendicular to the edge of the deck slab sufficiently to handle R_p = 33.44 k. Width of haunch design is 13.88 inches, thus b_{haunch} = 13.88 in.

Determine allowable shear stress carried by concrete in wing haunch at the deck slab Extension:

$V_{uhaunch} = \gamma_{EH} \times \eta\,(R_p)$ =1.35 x 1.0(33.89) = 45.75 k

$H_{haunch} = D_{slabedge}$ = 13.00 in

b_{haunch} = 13.88 in

$y_{haunch} = 0.5\text{ in} + \frac{H_{haunch}}{2} = 0.5\text{ in} + \frac{13.0}{2} = 7.00\text{ in}$ — Lever arm for R_p

$M_{EHhaunch} = R_p \times y_{haunch}$ = 33.44 x 7/12 = 19.50 k-ft

$M_{uhaunch} = y_{EH} \times \eta \times M_{EHhaunch}$ = 1.35 x 1.0 x 19.5 = 26.33 k-ft

$M_{haunchservice} = y_{Ehs} \times \eta \times M_{EHhaunch}$ = 1.0 x 1.0 x 19.5 = 19.50 k-ft

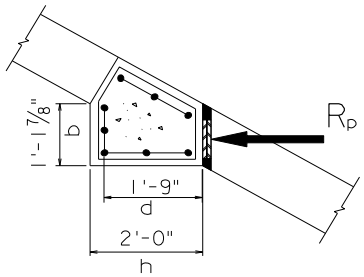

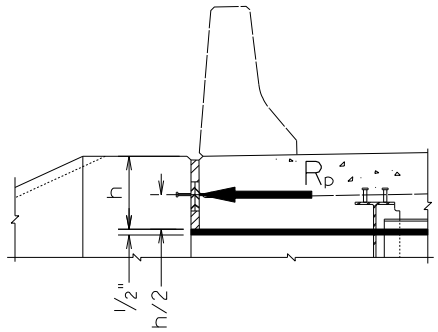

Use General Procedure for determination of shear resistance. This example conservatively assumes that the minimum amount of shear reinforcement is not provided (AASHTO 5.8.2.5). If minimum amount shear reinforcement is provided, check AASHTO 5.8.3.4.2 for modifications to the following procedure.

Try (2) #4 stirrups $A_{shaunch} = 2(A_{4bar}) = 0.40\ in^2$

$d_v = 21$ in

$s_x = d_v - 1$ in $= 21 - 1$ in $= 20.00$ in — Assume 2" compression block (conservative)

$a_g = 1.5$ in — Maximum aggregate size

$$s_{xe} = s_x \times \frac{1.38}{a_g\left(\frac{1}{in}\right) + 0.63}$$

Crack spacing AASHTO LRFD 5.8.3.4.2-5

Crack spacing
AASHTO LRFD 5.8.3.4.2-5

$$= 20 \times \frac{1.38}{1.5\left(\frac{1}{in}\right) + 0.63} = 12.96 \text{ in}$$

$$\varepsilon_x = \frac{\left[\frac{\max(M_{uhaunch}, V_{uhaunch} \cdot d_v)}{(d_v)} + V_{uhaunch}\right]}{E_s \times A_{shaunch}}$$

Longitudinal Strain
AASHTO LRFD 5.8.3.4.2

$$= \frac{\left[\frac{\max(26.33, 45.75 \times 20)}{(20)} + 45.75\right]}{29{,}000 \times 0.40} = 0.007783$$

$$\beta = \frac{4.8}{(1+750\cdot\varepsilon x)} \times \frac{51}{\left[s_{xe}\left(\frac{1}{in}\right)+39\right]}$$ AASHTO LRFD 5.8.3.4.2-2

$$= \frac{4.8}{(1+750\times 0.007783} \times \frac{51}{\left[12.96\left(\frac{1}{in}\right)+39\right]} = 0.69$$

$\theta_v = (29 + 3500 \times \varepsilon_x)$ AASHTO LRFD 5.8.3.4.2-3

$= (29 + 3500 \times 0.007783) = 56.24$ deg

$V_c = 0.0316 \times \beta \sqrt{(f'_c\ (ksi)}\ (d_v)\ b_{haunch}$ AASHTO LRFD 5.8.3.3-3

$= 0.0316 \times 0.69 \sqrt{(4}\ (21)\ 13.88 = 12.69$ k

$V_{uhaunch} = 45.14$ k $> 0.5 \times \Phi_{vc}\,(V_c + V_p) = 0.5 \times 0.9\,(12.69) = 5.71$ k AASHTO LRFD 5.8.2.4-1

Therefore, shear reinforcement required.

Check capacity with shear reinforcement (#4 stirrups spaced at 8" oc)

$s_v = 8$ in $A_{vhaunch} = 2\,A_{4bar} = 0.40\ in^2$

$$Vs = \frac{A_{vhaunch} \times F_y \times d_v \times \cot(\theta_v)}{s_v} = 42.11 \text{ k}$$ AASHTO LRFD 5.8.3.3-4

$V_c + V_s + V_p = 54.81$ k AASHTO LRFD 5.8.3.3-1

$b_v = d_v = 1.75$ ft

$$d_v = \frac{M_n}{A_s f_y} = \frac{41.5 \times 12}{0.4 \times 60} = 20.74 \text{ in.}$$

$0.25 f'_c b_v d_v + V_p = 0.25 \times 4 \times (1.75 \times 12) \times 20.74 + 0 = 435.5$ kips AASHTO LRFD 5.8.3.3-2

V_n = min. of AASHTO LRFD 5.8.3.3-1 and 5.8.3.3-2 = 54.81 kips

$\Phi_{vc} \times V_{ns} = 49.33$ k Factored Design Load

$\Phi_{vc} \times V_{ns} > V_{uhaunch}$, Therefore, OK

Shear reinforcement: #4 stirrup spaced at 8 in. Also refer to Wing Haunch Reinforcement Detail

Determine moment in wing haunch at deck slab:

$h_{haunch} = 13.00$ in

Lever arm for R_p

$y_{haunch} = 7.00$ in

$M_{uhaunch} = 26.33$k-ft

Design for flexure:

d = 21 in

Compute the total area of reinforcement required:

$$m = \frac{F_y}{0.85 \times f'_c} = \frac{60}{0.85 \times 4} = 17.65$$

$$R_u = \frac{M_{uhaunch}}{\varphi_{fc} \times b_{haunch} \times d^2} = \frac{26.33}{0.9 \times 13.88 \times 21^2} = 57.36 \text{ psi}$$

$$\rho = \frac{1}{m}\left[1-\sqrt{1-\left(2 \times m \times \frac{R_u}{F_y}\right)}\right] = \frac{1}{17.65}\left[1-\sqrt{1-\left(2 \times 17.65 \times \frac{57.36}{60}\right)}\right] = 0.0010$$

$A_{stotreq} = b_{haunch} \times \rho \times d = 0.28 \text{ in}^2$

Try (2) #4 bars (minimum reinforcement per VDOT standards)

$A_{shaunch} = 2 \times A_{4bar} = 0.40 \text{ in}^2$ $\qquad$ $A_{shaunch} \geq A_{stotreq}$ $\qquad$ OK

$c_{haunch} = 2.75$ in $\qquad$ Distance from the face of concrete to center of reinforcement

$S_{bar} = b_{haunch} - 2 \times c_{haunch}$
$= 13.88 - 2 \times 2.75 = 8.38$ in

$$a_{haunch} = \frac{A_{shaunch} \times F_y}{0.85 \times f'_c \times b_{haunch}}$$ $\qquad$ Depth of compression block

$$= \frac{0.40 \times 60}{0.85 \times 4 \times 13.88} = 0.51 \text{ in}$$ $\qquad$ AASHTO LRFD 5.7.3.2.1

$C_{haunch} = 0.85 \times f'c\ (a_{haunch} \times b_{haunch})$ $\qquad$ Concrete force
$= 0.85 \times 4\ (0.51 \times 13.88) = 24.00$ k

$$\Phi M_{nhaunch} = \Phi_{fc} \times C_{haunch}\left(d - \frac{a_{haunch}}{2}\right)$$ $\qquad$ Moment resistance

$$= 0.9 \times 24.0\left(21 - \frac{0.51}{2}\right) = 37.34 \text{ k-ft}$$

$M_{uhaunch} = 26.33$ k-ft $\qquad$ Moment demand

$\Phi M_{nhaunch} > M_{uhaunch}$, Therefore OK

Check control of cracking by distribution of reinforcement: $\qquad$ AASHTO LRFD 5.7.3.4

$$m = \frac{n_d \times A_{shaunch}}{b_{haunch} \times d} = \frac{8 \times 0.40}{13.88 \times 21} = 0.0110$$

$$K = \sqrt{m^2 + 2m} - m = \sqrt{0.0110^2 + 2 \times 0.0110} - 0.0110 = 0.1376$$

$$j = 1 - \frac{K}{3} = 1 - \frac{0.1376}{3} = 0.9541$$

$M_{haunchservice} = 19.50$ k·ft

$$f_{ss} = \frac{M_{haunchservice}}{j \times d \times A_{shaunch}} = \frac{19.50}{0.9541 \times 21 \times 0.40} = 29.20 \text{ in·ksi}$$

$d_c = 3.5$ in

$\gamma_e = 1.0$

$$\beta_1 = 1 + \frac{d_c}{0.7 \cdot (d - d_c)} = 1 + \frac{3.5}{0.7 \cdot (21 - 3.5)} = 1.2857$$

$$S_{max} = \frac{700 \cdot \gamma_e}{\beta_1 \cdot f_{ss}} - 2 \times d_c = \frac{700 \times 1.0}{1.2857 \times 29.2} - 2 \times 3.5 = 11.65 \text{ in}$$

$S_{bar} = 8.38$ in

$S_{bar} \leq S_{max}$ Therefore, bar spacing OK

Check minimum reinforcement requirement:

$f_r = 0.74$ ksi — Modulus of rupture AASHTO 5.7.3.3.2

$$I_{ghaunch} = \frac{b_{haunch} \times d_v^3}{12}$$

$$= \frac{13.88 \times 21^3}{12} = 10711.89 \text{ in}^4$$

Gross moment of inertia AASHTO LRFD 5.4.2.6

$$Y_{shaunch} = \frac{d_v}{2} = \frac{21}{2} = 10.50 \text{ in}$$

$$M_{crhaunch} = \frac{f_r \times I_{ghaunch}}{y_{shaunch}}$$

$$= \frac{0.74 \times 10711.89}{10.5} = 62.91 \text{ k·ft}$$

Minimum reinforcement is based on the requirement that $\Phi_b \times M_n$ is greater than the lesser of $1.2 \times M_{crWh}$ and $1.33 \times M_u$

$\Phi M_{nhaunch} = 55.67$ k-ft — Nominal moment

$1.33\ (M_{uhaunch}) = 1.33\ (26.33) = 35.02$ k-ft — 1.33 times the factored design load

$1.2 \times M_{crhaunch} = 1.2 \times 62.91 = 75.49$ k-ft — 1.2 times the cracking moment

$\Phi M_{nhaunch} > \min(1.33 \times M_{uhaunch}, 1.2 \times M_{crhaunch})$ therefore OK

Provide (2) #4 bars, also refer to Wing Haunch Reinforcement Detail

Note: The designer should also check AASHTO 5.10.3 – Spacing of Reinforcement and AASHTO 5.10.8 – Shrinkage and Temperature Reinforcement.

DESIGN OF RUB PLATES:

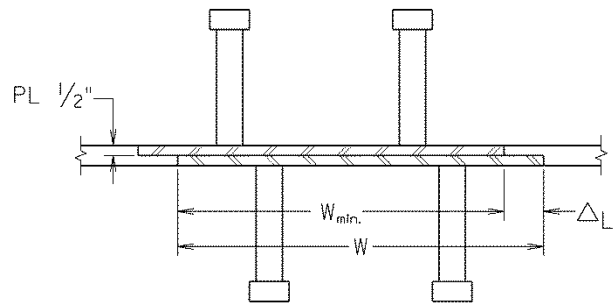

RUB PLATE DETAIL

Determine the dimensions of the rub plate:

$\Delta_{LRUB} = \gamma_T \alpha (t_{max} - t_{min}) L_{Thermal}$
$= 1.2 \times 6.5 \times 10^{-6} (120 - 0) (125 \times 12)$

$\Delta_{LRUB} = 1.40$ in

Minimum plate size is 8 in. (W) x 6 in. (H) x $^1/_2$ in. thick

$H_{rpmax} = D_{slabedge} - 3$ in = 10.00 in
= 13 – 3 in = 10.00 in

Height of rub plates
See note 6 in File No. 17.09-5

$H_{rp} = 6$ in

$F_g = 2000$ psi

Maximum galling stress for ASTM A276 Type 316 steel (rub plates)

$f_g = \frac{F_g}{2} = \frac{2000}{2} = 1000.00$ psi

Assuming factor of safety of 2 for allowable galling stress

$w_{min} = \frac{R_p}{(h_{rp} \times f_g)} = \frac{33.44}{(6 \times 2000)} = 5.57$ in

Ensure the minimum rub plate width is maintained during extremes of the temperature cycles.

$w_{RP} = w_{min} + \Delta_{LRUB} = 5.57 + 1.40 = 6.97$ in

Use minimum size, 8 in. (W) x 6 in. (H) x ½ in. thick

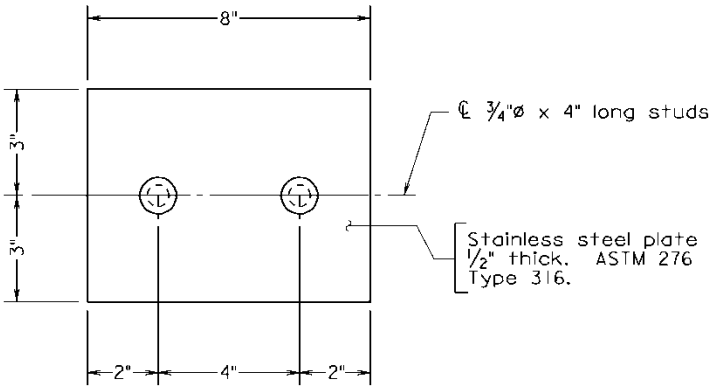

RUB PLATE DETAIL
4 required – 2 at each acute corner

Note: The backwall design should account for the friction force when analyzing the force effects on the backwall.

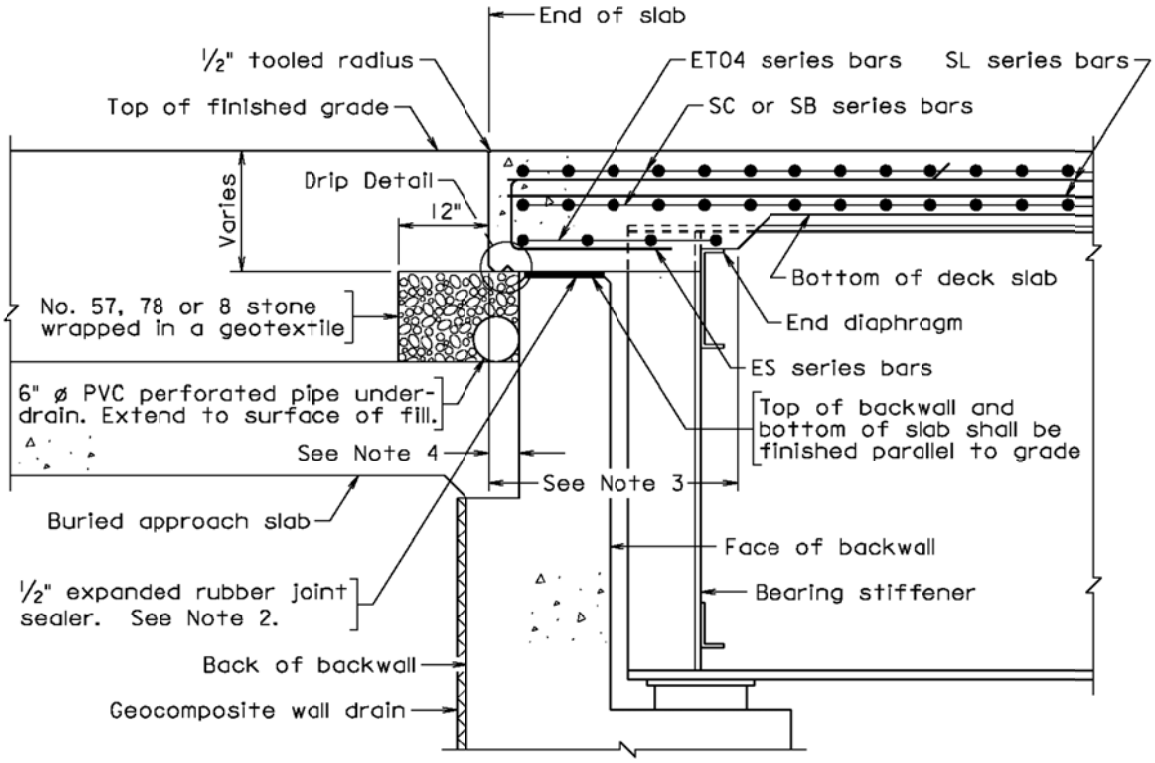

SLAB END DETAIL - STEEL MEMBERS W/ BURIED APPROACH SLAB

The above detail shall be used where an approach slab and deck extension on steel members are deemed appropriate. For additional details of drainage system, see File Nos. 17.12-6 and -7.

Items in blocks are for designer's information only and are not to be placed on the plans.

1. Section is taken normal to the abutment face. Section is for slab details and shall be shown on the deck slab details sheets. Substructure details shall be shown on the abutment sheets.

2. The ½" expanded rubber joint filler shall extend the full length of the deck slab extension.

3. This dimension shall be determined by the designer and shown on the plans.

4. Provide a minimum 4" deck slab overhang.

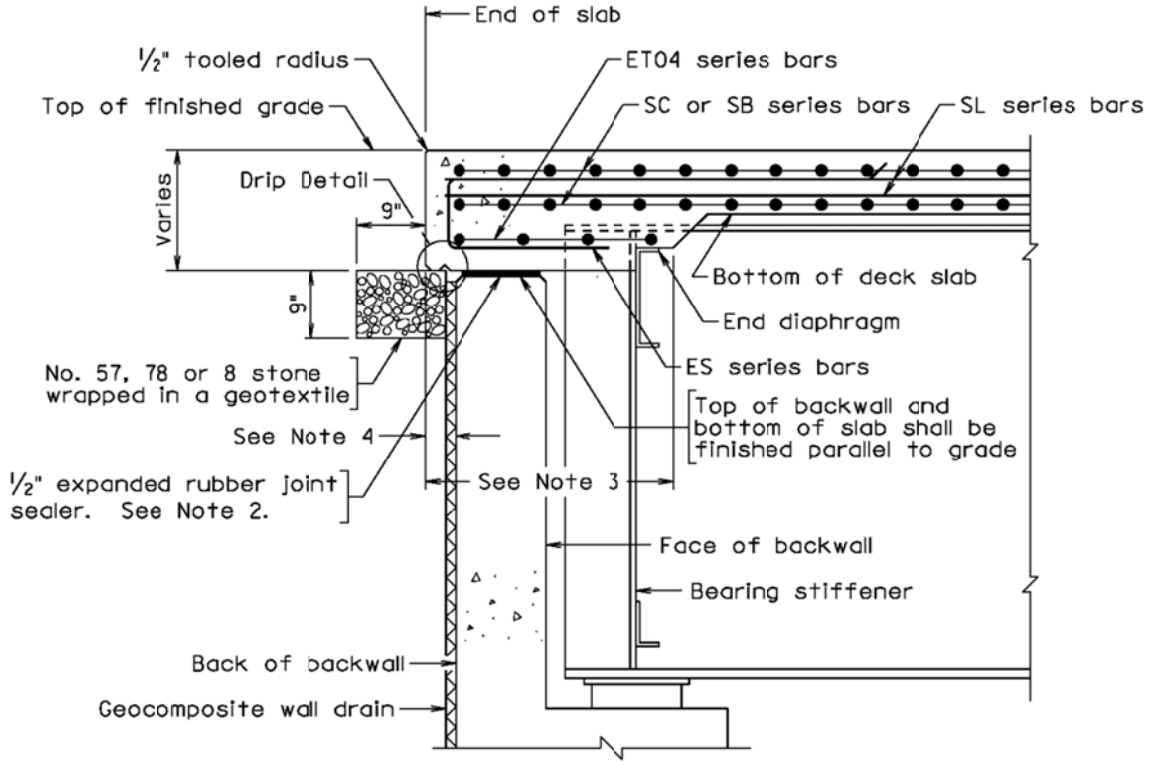

SLAB END DETAIL – STEEL MEMBERS W/O APPROACH SLAB

The above detail shall be used where a deck extension on steel members is deemed appropriate. For additional details of drainage system, see Section 17.12.

Items in blocks are for designer's information only and are not to be placed on the plans.

1. Section is taken normal to the abutment face. Section is for slab details and shall be shown on the deck slab details sheets. Substructure details shall be shown on the abutment sheets.

2. The ½" expanded rubber joint filler shall extend the full length of the deck slab extension.

3. This dimension shall be determined by the designer and shown on the plans.

4. Provide a minimum 4" deck slab overhang.

ABUTMENTS **DECK SLAB EXTENSIONS** **SLAB END DETAILS**	PART 2 DATE: 17Aug2016 SHEET 25 of 30 FILE NO. 17.08-25

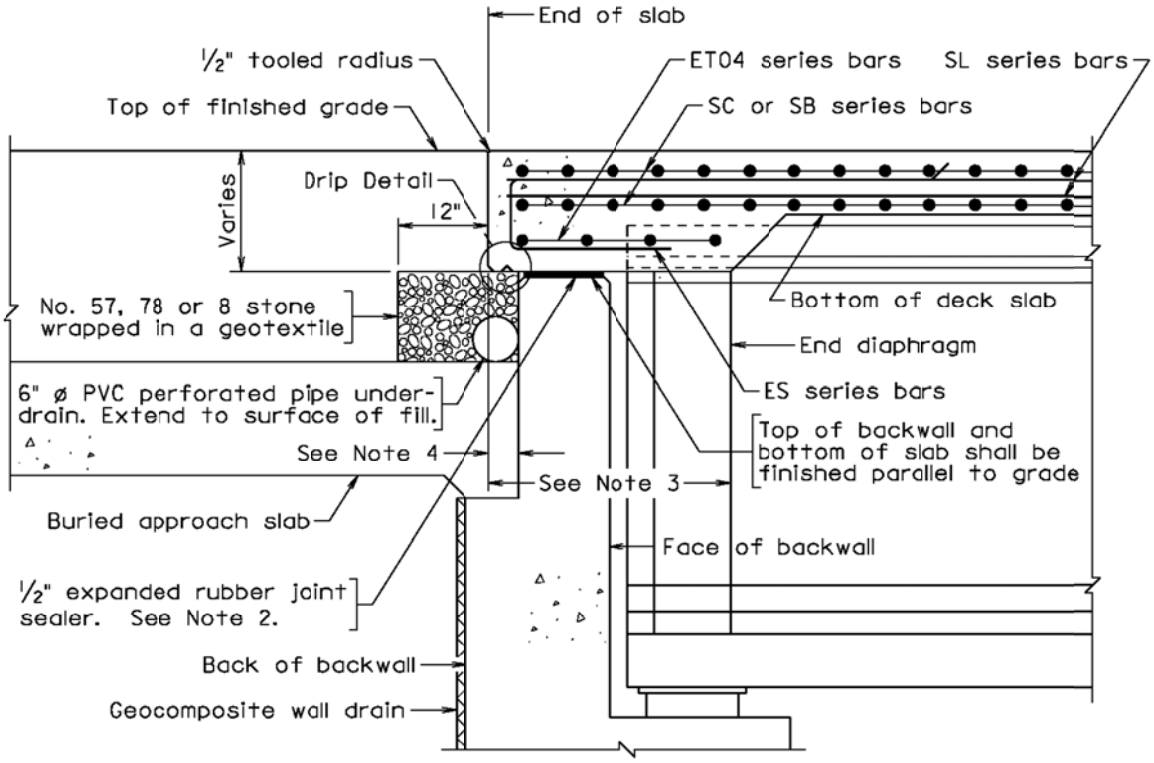

SLAB END DETAIL – PRESTRESSED MEMBERS
W/ BURIED APPROACH SLAB

The above detail shall be used where an approach slab and deck extension on prestressed concrete members are deemed appropriate. For additional details of drainage system, see File Nos. 17.12-6 and -7.

Items in blocks are for designer's information only and are not to be placed on the plans.

1. Section is taken normal to the abutment face. Section is for slab details and shall be shown on the deck slab details sheets. Substructure details shall be shown on the abutment sheets.

2. The ½" expanded rubber joint filler shall extend for the full length of the deck slab extension.

3. This dimension shall be determined by the designer and shown on the plans.

4. Provide a minimum 4" deck slab overhang.

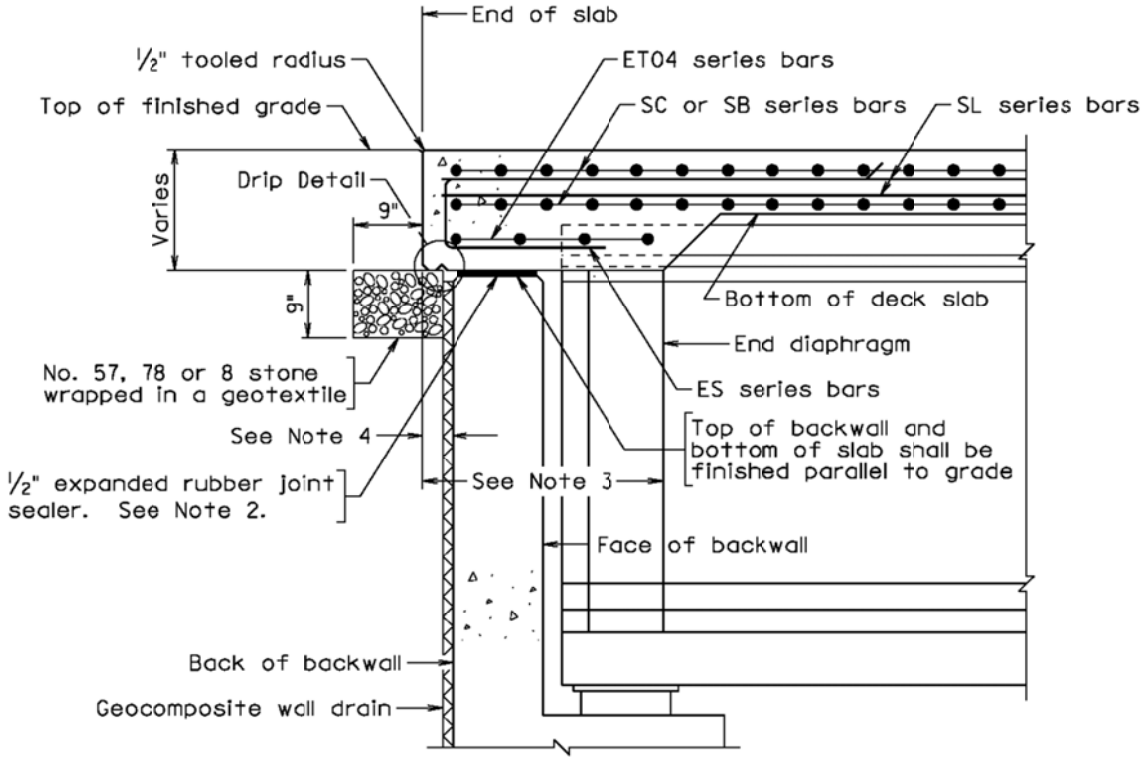

END OF SLAB DETAIL – PRESTRESSED MEMBERS W/O APPROACH SLAB

The above detail shall be used where a deck extension on prestressed concrete members is deemed appropriate. For additional details of drainage system, see Section 17.12.

Items in blocks are for designer's information only and are not to be placed on the plans.

1. Section is taken normal to the abutment face. Section is for slab details and shall be shown on the deck slab details sheets. Substructure details shall be shown on the abutment sheets.

2. The ½" expanded rubber joint filler shall extend the full length of the deck slab extension.

3. This dimension shall be determined by the designer and shown on the plans.

4. Provide a minimum 4" deck slab overhang.

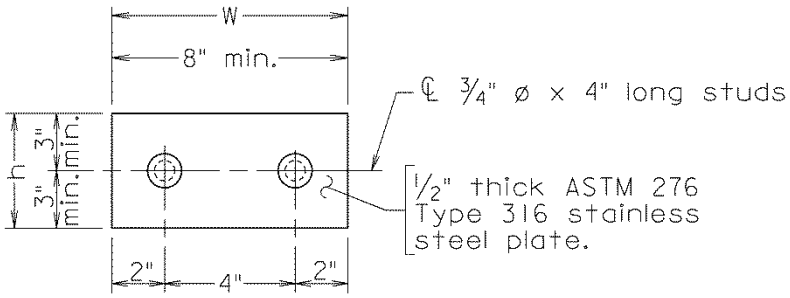

RUB PLATE DETAIL

Bridges on skews shall be provided with rub plates on the deck slab extensions. Rub plates are not required for bridges with skew = 0°.

The stainless steel plate shown above shall conform to the requirements of ASTM 276, Type 316.

Rub plates shall be designed to resist horizontal forces due to thermal induce passive earth pressures and to accommodate the travel due to thermal movements. For sample design calculations, see File Nos. 17.08-22 and -23.

Minimum size of rub plates shall be 8” (W) x 6” (H) x $^1/_2$”. H_{max} = depth of deck slab extension – 3” ($1^1/_2$” concrete cover top and bottom of plate). Spacing of shear studs shall not exceed 6”.

Rub plates shall be centered vertically on the depth of the deck slab extension and horizontally on the contact area of the deck slab extension and the wingwall haunch.

Add appropriate note on the plan sheet for estimated quantities for cost of rub plates. For steel beams/girders, include cost in structural steel. For concrete beams, include cost in abutment concrete (Class A3).

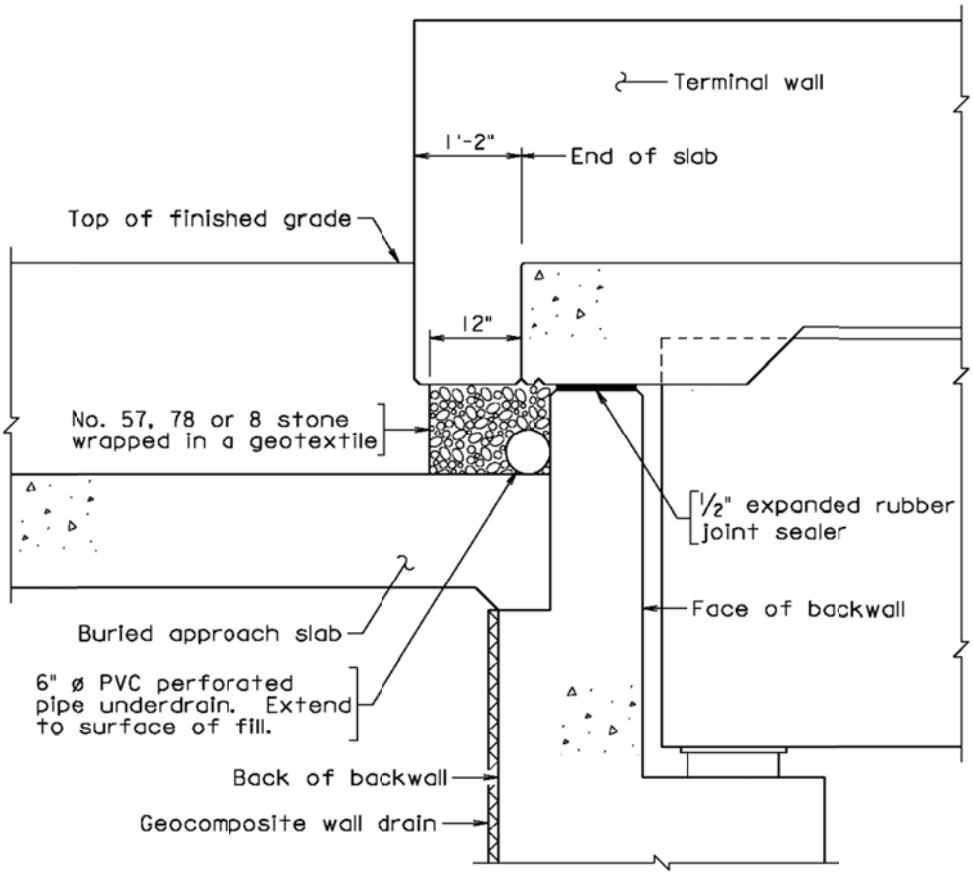

TERMINAL WALL DETAIL

Terminal wall for deck extension shall be extended beyond the end of slab as shown above.

Terminal walls for parapet/railings shall extend 1'-2" beyond the end of slab extension and shall be deepened to the depth of the deck slab extension as shown. The deepened section assists in limiting the amount of erosion at the end of the deck slab. Modify parapet/railing standard detail sheet to show details.

For example partial details of terminal wall, see File No. 17.08-30.

For additional details of drainage system, see File No. 17.12-6 and -7.

ABUTMENTS **DECK SLAB EXTENSIONS** **TERMINAL WALL DETAILS**	PART 2 DATE: 17Aug2016 SHEET 29 of 30 FILE NO. 17.08-29

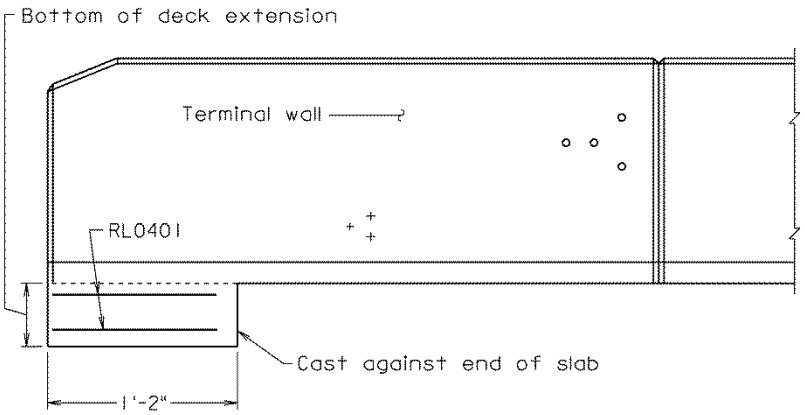

ELEVATION VIEW

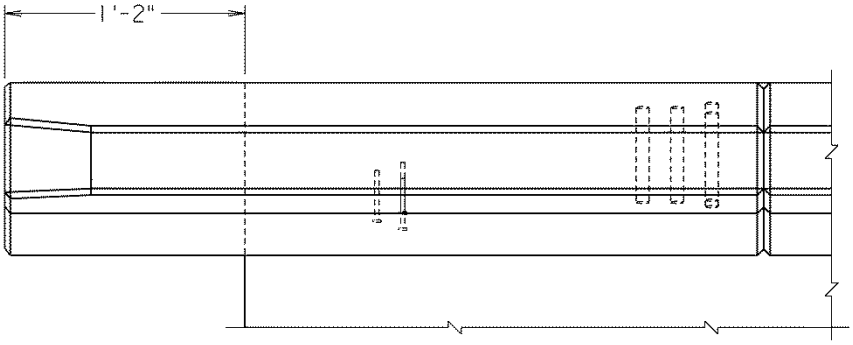

PART PLAN TYPICAL FOR STRAIGHT CROSSINGS

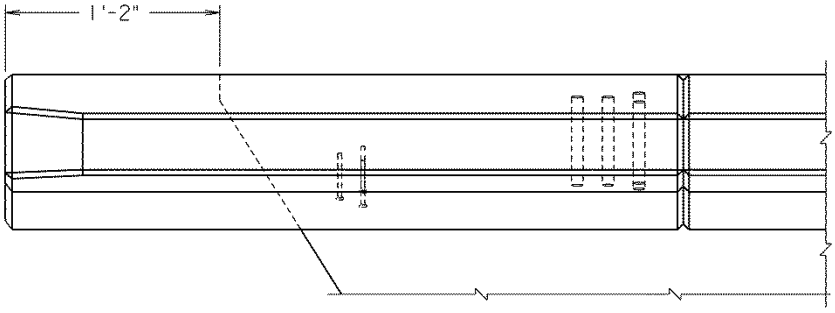

PART PLAN TYPICAL FOR SKEWED CROSSINGS

ABUTMENTS **DECK SLAB EXTENSIONS** **TERMINAL WALL DETAILS**	PART 2 DATE: 06Feb2012 SHEET 30 of 30 FILE NO. 17.08-30

GENERAL INFORMATION:

This section of the chapter establishes the general practices/requirements necessary for the completion of a plan detail sheets for a typical self/cantilever abutment with deck slab extensions for steel beams/girders. Included are sample plan detail sheets necessary for providing a complete bridge plan assembly. The sample plan detail sheets shown in this section are for a bridge that does not require a buried approach slab.

It is not the intent of the sample plan detail sheets contained in this section to show practices and requirements for the design of the deck slab extension for a bridge abutment. The plan detail sheets shown in this section are intended only to provide the designer with the necessary detail requirements for a complete bridge plan assembly.

For location of the shelf/cantilever abutment with deck slab extension plan detail sheets in the bridge plan assembly, see File No. 01-02-4.

The practices for the completion of interior sheets and standard detail sheets contained in Chapter 4 shall be adhered to.

This sheet is intentionally left blank

ABUTMENTS **DECK SLAB EXTENSIONS SAMPLE PLANS** **GENERAL INFORMATION**	PART 2 DATE: 06Feb2012 SHEET 2 of 7 FILE NO. 17.09-2

STATE	FEDERAL AID ROUTE	FEDERAL AID PROJECT	STATE ROUTE	STATE PROJECT	SHEET NO.
VA.	—	·	613	0613-007-246, B613	11

(16)

(14) Note:
See sheet 12 for Detail H and Detail J.

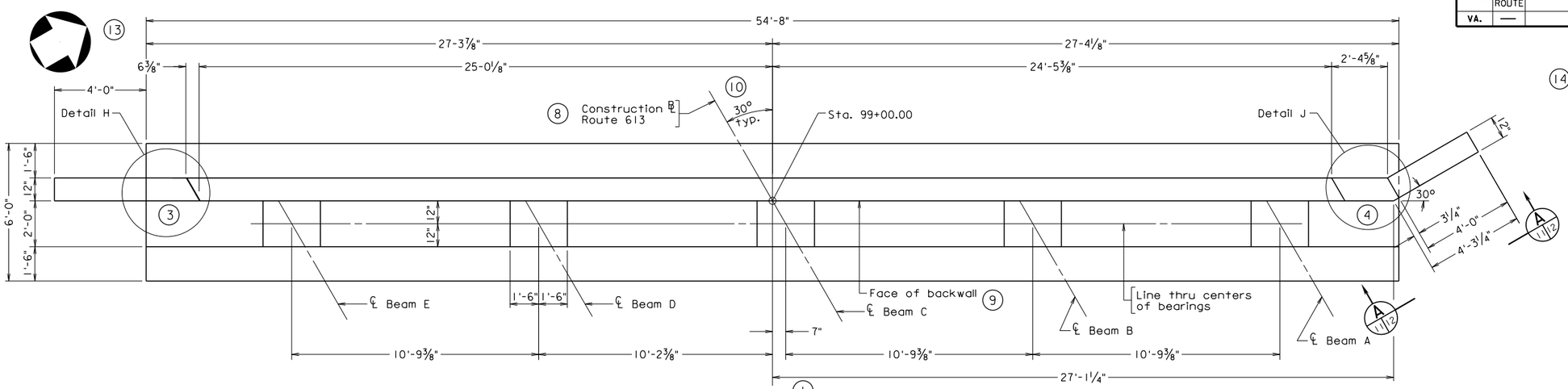

PLAN (1)

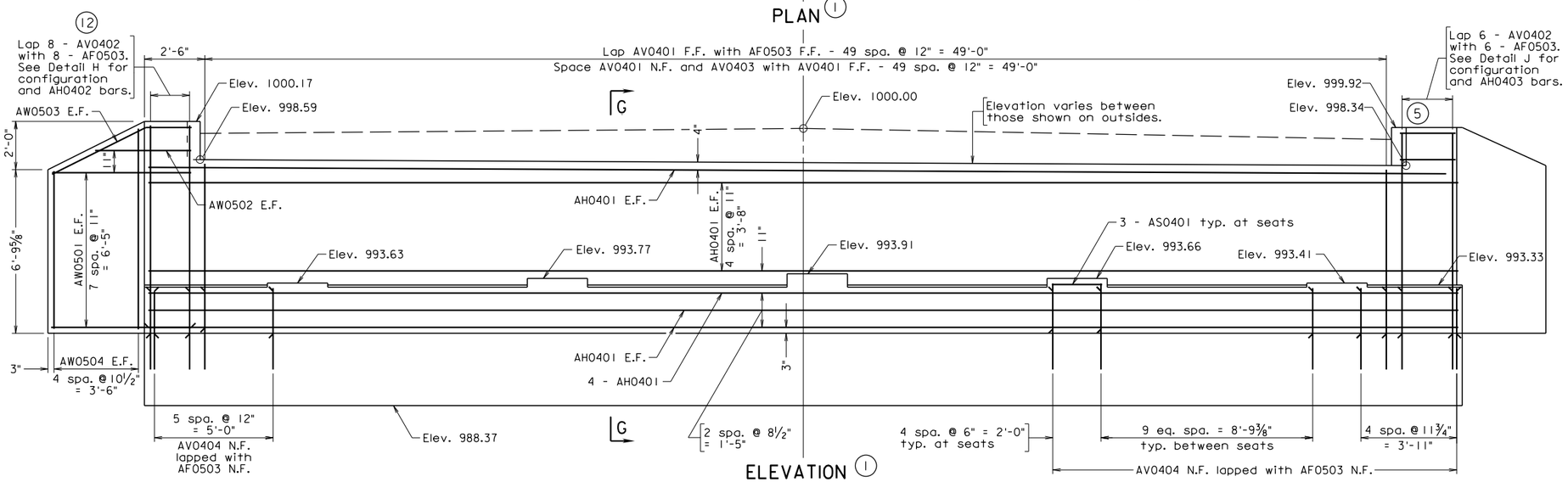

ELEVATION (1)
Piles not shown

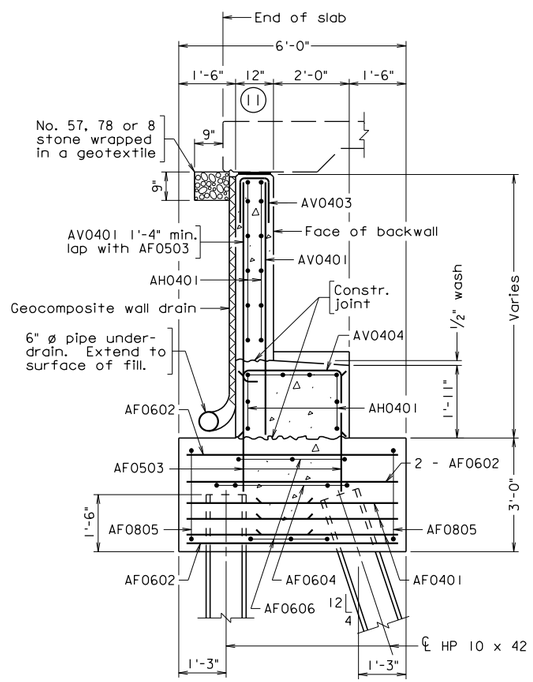

SECTION G-G (2)
Scale: ½" = 1'-0"

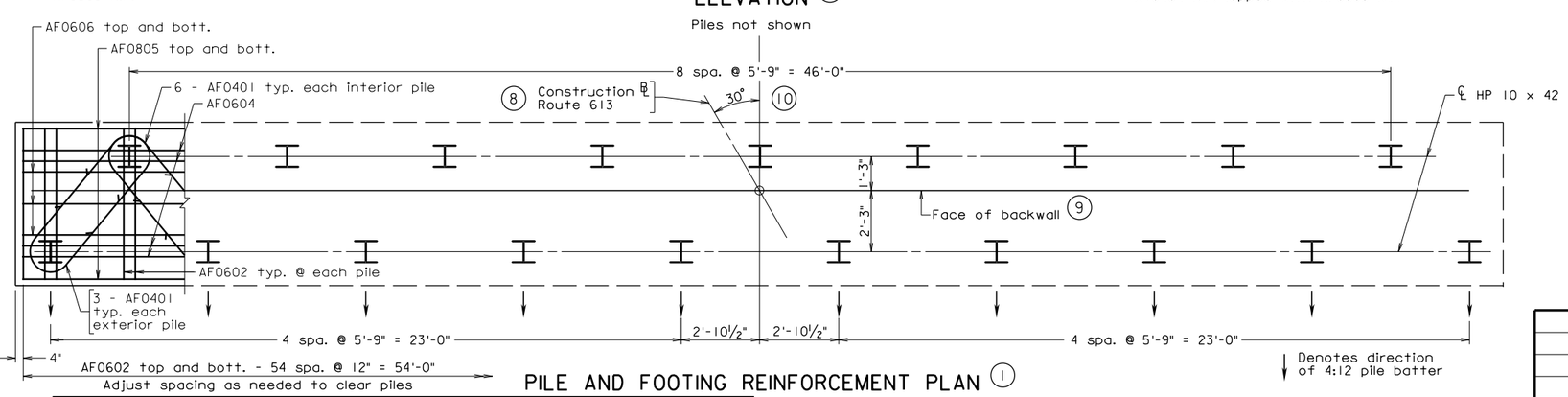

PILE AND FOOTING REINFORCEMENT PLAN (1)

ABUTMENTS
DECK SLAB EXTENSION SAMPLE PLANS
ABUTMENT DETAILS SHEET - STEEL BEAMS/GIRDERS

(17) 999-00_011.dgn

(18)

VDOT S&B DIVISION
RICHMOND, VA
STRUCTURAL ENGINEER

Scale: ⅜" = 1'-0" unless otherwise noted (1)

©2016, Commonwealth of Virginia

No.	Description	Date
	Revisions	

COMMONWEALTH OF VIRGINIA
DEPARTMENT OF TRANSPORTATION

STRUCTURE AND BRIDGE DIVISION

(15) ABUTMENT A

Designed: ABC
Drawn: DEF
Checked: GHI

Date: Aug. 2016

Plan: 999-

PART 2
DATE: 17Aug2016
SHEET 3 of 7
FILE NO. 17.09-3

STATE	FEDERAL AID ROUTE	FEDERAL AID PROJECT	STATE ROUTE	STATE PROJECT	SHEET NO.
VA.	—	·	613	0613-007-246, B613	12

(16)

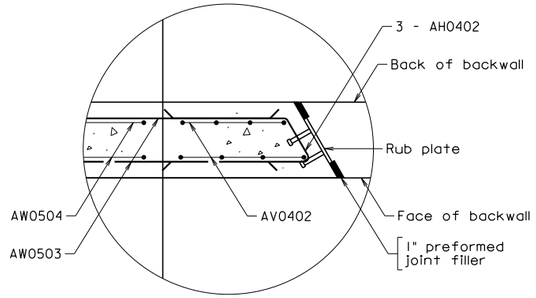

DETAIL H

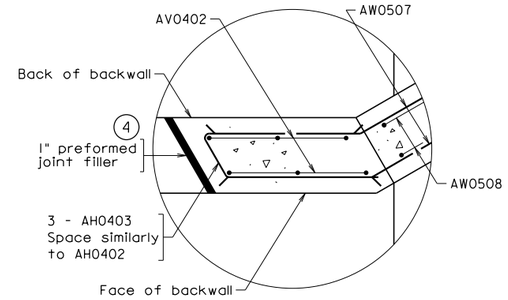

DETAIL J

Notes: (14)

(7) For extruded parapets, the opening between wing haunches, (at abutments) shall be changed in accordance with the requirements for the parapets, at the Contractor's expense.

The rub plates shall be centered horizontally on the wing haunch and centered vertically on the deck extension.

Cost of rub plates and joint filler shall be included in the price bid of substructure concrete.

For details of deck extension, see sheet 16.

The ½" expanded rubber joint filler shall extend the full length of the deck slab extension.

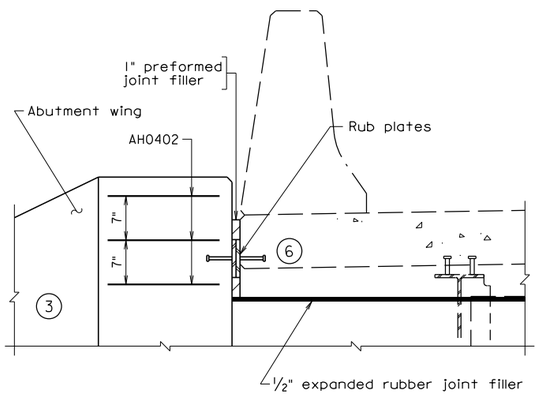

PART TRANSVERSE SECTION

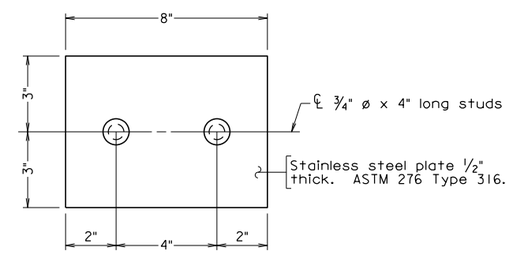

RUB PLATE DETAIL

4 Required - 2 each acute corner
Scale: 3" = 1'-0"

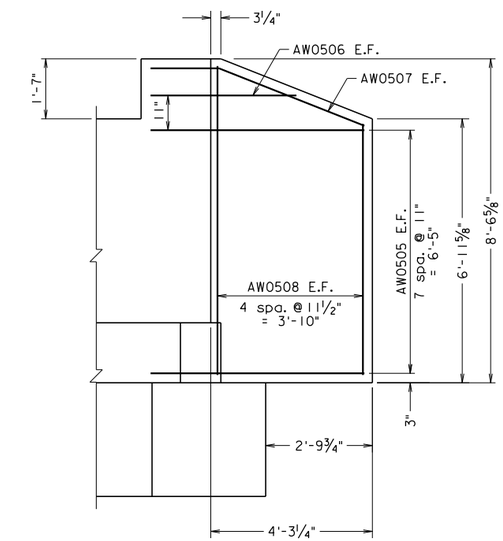

VIEW (A 11 12)

Scale: ½" = 1'-0"

999-00_012.dgn

(17)

(18)

VDOT S&B DIVISION
RICHMOND, VA
STRUCTURAL ENGINEER

ABUTMENTS
DECK SLAB EXTENSION SAMPLE PLANS
ABUTMENT DETAILS SHEET - STEEL BEAMS/GIRDERS

Scale: 1" = 1'-0", unless otherwise noted (2)

©2016, Commonwealth of Virginia

No.	Description	Date

Revisions

COMMONWEALTH OF VIRGINIA
DEPARTMENT OF TRANSPORTATION

STRUCTURE AND BRIDGE DIVISION

(15) ABUTMENT A DETAILS

Designed: ABC
Drawn: DEF
Checked: GHI

Date: Aug. 2016

Plan: 999-

PART 2
DATE: 17Aug2016
SHEET 4 of 7
FILE NO. 17.09-4

STATE	FEDERAL AID ROUTE	FEDERAL AID PROJECT	STATE ROUTE	STATE PROJECT	SHEET NO.
VA.	—	·	613	0613-007-246, B613	16

(16)

Notes: (14)

1. Section B-B is perpendicular to end of slab.
2. Varies from 1'-1" at outside edge of deck slab to 1'-6⅜" at centerline of deck slab.
3. For details of Abutment A, see sheets 11 and 12.
4. For details of Abutment B, see sheets 13 and 14.
5. The ½" expanded rubber joint filler shall extend the full length of the deck slab extension.
6. For details of spacing of SL series of reinforcing steel, see Transverse Section.
7. Forms for the deck slab extension shall be attached to the girders only; the forms shall not be attached to or blocked against the abutment stem or ground. The backwall and forms must be free to move in relation to the abument.

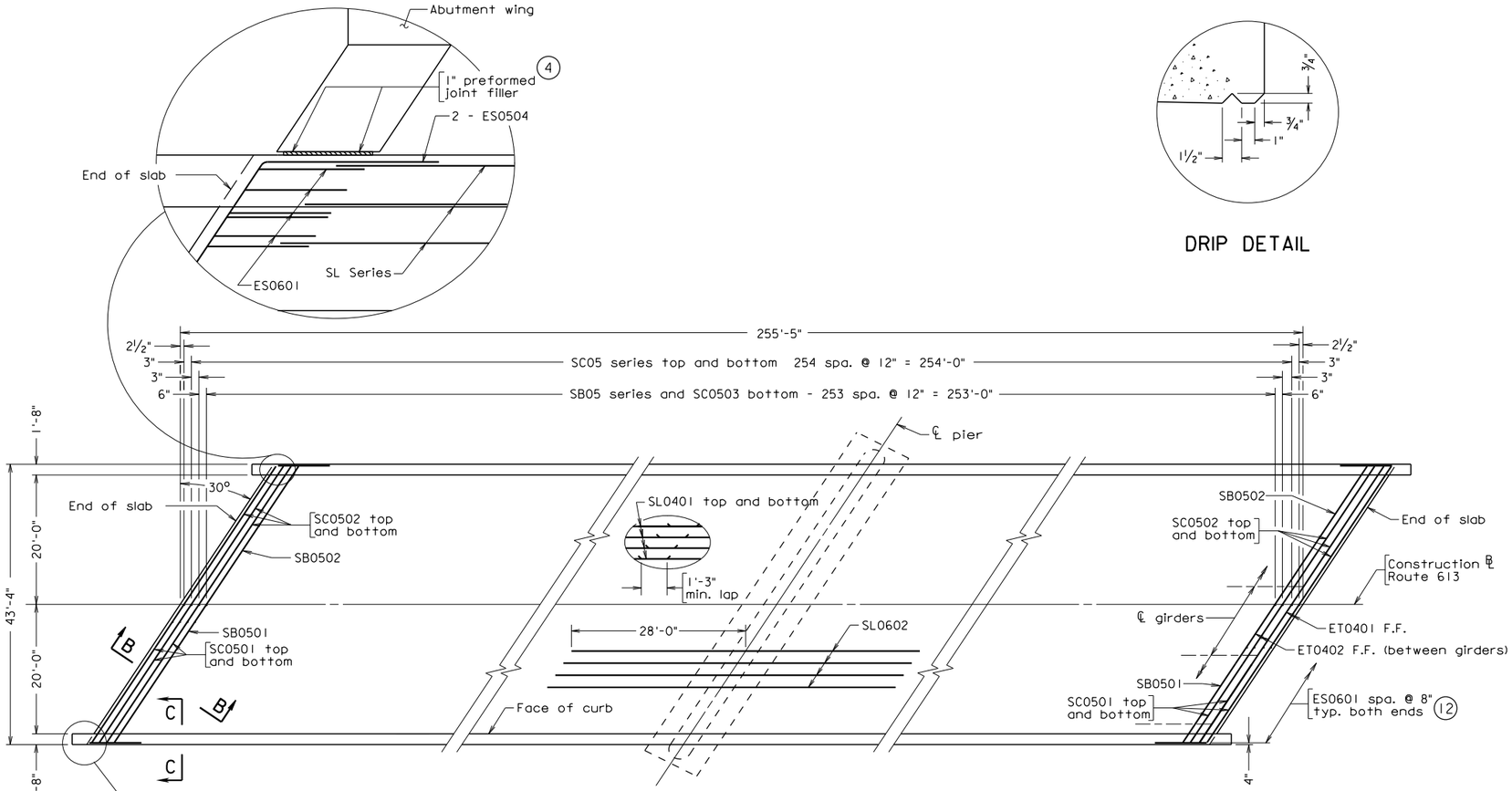

DECK SLAB PLAN

DRIP DETAIL

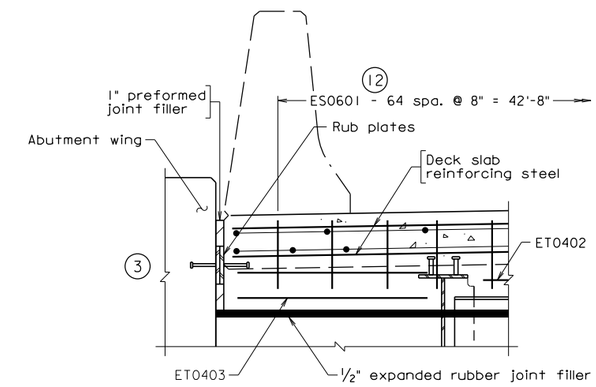

SECTION C-C
Scale: 1" = 1'-0"

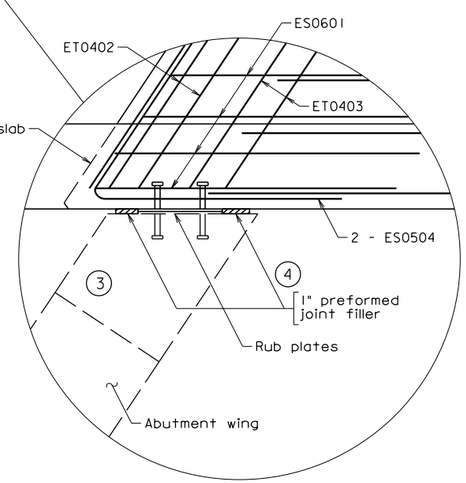

Note: Detail shown above for rub plate and corner reinforcement is typical to diagonally opposite corners at Abutment B.

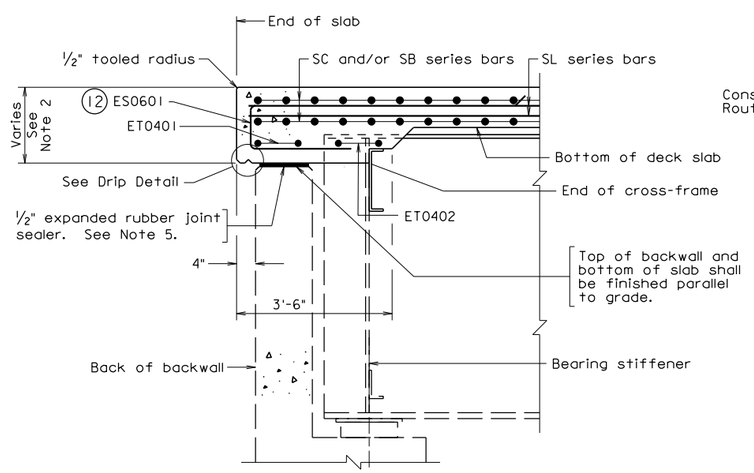

SECTION B-B
Scale: ¾" = 1'-0"

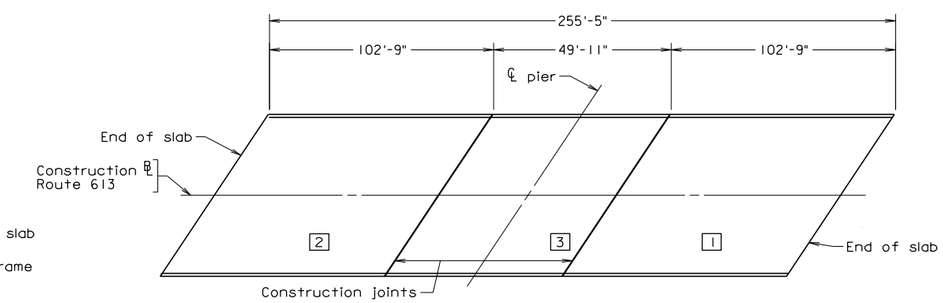

CONCRETE PLACEMENT SCHEDULE
Not to scale

CONCRETE PLACEMENT SCHEDULE NOTES

The numbers shown indicate the suggested order of deck of deck slab placement. Any request to change this sequence shall be submitted to the Engineer for approval prior to placement of any deck slab concrete.

ABUTMENTS
DECK SLAB EXTENSION SAMPLE PLANS
DECK SLAB DETAILS SHEET - STEEL BEAMS/GIRDERS

Scale: 3/32" = 1'-0", unless otherwise noted

©2016, Commonwealth of Virginia

No.	Description	Date
	Revisions	

COMMONWEALTH OF VIRGINIA
DEPARTMENT OF TRANSPORTATION
STRUCTURE AND BRIDGE DIVISION

(15) DECK SLAB PLAN

Designed: ABC
Drawn: DEF
Checked: GHI
Date: Aug. 2016
Plan: 999-
PART 2
DATE: 17Aug2016
SHEET 5 of 7
FILE NO. 17.09-5

(17) 999-00.016.dgn

(18)

VDOT S&B DIVISION
RICHMOND, VA
STRUCTURAL ENGINEER

CHECK LIST FOR SAMPLE PLANS:

1. Show full PLAN and ELEVATION views along with a PILE AND FOOTING REINFORCEMENT PLAN for an abutment with deck slab extensions complete with dimensions at a scale of $^{3}/_{8}$" = 1'-0". The elevation view should be projected down from the plan view.

2. Show SECTION (typical) view through abutment with deck slab extensions complete with dimensions at a scale of $^{1}/_{2}$" = 1'-0" unless scale is insufficient to show adequate details.

3. Wing haunch at acute corner shall be designed to resist the moment and shear induced by the force resulting from the passive earth pressure and the skew. Rub plates are only required at the acute corners of skewed bridges. Rub plates to be centered vertically and horizontally over contact area

4. Minimum thickness of the preformed joint filler between the backwall and the wing at the obtuse corner shall be 1". This may be increased due to thermal expansion in the transverse direction.

5. Extend wing 6" above finished grade. Not required for bridges without skew or where terminal wall is on the substructure.

6. Center the rub plates horizontally on the wing haunch and vertically on the deck extension. Top of rub plate to maintain $1^{1}/_{2}$" minimum clear from top of deck. Bottom of rub plate to maintain $1^{1}/_{2}$" minimum clear from bottom of deck extension. Preformed joint filler to extend as shown.

7. Delete this note if railings are used or slip forming of parapets is not allowed.

8. Label the location centerline/baseline as shown on the title sheet.

9. "Face of backwall" shall be used as the reference line for layout of abutments with deck slab extensions.

10. Label skew angle (if applicable).

11. The minimum width of backwall shall be 12". Bridges with approach slabs provide 7" seat (minimum width of backwall 1'-7") for approach slab. The approach slab seat (7") shall be provided on all deck slab extensions where future possibility may require the addition of an approach slab.

12. Maximum spacing is 12".

13. Show North Arrow above plan view.

14. Show Notes as required. For instructions on completing the notes, see File Nos. 04.03-1 and -2.

15. For instructions on completing the title block, see File No. 03.03.

16. For instructions on completing the project block, see File No. 04.01.

(17) For instructions on developing the CADD sheet number, see File Nos. 01.01-6 and 01.14-4.

(18) For instructions on completing the block for sealing, signing and dating this sheet, see File Nos. 01.16-1 thru -6.

(19) Provide the appropriate geotechnical design data in tabular format if not combined with pier data and provided near front of the plan assembly. For additional information, see File No. 17.02-3. The plan set for these sample sheets combined the design data near the front of the plan assembly (i.e., not shown on these sample sheets). See sample pier sheets and accompanying notes in File Nos. 15.03-1 thru -6 for examples of data tables on sheets.

(20) Where architectural treatment(s) is used, provide limits of architectural texture, coping widths, texture grid scales, relief, treatment position and other necessary details as applicable. See Chapter 5 of this manual for requirements, details and information for architectural treatment.

GENERAL INFORMATION:

This section of the chapter establishes the general practices/requirements necessary for the completion of a plan assembly for a typical Virginia Abutment substructure. Additional practices and requirements necessary for the design and detailing of the Virginia Abutment can be found in Sections 17.03 and 17.06 of this chapter. Included are sample plan detail sheets with check list for completing the bridge plan assembly.

The details shown in this section are intended only to provide the designer with the necessary detailing practices and requirements for the detailing of the Virginia Abutment. It is not the intent of the sample plan detail sheets contained in this section to show practices and requirements for the design of the abutment substructure of a bridge.

The details contained herein for the Virginia Abutment shall be used in situations where the length, skew, movement or geometry of the bridge preclude the use of the integral abutments and/or where there is a tooth expansion joint is required at the location. The designer shall check to make sure the total movement capacity of the tooth joint is not exceeded. For general requirements and guidance on when to select this type of abutment, see File Nos. 17.01-4, -5 and -7 thru -16.

These details combine the jointless concept with traditional concepts to provide a bridge that has a jointless superstructure and allows the use of uncoated weathering steel.

Due to the increase in abutment quantities, the use of these details should be based on initial cost and future maintenance cost analysis of the structure.

Information placed in blocks is for designer's information only and shall not to be placed on the abutment detail sheets.

For location of the abutment detail sheets in the bridge plan assembly, see File No. 01.02-4.

The practices for the completion of interior sheets and standard detail sheets contained in Chapter 4 shall be adhered to.

This sheet is intentionally left blank

STATE	FEDERAL AID ROUTE	FEDERAL AID PROJECT	STATE ROUTE	STATE PROJECT	SHEET NO.
VA.	—		94	0094-038-104, B601	5

(22)

(15) Notes:

See sheet 6 for abutment elevation view.

See sheets 6 and 7 for abutment reinforcement details.

See sheet 8 for wingwall dimensions and reinforcement details.

See sheet 9 for foundation plan and footing reinforcement details.

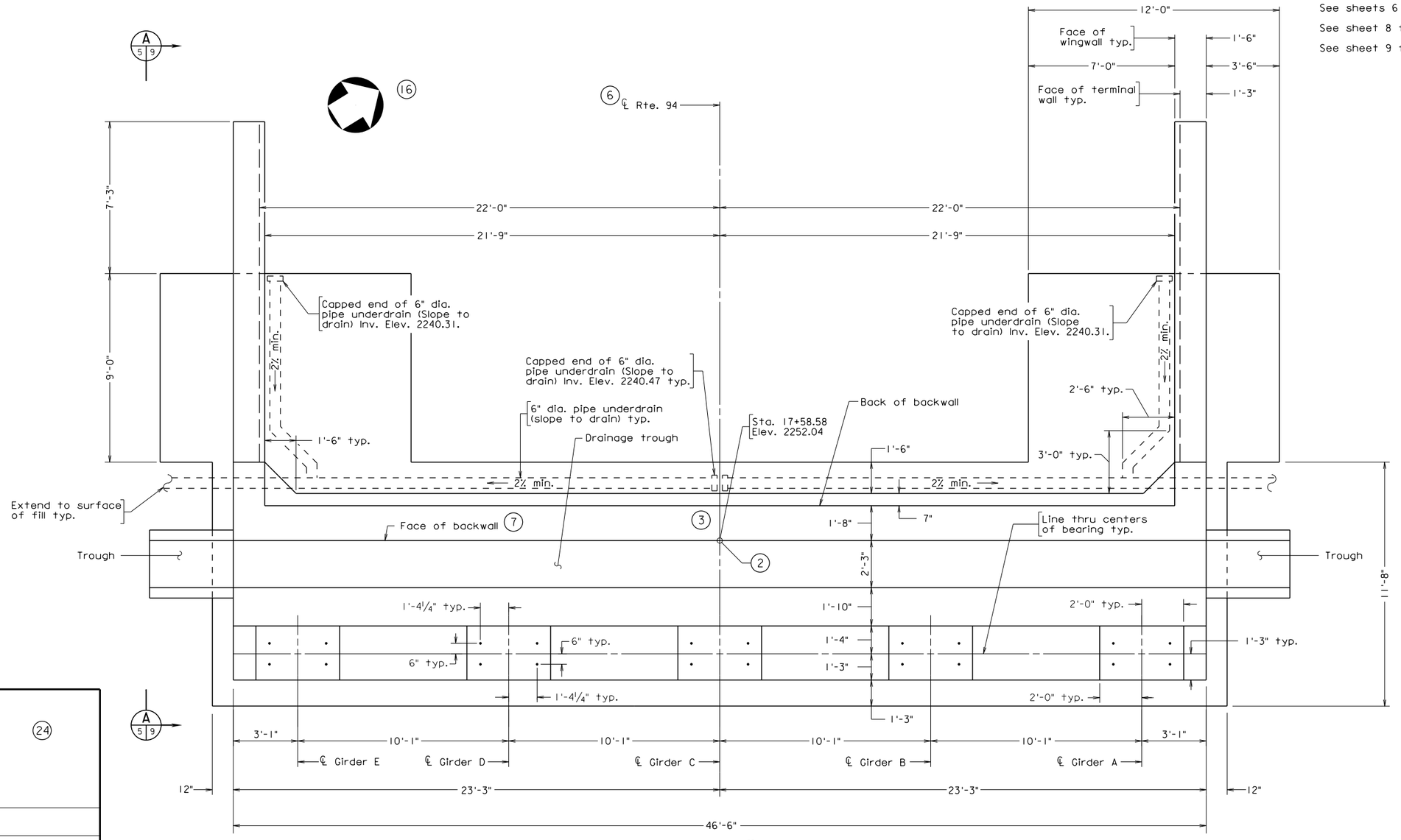

PLAN (1)

(23) 999-99.005.dgn

(24)

VDOT S&B DIVISION
RICHMOND, VA
STRUCTURAL ENGINEER

ABUTMENTS
VIRGINIA ABUTMENT SAMPLE PLANS
ABUTMENT DETAILS SHEET

Scale: ⅜" = 1'-0"

©2016, Commonwealth of Virginia

No.	Description	Date

Revisions

COMMONWEALTH OF VIRGINIA
DEPARTMENT OF TRANSPORTATION

STRUCTURE AND BRIDGE DIVISION

(21) ABUTMENT A
PLAN VIEW

Designed: ABC
Drawn: ABC
Checked: ABC

Date: May 2016

Plan: 999-

PART 2
DATE: 18May2016
SHEET 3 of 10
FILE NO. 17.10-3

STATE	FEDERAL AID ROUTE	FEDERAL AID PROJECT	STATE ROUTE	STATE PROJECT	SHEET NO.
VA.	—	-	94	0094-038-104, B601	6

22

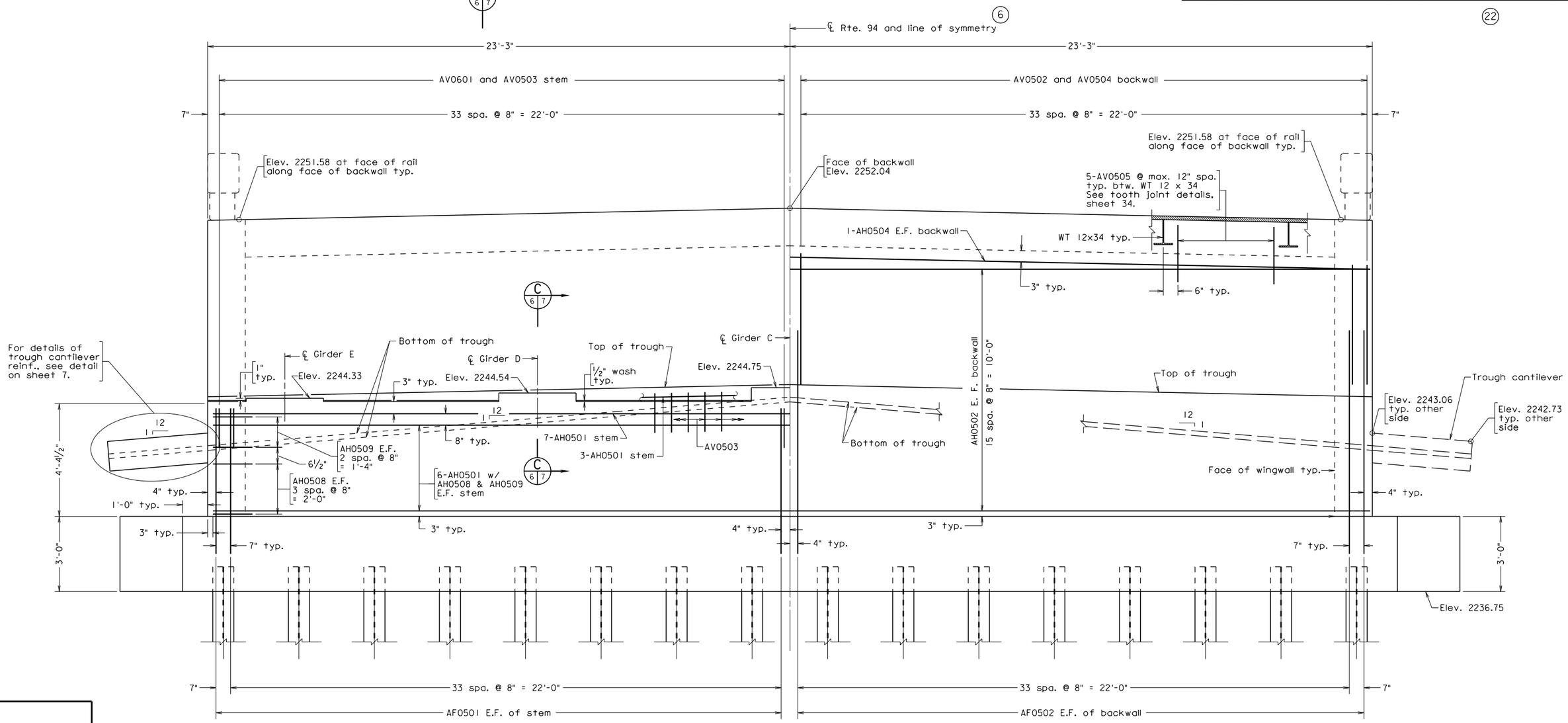

ELEVATION 1

15

Notes:

See sheet 34 for details of tooth joint anchor bolts cast within the paving notch.

See sheets 7 for additional abutment reinforcement details and, pedestal reinforcement details.

See sheet 8 for pile batter and pile spacing.

23

999-99_006.dgn

24

VDOT S&B DIVISION
RICHMOND, VA
STRUCTURAL ENGINEER

ABUTMENTS
VIRGINIA ABUTMENT SAMPLE PLANS
ABUTMENT DETAILS SHEET

Scale: 1/2" = 1'-0"

©2016, Commonwealth of Virginia

No.	Description	Date

Revisions

COMMONWEALTH OF VIRGINIA
DEPARTMENT OF TRANSPORTATION

STRUCTURE AND BRIDGE DIVISION

21

ABUTMENT A
ELEVATION VIEW

Designed: ABC
Drawn: ABC
Checked: ABC

Date: May 2016

Plan: 999-

PART 2
DATE: 18May2016
SHEET 4 of 10
FILE NO. 17.10-4

STATE	FEDERAL AID ROUTE	FEDERAL AID PROJECT	STATE ROUTE	STATE PROJECT	SHEET NO.
VA.	—		94	0094-038-104, B601	7

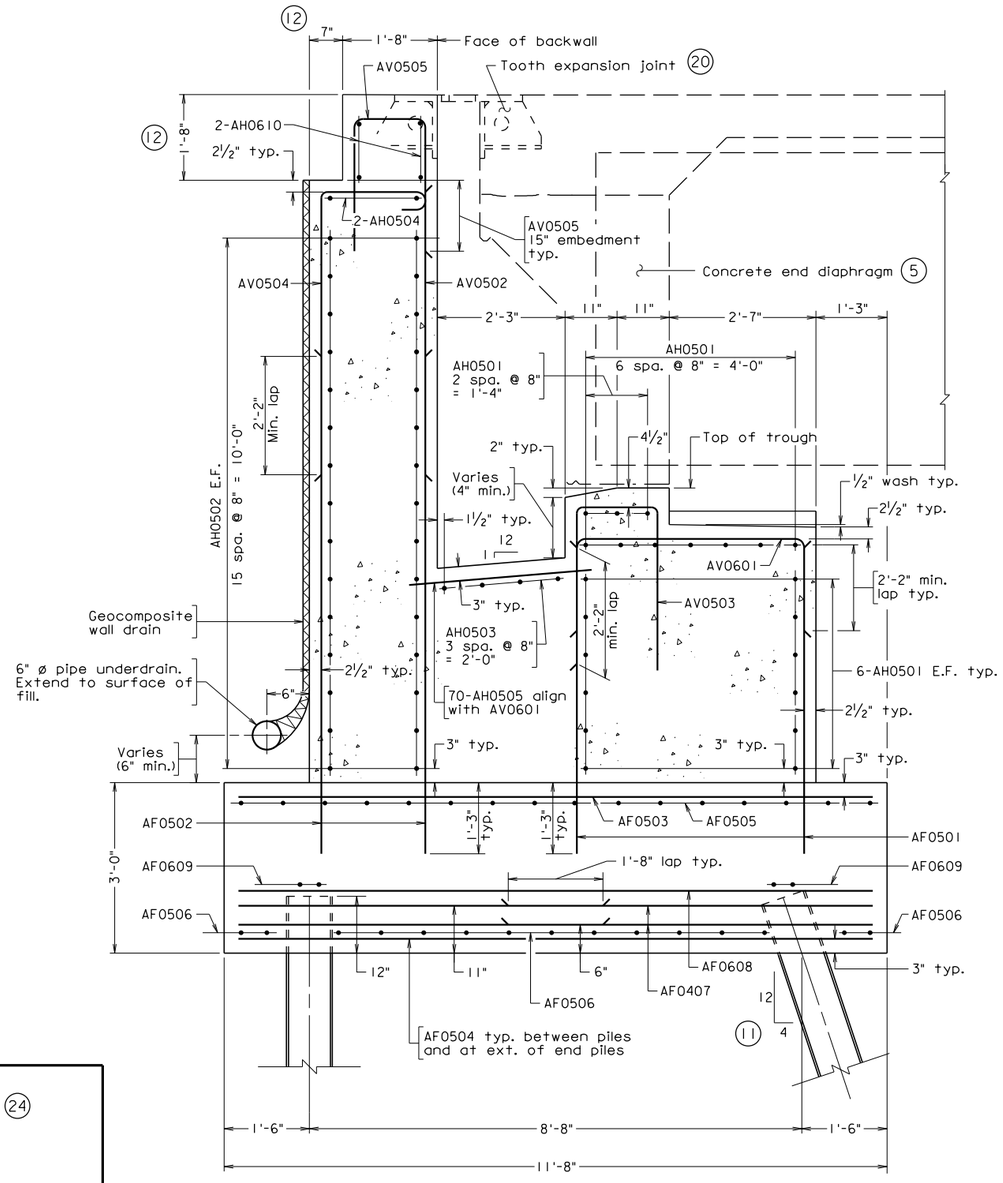

SECTION B/6 7 (4)

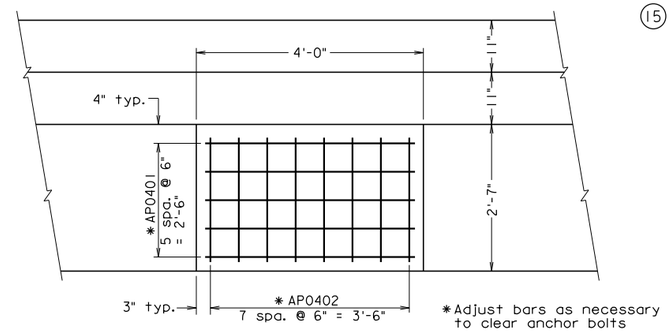

TYPICAL SEAT/PAD REINFORCEMENT DETAIL

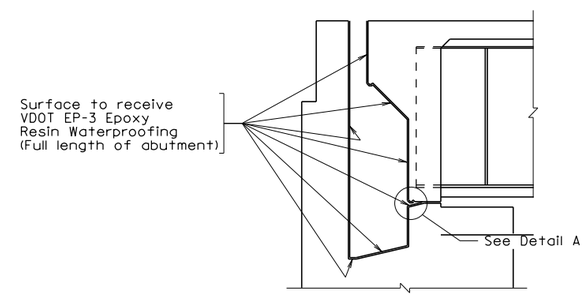

TROUGH WATERPROOFING DETAIL (19)
Not to scale

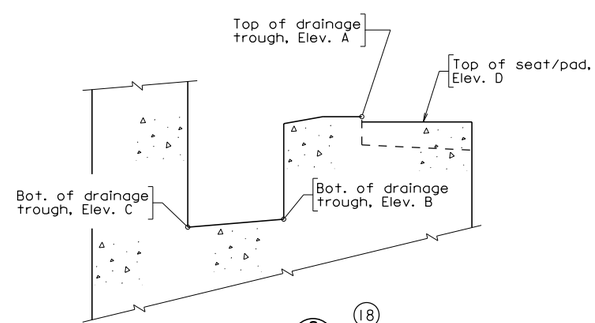

SECTION C/6 7 (18)

See table for elevations

DRAINAGE TROUGH ELEVATIONS				
Girder Line	Elev. A	Elev. B	Elev. C	Elev. D
℄ Girder A	2244.58	2242.82	2242.63	2244.33
℄ Girder B	2244.79	2243.66	2243.47	2244.54
℄ Girder C	2245.00	2244.50	2244.31	2244.75
℄ Girder D	2244.79	2243.66	2243.47	2244.54
℄ Girder E	2244.58	2242.82	2242.63	2244.33

All elevations are given through centerline of girder

(22)

(15) Notes:

For anchor bolt pattern and seat/pad dimensions, see sheet 5.

See sheet 34 for tooth joint details within the backwall.

Epoxy-Resin Type EP-3B shall be the prime or base coat. Type EP-3T shall be the finish coat. Epoxy-Resin materials shall comply with Section 243 of the Specifications.

Surface preparation, mixing, application and curing shall begin accordance with Section 416 of the Specifications as applicable to Type EP-3 Epoxy-Resin. The application of sand on the wet surface will not be required.

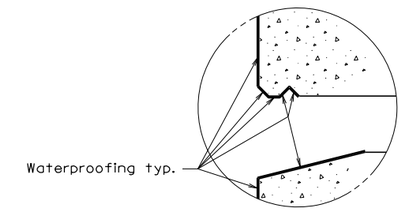

DETAIL A
Not to scale

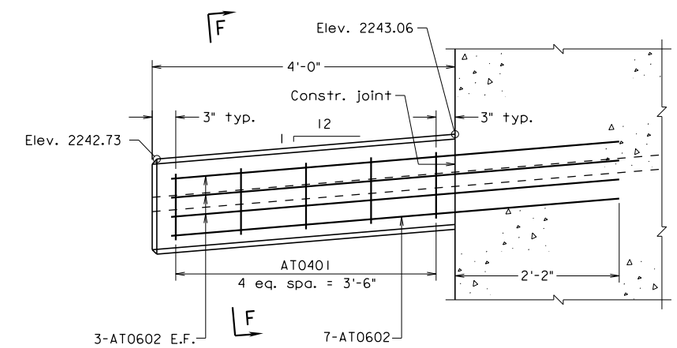

DRAINAGE TROUGH CANTILEVER DETAIL (19)
Scale: 1" = 1'-0"

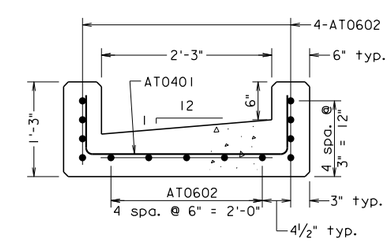

SECTION F-F
Scale: 1" = 1'-0"

(23) 999-99.007.dgn

(24)

VDOT S&B DIVISION
RICHMOND, VA
STRUCTURAL ENGINEER

ABUTMENTS
VIRGINIA ABUTMENT SAMPLE PLANS
ABUTMENT DETAILS SHEET

Scale: ¾" = 1'-0" unless noted otherwise

©2016, Commonwealth of Virginia

No.	Description	Date
	Revisions	

COMMONWEALTH OF VIRGINIA
DEPARTMENT OF TRANSPORTATION

STRUCTURE AND BRIDGE DIVISION

(21)

ABUTMENT A
SECTIONS AND MISC. DETAILS

Designed: KJM
Drawn: KJM
Checked: JCM

Date: May 2016

Plan: 999-

PART 2
DATE: 18May2016
SHEET 5 of 10
FILE NO. 17.10-5

STATE	FEDERAL AID ROUTE	FEDERAL AID PROJECT	STATE ROUTE	STATE PROJECT	SHEET NO.
VA.	—	·	94	0094-038-104, B601	8

(22)

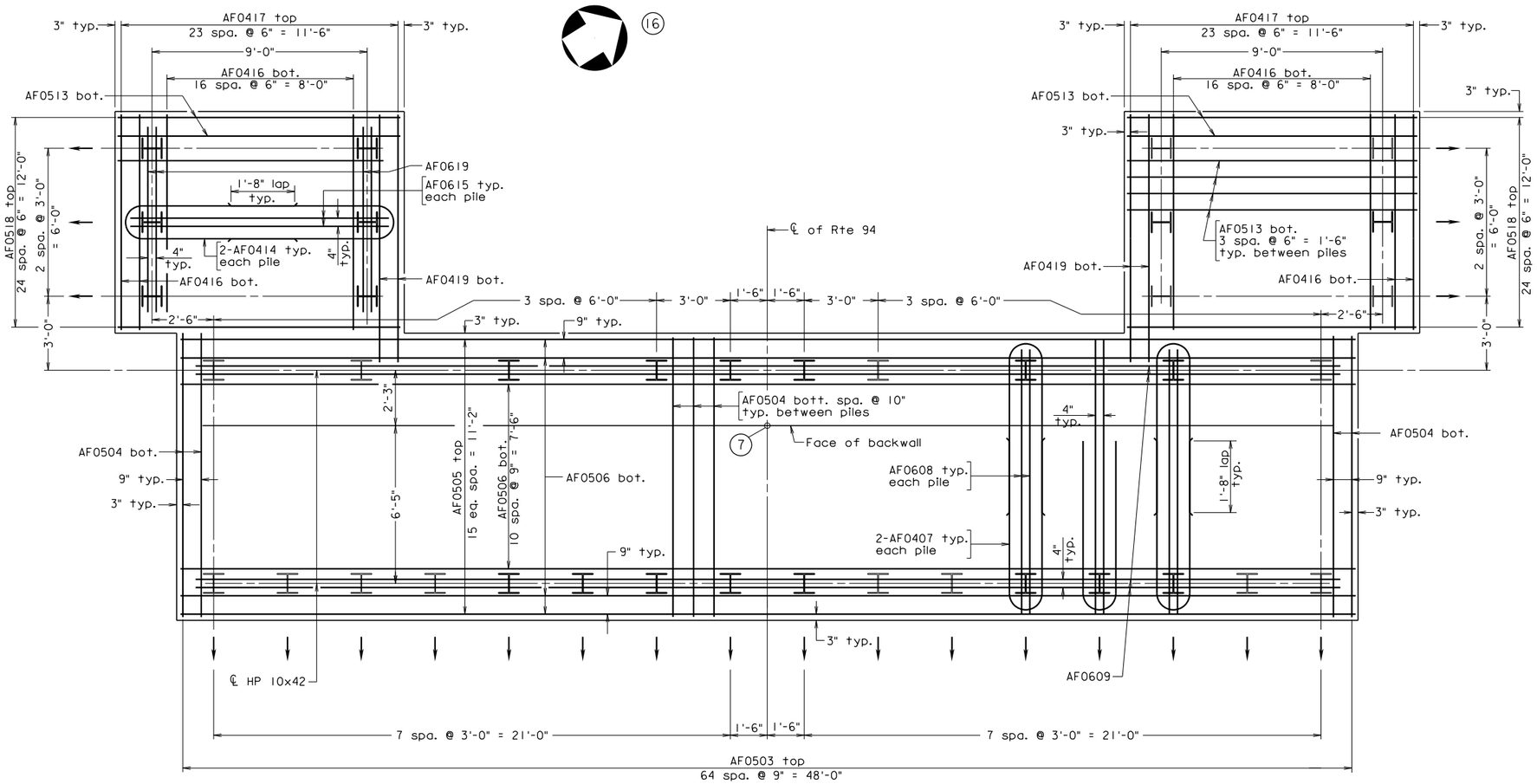

Indicates direction of batter

PILE AND FOOTING REINFORCEMENT PLAN (8)

Notes: (15)

See sheets 6, 7 and 9 for footing elevations.

(23) 999-99_008.dgn

(24)

VDOT S&B DIVISION
RICHMOND, VA
STRUCTURAL ENGINEER

ABUTMENTS
VIRGINIA ABUTMENT SAMPLE PLANS
ABUTMENT DETAILS SHEET

Scale: 3/8" = 1'-0"

©2016, Commonwealth of Virginia

No.	Description	Date
	Revisions	

COMMONWEALTH OF VIRGINIA
DEPARTMENT OF TRANSPORTATION

STRUCTURE AND BRIDGE DIVISION

(21) ABUTMENT A
FOUNDATION PLAN

Designed: ABC
Drawn: ABC
Checked: ABC

Date: May 2016

Plan: 999-

PART 2
DATE: 18May2016
SHEET 6 of 10
FILE NO. 17.10-6

STATE	FEDERAL AID ROUTE	FEDERAL AID PROJECT	STATE ROUTE	STATE PROJECT	SHEET NO.
VA.	—		94	0094-038-104, B601	9

(22)

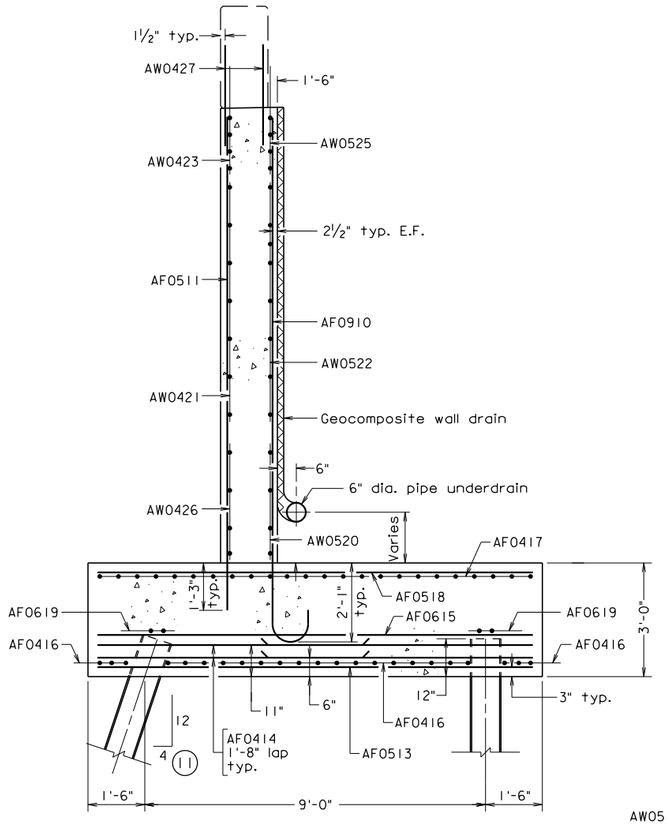

SECTION G-G (10)

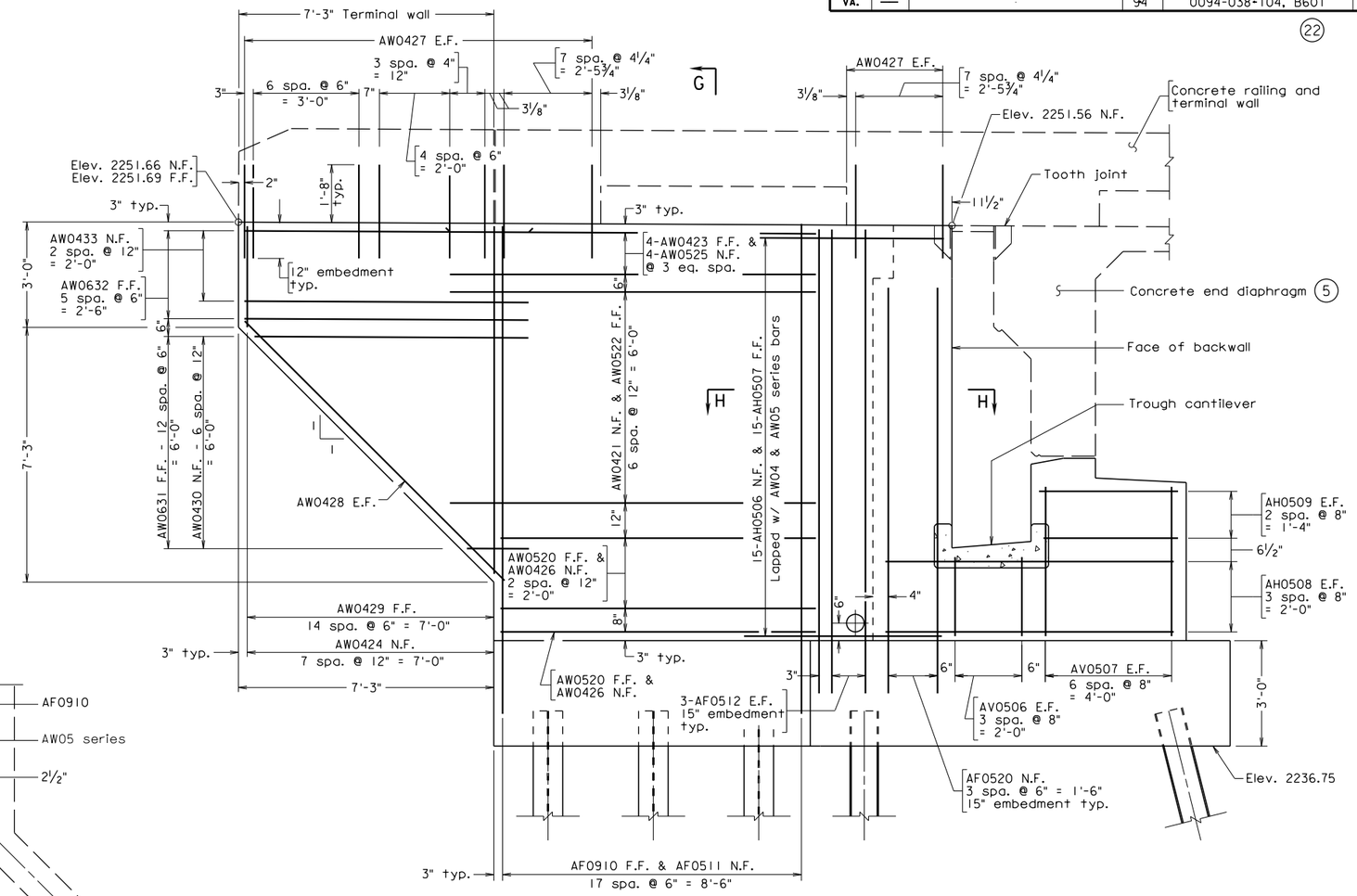

VIEW A (5 | 9) (9)

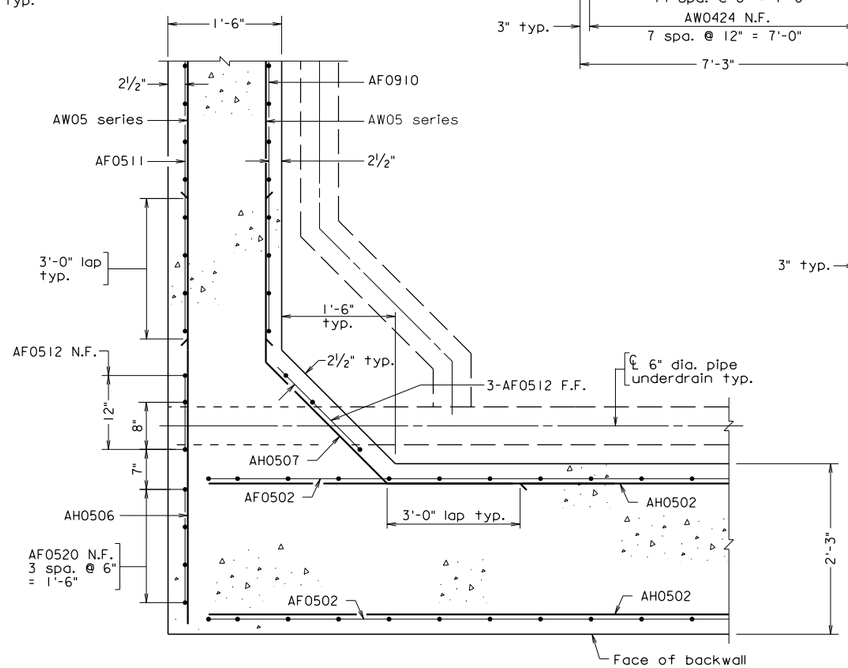

SECTION H-H
Scale: 1" = 1'-0"

(15) Notes:

See sheet 8 for pile batter, pile spacing, and additional footing reiforcement details.

See sheets 32 and 33 for concrete end diaphragm details.

See sheets 34 and 35 for details of tooth joint.

(23) 999-99_009.dgn

(24)

VDOT S&B DIVISION
RICHMOND, VA
STRUCTURAL ENGINEER

ABUTMENTS
VIRGINIA ABUTMENT SAMPLE PLANS
ABUTMENT DETAILS SHEET

Scale: ½" = 1'-0" unless noted otherwise

©2016, Commonwealth of Virginia

No.	Description	Date

Revisions

COMMONWEALTH OF VIRGINIA
DEPARTMENT OF TRANSPORTATION

STRUCTURE AND BRIDGE DIVISION

(21) ABUTMENT A
WINGWALL DETAILS

Designed: KJM
Drawn: KJM
Checked: JCM

Date: May 2016

Plan: 999-

PART 2
DATE: 18May2016
SHEET 7 of 10
FILE NO. 17.10-7

STATE	FEDERAL AID ROUTE	FEDERAL AID PROJECT	STATE ROUTE	STATE PROJECT	SHEET NO.
VA.	—		94	0094-038-104, B601	33

(22)

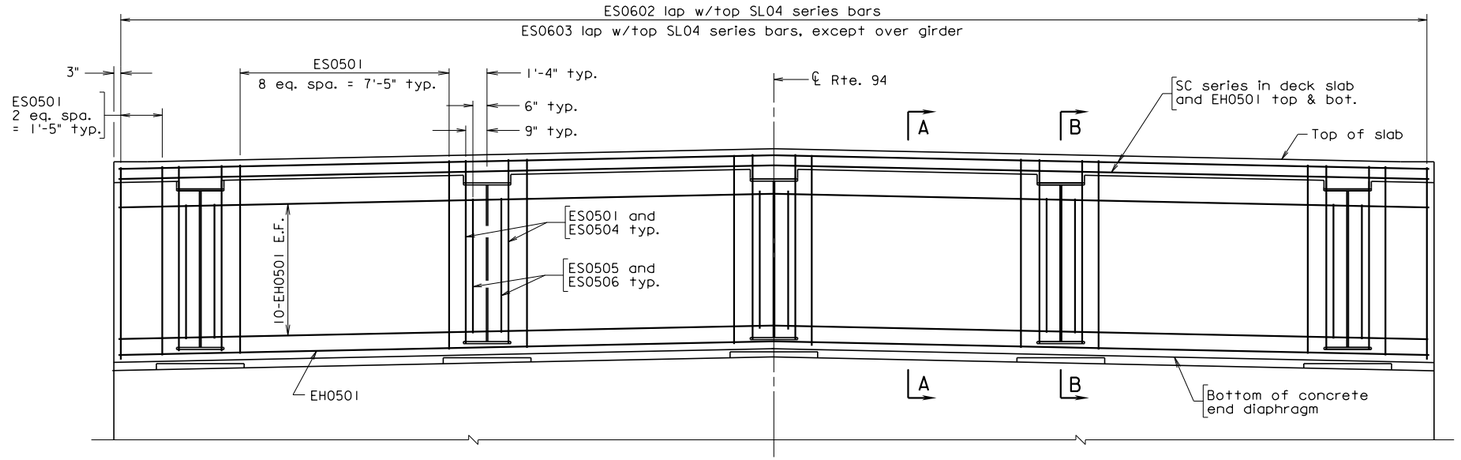

ELEVATION (13)
Scale: 3/8" = 1'-0"

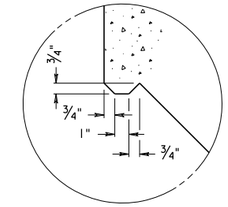

DETAIL A
Not to scale

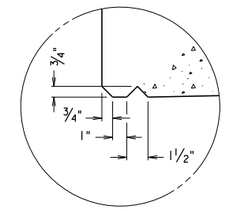

DETAIL B
Not to scale

(15) Note:

The end diaphragm shall be cast when the least thermal movement of the superstructure can be expected during the period of the the initial set of the concrete in the backwall: for instance, (1) dusk or (2) during an unexpected uniformly cloudy day.

Forms for the end diaphragm shall be attached to the girders only; the forms shall not be attached to or blocked against the abutment stem. The backwall and forms must be free to move in relation to the abutment.

Concrete in end diaphragms shall achieve 100% design strength before deck concrete is cast or construction loads are placed on the deck.

For deck slab details, see sheets 30 and 31.

For abutment details, see sheets 5 through 9.

For tooth expansion joint details, see sheet 34.

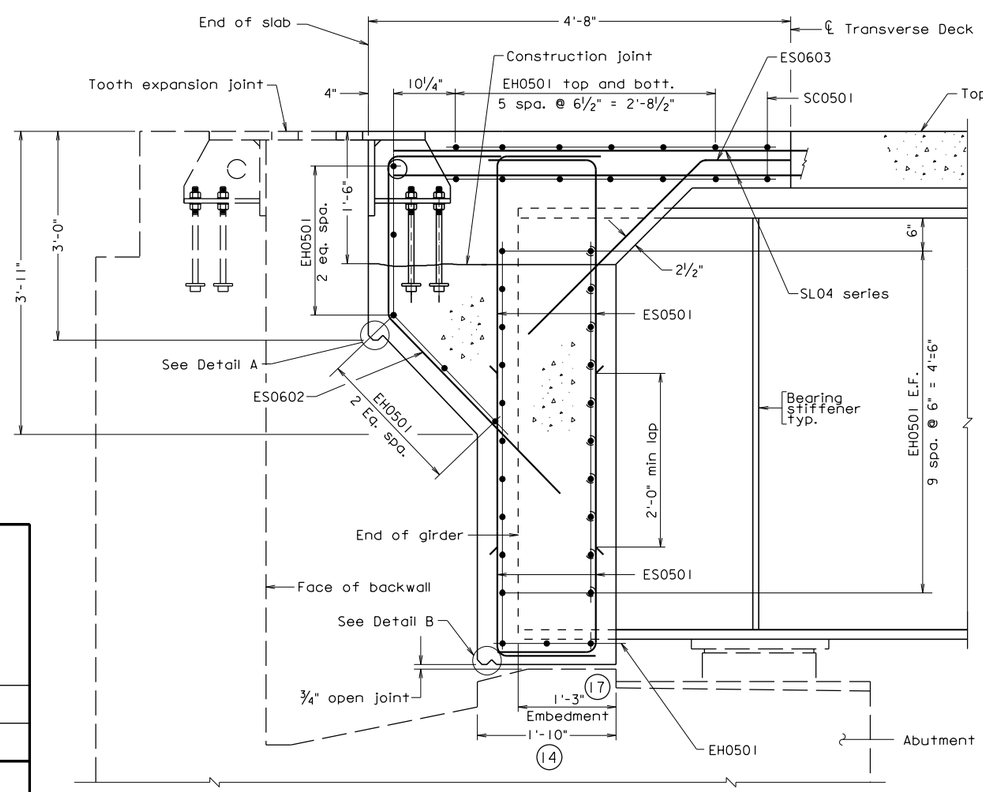

SECTION A-A (13)

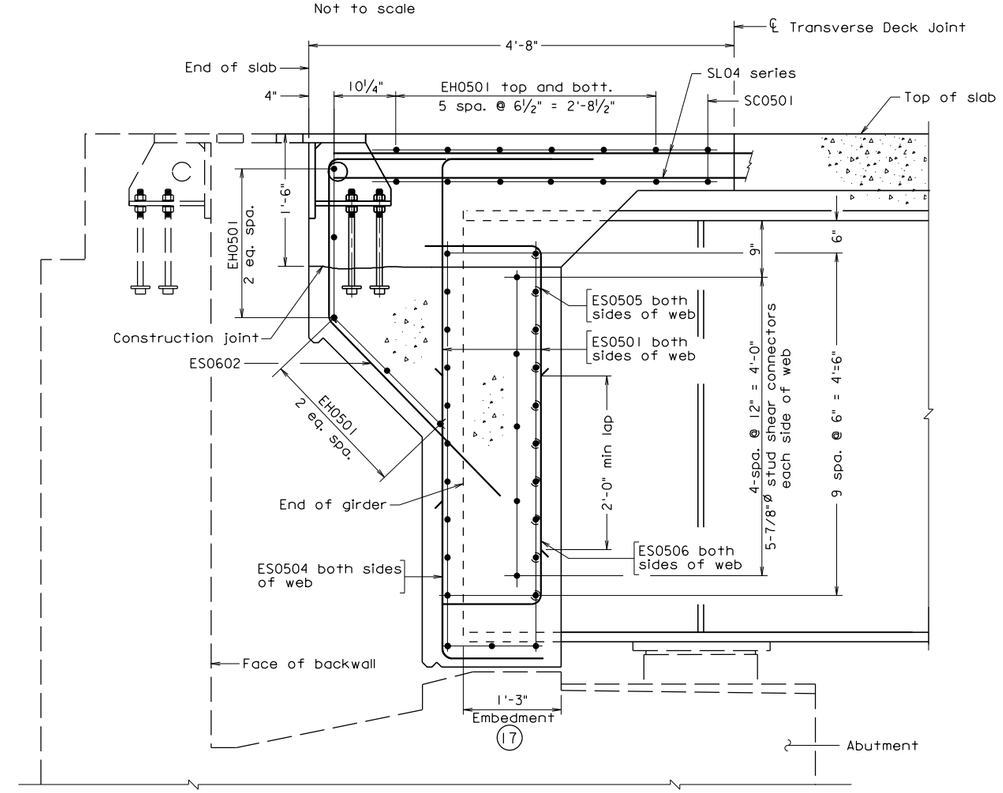

SECTION B-B (13)

ABUTMENTS
VIRGINIA ABUTMENT SAMPLE PLANS
ABUTMENT DETAILS SHEET

(23) 999-99.033.dgn

(24)

VDOT S&B DIVISION
RICHMOND, VA
STRUCTURAL ENGINEER

No.	Description	Date
	Revisions	

COMMONWEALTH OF VIRGINIA
DEPARTMENT OF TRANSPORTATION

STRUCTURE AND BRIDGE DIVISION

(21) DECK SLAB DETAILS (5)
CONCRETE END DIAPHRAGM

Designed: KJM
Drawn: KJM
Checked: JCM
Date: Aug. 2016
Plan: 999-

PART 2
DATE: 17Aug2016
SHEET 8 of 10
FILE NO. 17.10-8

Scale: 1" = 1'-0" unless otherwise noted

©2016, Commonwealth of Virginia

CHECK LIST FOR SAMPLE PLANS:

1. Show full PLAN and ELEVATION view of abutment complete with dimensions at a preferred scale of $^{3}/_{8}$" = 1'-0" but no smaller than $^{1}/_{4}$" = 1'-0".

2. The dimensioning (layout) of the abutment on the PLAN view shall be referenced to the intersection (tie point) of the route ℄ or ℄ and the face of abutment backwall.

3. Label skew angle (if applicable).

4. Show SECTION (typical) view through abutment complete with dimensions at a scale of $^{1}/_{2}$" = 1'-0" unless scale is insufficient to show adequate details.

5. The details for the cast-in-place concrete end diaphragm shall shown on the Deck Plan detail sheet(s).

6. Label the location centerline/baseline as shown on the title sheet.

7. "Face of backwall" shall be used as the reference line for layout of alternate backwall abutments. Any stations and elevations required shall be referenced to this line.

8. Show full PILE AND FOOTING REINFORCEMENT PLAN for abutment footings on pile complete with dimensions showing the pile layout as well as the size and spacing of reinforcing steel at a scale of $^{3}/_{8}$" = 1'-0" but no smaller than $^{1}/_{4}$" = 1'-0". For abutments on spread footings show full FOOTING REINFORCEMENT PLAN complete with dimensions as well as the size and spacing of reinforcing steel at a scale of $^{3}/_{8}$" = 1'-0" but no smaller than $^{1}/_{4}$" = 1'-0".

9. Show elevation VIEW of abutment wingwall complete with dimensions as well as the size and spacing of reinforcing steel at a scale of $^{3}/_{8}$" = 1'-0" but no smaller than $^{1}/_{4}$" = 1'-0". See File Nos. 17.03-8 and -9.

10. Show SECTION (typical) view through abutment wingwall complete with dimensions at a scale of $^{1}/_{2}$" = 1'-0" unless scale is insufficient to show adequate details.

11. Show pile type used along with the required batter for toe piles.

12. The approach slab seat (7") shall be provided on all integral backwalls regardless of whether the bridge will have an approach slab.

13. Show SECTION view at a preferred scale of $^{3}/_{8}$" = 1'-0" but no smaller than $^{1}/_{4}$" = 1'-0" with typical sections cut between beams/girders and at end of beam/girder at a preferred scale of $^{3}/_{4}$" = 1'-0" but no smaller than $^{1}/_{2}$" = 1'-0". Coordinate the sections to provide the necessary details with repetition only where required.

14. The minimum width of the concrete end diaphragm shall be 1'-7" for steel stringers and 1'-10" for concrete stringers. Clipping flanges is preferable to increases in thickness where required due to skew.

15. Show Notes as required. For instructions on completing the notes, see File Nos. 04.03-1 and -2.

16 Show North Arrow above plan view.

17 The minimum embedment into the concrete end diaphragm shall be 6” for steel stringers and 9” for concrete stringers.

18 Show SECTION view through drainage trough showing the trough top and bottom elevations at ℄ of beams/girders.

19 Show miscellaneous details, e.g., THROUGH WATERPROOFING and DRAINAGE THROUGH CANTILEVER DETAILS.

20 Include standard sheet(s) in the plan assembly for appropriate joint type with minor modifications as necessary for use with Virginia Abutments. For specific requirements and guidelines for completing those standard detail sheets, refer to the Notes to Designer for the particular standard contained in Part 3 of this manual.

21 For instructions on completing the title block, see File No. 03.03

22 For instructions on completing the project block, see File No. 04.01.

23 For instructions on developing the CADD sheet number, see File Nos. 01.01-6 and 01.14-4.

24 For instructions on completing the block for sealing, signing and dating this sheet, see File Nos. 01.16-1 thru -6.

25 Provide the appropriate geotechnical design data in tabular format if not combined with pier data and provided near front of the plan assembly. For additional information, see File No. 17.02-3. The plan set for these sample sheets combined the design data near the front of the plan assembly (i.e., not shown on these sample sheets). See sample pier sheets and accompanying notes in File Nos. 15.03-1 thru -6 for examples of data tables on sheets.

26 Where architectural treatment(s) is used, provide limits of architectural texture, coping widths, texture grid scales, relief, treatment position and other necessary details as applicable. See Chapter 5 of this manual for requirements, details and information for architectural treatment.

GENERAL INFORMATION:

This section of the chapter establishes the general practices/requirements necessary for the completion of a plan assembly for a typical conventional abutment substructure. Additional practices and requirements necessary for the detailing of conventional abutments can be found in Section 17.03 of this chapter. Included are sample plan detail sheets with checklist for completing the bridge plan assembly.

It is not the intent of the sample plan detail sheets contained in this section to show practices and requirements for the design of the abutment substructure of a bridge. The plan detail sheets shown in this section are intended only to provide the designer with the necessary detail requirements for a complete bridge plan assembly.

Information placed in blocks is for designer information only and is not to be placed on the abutment detail sheets.

For location of the abutment detail sheets in the bridge plan assembly, see File No. 01.02-4.

The practices for the completion of interior sheets and standard detail sheets contained in Chapter 4 shall be adhered to.

This sheet is intentionally left blank

STATE	FEDERAL AID ROUTE	FEDERAL AID PROJECT	STATE ROUTE	STATE PROJECT	SHEET NO.
VA.	—	-	11	0011-044-283, B611	3

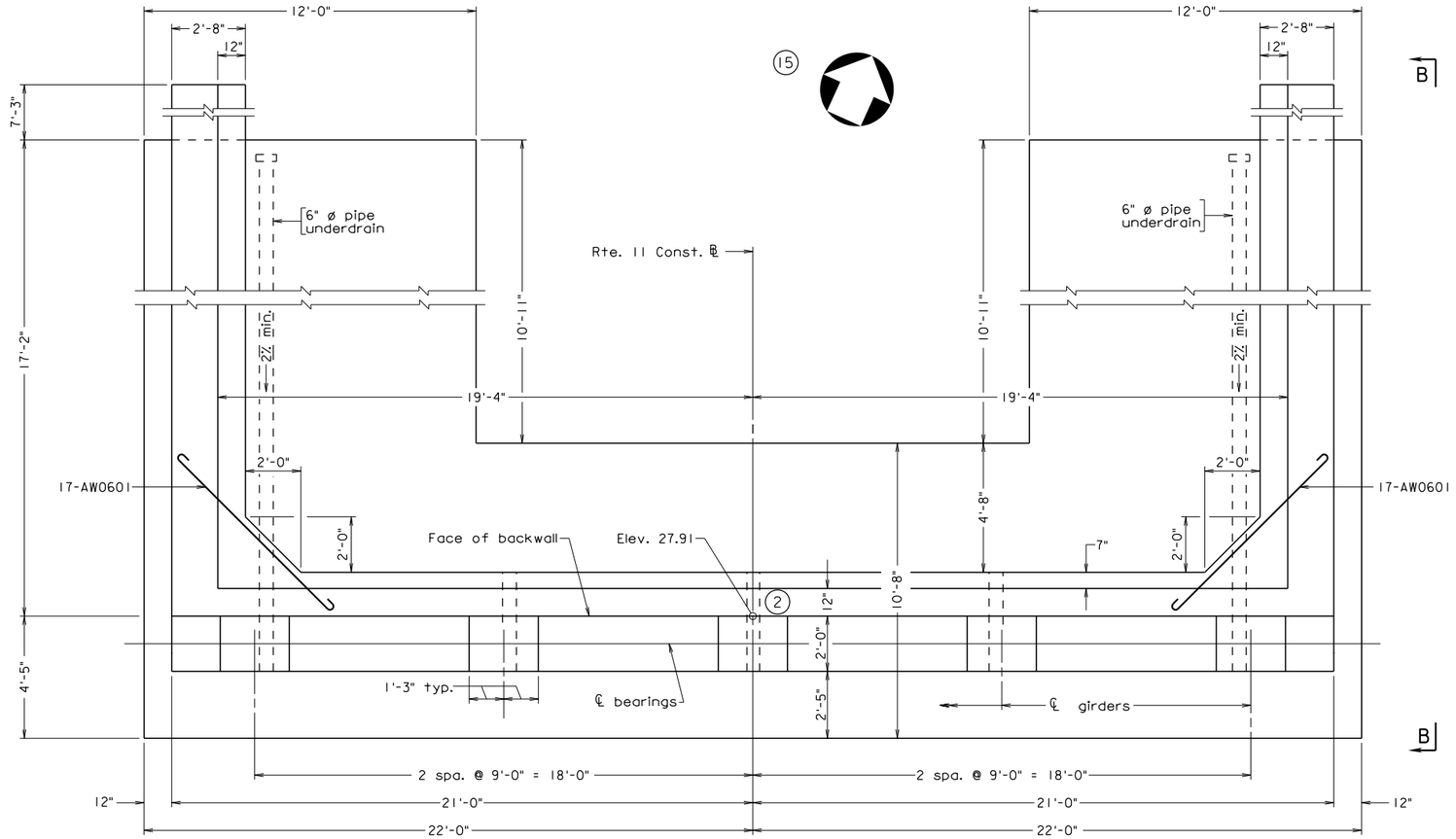

PLAN (1)

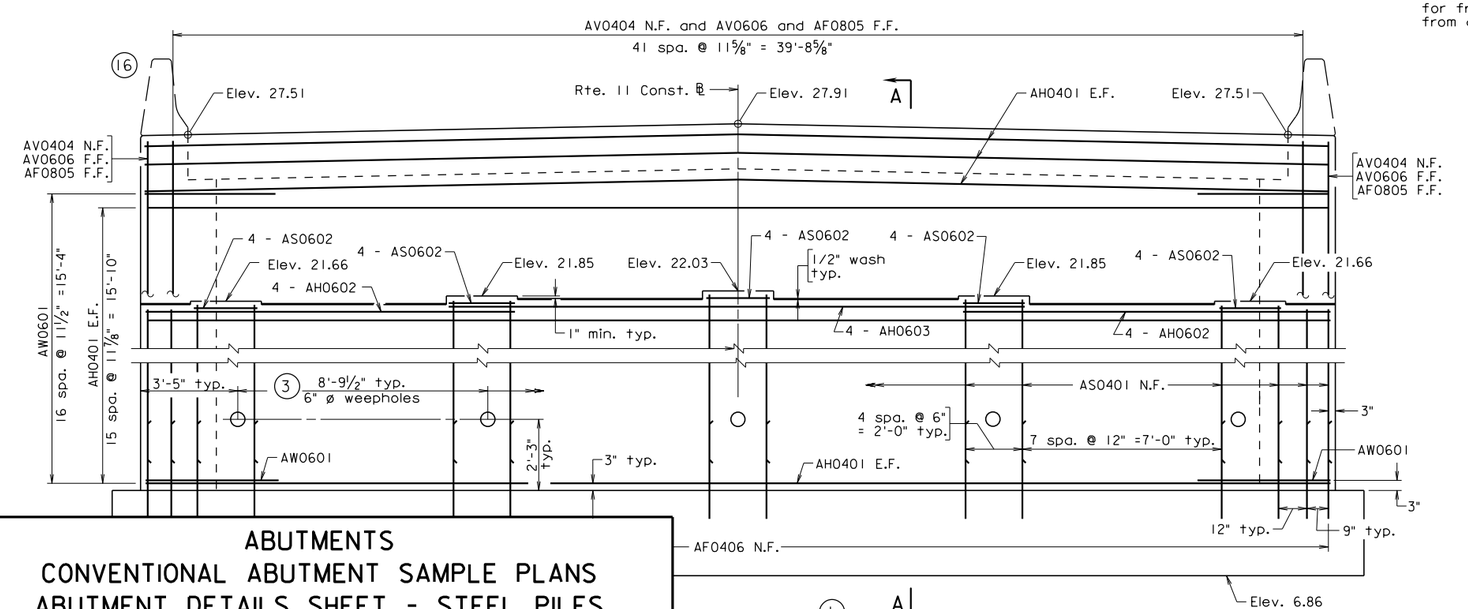

ELEVATION (1)

Scale: ⅜" = 1'-0" unless noted otherwise

Notes: (12)

For PILE AND FOOTING REINFORCING PLAN and TYPICAL ANCHOR BOLT LAYOUT, see sheet 4.

For wingwall details, see sheet 5.

For details of parapet, see sheet 11.

(13) Do not backfill above Elevation 17.91 until superstructure is in place.

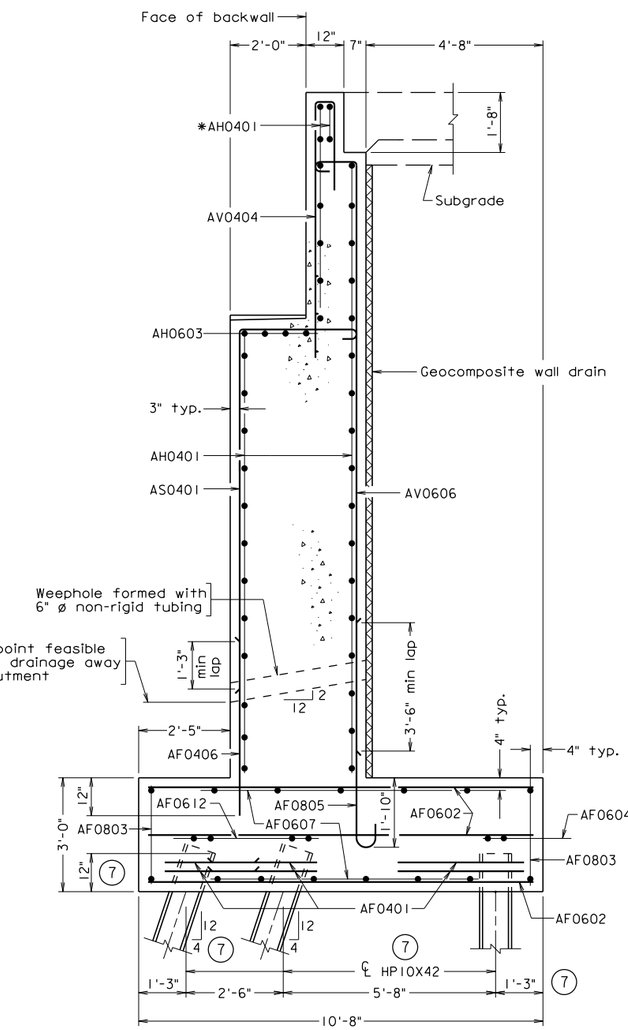

SECTION A-A (4)

Scale: ½" = 1'-0"

ABUTMENTS
CONVENTIONAL ABUTMENT SAMPLE PLANS
ABUTMENT DETAILS SHEET - STEEL PILES

No.	Description	Date
	Revisions	

COMMONWEALTH OF VIRGINIA
DEPARTMENT OF TRANSPORTATION

STRUCTURE AND BRIDGE DIVISION

(17) ABUTMENT A

Designed: ABC
Drawn: DEF
Checked: GHI

Date: May 2011

Plan: 999-

VOL. V - PART 2
DATE: 06Feb2012
SHEET 3 of 10
FILE NO. 17.11-3

VDOT S&B DIVISION
RICHMOND, VA
STRUCTURAL ENGINEER

b99999003.dgn

©2011, Commonwealth of Virginia

STATE	FEDERAL AID ROUTE	FEDERAL AID PROJECT	STATE ROUTE	STATE PROJECT	SHEET NO.
VA.	—	-	11	0011-044-283, B611	4

(18)

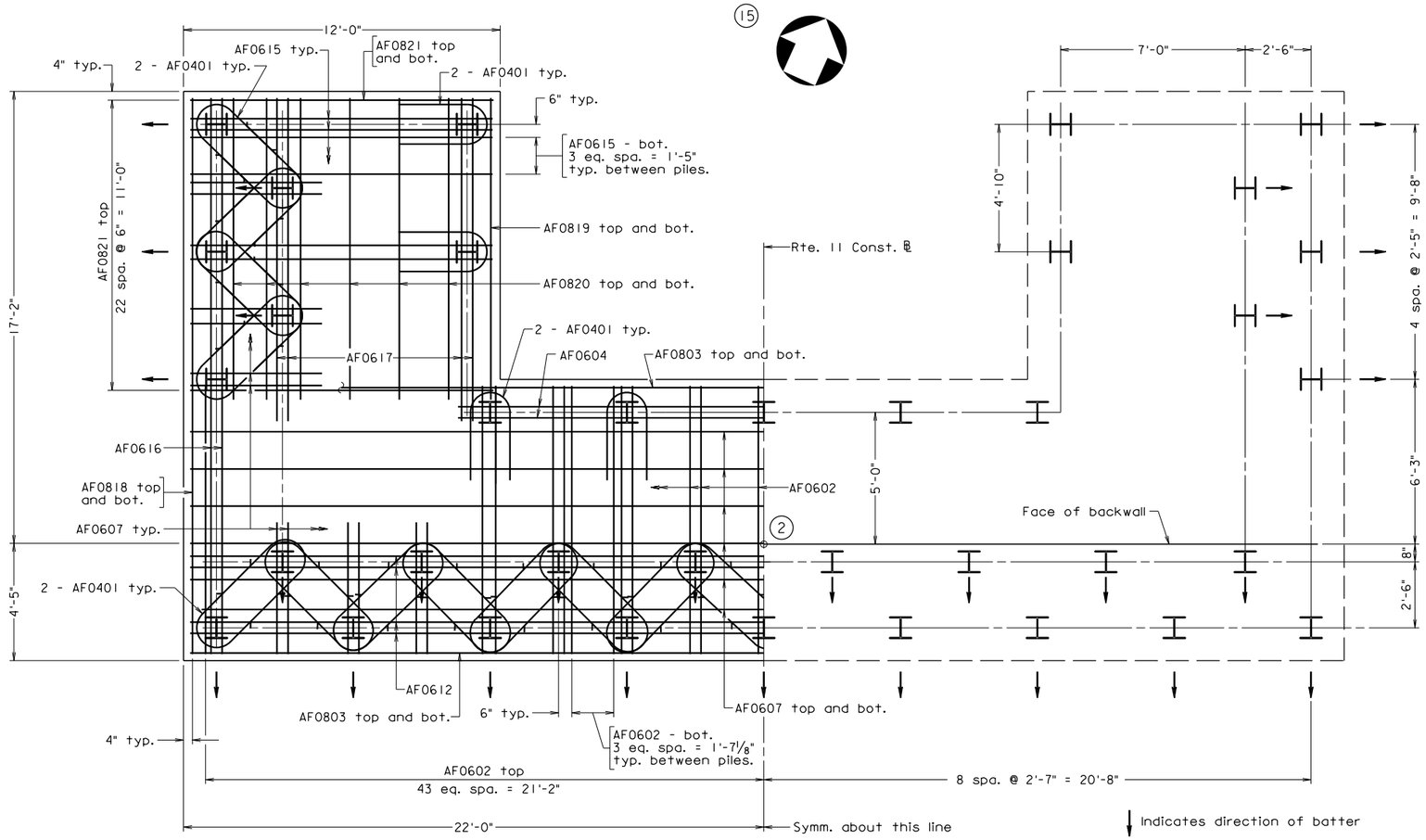

PILE AND FOOTING REINFORCEMENT PLAN (5)

Notes: (12)

The one required test pile and PDA are required to be done prior to driving any other permanent piling for the bridge.

Any vertical pile may be used as the test pile.

Material in the abutment select backfill zone shall be 21A, 21B or Select Material Type I, minimum CBR 30 and shall be compacted in accordance with Sections 303 and 305 of the Specifications.

In cut situations, material with strength characteristics greater than the select backfill may be left in place.

The final depth A of the embankment side slopes shall be regular embankment material placed and finished as required.

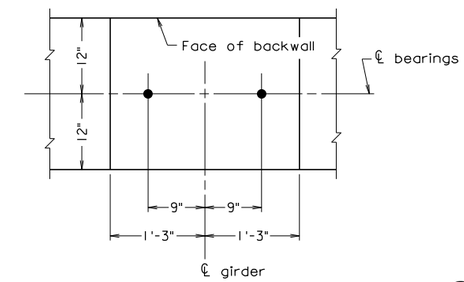

TYPICAL ANCHOR BOLT LAYOUT (9)
Scale: 1" = 1'-0"

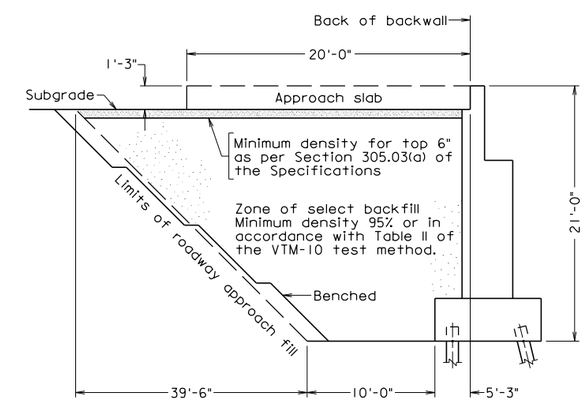

LIMITS OF SELECT BACKFILL MATERIAL (14)
Abutment drainage not shown
Not to scale

b99999004.dgn

(19)

(20)

VDOT S&B DIVISION
RICHMOND, VA
STRUCTURAL ENGINEER

ABUTMENTS
CONVENTIONAL ABUTMENT SAMPLE PLANS
ABUTMENT DETAILS SHEET-STEEL PILES

(5)

Scale: ⅜" = 1'-0" unless noted otherwise

© 2011, Commonwealth of Virginia

No.	Description	Date
	Revisions	

COMMONWEALTH OF VIRGINIA
DEPARTMENT OF TRANSPORTATION

STRUCTURE AND BRIDGE DIVISION

ABUTMENT A - FOOTING AND DETAILS (17)

Designed: ABC
Drawn: DEF
Checked: GHI

Date: May 2011

Plan: 999-

VOL. V - PART 2
DATE: 06Feb2012
SHEET 4 of 10
FILE NO. 17.11-4

STATE	FEDERAL AID ROUTE	FEDERAL AID PROJECT	STATE ROUTE	STATE PROJECT	SHEET NO.
VA.	—	-	11	0011-044-283, B611	5

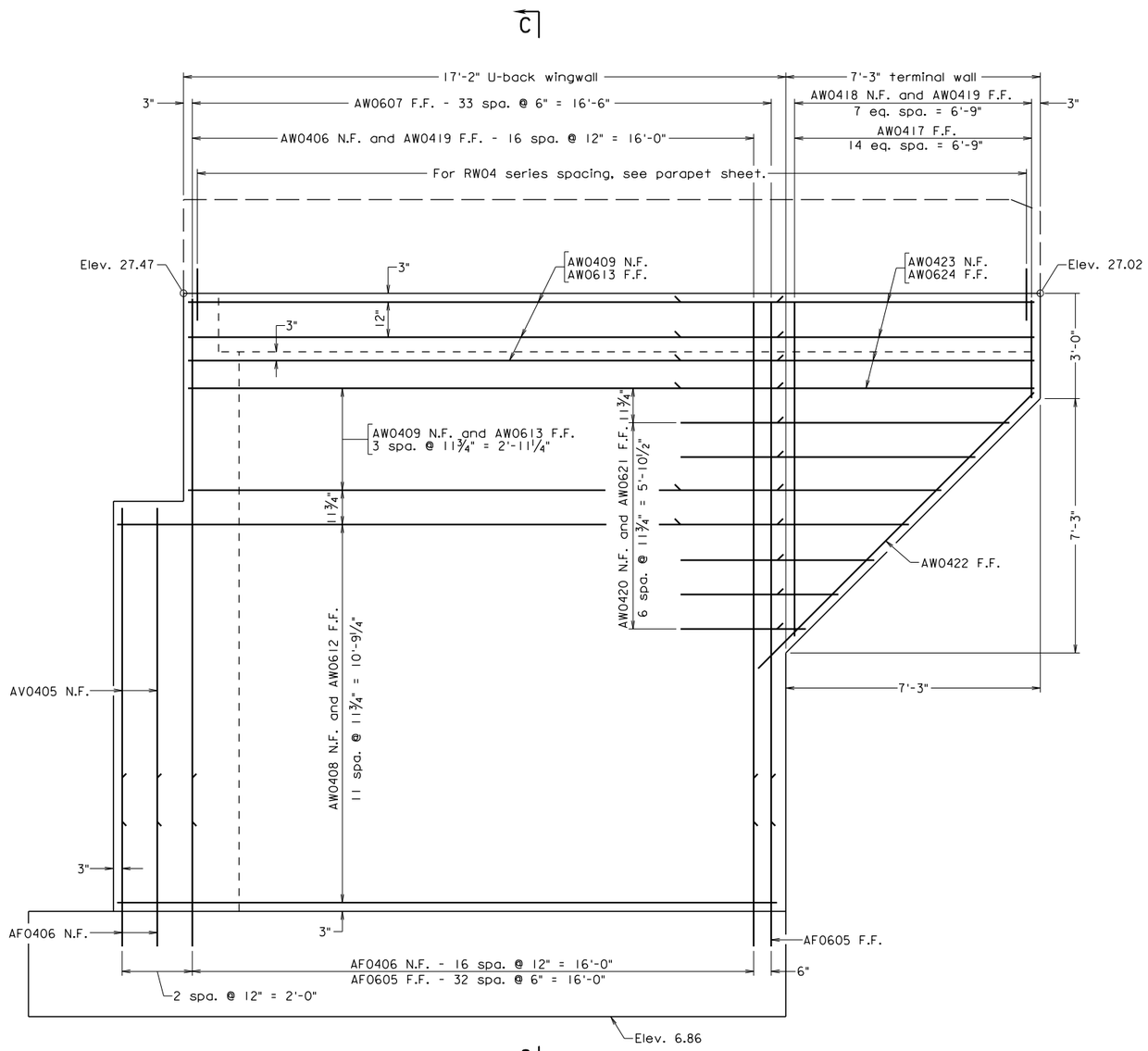

VIEW B-B (10)

Notes: (12)

For details of footing, see sheet 4. For details of parapet, see sheet 11.

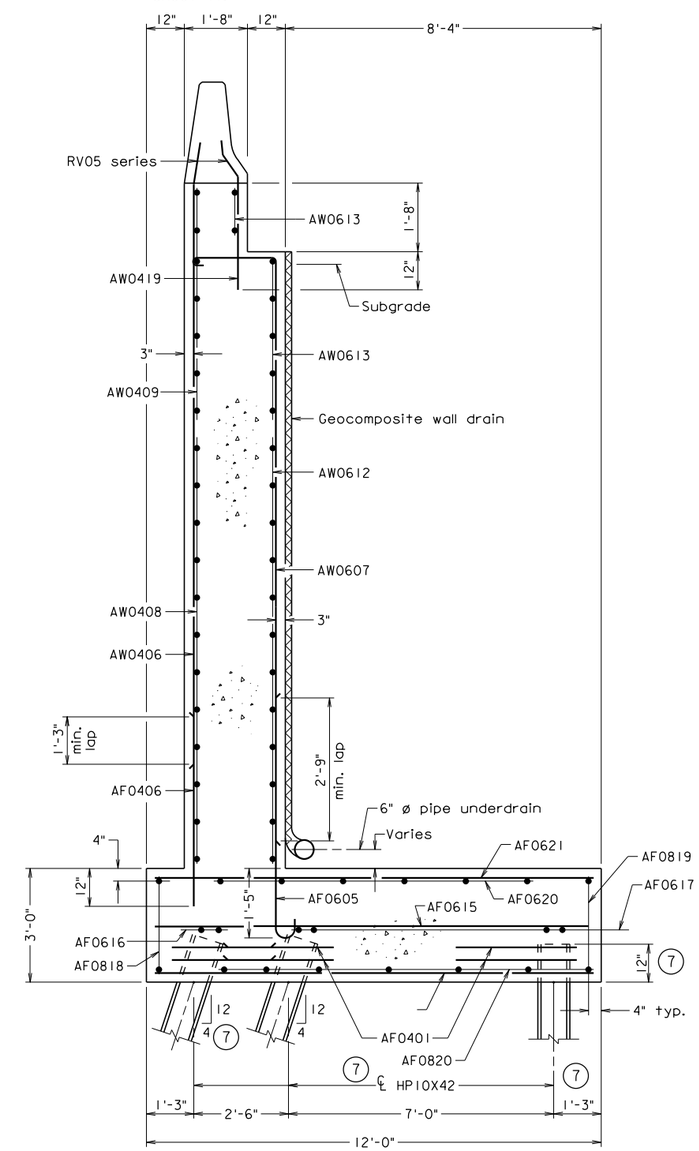

SECTION C-C (11)

ABUTMENTS
CONVENTIONAL ABUTMENT SAMPLE PLANS
ABUTMENT DETAILS SHEET - STEEL PILES

No.	Description	Date
	Revisions	

COMMONWEALTH OF VIRGINIA
DEPARTMENT OF TRANSPORTATION

STRUCTURE AND BRIDGE DIVISION

(17)

ABUTMENT A - WING DETAILS

Designed: ABC
Drawn: GSF
Checked: GH
Date: May 2011
Plan: 999-

VOL. V - PART 2
DATE: 06Feb2012
SHEET 5 of 10
FILE NO. 17.11-5

Scale: ½" = 1'-0"

©2011, Commonwealth of Virginia

(19) (20)

b99999005.dgn

VDOT S&B DIVISION
RICHMOND, VA
STRUCTURAL ENGINEER

STATE	FEDERAL AID ROUTE	FEDERAL AID PROJECT	STATE ROUTE	STATE PROJECT	SHEET NO.
VA.	—	-	11	0011-044-283, B611	3

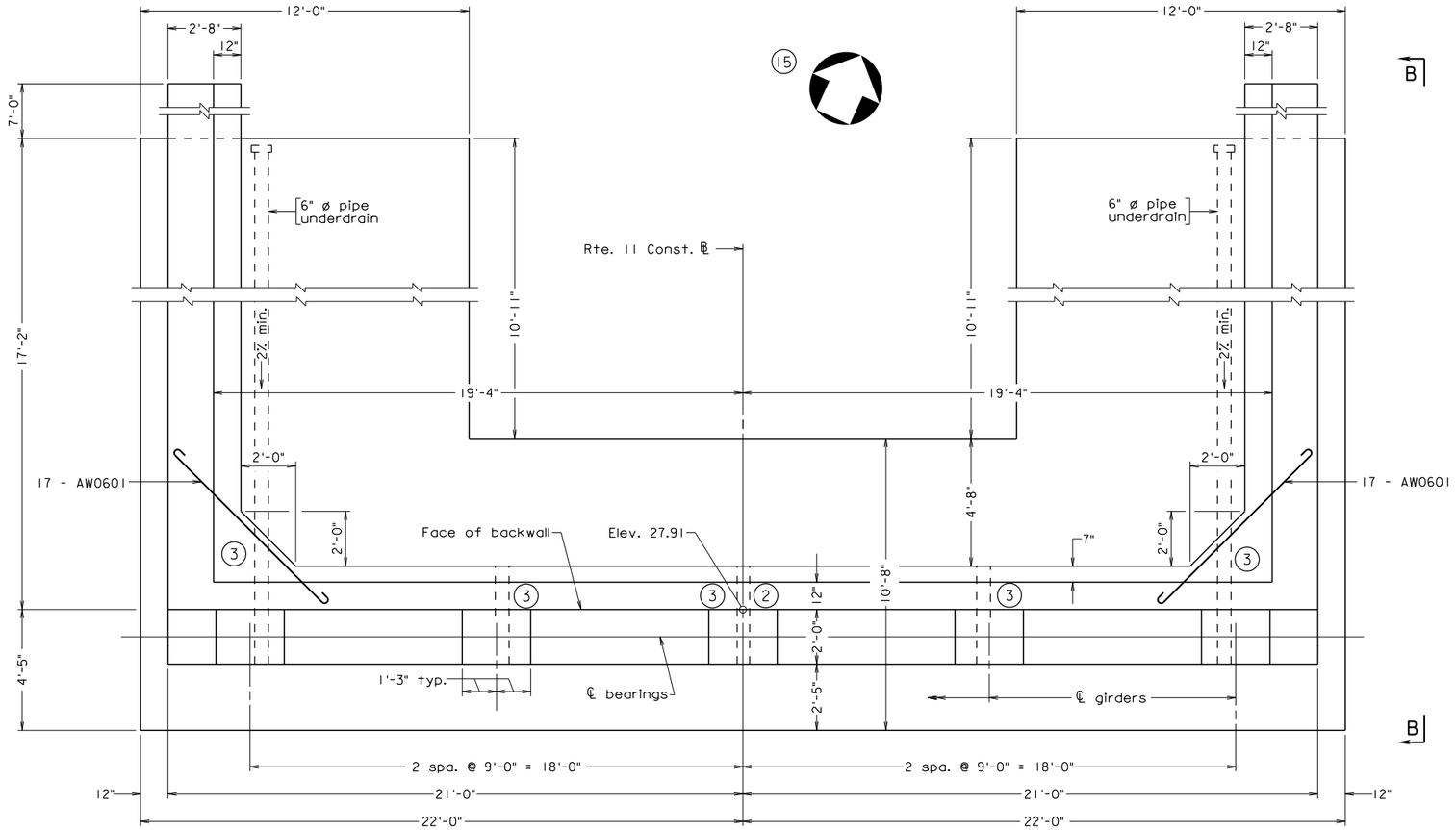

PLAN (1)

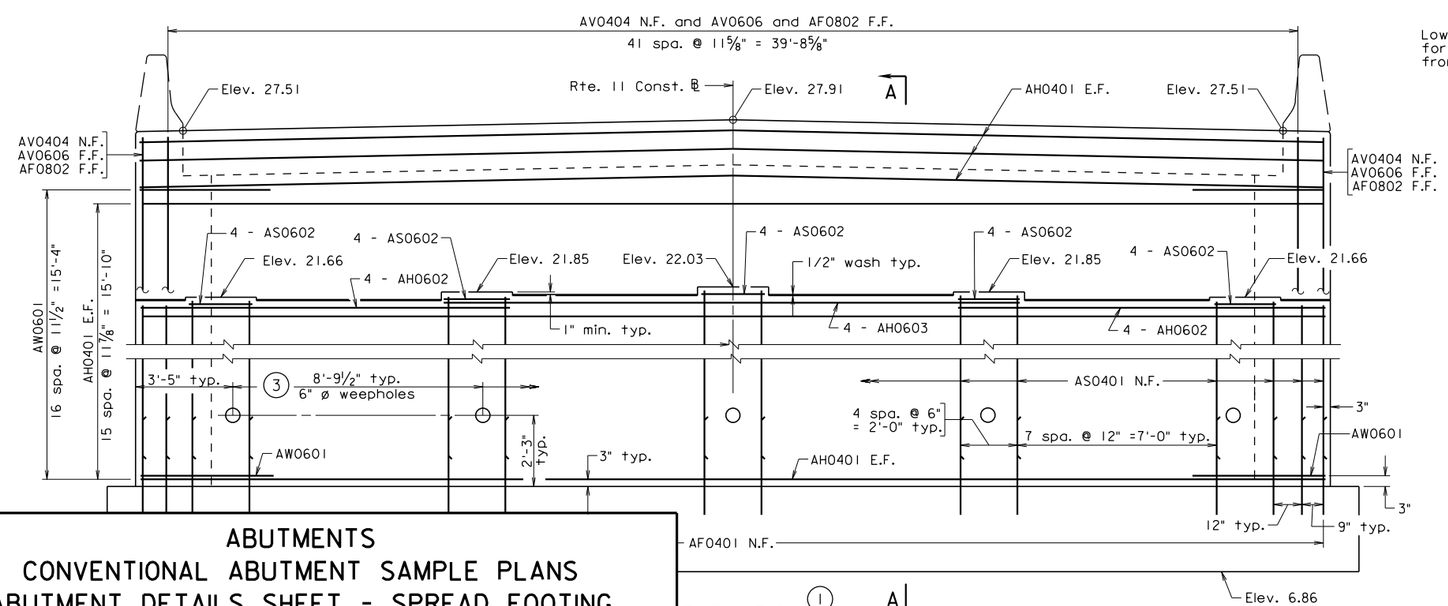

ELEVATION (1)

Scale: ⅜" = 1'-0" unless noted otherwise

Notes: (12)

For footing details, see sheet 4.

For wingwall details, see sheet 5.

For details of parapet, see sheet 11.

(13) Do not backfill above Elevation 17.91 until superstructure is in place.

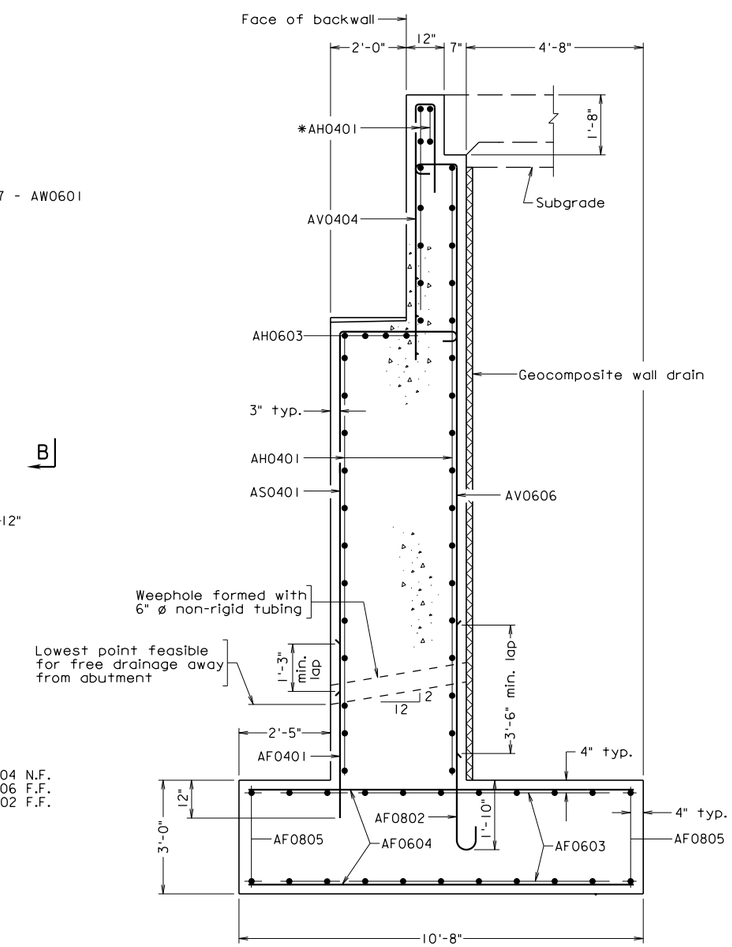

SECTION A-A (4)

Scale: ½" = 1'-0"

(18)

(19) b99999003.dgn

(20)

VDOT S&B DIVISION
RICHMOND, VA
STRUCTURAL ENGINEER

ABUTMENTS
CONVENTIONAL ABUTMENT SAMPLE PLANS
ABUTMENT DETAILS SHEET - SPREAD FOOTING

No.	Description	Date

Revisions

COMMONWEALTH OF VIRGINIA
DEPARTMENT OF TRANSPORTATION

STRUCTURE AND BRIDGE DIVISION

(17) ABUTMENT A

Designed: ABC
Drawn: DEF
Checked: GHI

Date: May 2011

Plan: 999-

VOL. V - PART 2
DATE: 06Feb2012
SHEET 6 of 10
FILE NO. 17.11-6

©2011, Commonwealth of Virginia

STATE	FEDERAL AID ROUTE	FEDERAL AID PROJECT	STATE ROUTE	STATE PROJECT	SHEET NO.
VA.	—	-	11	0011-044-283, B611	4

(18)

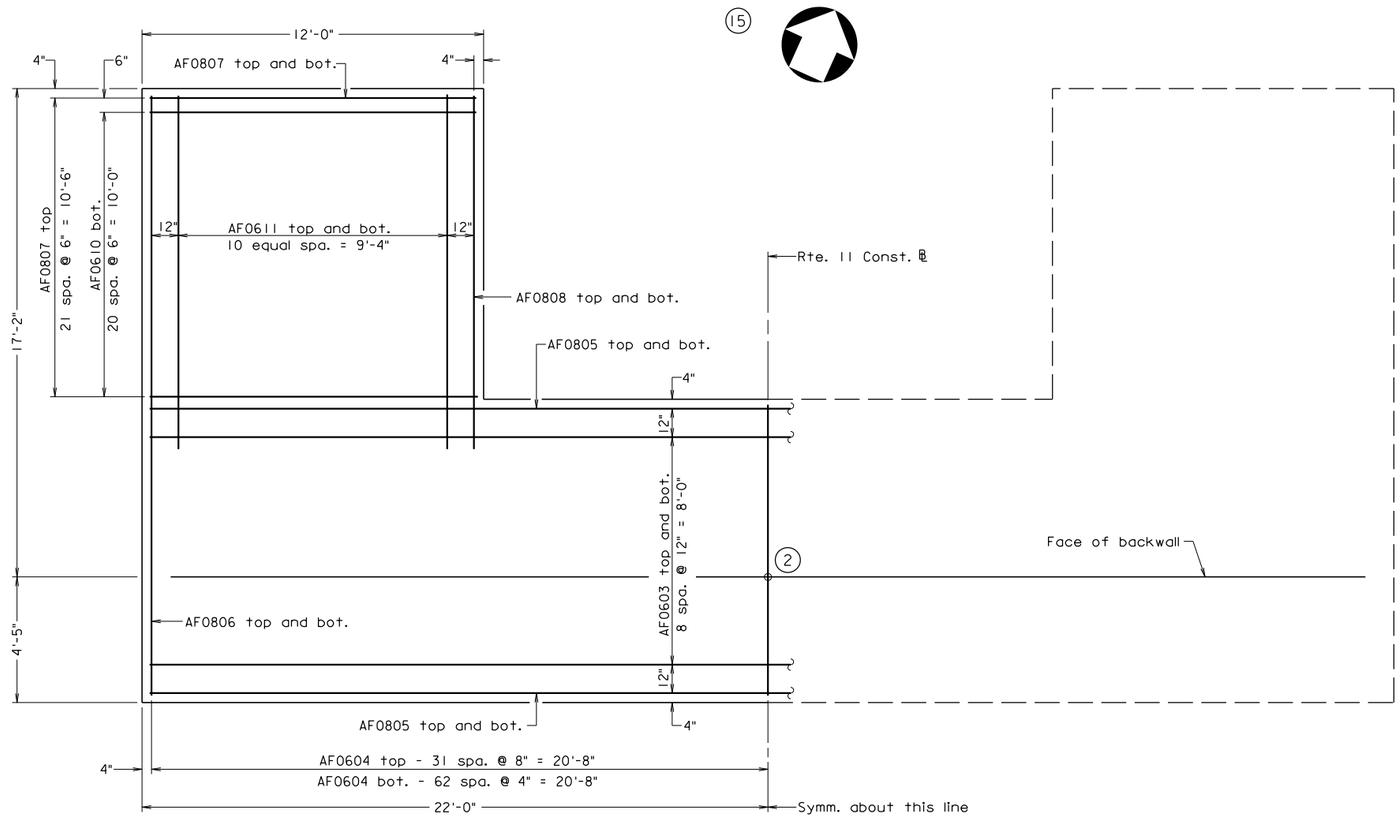

FOOTING REINFORCEMENT PLAN (8)

Notes: (12)

The one required test pile and PDA are required to be done prior to driving any other permanent piling for the bridge.

Any vertical pile may be used as the test pile.

Material in the abutment select backfill zone shall be 21A, 21B or Select Material Type I, minimum CBR 30 and shall be compacted in accordance with Sections 303 and 305 of the Specifications.

In cut situations, material with strength characteristics greater than the select backfill may be left in place.

The final depth A of the embankment side slopes shall be regular embankment material placed and finished as required.

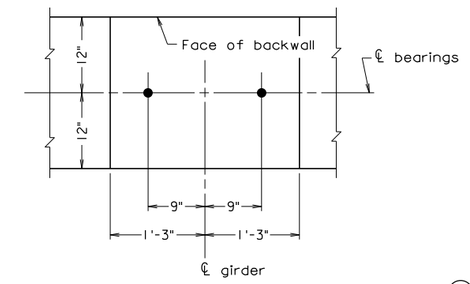

TYPICAL ANCHOR BOLT LAYOUT (9)
Scale: 1" = 1'-0"

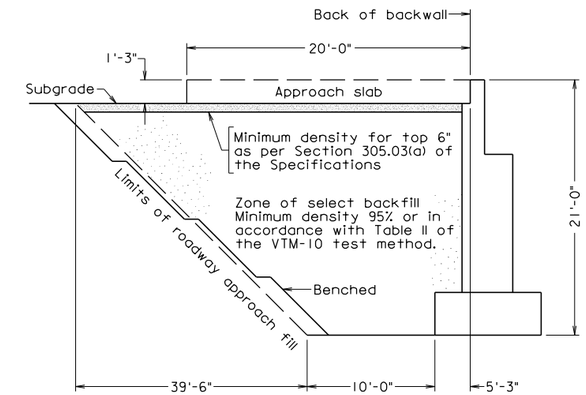

LIMITS OF SELECT BACKFILL MATERIAL (14)
Abutment drainage not shown
Not to scale

(19) b99999004.dgn

(20)

VDOT S&B DIVISION
RICHMOND, VA
STRUCTURAL ENGINEER

ABUTMENTS
CONVENTIONAL ABUTMENT SAMPLE PLANS
ABUTMENT DETAILS SHEET - SPREAD FOOTING

Not to scale

©2011, Commonwealth of Virginia

No.	Description	Date

Revisions

COMMONWEALTH OF VIRGINIA
DEPARTMENT OF TRANSPORTATION

STRUCTURE AND BRIDGE DIVISION

(17) ABUTMENT A - FOOTING AND DETAILS

Designed: ABC
Drawn: DEF
Checked: GHI

Date: May 2011

Plan: 999-

VOL. V - PART 2
DATE: 06Feb2012
SHEET 7 of 10
FILE NO. 17.11-7

STATE	FEDERAL AID ROUTE	FEDERAL AID PROJECT	STATE ROUTE	STATE PROJECT	SHEET NO.
VA.	—	-	11	0011-044-283, B611	5

(18)

Notes: (12)

For details of footing, see sheet 4. For details of parapet, see sheet 11.

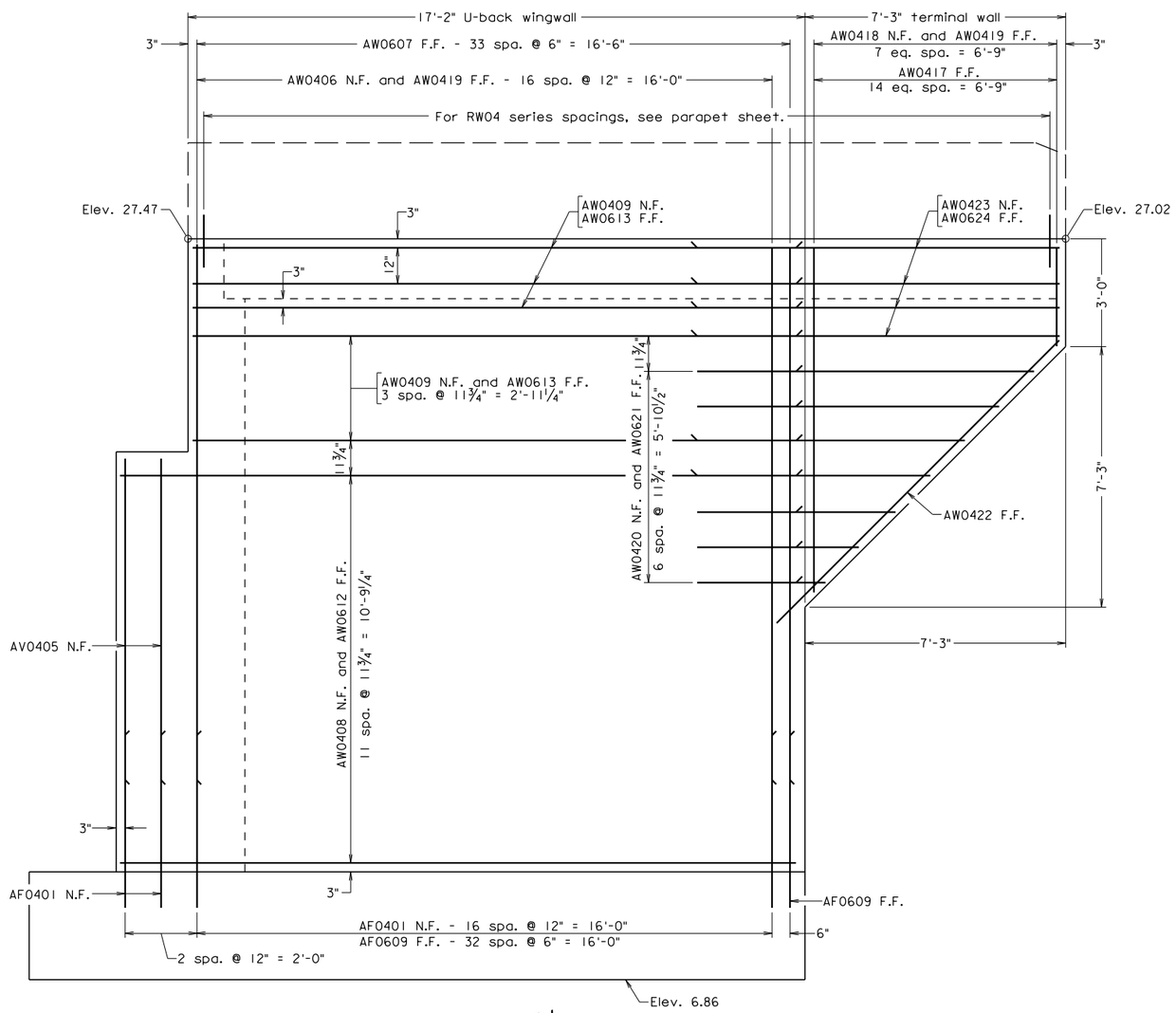

VIEW B-B (10)

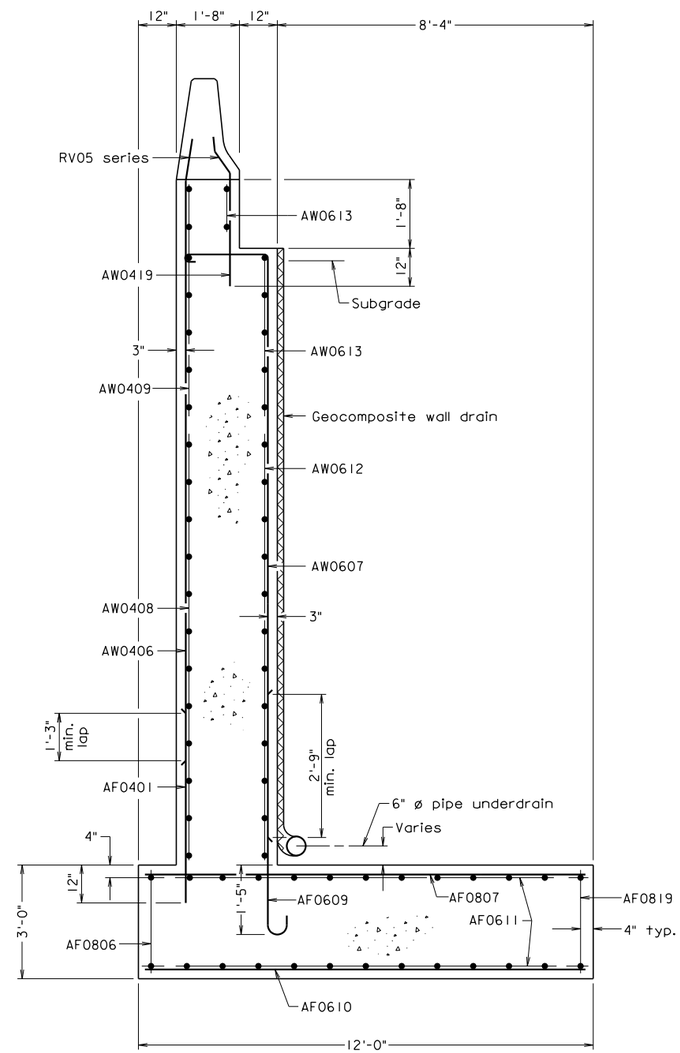

SECTION C-C (11)

(19)

(20)

b99990605.dgn

VDOT S&B DIVISION
RICHMOND, VA
STRUCTURAL ENGINEER

ABUTMENTS
CONVENTIONAL ABUTMENT SAMPLE PLANS
ABUTMENT DETAILS SHEET - SPREAD FOOTING

Scale: ½" = 1'-0"

©2011, Commonwealth of Virginia

No.	Description	Date
	Revisions	

COMMONWEALTH OF VIRGINIA
DEPARTMENT OF TRANSPORTATION

STRUCTURE AND BRIDGE DIVISION

(17)

ABUTMENT A - WING DETAILS

Designed: ABC
Drawn: DEF
Checked: GHI

Date: May 2011

Plan: 999-

VOL. V - PART 2
DATE: 06Feb2012
SHEET 8 of 10
FILE NO. 17.11-8

CHECK LIST FOR SAMPLE PLANS:

1. Show full PLAN and ELEVATION view of abutment complete with dimensions at a scale of $^{3}/_{8}$" = 1'-0" but no smaller than $^{1}/_{4}$" = 1'-0".

2. The dimensioning (layout) of the abutment on the PLAN view shall be referenced to the intersection (tie point) of the route ℄ or ℄ and the face of abutment backwall/end of slab.

3. Show utility blockout locations and details for all utility line(s) and weepholes passing through the abutment backwall/stem on the PLAN and ELEVATION view. For utility blockout details, see File Nos. 17.03-19 and -20.

4. Show SECTION (typical) view through abutment complete with dimensions at a scale of $^{1}/_{2}$" = 1'-0" unless scale is insufficient to show adequate details.

5. Show full PILE AND FOOTING REINFORCEMENT PLAN for abutment footings on piles complete with dimensions showing the pile layout as well as the size and spacing of reinforcing steel at a scale of $^{3}/_{8}$" = 1'-0" but no smaller than $^{1}/_{4}$" = 1'-0". If the plan becomes too cluttered, a separate PILE PLAN as shown in File No. 17.03-18 may be used. Indicate on plan view the direction of pile batter for toe piles. For general requirements for detailing a typical abutment footing on piles, see File Nos. 17.03-15 thru -17.

6. The dimensioning (layout) of piles shall be referenced to the intersection (tie point) of the route ℄ or ℄ and the face of abutment backwall/end of slab.

7. Show pile type used along with the required batter for toe piles. See File No. 17.03-14 for required pile embedments, edge distances and batters for toe piles.

8. Show full FOOTING REINFORCEMENT PLAN for abutments on spread footings complete with dimensions as well as the size and spacing of reinforcing steel at a scale of $^{3}/_{8}$" = 1'-0" but no smaller than $^{1}/_{4}$" = 1'-0". For general requirements for detailing a typical abutment on a spread footing, see File No. 17.03-12 and -13.

9. Show TYPICAL ANCHOR BOLT LAYOUT. The dimensioning (layout) of anchor bolts shall be referenced to the intersection of beam/girder ℄ and ℄ of bearings or line through centers of bearings. The anchor bolt layout shown is for a 0º degree skew. For skews greater than 0° degrees, see File No. 17.03-7 for layout of anchor bolts.

10. Show elevation VIEW of abutment wingwall complete with dimensions as well as the size and spacing of reinforcing steel at a scale of $^{3}/_{8}$" = 1'-0" but no smaller than $^{1}/_{4}$" = 1'-0". See File Nos. 17.03-8 and -9.

11. Show SECTION (typical) view through abutment wingwall complete with dimensions at a scale of $^{1}/_{2}$" = 1'-0" unless scale is insufficient to show details.

12. Show Notes as required. For instructions on completing the notes, see File Nos. 04.03-1 and -2.

13. Add note when abutment is not stable without superstructure being in place. See File No. 17.02-2.

(14) Show LIMITS OF SELECT BACKFILL MATERIAL detail complete with dimensions and notes on the abutment plan details sheet. For detail(s) and notes, see Section 17.13.

(15) Show North Arrow above plan view.

(16) Parapets/railings on the ELEVATION view shall be shown with phantom lines.

(17) For instructions on completing the title block, see File Nos. 04.02-1 and -2.

(18) For instructions on completing the project block, see File No. 04.01.

(19) For instructions on developing the CADD sheet number, see File Nos. 01.01-6 and 01.14-4.

(20) For instructions on completing the block for sealing, signing and dating plan assembly sheets, see File Nos. 01.16-1 thru -6.

(21) Provide the appropriate geotechnical design data in tabular format if not combined with pier data and provided near front of the plan assembly. For additional information, see File No. 17.02-3. The plan set for these sample sheets combined the design data near the front of the plan assembly (i.e., not shown on these sample sheets). See sample pier sheets and accompanying notes in File Nos. 15.03-1 thru -6 for examples of data tables on sheets.

(22) Where architectural treatment(s) is used, provide limits of architectural texture, coping widths, texture grid scales, relief, treatment position and other necessary details as applicable. See Chapter 5 of this manual for requirements, details and information for architectural treatment.

GENERAL INFORMATION:

This section establishes the practices and requirements regarding the detailing of the abutment drainage system.

This section contains specific requirements for the detailing of abutment drainage. It is not the intent of these requirements and guidelines to supercede the requirements contained in Chapter 1 of this manual but to convey necessary information to the designer for the detailing the abutment drainage system.

All abutments on rock foundations and all U-back wing abutments regardless of height shall be drained.

Geocomposite wall drains shall conform to the requirements set forth in Section 245.03(f) of the Road and Bridge Specifications. Geocomposite wall drains shall be included as bid item in the Estimated Quantities table shown on the plans.

Pipe underdrain shall conform to the requirements set forth in Section 232.02 of the Road and Bridge Specifications. Pipe underdrain shall be included as bid item in the Estimated Quantities table shown on the plans.

Weepholes when required, shall be spaced approximately 10’-0” on centers.

For select backfill used behind all abutments, see File Nos. 17.13-1 thru -5.

BRIDGES OVER HIGHWAYS OR RAILROADS:

For full integral abutments:

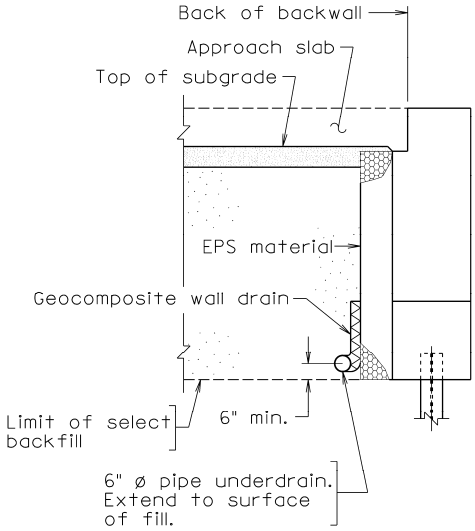

SECTION THROUGH ABUTMENT

For semi-integral abutments:

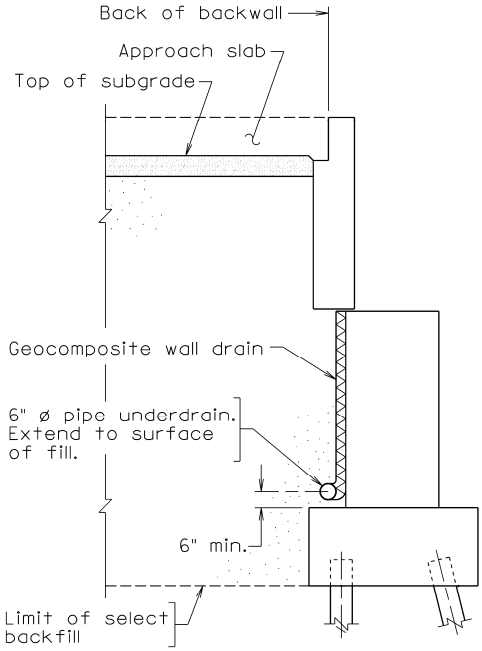

SECTION THROUGH ABUTMENT

ABUTMENTS **ABUTMENT DRAINAGE** **BRIDGES OVER HIGHWAYS OR RAILROADS**	PART 2 DATE: 06Feb2012 SHEET 2 of 8 FILE NO. 17.12-2

BRIDGES OVER HIGHWAYS OR RAILROADS (Cont.'d):

For conventional abutment with deck slab extension:

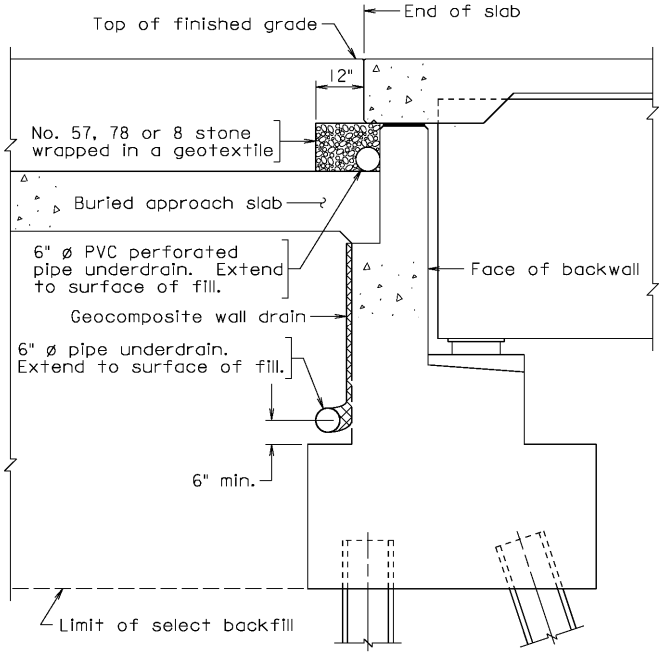

SECTION THROUGH ABUTMENT

For conventional shelf/cantilever abutments:

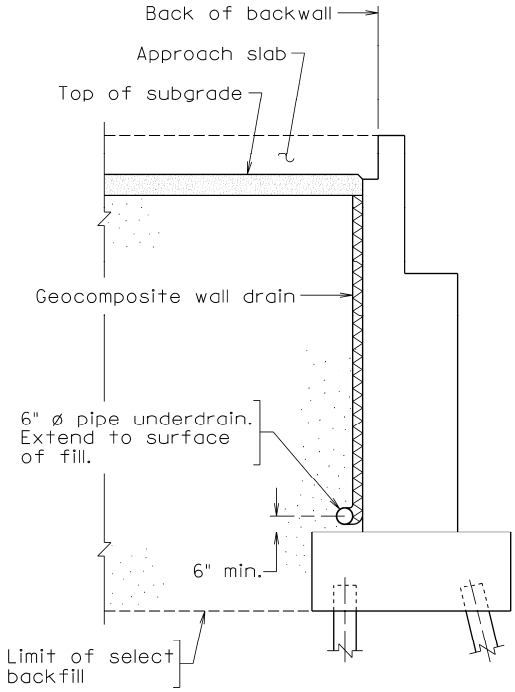

SECTION THROUGH ABUTMENT

BRIDGES OVER STREAMS:

For full integral abutments:

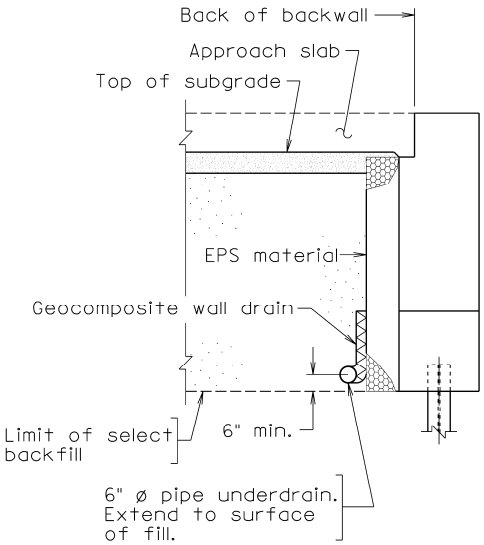

SECTION THROUGH ABUTMENT

For semi-integral abutments:

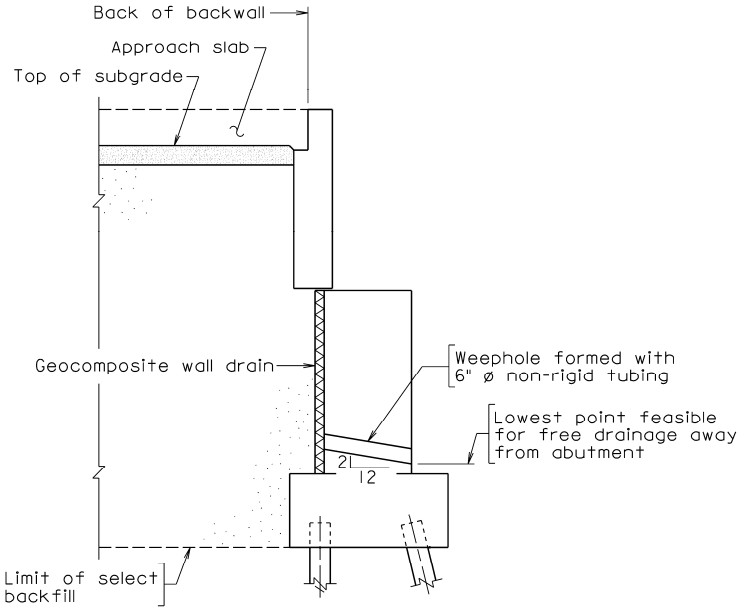

SECTION THROUGH ABUTMENT

ABUTMENTS **ABUTMENT DRAINAGE** **BRIDGES OVER STREAMS**	PART 2 DATE: 06Feb2012 SHEET 4 of 8 FILE NO. 17.12-4

BRIDGES OVER STREAMS (cont.'d):

For conventional abutment with deck slab extension:

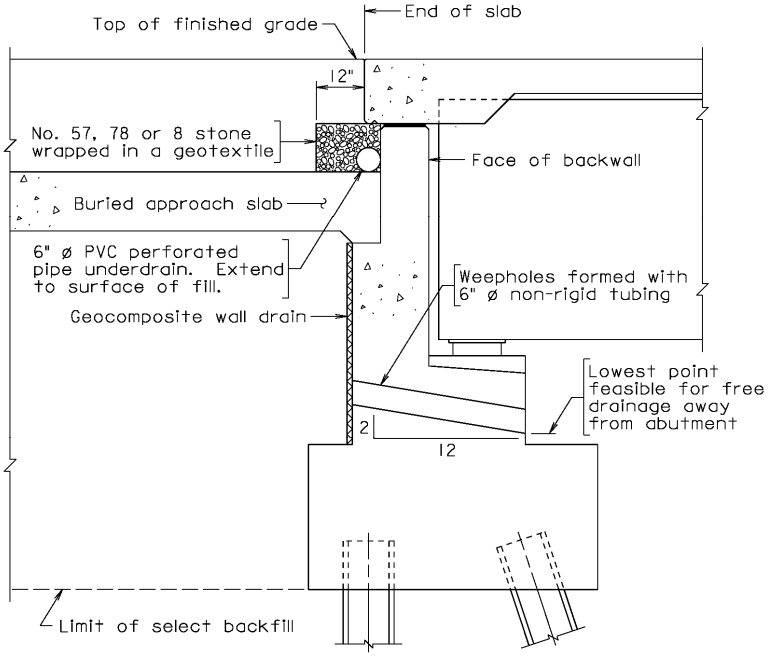

SECTION THROUGH ABUTMENT

For conventional shelf/cantilever abutments:

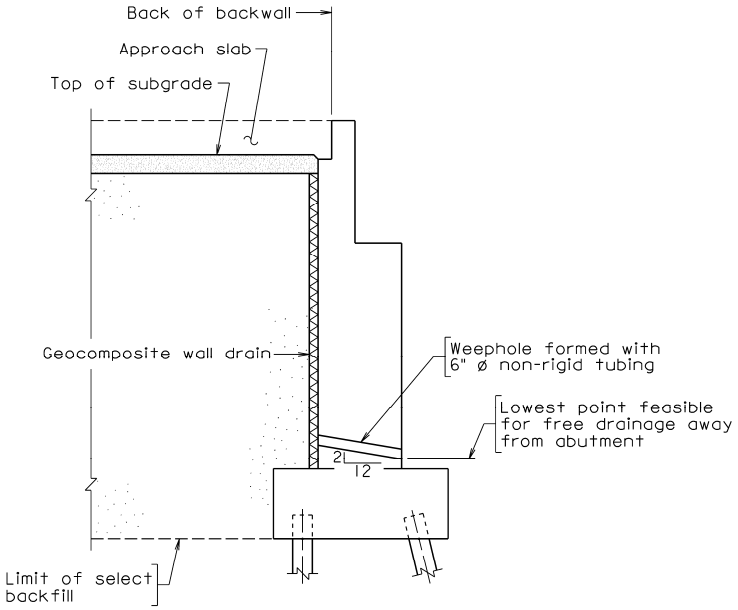

SECTION THROUGH ABUTMENT

ABUTMENTS **ABUTMENT DRAINAGE** **BRIDGES OVER STREAMS**	PART 2 DATE: 17Aug2016 SHEET 5 of 8 FILE NO. 17.12-5

ABUTMENT DRAINAGE FOR DECK SLAB EXTENSIONS:

The details shown below apply only to abutments with deck slab extensions when buried approach slabs are required.

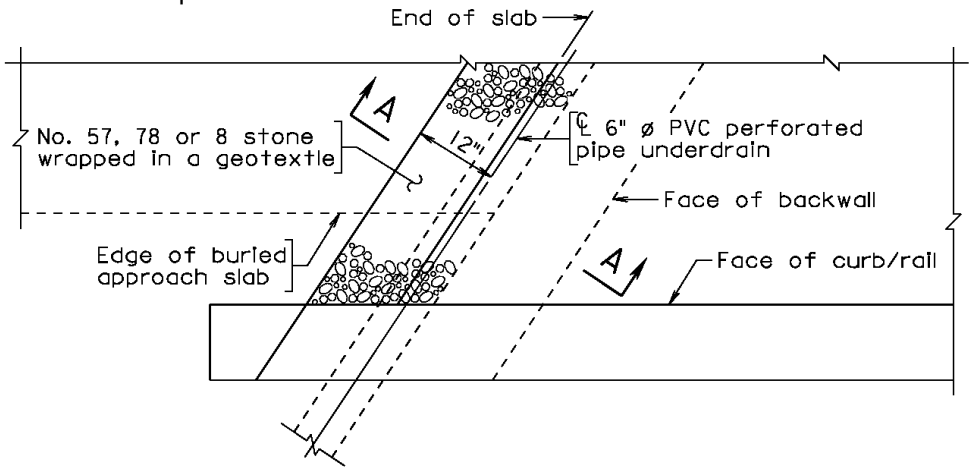

PARTIAL PLAN – PVC PERFORATED PIPE UNDERDRAIN
FOR BURIED APPROACH SLABS

Dimension shall be three feet beyond edge of pavement as a minimum. The approach slab shall be kept one foot from face of curb/rail.

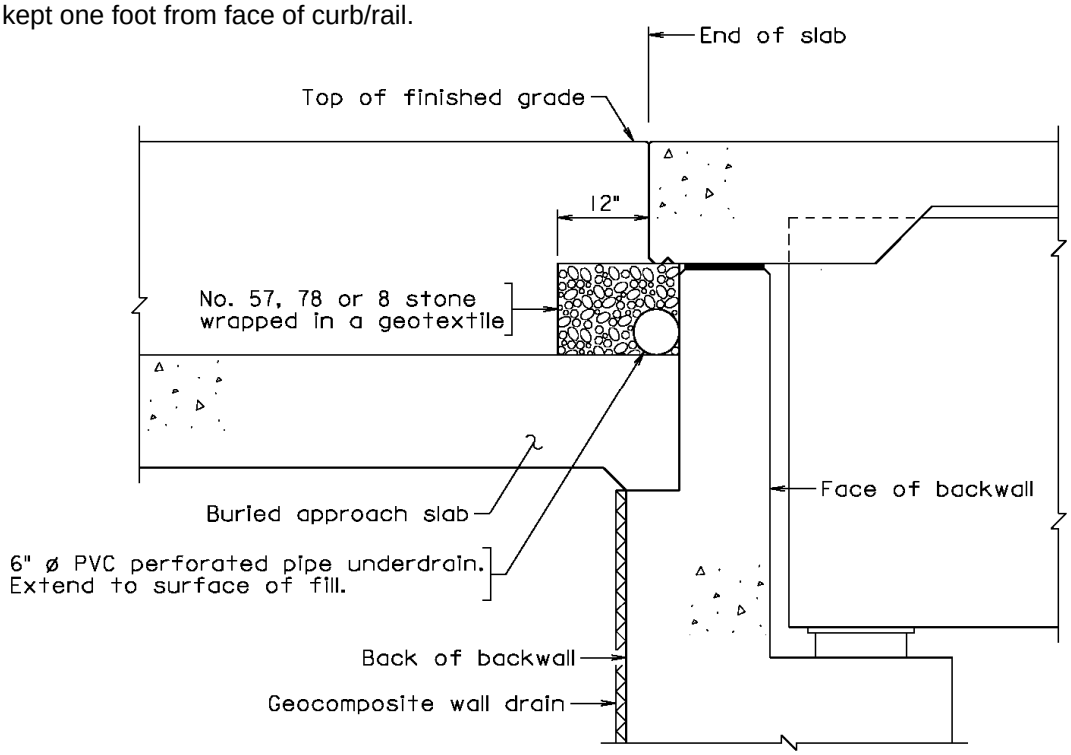

SECTION A-A

ABUTMENTS **ABUTMENT DRAINAGE** **ABUTMENT DRAIN DETAILS - DECK SLAB EXTENSIONS**	PART 2 DATE: 17Aug2016 SHEET 6 of 8 FILE NO. 17.12-6

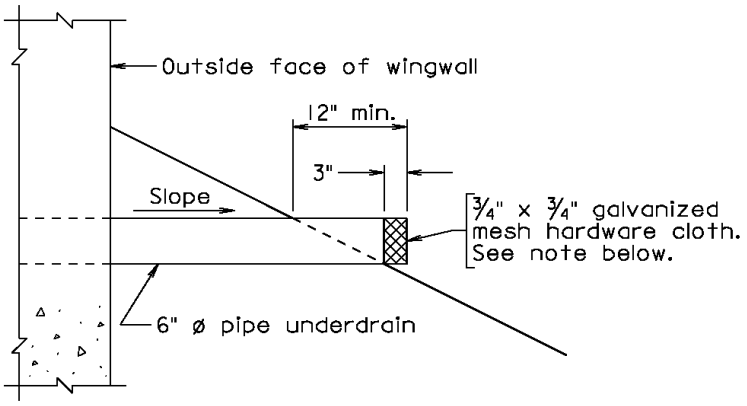

PIPE UNDERDRAIN END DETAIL

The galvanized mesh hardware cloth shall be minimum 17 ga. Crimp around outlet end and secure with galvanized steel wire. Cost of hardware cloth shall be included in the bid price for 6" diameter pipe underdrain.

PLAN NOTES FOR DECK SLAB EXTENSIONS WITH BURIED APPROACH SLABS:

When buried approach slabs are used with deck slab extensions, the following notes shall be added to the detail plan sheet:

PVC perforated pipe underdrain shall conform to the requirements of Section 232 of the VDOT *Road and Bridge Specifications*.

The pipe underdrain shall follow the cross slope of the roadway over the approach slab. The pipe underdrain shall extend to 12" past the edge of the side slope and be located to provide free drainage away from the structure. The slope towards the side slopes shall be no less than two percent (2%). No. 57, 78 or 8 stone shall be placed around the pipe underdrain and wrapped in a geotextile as detailed and as directed by the Engineer. The stone shall extend 12" inches off the end of the deck extension over the buried approach slab and then 18" off the end of deck extension to the outside edge of wings.

The cost of perforated pipe underdrain, No. 57, 78 or 8 stone and geotextile shall be included in the cost of concrete for the approach slab. The bid price shall include all costs for labor, tools, materials, equipment, and incidentals required for the satisfactory completion of the work shown on the plans.

PLAN NOTES FOR DECK SLAB EXTENSIONS WITHOUT APPROACH SLABS:

When approach slabs are not used with deck slab extensions, the following note shall be added to the detail plan sheet:

The cost of No. 57, 78 or 8 stone and geotextile shall be included in the cost of geocomposite wall drain. The bid price shall include all costs for labor, tools, materials, equipment, and incidentals required for the satisfactory completion of the work shown on the plans.

This sheet is intentionally left blank

ABUTMENTS **ABUTMENT DRAINAGE** **ABUTMENT DRAIN DETAILS - DECK SLAB EXTENSIONS**	PART 2 DATE: 06Feb2012 SHEET 8 of 8 FILE NO. 17.12-8

GENERAL INFORMATION:

This section establishes the requirements for select backfill material which shall be used behind all abutments.

All backfill materials should be granular, free-draining materials. Where walls retain in-situ cohesive soils, drainage shall be provided to reduce hydrostatic water pressure behind the wall. In cut situations, material removed with strength characteristics equal to or greater than the select backfill material may be used in lieu of select backfill material specified herein.

Structural excavation/backfilling shall conform to the requirements set forth in Section 401 of the Road and Bridge Specifications.

Quantities for select backfill material and structure excavation shall be entered in the Estimated Quantities table in the plans.

For abutment drainage, see File Nos. 17.12-1 thru -8.

LIMITS OF SELECT BACKFILL MATERIAL DETAIL:

Definitions:

L = Length of approach slab

H = Average height of abutment

B = Distance from back of backwall to back of footing

A = Depth below top of pavement to subgrade or depth of approach slab

E = 1.5(H-A) for $1^1/_2$": 1 approach slopes
= 2.0(H-A) for 2: 1 approach slopes

D(w/o approach slab) = 1'-6" for abutment foundation on rock
= 10'-0" for abutment foundation on soil or piles

D(w/ approach slab) shall be the larger of the following:

a) 1'-6" for abutment foundation on rock
10'-0" for abutment foundation on soil or piles

b) L + 7.5 - 1.5(H - A) for $1^1/_2$": 1 approach embankment slope (ft)
L + 10 - B - 2(H - A) for 2: 1 approach embankment slope (ft)

The limits of select backfill placement shown in this section may be modified to meet specific or special project geometrics with the approval of the District Materials Engineer and the Central Office Structure and Bridge Division Geotechnical Program Manager.

A detail indicating the limits of the select backfill material with notes shall be included on the abutment plan detail sheets of the bridge plan assembly. For notes, see File No. 17.13-5.

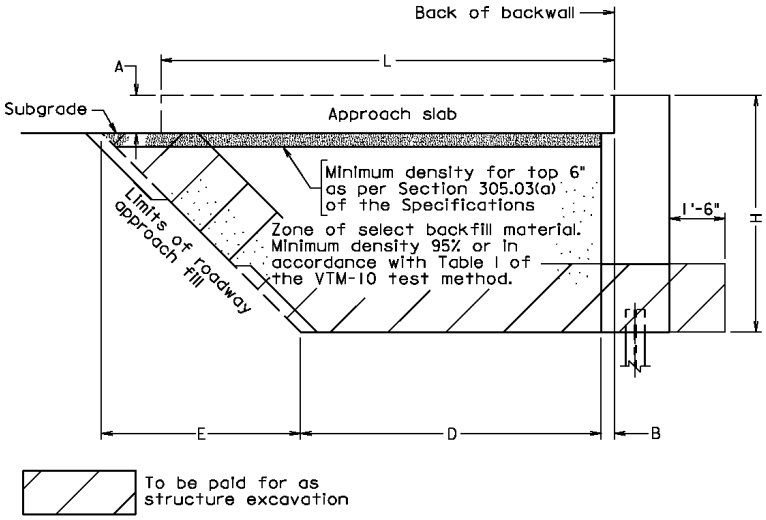

SECTION THROUGH ABUTMENT - FILL SECTION

Abutment drainage not shown

Not to scale

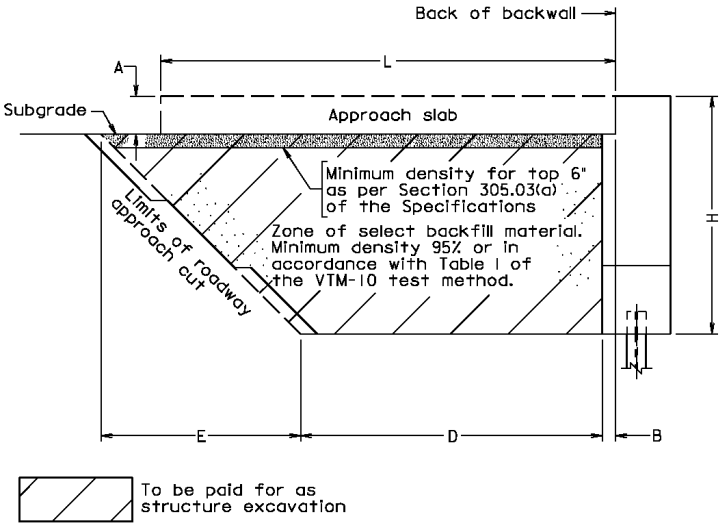

SECTION THROUGH ABUTMENT - CUT SECTION

Abutment drainage not shown

Not to scale

ABUTMENTS **SELECT BACKFILL MATERIAL REQUIREMENTS** **GENERAL INFORMATION**	PART 2 DATE: 15Oct2015 SHEET 2 of 8 FILE NO. 17.13-2

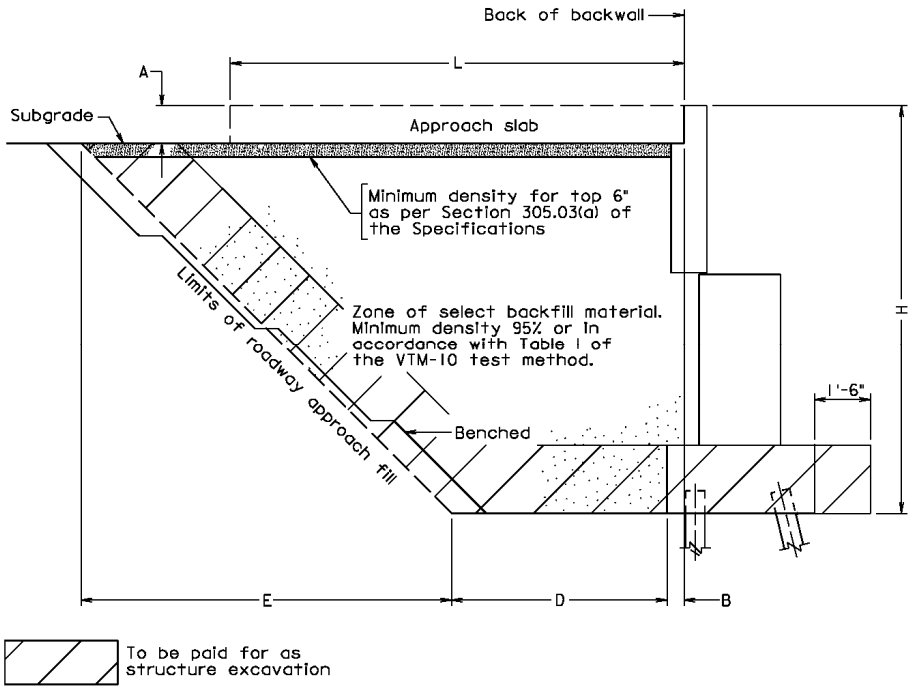

SECTION THROUGH ABUTMENT - FILL SECTION

Abutment drainage not shown

Not to scale

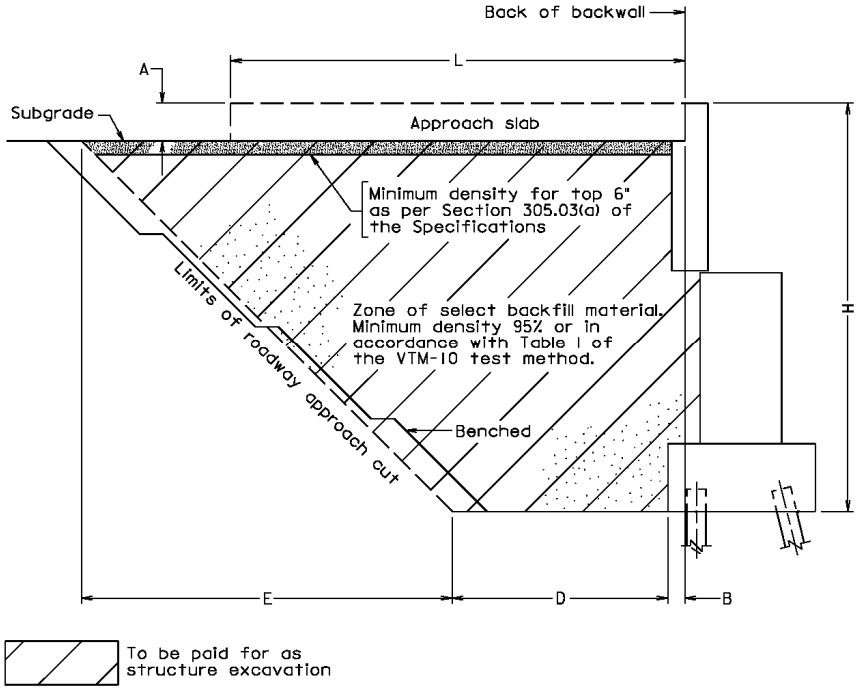

SECTION THROUGH ABUTMENT - CUT SECTION

Abutment drainage not shown

Not to scale

ABUTMENTS **SELECT BACKFILL MATERIAL REQUIREMENTS** **GENERAL INFORMATION**	PART 2 DATE: 15Oct2015 SHEET 3 of 8 FILE NO. 17.13-3

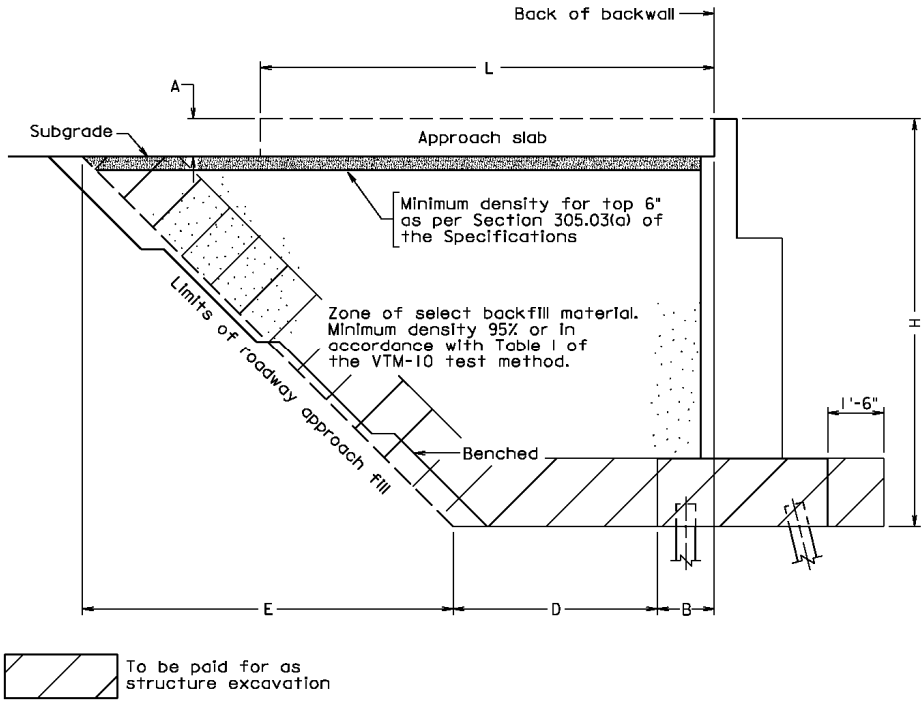

SECTION THROUGH ABUTMENT - FILL SECTION

Abutment drainage not shown

Not to scale

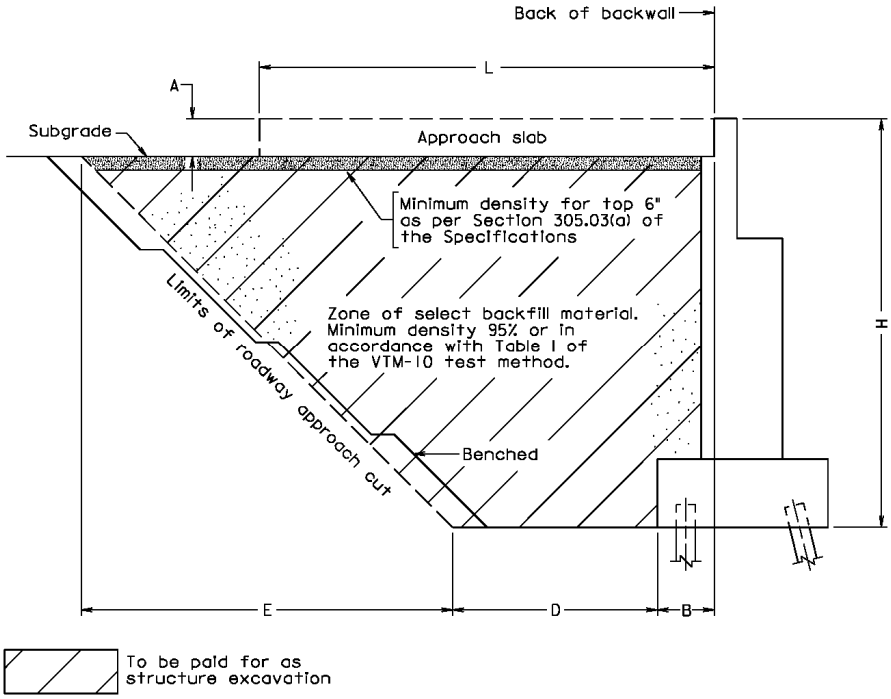

SECTION THROUGH ABUTMENT - CUT SECTION

Abutment drainage not shown

Not to scale

ABUTMENTS **SELECT BACKFILL MATERIAL REQUIREMENTS** **GENERAL INFORMATION**	PART 2 DATE: 15Oct2015 SHEET 4 of 8 FILE NO. 17.13-4

S&B STANDARD CELL DETAIL:

Standard cells (**SBC1**, **SBC2**, **SBC3**, **SBF1**, **SBF2** and **SBF3**) for the details on previous sheets are available in the bdetails1.cell library. See Chapter 1 for cell library. Modify cell as needed. Delete piles and approach slab if not used and add the dimensions A, B, D, E, H and L. Dimension L is shown only when there is an approach slab.

The following notes are part of the cell and are to be placed in the upper right hand corner of the plan sheet:

> Material in the abutment select backfill zone shall be Select Material Type I, minimum CBR 30, and shall be compacted in accordance with Sections 303 and 305 of the VDOT *Road and Bridge Specifications*. 21A or 21B may be substituted for Select Material Type 1, minimum CBR 30, at no additional cost to the Department.
>
> In cut situations, material with strength characteristics greater than the select backfill may be left in place.
>
> The final depth A of the embankment side slopes shall be regular embankment material placed and finished as required.
>
> The estimated quantity given for the abutment select backfill zone has been reduced by the estimated quantity of MSE wall backfill in the zone. ((Note to be used when MSE walls compose all or part of the abutment.))
>
> At the Contractor's option and at no additional cost to the Department, the MSE wall backfill may be used for the entire abutment select backfill zone in lieu of Select Material Type 1, minimum CBR 30. If the MSE wall backfill is #8 or coarser, a separator fabric shall be used between the MSE wall backfill and roadway subgrade, and between the select backfill and the approach roadway cut or fill. The separator fabric shall be needle-punched, non-woven geotextile in accordance with Section 245.03 (d)2 of the Specifications or in accordance with the Special Provision located in VDOT's *Manual of the Structure and Bridge Division*, Part 2, File No. 17.13-8 at no additional cost when utilizing this option. ((Note to be used when MSE walls compose all or part of the abutment.))

Information in double parentheses is for designer information only and shall not be placed on the plan sheet.

DESIGN AND ESTIMATED QUANTITIES:

The bid item for select backfill shall be "Select Backfill (Abutment Zone)" regardless of whether the Contractor eventually uses 21A, 21B or Select Material Type 1, minimum CBR 30. The estimated quantity shall be measured in tons and shall be included as a bid item in the Estimated Quantity Table on the bridge plans.

Quantities for structure excavation shall include existing material that must be removed for replacement with select backfill. See File Nos. 17.13-1 thru -4.

For design and estimating quantities, the following shall be used:

Unit weight of in-place Select Material Type I: 145 pcf; Soil friction angle (ø): 38°

Friction angle for dissimilar materials/wall friction (δ): 25º

Equivalent fluid pressure: Vertical pressure (P_v) = 14 psf; Horiz. pressure (P_h) = 29 psf

For the purpose of computing estimated quantities, the following diagrams may be used:

For each diagram, the letter “W” represents the width of the abutment. See File No. 17.13 -1 for explanation of the remaining letter designations. Where expanded polystyrene (EPS) is used behind full integral or semi-integral abutments, the calculated volume of select backfill shall be reduced by the estimated volume of the EPS material in the zone.

- When elephant ear wings are utilitized:

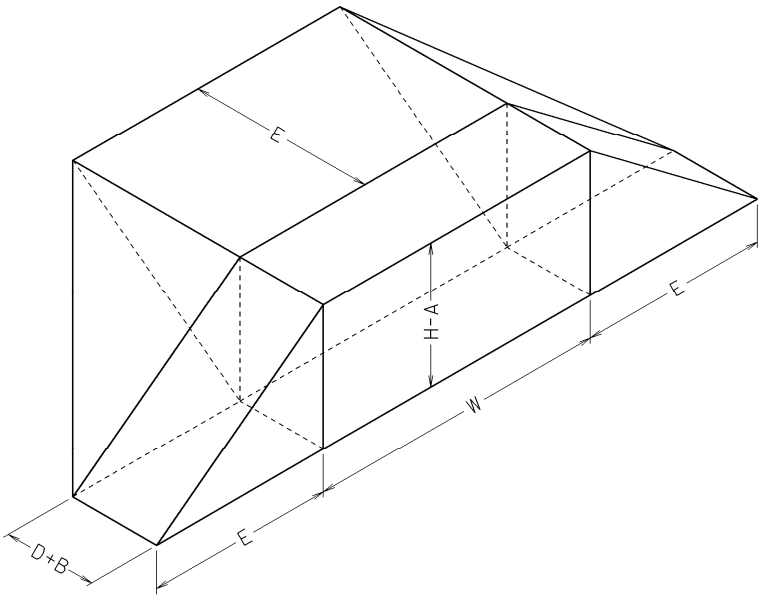

VIEW

- When U-back wings are utilitized:

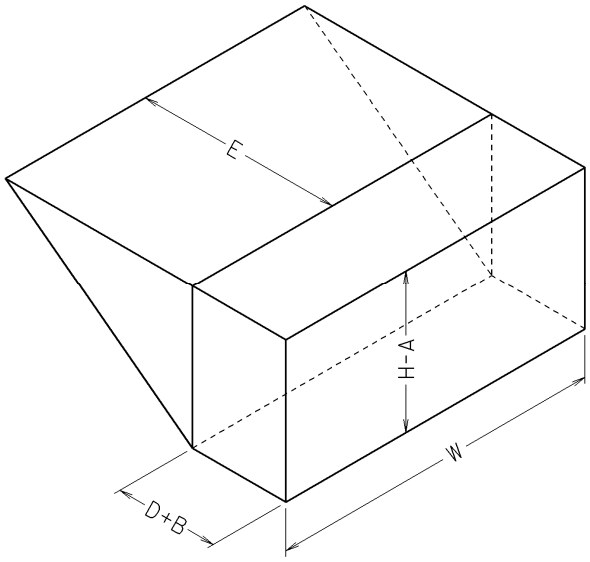

VIEW

- When MSE walls are utilitized as U-back wings:

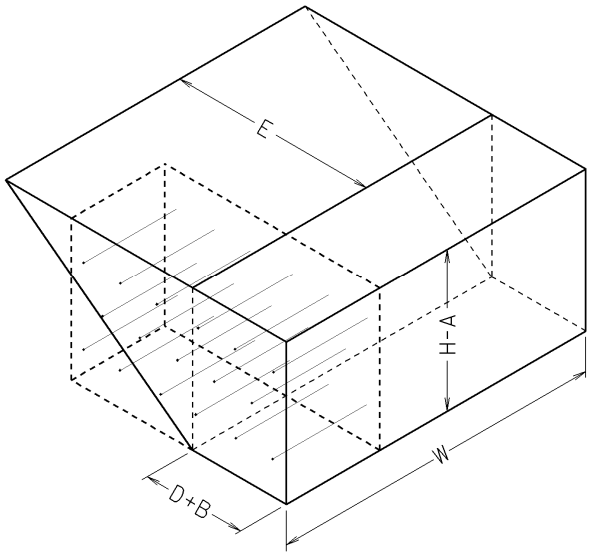

VIEW

When MSE walls are used as U-back wings, the calculated volume of select backfill shall be reduced by the estimated volume of the MSE wall backfill in the zone.

VIRGINIA DEPARTMENT OF TRANSPORTATION
SPECIAL PROVISION FOR
NEEDLE-PUNCHED, NON-WOVEN GEOTEXTILE STABILIZATION FABRIC

September 12, 2014

I. DESCRIPTION

This work shall consist of furnishing and placing needle-punched, non-woven geotextile stabilization fabric in accordance with these specifications, as shown on the plans, or as directed by the Engineer.

II. MATERIAL

The fabric shall be a needle-punched, non-woven geotextile conforming to the following:

Property	ASTM Test Method	Requirements
Grab Strength	D4632	300 lbs @ <50% elongation
Sewn Seam Strength	D4533	270 lbs
Tear Strength	D4533	110 lbs
Puncture Strength	D4833	110 lbs
Burst Strength	D3786	500 psi
Permittivity	D4491	0.05/sec
Apparent Opening Size (AOS)	D4751	0.15 (US sieve #100)
Ultraviolet Stability (Retained Strength)	D4355	50 % after 500 hrs. severe exposure

III. CONSTRUCTION PROCEDURE

The geotextile fabric shall be placed as shown on the plans. Joints shall be made by lapping the end of the placed roll over the new roll a minimum of 30 inches. Overlaps shall be stapled or pinned using 10- to 18- inch nails a minimum of 50 feet on center for parallel rolls and 5 feet on center for roll ends.

The fabric shall be protected from the weather and ultraviolet exposure. Rolls shall be stored a minimum of 12 inches above the ground and covered with a protective cover. Placed fabric shall not be exposed more than two days before being covered. Damage to fabric shall be repaired by patching with a minimum of 3 feet overlapping the damaged area. Construction equipment shall not be permitted directly on the geotextile. Turning of equipment on backfill placed on the geotextile shall be kept to a minimum.

Embankment placed on the geotextile shall be placed in accordance with Section 303 of the Specifications.

IV. PAYMENT

No compensation shall be paid for furnishing, placing, lapping or seaming material and for all materials, labor, tools, equipment and incidentals necessary to complete the work.