TABLE OF CONTENTS - GEOMETRICS

CHAPTER 6

FILE NO.	TITLE	DATE
	TABLE OF CONTENTS AND INTRODUCTION	
06.TOC-1	Table of Contents – Chapter 6	18May2016
06.TOC-2	Table of Contents – Chapter 6	18May2016
06.TOC-3	Table of Contents – Chapter 6	12Sep2014
06.00	Introduction – Chapter 6	12Sep2014
	GENERAL GEOMETRIC CONSIDERATIONS	
06.01-1	General Information	12Sep2014
06.01-2	General Information	12Sep2014
06.01-3	General Information	12Sep2014
06.01-4	General Information	12Sep2014
06.01-5	General Information	12Sep2014
	ROAD CLASSIFICATIONS	
06.02-1	Freeways (Rural or Urban)	15Oct2015
06.02-2	Rural Principal Arterial System	09Jul2012
06.02-3	Rural Minor Arterial System	09Jul2012
06.02-4	Rural Collector Road System	09Jul2012
06.02-5	Rural Local Road System	09Jul2012
06.02-6	Urban Principal Arterial System	09Jul2012
06.02-7	Urban Minor Arterial System	09Jul2012
06.02-8	Urban Minor Arterial System	09Jul2012
06.02-9	Urban Collector Street System	09Jul2012
06.02-10	Urban Collector Street System	09Jul2012
06.02-11	Urban Local Street System	09Jul2012
06.02-12	Urban Local Street System	09Jul2012
06.02-13	Structure with Auxiliary Lane; Ramp Structure	09Jul2012
06.02-14	Structure with Approach Raised Median	14Jun2010
06.02-15	Superstructure or Deck Replacement	12Sep2014
06.02-16	Superstructure or Deck Replacement	10Mar2015

* Indicates 11 x 17 sheet; all others are 8½ x 11.

TABLE OF CONTENTS - GEOMETRICS

CHAPTER 6

FILE NO.	TITLE	DATE
	ADDITIONAL GEOMETRIC CONSIDERATIONS	
06.03-1	Stopping Sight Distance on Curved Structures	01Oct2013
06.03-2	Stopping Sight Distance on Curved Structures	01Oct2013
06.03-3	Stopping Sight Distance on Curved Structures	14Jun2010
06.03-4	Clear Zone Distances for Roadways w/ Shoulders	01Oct2013
06.03-5	Clear Zone Horizontal Curve Adjustments	01Oct2013
06.03-6	Example Clear Zone Distance Check	14Jun2010
06.03-7	Clear Zone Distances for Roadways with Curb	01Oct2013
	PEDESTRIAN AND / OR BICYCLE FACILITIES	
06.04-1	Types of Facilities	18May2016
06.04-2	Definition of Terms and References	18May2016
06.04-3	Accessibility Requirements	18May2016
06.04-4	Accessibility Requirements	09Jul2012
06.04-5	Accessibility Requirements	09Jul2012
06.04-6	Pedestrian Bridge	18May2016
06.04-7	Shared Use Path (SUP) Bridge	18May2016
06.04-8	Structure with Sidewalk	18May2016
06.04-9	Superelevated Structure with Sidewalk	18May2016
06.04-10	Structure with Bicycle Lane	18May2016
06.04-11	Structure with Bicycle Lane	09Jul2012
06.04-12	Structure with SUP – Roadway with Curb	18May2016
06.04-13	Structure with SUP – Roadway with Shoulder	18May2016
06.04-14	Notes for Structure with Shared Use Path	18May2016
06.04-15	Notes for Structure with Shared Use Path	09Jul2012
06.04-16	Superelevated Structure with SUP - Barrier	18May2016
06.04-17	Superelevated Structure with SUP - Curb	18May2016
06.04-18	Superelevated Structure with SUP - Shoulder	18May2016

* Indicates 11 x 17 sheet; all others are 8½ x 11

TABLE OF CONTENTS - GEOMETRICS

CHAPTER 6

FILE NO.	TITLE	DATE
	HOV FACILITIES ON FREEWAYS	
06.05-1	General HOV Information and Notes	14Jun2010
06.05-2	Non-Separated Concurrent Flow HOV (Freeways)	14Jun2010
06.05-3	Non-Separated Concurrent Flow HOV With Buffer (Freeways)	14Jun2010
06.05-4	Barrier-Separated Reversible HOV – Two-Lane	14Jun2010
06.05-5	Barrier-Separated Reversible HOV – Single Lane	14Jun2010
	BRIDGES OVER RAILROADS	
06.06-1	Clearances	21Aug2009
06.06-2	Clearances	21Aug2009
06.06-3	Crash Wall Requirements	14Jun2010
06.06-4	Crash Wall Requirements	01Oct2013
	APPROACH SLABS	
06.07-1	Approach Slabs	09Jul2012
06.07-2	Approach Slabs	12Sep2014
06.07-3	Approach Slabs	09Jul2012
06.07-4	Approach Slabs	09Jul2012
	BRIDGE ONLY PROJECT CONSIDERATIONS	
06.08-1	General Information and Project Limits	01Oct2013
06.08-2	Bridge Approach Pavement Widening	01Oct2013
06.08-3	Existing Guardrail at Location - Termination	01Oct2013
06.08-4	Existing Guardrail at Location – Project Limits	01Oct2013
06.08-5	No Existing Guardrail at Location - Termination	01Oct2013
06.08-6	No Existing Guardrail at Location – Project Limits	01Oct2013
06.08-7	Miscellaneous Guardrail/Termination Information	01Oct2013
06.08-8	Project Limits and Parapet/Rail Termination Examples	01Oct2013
06.08-9	Project Limits and Parapet/Rail Termination Examples	01Oct2013
06.08-10	Project Limits and Parapet/Rail Termination Examples	01Oct2013
06.08-11	Project Limits and Parapet/Rail Termination Examples	01Oct2013

* Indicates 11 x 17 sheet; all others are 8½ x 11.

GENERAL PROCEDURES

Chapter 6 of this manual establishes the practices for geometric layout of bridges.

Several major changes to past practices are as follows:

1. Revised decision maker to District Structure and Bridge Engineer for projects under design in Implementation.

2. Extended vertical clearance requirements to include potential future widening of bridge by one lane.

3. Removed design waiver requirement where design geometrics are exceeded, changed exception list to example list and added fourth example case where increase in geometrics is warranted.

4. Split geometric design waiver approval authority between State and District Structure and Bridge Engineers for projects based on System and design year ADT.

5. Removed design exception/waiver form information and referenced Part 1 – Section Pre.02 of this manual for complete design exception/waiver information.

6. Moved one-lane bridge content under design waivers and updated accordingly.

NOTE:
Due to various restrictions on placing files in this manual onto the Internet, portions of the drawings shown do not necessarily reflect the correct line weights, line types, fonts, arrowheads, etc. Wherever discrepancies occur, the written text shall take precedence over any of the drawn views.

Implementation: All projects shall adhere to current geometrics at time of preliminary design approval. All shelved projects with approved preliminary plans shall be updated to current geometrics prior to proceeding with design. For projects under design, the District Structure and Bridge Engineer shall determine whether updating for revisions of the geometrics is feasible based on possible impact to the project. If the decision is made not to update to current geometrics, a design exception/waiver is required.

Notes:

A. Approach pavement width:

P denotes approach pavement width.

If the approach pavement requires widening because of horizontal curvature, the bridge roadway width is to be adjusted, in 6" increments, by the amount of curve widening given in the road design standards or as shown on the road plans.

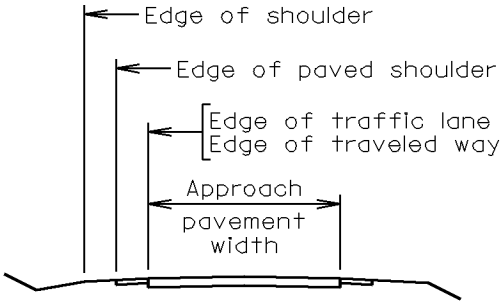

In the case of side-by-side prestressed members, the face-to-face of curb width may be adjusted as necessary. If an adjustment would result in a width less than the normal width (plus curve widening), a design exception/waiver is required.

B. Temporary detour:

Temporary bridge width = clear roadway width plus 4 feet between face of rails/curbs.

Proper attention shall be given to maintenance of pedestrian and/or bicycle traffic where facilities exist. See AASHTO *Guide for the Planning, Design, and Operation of Pedestrian Facilities*, 2004, Chapter 4.

C. Slopes:

All slopes shown in this chapter are rise : run. A 1 : 1 ½ slope may not achieve a factor of safety of 1.5 with respect to slope stability. Confirm 1 : 1 ½ slope use with the District Materials Engineer prior to preliminary approval (TS&L).

Slopes in front of abutments:

When road underneath is:

1. In cut section, continue the cut slope thru the bridge area.
2. Freeway, use 1 : 2 slope.
3. For non-freeway fills, use 1 : 1½ slope in front of abutments and transition to match approach fill.
4. In urban area, 1 : 2 slope may be used for aesthetic reasons.
5. In partial fill and partial cut or in shallow cuts, a study shall be made to determine the appropriate slope.

For bridges over railroads, see File Nos. 06.06-1 and -2.

For bridges over streams, use 1 : 1½ slope

For continuation of notes, see next sheet

Notes (continued):

D. Toe of fill:

The toe of fill slope in front of the bridge abutment shall be located considering the road/railroad typical section, pedestrian and/or bicycle facilities, drainage, future widening requirements, hydraulic opening and constructability where applicable.

Toe of fill for abutments should be located at or beyond the clear zone distances shown in Table 1 of File No. 06.03-4, but tying the toe of fill into the back of drainage channel is generally acceptable. For cross sections with traversable ditches, increased clearances to the toe of fill may be required and should be coordinated with the road designer.

E. Single versus separate structures:

In general:

1. Where median width “m” is less than 20 feet, use a single bridge.
2. Where “m” is between 20 and 30 feet, consider using a single bridge versus separate bridges.
3. Where “m” exceeds 30 feet, use separate bridges. Coordinate the change from road cross section to bridge cross section with road designer.
4. Where separate bridges are used, consider using a single abutment.

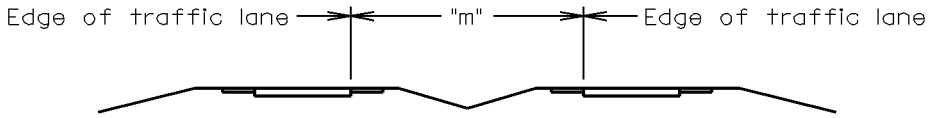

F. Bridge superstructure and deck replacement projects: See File No. 06.02-15.

G. Horizontal clearance:

Horizontal clearances shown in File Nos. 06.02-1 thru -11 are from the edge of the thru lanes for the given road classification under a bridge structure. Guardrail/median barrier notes provided are for use with piers designed for collision force.

The minimum horizontal clearance from the edge of an auxiliary lane shall not be less than that required for a thru lane with a design speed and design ADT equal to the design speed and design ADT of the auxiliary lane. If such clearance is not economically justified, a guardrail or median barrier shall be used. The bridge designer shall verify the design speed and design ADT for the auxiliary lane with the road designer.

The horizontal clearances shown do not necessarily apply for highways under railroad bridges. See File Nos. 06.06-1 and -2.

H. Vertical clearance:

The minimum vertical clearances specified in File Nos. 06.02-1 thru -12 are the minimum required clear height of the structure above pavements and shoulders for the given road classification under a bridge structure assuming the bridge will be widened by one lane on both sides unless the potential future widening direction is specifically known.

Minimum vertical clearance of 18’-6” shall be provided for roadways, bridges or other structures under straddle bents, integral straddle bents and integral pier caps.

For continuation of notes, see next sheet.

Notes (continued):

H. Vertical clearance: (cont'd)

Minimum vertical clearance of 10 feet is required over abandoned railway lines where the potential exists for conversion to a pedestrian and/or bicycle facility.

I. Design year for estimating traffic volume:

Ad date + 11 years for Rural Minor Collector and Urban Collector for restoration in kind or minor improvements; and for all Rural Local and all Urban Local functional classifications.

Ad date + 15 years for RRR projects and superstructure replacement projects.

Ad date + 22 years for Rural Minor Collector and Urban Collector for new construction of major improvements or expansion of the facility; and all roads in the National Highway System (NHS), all Freeways, all Rural and Urban Arterial, and all Rural Major Collector functional classifications.

J. Design speed:

The design speed for use with this chapter shall be as shown on the Title Sheet of the Road plans for the roadway section pertaining to the bridge location.

When the design speed is $\leq$ 45 mph and 6" curb without a sidewalk is shown on the roadway typical section, 4" high curb must be used adjacent to the bridge ends to allow fixed object attachment. Coordinate with the road designer to ensure 4" high curb is used adjacent to the bridge and transitioned back to the 6" high curb at a logical terminus at each end. See VDOT *Road Design Manual*, Appendix A, Section A-3.

K. Sidewalk:

Curbed sidewalks shall not be used adjacent to traffic where the design speed exceeds 45 mph. In such case, a traffic barrier shall separate the traveled way and the walkway. For barrier separated sidewalk, see VDOT *Road Design Manual*, Appendix A, Section A-5 for barrier termination details and File Nos. 06.07-2 thru -3 for additional information when used in conjunction with approach slabs.

When a barrier is used and the approach raised sidewalk or shared use path is not continued on the bridge (i.e. at grade on bridge), the bridge designer shall consult with the road designer on the method of transition from a curb section to a shoulder section.

L. Retaining walls:

Retaining wall adjacent to roadway:

Where retaining walls are used on bridge approaches adjacent to the roadway, the crash-tested barrier shape used on the bridge shall be extended along the retaining wall. For gravity or cantilever walls, the barrier shall be attached to the top of wall. For MSE walls, the barrier shall be incorporated into a moment slab. For a soldier pile wall, traffic barrier shall be used a sufficient distance from the wall. Guardrail shall not be used.

For continuation of notes, see next sheet.

Notes (continued):

L. Retaining walls: (cont'd)

Retaining wall with pedestrian rail:

See Standard HR-1 of VDOT *Road and Bridge Standards*. If the wall is in the bridge contract, include railing in the bridge quantities. The bridge designer shall coordinate with the road designer on the rail details if additional retaining walls are included in the road contract. Use of Standard HR-1 requires modification for 54" rail height.

M. Accessibility guidelines for pedestrian and/or bicycle facilities:

Pedestrian and/or bicycle facilities shall be accessible to people with disabilities in accordance with the Americans with Disabilities Act (ADA) and related federal and state policies. This design criteria applies to all construction projects. See VDOT's *Policy for Integrating Bicycle and Pedestrian Accommodations* and the *Americans with Disabilities Act Standards for Accessible Design.*

N. Fencing (Pedestrian): See Chapter 30 of this manual.

O. Resurfacing, restoration, and rehabilitation (RRR) projects:

For superstructure or deck replacement, see File No. 06.02-15.

For total bridge replacement on rural local road system, see File No. 06.02-5.

For total bridge replacement on all other systems, a Design exception/waiver will be required for geometrics less than noted in this chapter.

P. Design exceptions/waivers/approvals for design geometrics:

Design geometrics that do not meet the established standards for bridge width, horizontal clearance and vertical clearance will require either a design exception or a design waiver. Known design exceptions/waivers shall be obtained prior to preliminary design approval.

Design exceptions:

When the design geometrics do not meet those noted in the current AASHTO *A Policy on Geometric Design of Highways and Streets* or other AASHTO minimums, the designer is required to submit a design exception to the State Structure and Bridge Engineer.

For all interstate structures, structures over Interstates and selected Federal Oversight projects, approval from the FHWA will also be required. The request will be forwarded to the FHWA if the State Structure and Bridge Engineer approves the design exception by the individual submitting the request.

For complete information on design exception requirements, see Part 1 - Section Pre.02 of this manual.

For continuation of notes, see next sheet.

Notes (continued):

P. Design exceptions/waivers/approvals: (Cont'd)

Design waivers:

When the design geometrics meet or exceed the AASHTO *A Policy on Geometric Design of Highways and Streets* or other AASHTO minimums, but are less than the geometrics noted in this chapter, the designer is required to submit a design waiver.

Design waivers are not required when design geometrics exceed those noted in this chapter. The following cases are examples of where increases in design geometrics are warranted:

1. Increased bridge width due to minimum number of lanes and/or lane width to be maintained during staged construction.
2. Increased bridge width for precast voided slab / box beam bridges in order to use standard width shapes.
3. Increased bridge width for horizontal site distance.
4. Increased bridge width to simplify the design and/or construction for structures with flat curve geometrics (i.e., straight in lieu of curved alignment on the bridge).

Geometric design waivers for projects on the Secondary System where design year ADT $\leq$ 750 require approval of the District Structure and Bridge Engineer which includes the use of RRR or Very Low-Volume (design year ADT $\leq$ 400) standards.

Geometric design waivers for projects on Interstate, Primary and Secondary (where design year ADT > 750) require approval of the State Structure and Bridge Engineer.

One-lane bridges:

VDOT's general policy is not to build one-lane bridges. However, it is recognized that some conditions may warrant a one-lane bridge. One-lane bridges require a design waiver to be approved by the State Structure and Bridge Engineer. In addition to the normal design waiver request, a letter shall be provided from the locality or county requesting the one-lane bridge. Design waivers for one-lane bridges only can be considered when the design year ADT is less than or equal to 400.

One-lane superstructure or deck replacement projects meeting the criteria found on File No. 06.02-15 do not require a design waiver.

For complete information on design waiver requirements, see Part 1 - Section Pre.02 of this manual.

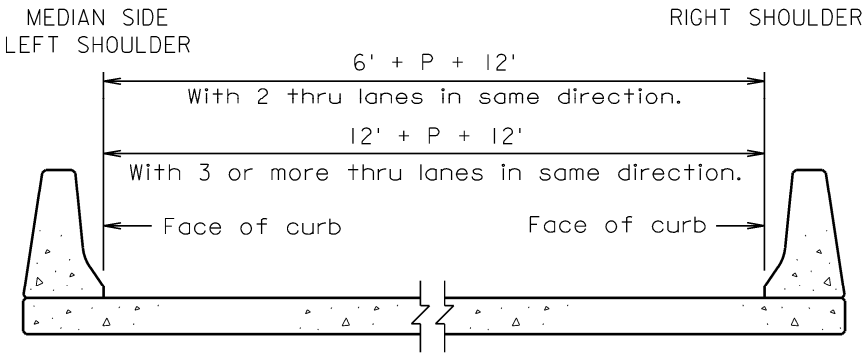

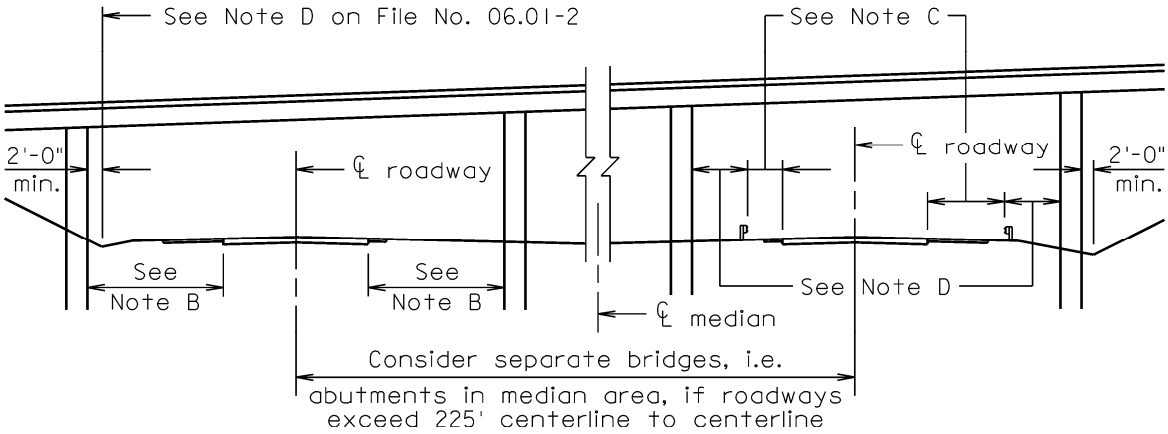

FREEWAYS (RURAL OR URBAN)

Notes:

A. The minimum vertical clearance shall be 16'-6". Vertical clearance less than 16'-6" requires a design exception.

B. The minimum horizontal clearance shall equal or exceed the clear zone distances shown in Table 1 on File No. 06.03-4.

C. Guardrail or median barrier shall be used as shown when the required minimum horizontal clearance cannot be provided or such clearance cannot be economically justified. For guardrail offset, see Tables 1 and 2 on Standard GR-INS, sheet 6 of 8, of VDOT *Road and Bridge Standards*. Offset should be confirmed with the road designer.

D. When required, guardrail shall be located to provide the clearance shown on Standard GR-INS, sheet 3 of 8, of VDOT *Road and Bridge Standards* corresponding to the maximum dynamic deflection of the guardrail being used. The overall dimension shall account for the guardrail width and should be confirmed with the road designer.

E. Freeway is the highest type of arterial highway and is defined as an expressway with full control of access, such as Interstates.

F. For additional requirements for curved bridges and tangent bridges with a horizontal curve located on the roadway at either end, see File No. 06.03-1.

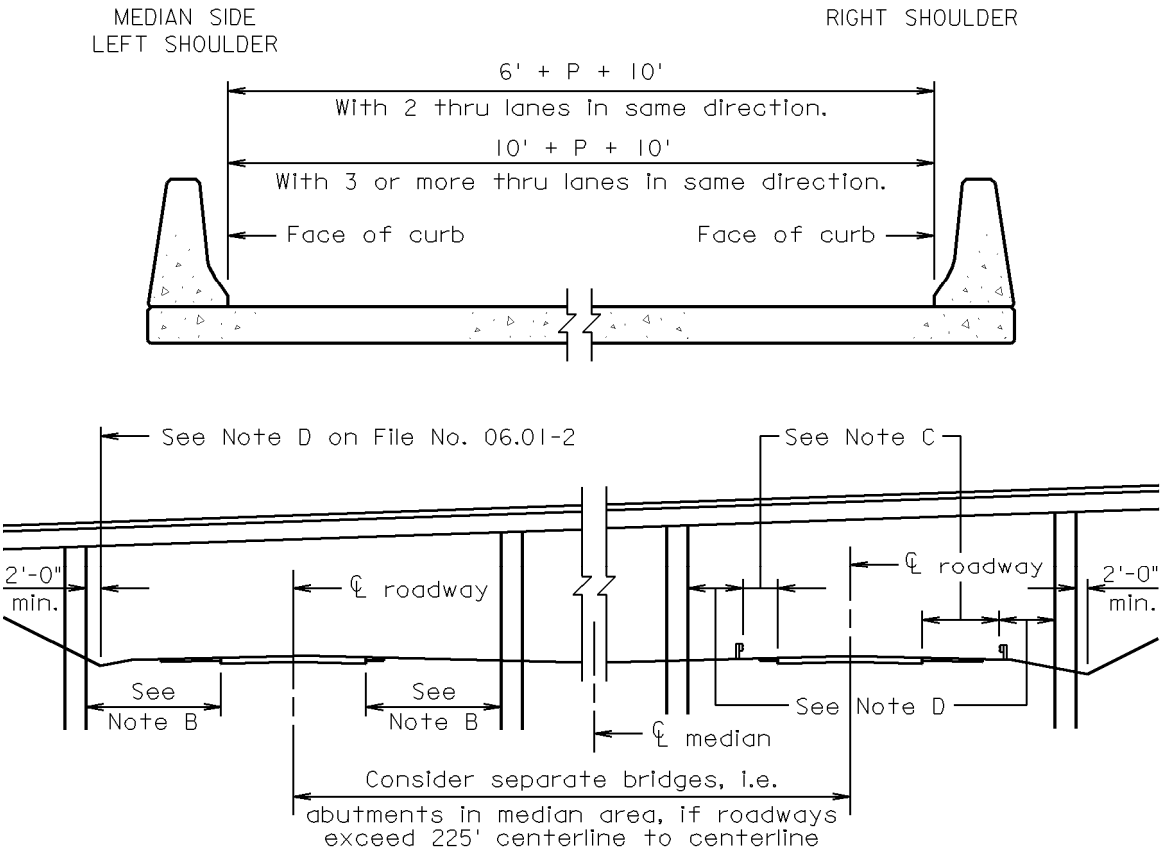

RURAL PRINCIPAL ARTERIAL SYSTEM

Notes:

A. The minimum vertical clearance shall be 16'-6". Vertical clearance less than 16'-6" requires a design exception.

B. The minimum horizontal clearance shall equal or exceed the clear zone distances shown in Table 1 on File No. 06.03-4.

C. Guardrail or median barrier shall be used as shown when the required minimum horizontal clearance cannot be provided or such clearance cannot be economically justified. For guardrail offset, see Tables 1 and 2 on Standard GR-INS, sheet 6 of 8, of VDOT *Road and Bridge Standards*. Offset should be confirmed with the road designer.

D. When required, guardrail shall be located to provide the clearance shown on Standard GR-INS, sheet 3 of 8, of VDOT *Road and Bridge Standards* corresponding to the maximum dynamic deflection of the guardrail being used. The overall dimension shall account for the guardrail width and should be confirmed with the road designer.

E. For additional requirements for curved bridges and tangent bridges with a horizontal curve located on the roadway at either end, see File No. 06.03-1.

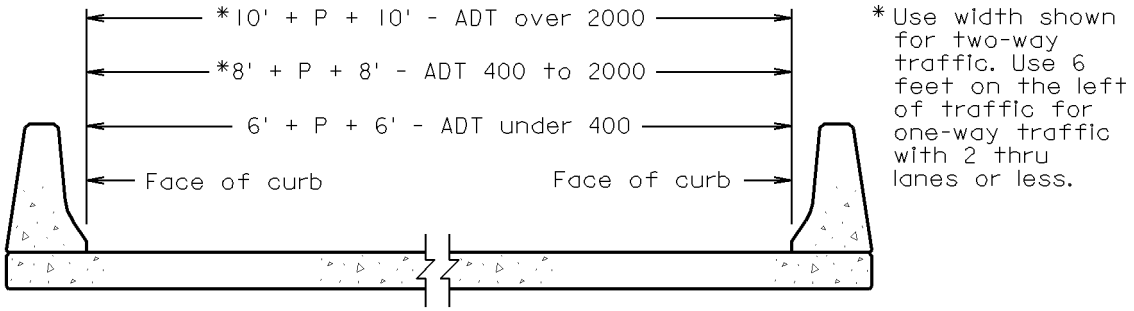

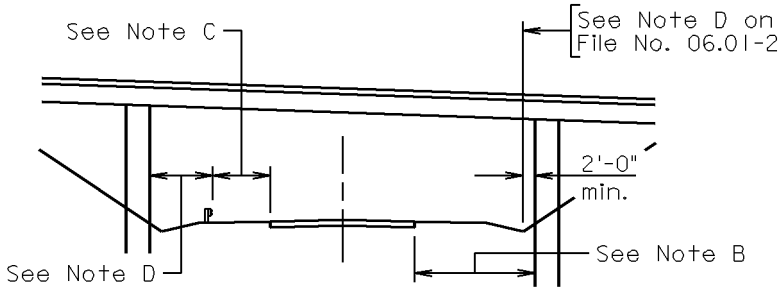

RURAL MINOR ARTERIAL SYSTEM

Notes:

A. The minimum vertical clearance shall be 16'-6". Vertical clearance less than 16'-6" requires a design exception.

B. The minimum horizontal clearance shall equal or exceed the clear zone distances shown in Table 1 on File No. 06.03-4.

C. Guardrail or median barrier shall be used as shown when the required minimum horizontal clearance cannot be provided or such clearance cannot be economically justified. For guardrail offset, see Tables 1 and 2 on Standard GR-INS, sheet 6 of 8, of VDOT *Road and Bridge Standards*. Offset should be confirmed with the road designer.

D. When required, guardrail shall be located to provide the clearance shown on Standard GR-INS, sheet 3 of 8, of VDOT *Road and Bridge Standards* corresponding to the maximum dynamic deflection of the guardrail being used. The overall dimension shall account for the guardrail width and should be confirmed with the road designer.

E. For ADT, use design year traffic. See Note I on File No. 06.01-3.

F. For bridges carrying two-way traffic where an ultimate 4-lane divided is to be built, geometrics shall be approved by the State Structure and Bridge Engineer and coordinated with the roadway designer. 2-lane structures carrying two-way traffic have different shoulder width requirements than 2-lane structures carrying one-way traffic.

G. For additional requirements for curved bridges and tangent bridges with a horizontal curve located on the roadway at either end, see File No. 06.03-1.

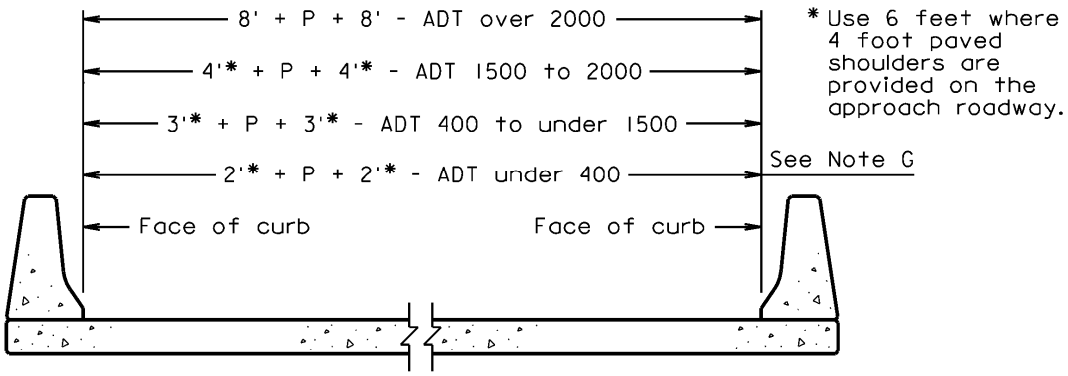

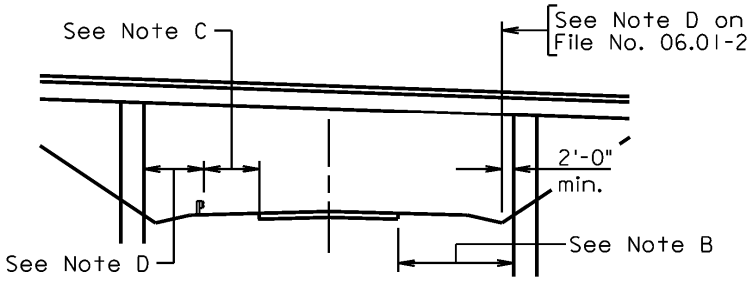

RURAL COLLECTOR ROAD SYSTEM

Notes:

A. The minimum vertical clearance shall be 14'-6" and the desirable 16'-6". Vertical clearance less than 16'-6" but greater than or equal to 14'-6" requires a design waiver. Vertical clearance less than 14'-6" requires a design exception.

B. The minimum horizontal clearance shall equal or exceed the clear zone distances shown in Table 1 on File No. 06.03-4.

C. Guardrail or median barrier shall be used as shown when the required minimum horizontal clearance cannot be provided or such clearance cannot be economically justified. For guardrail offset, see Tables 1 and 2 on Standard GR-INS, sheet 6 of 8, of VDOT *Road and Bridge Standards*. Offset should be confirmed with the road designer.

D. When required, guardrail shall be located to provide the clearance shown on Standard GR-INS, sheet 3 of 8, of VDOT *Road and Bridge Standards* corresponding to the maximum dynamic deflection of the guardrail being used. The overall dimension shall account for the guardrail width and should be confirmed with the road designer.

E. For ADT, use design year traffic. See Note I on File No. 06.01-3.

F. For additional requirements for curved bridges and tangent bridges with a horizontal curve located on the roadway at either end, see File No. 06.03-1.

G. When P is less than 20 feet, the bridge designer, in consultation with the road designer and the residency, may elect to make the distance from face-to-face of curb 24 feet in order to facilitate future maintenance activities. Appropriate documentation shall be kept in the project file.

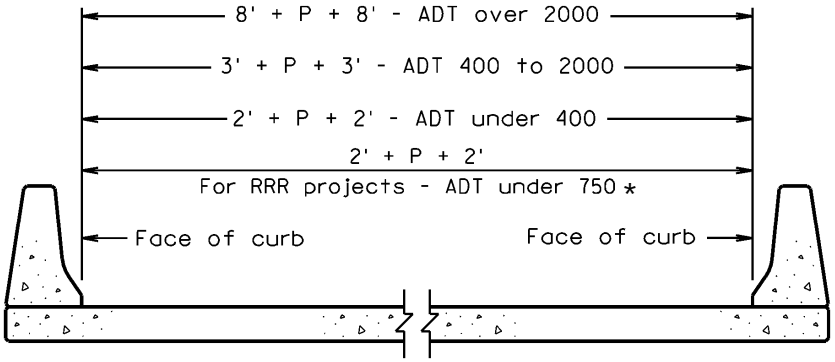

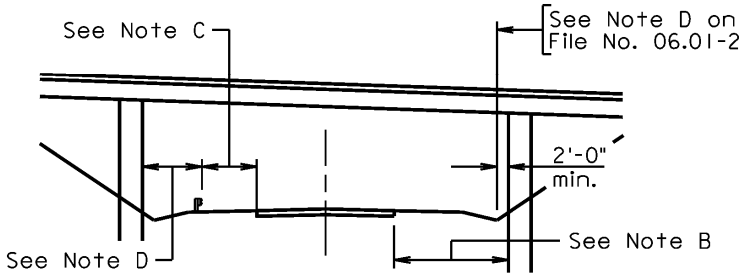

RURAL LOCAL ROAD SYSTEM

* The use of the RRR standards should be decided at the scoping meeting and documented on the scoping report form.

Notes:

A. The minimum vertical clearance shall be 14'-6" and the desirable 16'-6". Vertical clearance less than 16'-6" but greater than or equal to 14'-6" requires a design waiver. Vertical clearance less than 14'-6" requires a design exception.

B. The minimum horizontal clearance shall equal or exceed the clear zone distances shown in Table 1 on File No. 06.03-4.

C. Guardrail or median barrier shall be used as shown when the required minimum horizontal clearance cannot be provided or such clearance cannot be economically justified. For guardrail offset, see Tables 1 and 2 on Standard GR-INS, sheet 6 of 8, of VDOT *Road and Bridge Standards*. Offset should be confirmed with the road designer.

D. When required, guardrail shall be located to provide the clearance shown on Standard GR-INS, sheet 3 of 8, of VDOT *Road and Bridge Standards* corresponding to the maximum dynamic deflection of the guardrail being used. The overall dimension shall account for the guardrail width and should be confirmed with the road designer.

E. For ADT, use design year traffic. See Note I on File No. 06.01-3.

F. For additional requirements for curved bridges and tangent bridges with a horizontal curve located on the roadway at either end, see File No. 06.03-1.

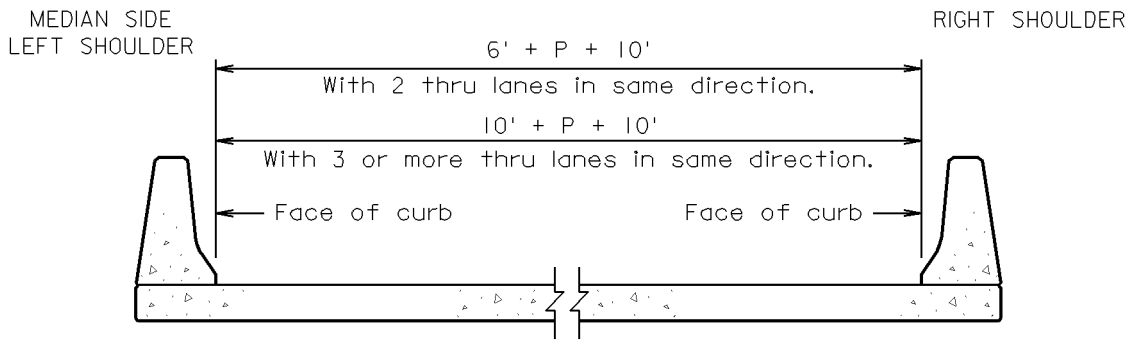

ROADWAY WITH SHOULDER

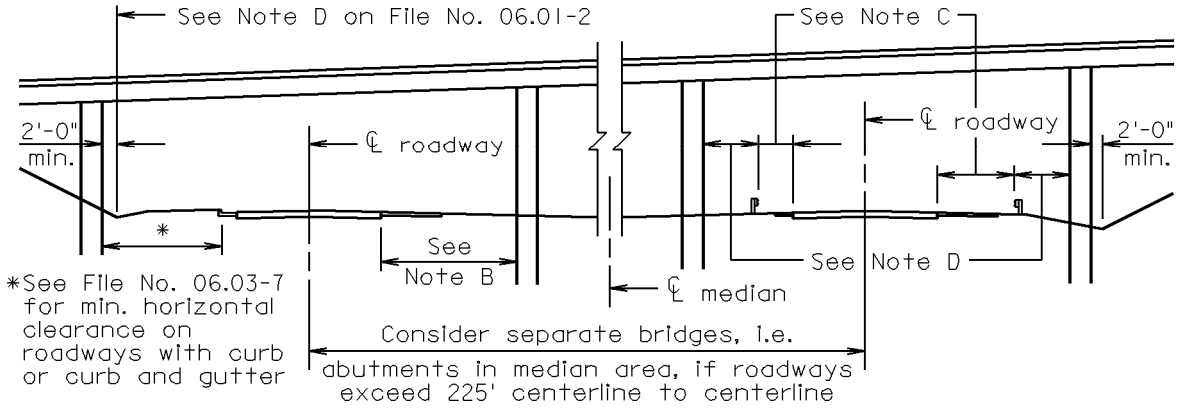

URBAN PRINCIPAL ARTERIAL SYSTEM

Notes:

A. The minimum vertical clearance shall be 16'-6". Vertical clearance less than 16'-6" requires a design exception.

B. The minimum horizontal clearance on roadways with shoulders shall equal or exceed the clear zone distances shown in Table 1 on File No. 06.03-4.

C. Guardrail or median barrier shall be used as shown when the required minimum horizontal clearance cannot be provided or such clearance cannot be economically justified. For guardrail offset, see Tables 1 and 2 on Standard GR-INS, sheet 6 of 8, of VDOT *Road and Bridge Standards*. Offset should be confirmed with the road designer.

D. When required, guardrail shall be located to provide the clearance shown on Standard GR-INS, sheet 3 of 8, of VDOT *Road and Bridge Standards* corresponding to the maximum dynamic deflection of the guardrail being used. The overall dimension shall account for the guardrail width and should be confirmed with the road designer.

E. Bridges on urban principal arterials with curb and gutter on approach roadway shall have a width equal to the full width of the approach roadway as detailed for the urban minor arterial system on File No. 06.02-7.

F. For additional requirements for curved bridges and tangent bridges with a horizontal curve located on the roadway at either end, see File No. 06.03-1.

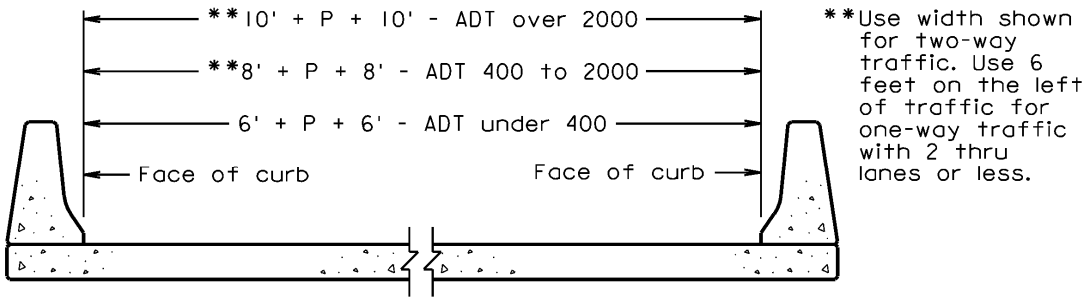

ROADWAY WITH SHOULDER

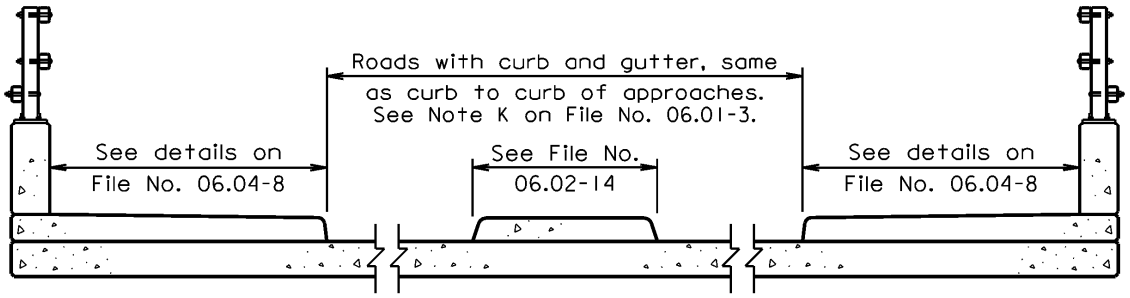

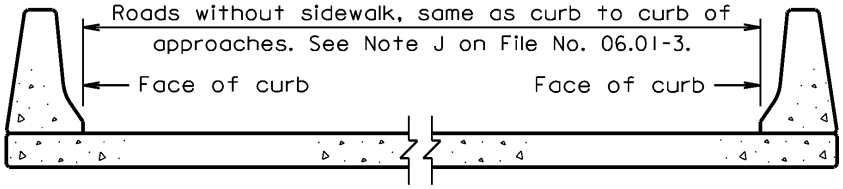

ROADWAY WITH CURB OR CURB AND GUTTER

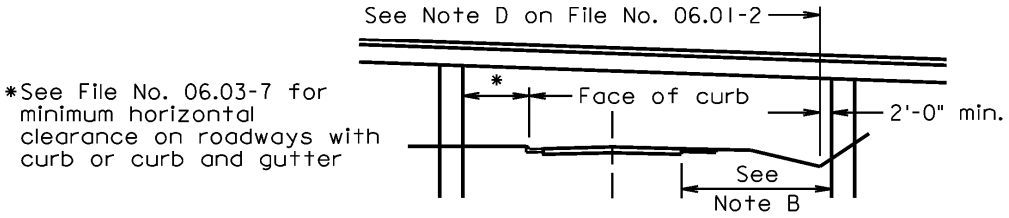

URBAN MINOR ARTERIAL SYSTEM

GEOMETRICS **ROAD CLASSIFICATIONS** **URBAN MINOR ARTERIAL SYSTEM**	VOL. V - PART 2 DATE: 09July2012 SHEET 7 of 16 FILE NO. 06.02-7

Notes:

A. The minimum vertical clearance shall be 14'-6" and the desirable 16'-6". Vertical clearance less than 16'-6" but greater than or equal to 14'-6" requires a design waiver. Vertical clearance less than 14'-6" requires a design exception.

B. The minimum horizontal clearance on roadways with shoulders shall equal or exceed the clear zone distances shown in Table 1 on File No. 06.03-4.

C. Guardrail or median barrier shall be used as shown for Rural Minor Arterials on File No. 06.02-3 when the required minimum horizontal clearance cannot be provided or such clearance cannot be economically justified. For guardrail offset, see Tables 1 and 2 on Standard GR-INS, sheet 6 of 8, of VDOT *Road and Bridge Standards*. Offset should be confirmed with the road designer.

D. When required, guardrail shall be located to provide the clearance shown on Standard GR-INS, sheet 3 of 8, of VDOT *Road and Bridge Standards* corresponding to the maximum dynamic deflection of the guardrail being used. The overall dimension shall account for the guardrail width and should be confirmed with the road designer.

E. For ADT, use design year traffic. See Note I on File No. 06.01-3.

F. For bridges carrying two-way traffic where an ultimate 4-lane divided is to be built, geometrics shall be approved by the State Structure and Bridge Engineer and coordinated with the roadway designer. 2-lane structures carrying two-way traffic have different shoulder width requirements than 2-lane structures carrying one-way traffic.

G. For additional requirements for curved bridges and tangent bridges with a horizontal curve located on the roadway at either end, see File No. 06.03-1.

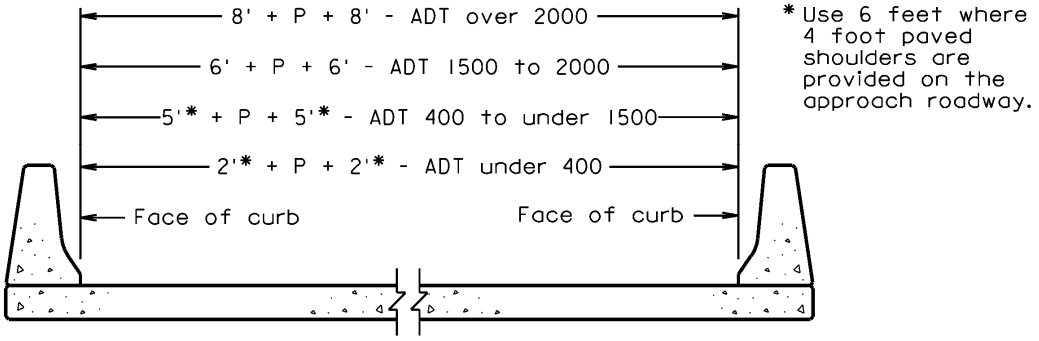

ROADWAY WITH SHOULDER

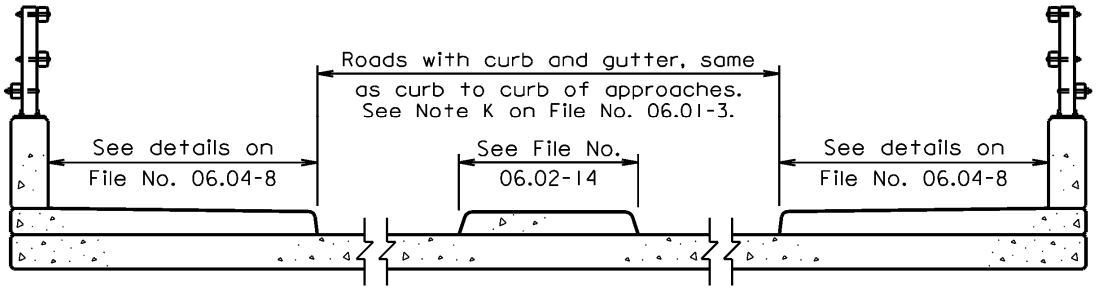

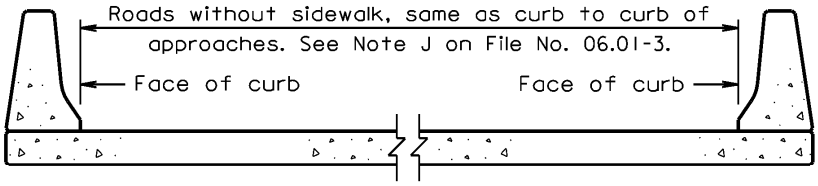

ROADWAY WITH CURB OR CURB AND GUTTER

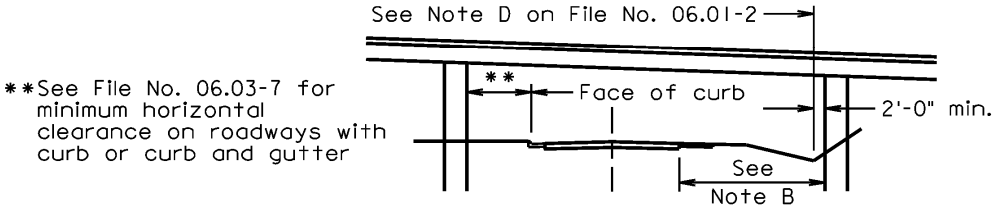

URBAN COLLECTOR STREET SYSTEM

GEOMETRICS **ROAD CLASSIFICATIONS** **URBAN COLLECTOR STREET SYSTEM**	VOL. V - PART 2 DATE: 09July2012 SHEET 9 of 16 FILE NO. 06.02-9

Notes:

A. The minimum vertical clearance shall be 14'-6" and the desirable 16'-6". Vertical clearance less than 16'-6" but greater than or equal to 14'-6" requires a design waiver. Vertical clearance less than 14'-6" requires a design exception.

B. The minimum horizontal clearance on roadways with shoulders shall equal or exceed the clear zone distances shown in Table 1 on File No. 06.03-4.

C. Guardrail or median barrier shall be used as shown for Rural Collector Roads on File No. 06.02-4 when the required minimum horizontal clearance cannot be provided or such clearance cannot be economically justified. For guardrail offset, see Tables 1 and 2 on Standard GR-INS, sheet 6 of 8, of VDOT *Road and Bridge Standards*. Offset should be confirmed with the road designer.

D. When required, guardrail shall be located to provide the clearance shown on Standard GR-INS, sheet 3 of 8, of VDOT *Road and Bridge Standards* corresponding to the maximum dynamic deflection of the guardrail being used. The overall dimension shall account for the guardrail width and should be confirmed with the road designer.

E. For ADT, use design year traffic. See Note I on File No. 06.01-3.

F. For additional requirements for curved bridges and tangent bridges with a horizontal curve located on the roadway at either end, see File No. 06.03-1.

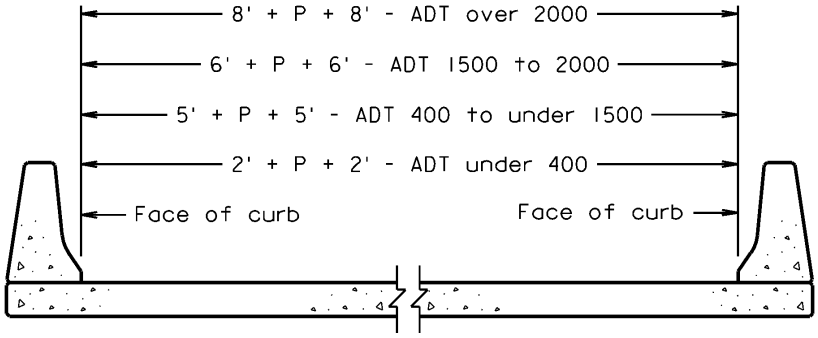

ROADWAY WITH SHOULDER

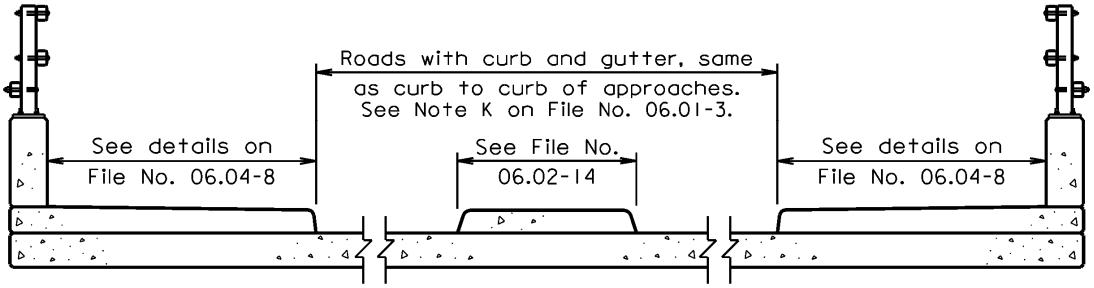

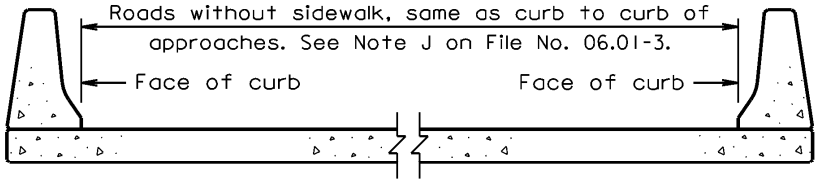

ROADWAY WITH CURB OR CURB AND GUTTER

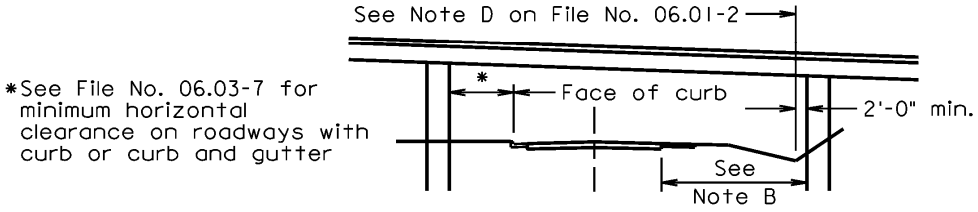

URBAN LOCAL STREET SYSTEM

GEOMETRICS **ROAD CLASSIFICATIONS** **URBAN LOCAL STREET SYSTEM**	VOL. V - PART 2 DATE: 09July2012 SHEET 11 of 16 FILE NO. 06.02-11

Notes:

A. The minimum vertical clearance shall be 14'-6" and the desirable 16'-6". Vertical clearance less than 16'-6" but greater than or equal to 14'-6" requires a design waiver. Vertical clearance less than 14'-6" requires a design exception.

B. The minimum horizontal clearance on roadways with shoulders shall equal or exceed the clear zone distances shown in Table 1 on File No. 06.03-4.

C. Guardrail or median barrier shall be used as shown for Rural Local Roads on File No. 06.02-5 when the required minimum horizontal clearance cannot be provided or such clearance cannot be economically justified. For guardrail offset, see Tables 1 and 2 on Standard GR-INS, sheet 6 of 8, of VDOT *Road and Bridge Standards*. Offset should be confirmed with the road designer.

D. When required, guardrail shall be located to provide the clearance shown on Standard GR-INS, sheet 3 of 8, of VDOT *Road and Bridge Standards* corresponding to the maximum dynamic deflection of the guardrail being used. The overall dimension shall account for the guardrail width and should be confirmed with the road designer.

E. For ADT, use design year traffic. See Note I on File No. 06.01-3.

F. For additional requirements for curved bridges and tangent bridges with a horizontal curve located on the roadway at either end, see File No. 06.03-1.

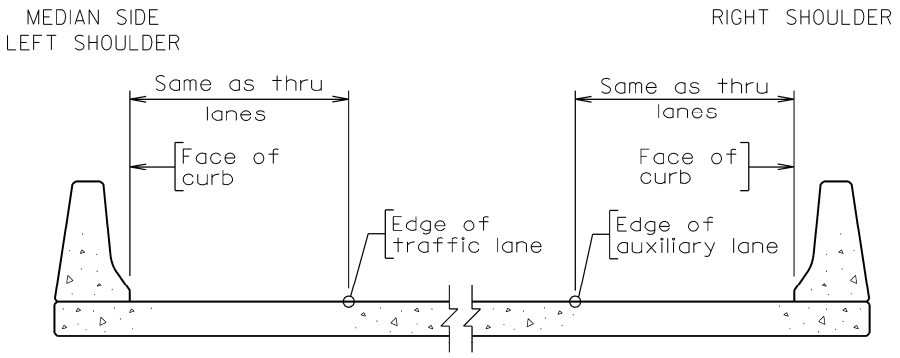

STRUCTURE WITH AUXILIARY LANE

For roadway with auxiliary lane beneath a structure,
see Note G on File No. 06.01-2.

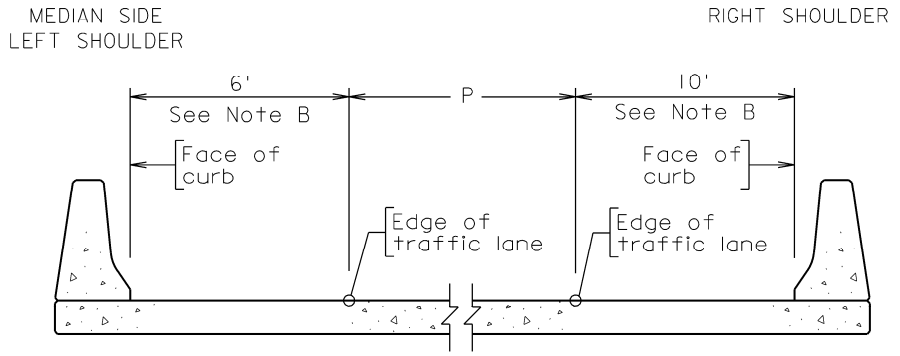

SINGLE LANE RAMP STRUCTURE

See Note C

Notes:

A. The minimum vertical clearance shall be 16'-6". Vertical clearance less than 16'-6" requires a design exception.

B. Shoulders on horizontally curved ramp structures or on tangents to horizontally curved approach roadways shall be of sufficient width to satisfy stopping sight distance criteria. Shoulder width on the inside of curves may be increased to provide sufficient sight distance, but shall not exceed 12 feet without a design waiver. Switching the relative position of the 6 and 10 foot shoulder widths to provide sufficient sight distance is an option on single lane ramp structures. Coordinate with the road designer. For additional information, see File No. 06.03-1.

C. For multiple lanes, use geometrics for classification of roadway mainline unless stopping sight distance criteria is not satisfied. See Note B.

D. For ramps under a structure, use geometrics for classification of roadway mainline to determine horizontal clearances required. Consult road designer for appropriate horizontal clearances where ramp connects roadways with different road classifications, design speeds, ADT, etc.

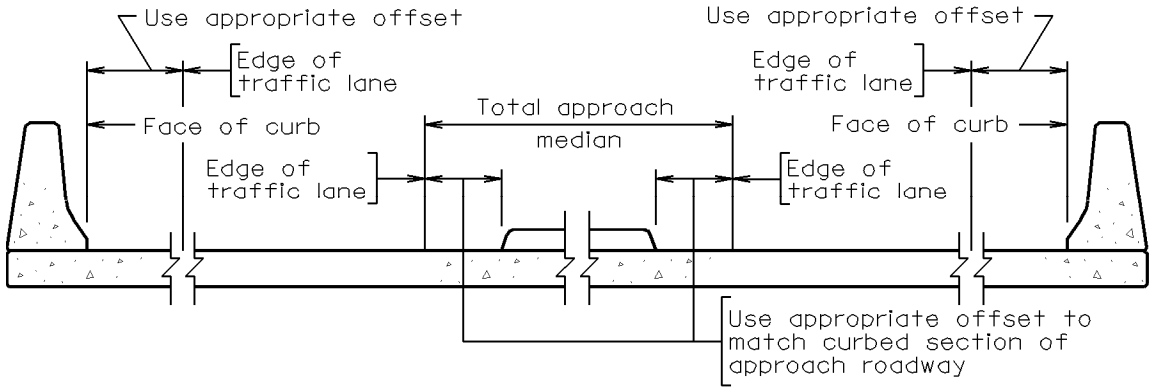

STRUCTURE WITH APPROACH RAISED MEDIAN

For 4 or more lanes

Notes:

A. Median height/shape to match approach.

B. For median details and requirements, see File No. 25.03-3.

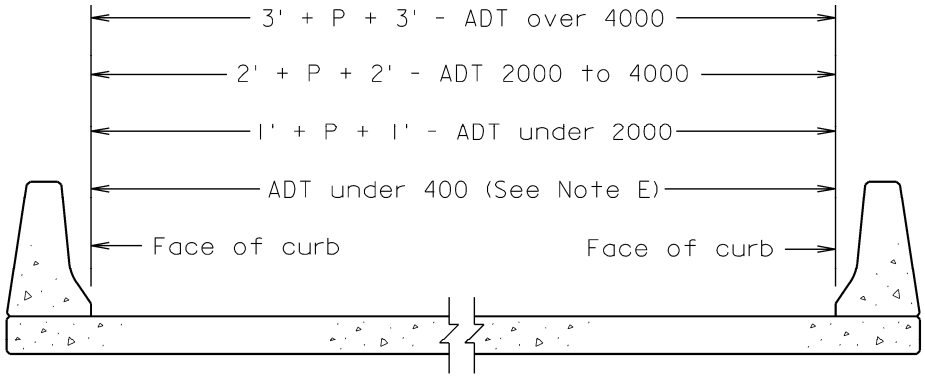

Notes:

A. Does not apply to NHS projects or freeway road classification. There is no road classification inferred in the above bridge widths.

B. Replacement width shall meet or exceed the existing bridge structure width.

C. The adequacy of the hydraulic opening must be determined and approved by the District Hydraulic Engineer.

D. There are no road improvements scheduled in the approved or in the proposed Six Year Improvement Plan.

E. For design year ADT under 400, matching the existing bridge width is acceptable provided the following items are documented in the project folder.

- No evidence of existing site specific safety problem related to the width of the existing bridge as per the AASHTO Guidelines for Geometric Design of very Low-Volume Local Roads.
- A statement from the Resident Administrator citing the concurrence of the locality on the Department's intent to replace the bridge superstructure with a structure width that provides less than the minimum widths in the AASHTO manual "A Policy on Geometric Design of Highways and Streets".
- Cost estimates of alternatives considered.

F. For other pertinent notes, refer to specific road classification in this chapter.

G. An existing one-lane bridge superstructure or deck can be replaced and remain a one-lane bridge when the design year ADT is less than 400 without requiring a design waiver by the State Structure and Bridge Engineer. When this criteria is not met, see File No. 06.01-5.

For continuation of notes, see next sheet.

Notes (continued):

H. For superstructure replacement projects, the minimum vertical clearance provided should adhere to that noted in this chapter.

When the minimum vertical clearance cannot be achieved, the designer shall submit a design exception/waiver to the State Structure and Bridge Engineer through the:

- District Bridge Engineer for district projects
- Asst. State Structure and Bridge Engineer for C.O. projects and Consultant projects

with, but not limited to, the following information at the preliminary stage (TS&L):

- Existing vertical clearance
- Maximum vertical clearance that can be provided
- Existing vertical clearance on adjacent bridges
- History of any accidents due to clearance issues at this location and adjacent bridge structures
- Documentation as to why the required minimum vertical clearance cannot be provided (cost, local conditions, etc.)

I. The FHWA has reviewed and approved the use of these geometrics and additional approval is not required for Federal Oversight projects.

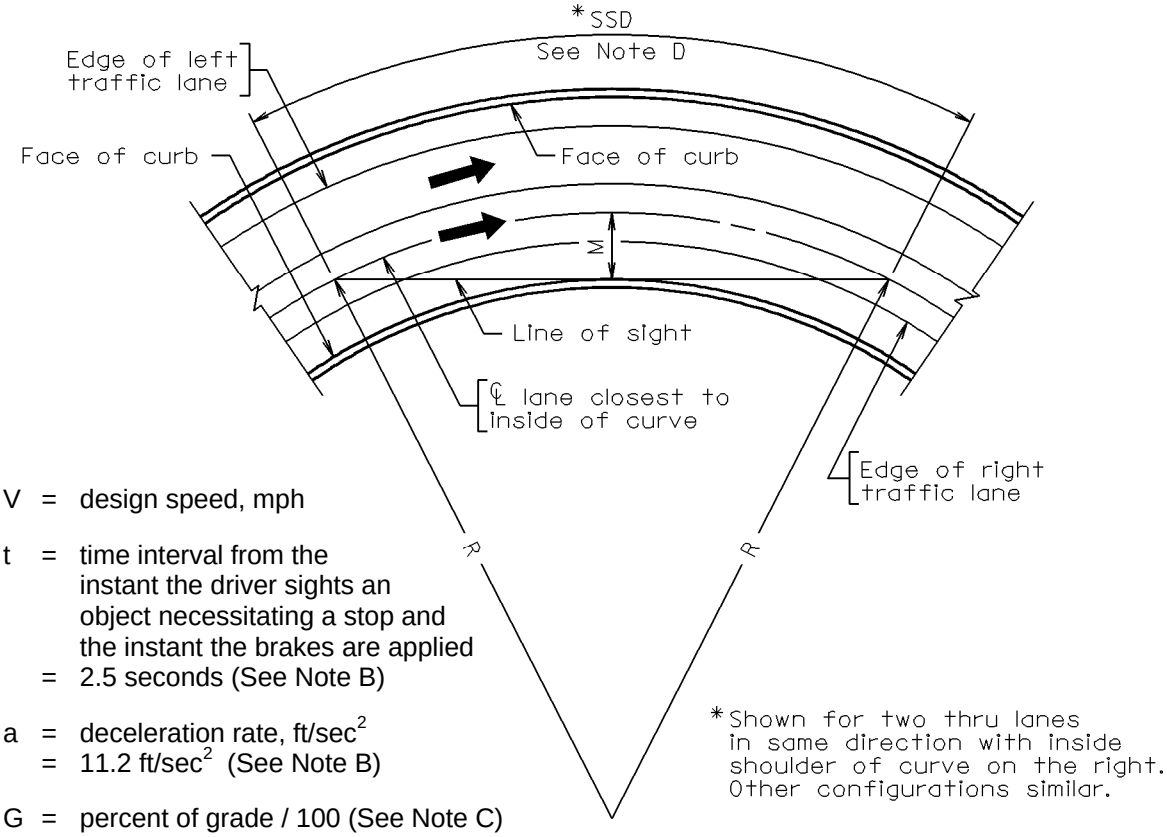

V = design speed, mph

t = time interval from the instant the driver sights an object necessitating a stop and the instant the brakes are applied
= 2.5 seconds (See Note B)

a = deceleration rate, ft/sec^2
= 11.2 ft/sec^2 (See Note B)

G = percent of grade / 100 (See Note C)

R = Radius of curve, ft

Brake reaction distance = distance needed to stop vehicle from the instant brake application begins, ft
= 1.47 x V x t

Braking distance = distance needed to stop the vehicle from the instant brake application begins, ft

$$= \frac{V^2}{30 \times \left[(a/32) + G\right]}$$ [See Note C for sign convention for G]

SSD = minimum required stopping sight distance, ft
= brake reaction distance + braking distance

$$= 1.47 \times V \times t + \frac{V^2}{30 \times \left[(a/32) + G\right]}$$ [See Note C for sign convention for G]

M = middle ordinate, ft
= distance between ℄ inside lane and toe of parapet (obstruction)

$$= R \times \left[1 - \cos\left(\frac{28.65 \times SSD}{R}\right)\right]$$

Minimum shoulder width = M – Lane width / 2

For notes, see next sheet.

Notes:

A. On curved bridges and tangent bridges with a horizontal curve located on the roadway approaches at either end, the bridge designer shall check Stopping Sight Distance (SSD) criteria to ensure adequate shoulder width is provided. This includes where parapet/rail extends off the bridge along the roadway shoulder as in the case of MSE walls.

   All types of parapet/rail are considered obstructions for horizontal sight distance. Looking ahead along a curving roadway, an object is no more visible between the posts of open parapets/rails than with F-shaped parapet.

   Where vertical geometry (e.g. superelevated structures near the bottom of sag vertical curves) provides a continuous clear line of sight over the top of parapet/rail to the object (i.e. at the required SSD and as the vehicle approaches the object), a parapet/rail is not considered a sight obstruction. Clear line of sight shall be verified on the structure and approaches to the structure based on the assumed heights of the driver's eye (3'-6') and the obstacle (2'-0") above the top of roadway (See Note B), the specific roadway geometry and the height of parapet/rail. See next sheet for sample diagrams illustrating the verification process.

B. The value shown is the recommended design criterion in Chapter 3 of AASHTO *A Policy on Geometric Design of Highways and Streets*, 2011.

C. In a vertical curve, use the minimum "tangent" grade on an upgrade and the maximum "tangent" grade on a downgrade. This should provide a conservative value. If a more exact computation is warranted, check the instantaneous grades. Sign convention for "G" is positive on an upgrade and negative on a downgrade. Thus, an upgrade will decrease and a downgrade will increase the stopping sight distance required.

D. SSD is measured along the centerline of the lane closest to the inside shoulder of the curve.

E. The recommended stopping sight distances are based on passenger car operation and do not explicitly design for truck operation. Although larger and heavier vehicles need longer stopping distances, the truck driver is able to see substantially farther beyond vertical sight obstructions. However, where horizontal sight restrictions occur on downgrades, particularly at the end of long downgrades, it may be desirable to provide stopping sight distances that exceed the "normal" values. Coordinate with the road designer.

F. Where sufficient stopping sight distance is not available, alternative designs should be considered for both safety and economic reasons. Consideration shall be given to increasing the shoulder width, increasing the radius, reducing the design speed and/or revising the roadway alignment using a compound curve. Coordinate with the road designer.

   For urban road classifications with curb or curb and gutter and no sidewalk, a "sidewalk" section aligned with the face of approach curb may be used of sufficient width to offset the barrier and meet stopping sight distance criteria. The "sidewalk" may be terminated when no longer required provided it is properly transitioned.

G. The equations shown apply only to circular curves longer than the sight distance for the pertinent design speed. They are only exact when the line of sight is located within the limits of the simple horizontal curve. When a portion of the line of sight falls within a spiral curve, compound curve or tangent, the stopping sight distance should be checked by either a graphical procedure or more exact computational method.

H. If the shoulder width is increased to accommodate stopping sight distance, round the computed value up to the nearest 6" increment.

For equations and diagram, see previous sheet.

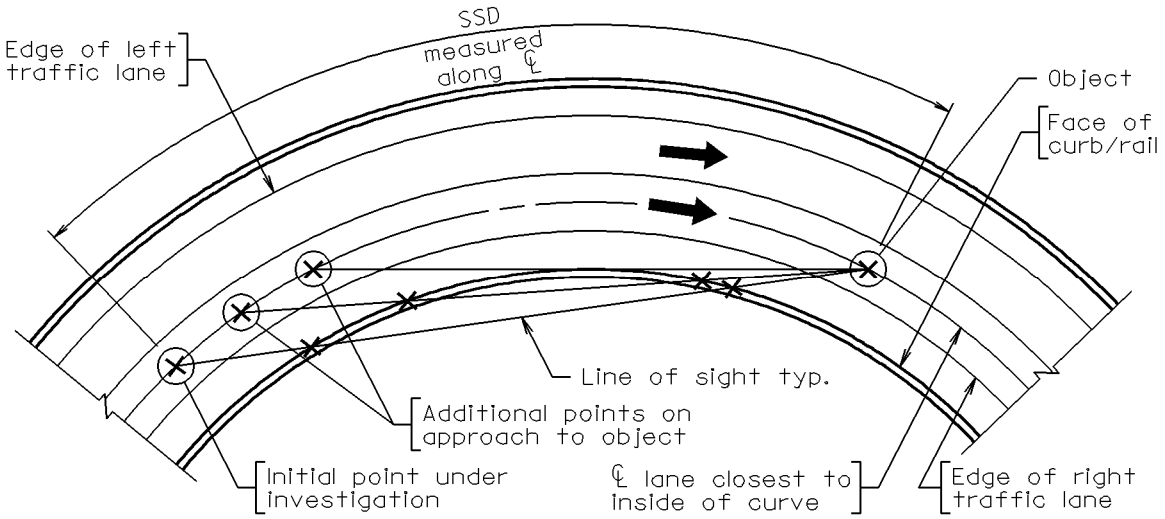

SAMPLE DIAGRAM AT SELECTED INTERVAL

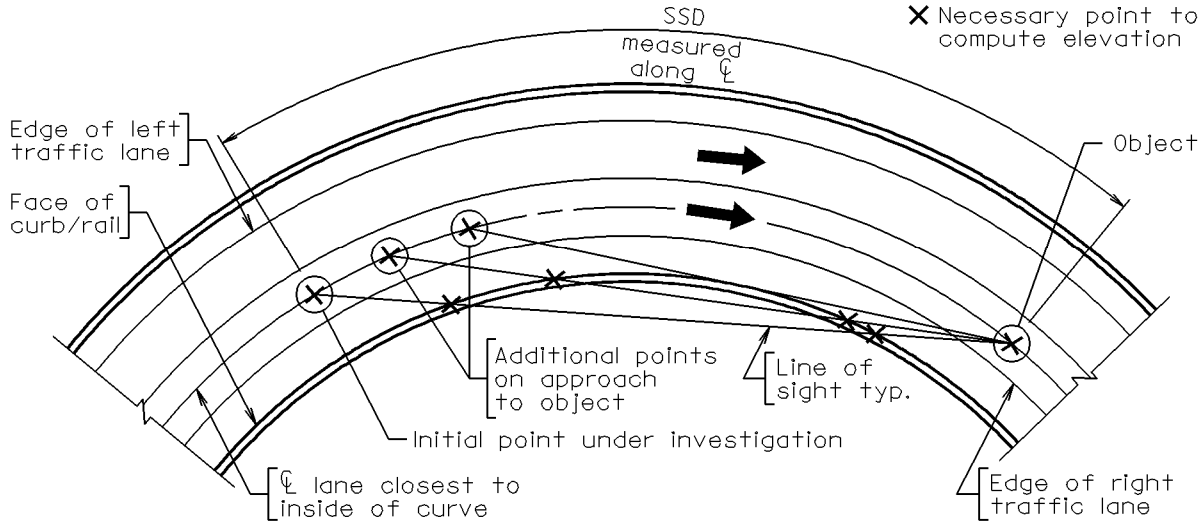

SAMPLE DIAGRAM AT NEXT SELECTED INTERVAL

Diagram Notes:

Clear line of sight over the top of parapet/rail shall be verified at appropriate intervals on the structure and approaches to the structure. The face of curb/rail intersection with line of sight should be used for computations. At each selected interval, compute SSD to obtain the location of the object using the grade that maximizes SSD along the computed length. Compute elevations at required points and adjust for height of eye, parapet/rail or object. Use a line diagram to ensure a clear line of sight is available above tops of parapet/rail. At each interval, check additional points on the approach to the object to ensure a clear line of sight is maintained.

Parapet/rail on substructure shall be included in the verification process where it is oriented parallel to the roadway.

SAMPLE DIAGRAMS TO CHECK SSD OVER PARAPET/RAIL

TABLE 1: CLEAR ZONE DISTANCES **

Design Speed	Design ADT	Clear Zone Distances In feet from edge of driving lane	
		⊙ Slope 1 : 6 or flatter	⊙ Slope 1 : 5 to 1 : 4
40 MPH or less	Under 750	7-10	7-10
	750-1500	10-12	12-14
	1500-6000	12-14	14-16
	Over 6000	14-16	16-18
45-50 MPH	Under 750	10-12	12-14
	750-1500	14-16	16-20
	1500-6000	16-18	20-26
	Over 6000	20-22	24-28
55 MPH	Under 750	12-14	14-18
	750-1500	16-18	20-24
	1500-6000	20-22	24-30
	Over 6000	22-24	26-32 *
60 MPH	Under 750	16-18	20-24
	750-1500	20-24	26-32 *
	1500-6000	26-30	32-40 *
	Over 6000	30-32 *	36-44 *
65-70 MPH	Under 750	18-20	20-26
	750-1500	24-26	28-36 *
	1500-6000	28-32 *	34-42 *
	Over 6000	30-34 *	38-46 *

Source: AASHTO *Roadside Design Guide*, 2011

** For rural and urban collectors with design speeds less than or equal to 45 mph, rural local roads and urban local streets, the minimum clear zone width is 10 feet. For curved roads, clear zone distances shall be adjusted as shown in Table 2 on File No. 06.03-5 when indicated by the road designer.

* Where a site specific investigation indicates a high probability of continuing crashes or such occurrences are indicated by crash history, the designer may provide clear zone distances greater than 30 feet as indicated.

⊙ Slope noted is the slope in the recovery area beyond the shoulder. For variable recoverable foreslopes, a simple or weighted average of the clear zone distances may be used. If one foreslope is significantly wider than the other, the clear zone may be based on that slope alone. See next sheet for Foreslope Depiction.

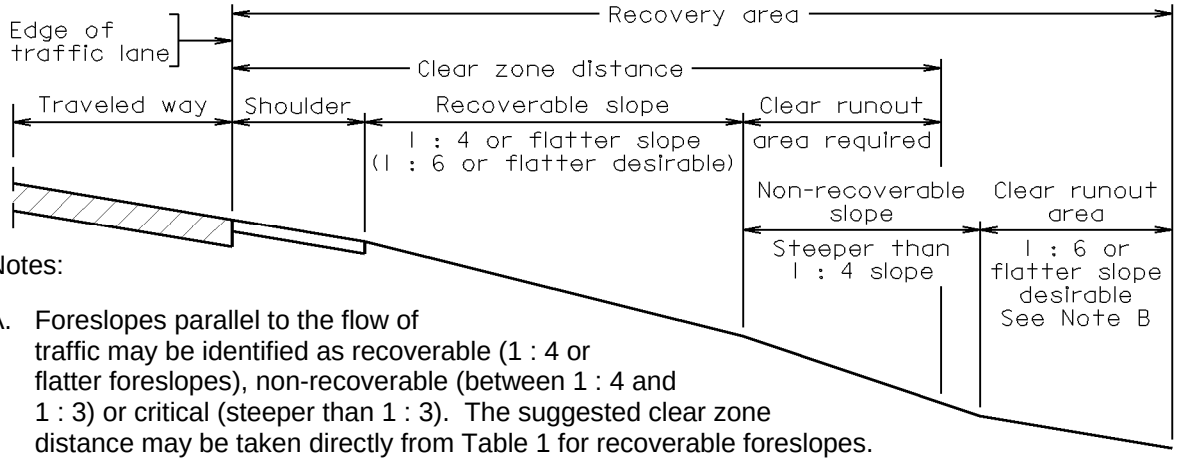

Notes:

A. Foreslopes parallel to the flow of traffic may be identified as recoverable (1 : 4 or flatter foreslopes), non-recoverable (between 1 : 4 and 1 : 3) or critical (steeper than 1 : 3). The suggested clear zone distance may be taken directly from Table 1 for recoverable foreslopes.

B. When the clear zone distance extends onto a non-recoverable slope, the portion of the clear zone distance on such a slope may be provided beyond the non-recoverable slope.

C. Critical foreslopes may require barrier protection.

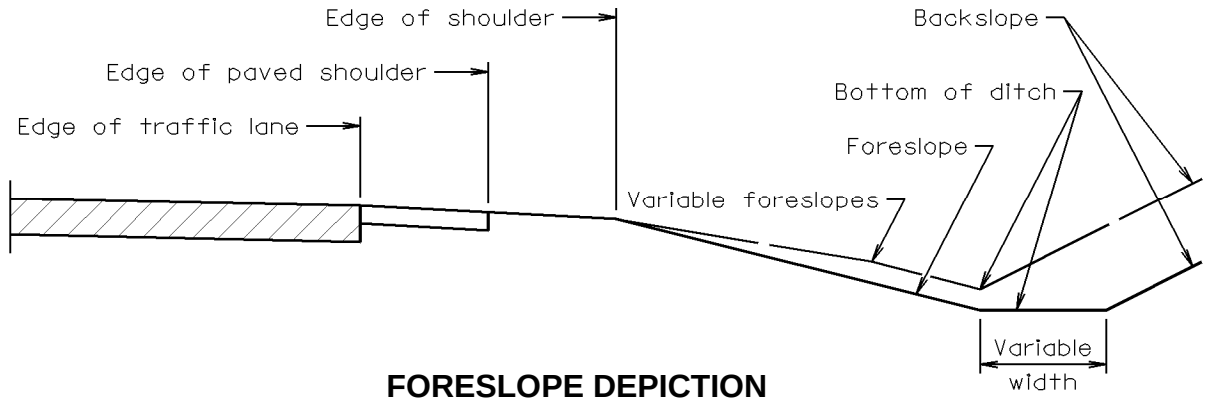

FORESLOPE DEPICTION

TABLE 2: HORIZONTAL CURVE ADJUSTMENTS

Radius feet	K_{CZ} Curve Correction Factors						
	Design Speed						
	40	45	50	55	60	65	70
2950	1.1	1.1	1.1	1.2	1.2	1.2	1.2
2300	1.1	1.1	1.2	1.2	1.2	1.2	1.3
1970	1.1	1.2	1.2	1.2	1.3	1.3	1.4
1640	1.1	1.2	1.2	1.3	1.3	1.3	1.4
1475	1.2	1.2	1.3	1.3	1.4	1.4	1.5
1315	1.2	1.2	1.3	1.3	1.4	1.4	
1150	1.2	1.2	1.3	1.4	1.5	1.5	
985	1.2	1.3	1.4	1.5	1.5	1.5	
820	1.3	1.3	1.4	1.5			
660	1.3	1.4	1.5				
495	1.4	1.5					
330	1.5						

Source: AASHTO *Roadside Design Guide*, 2011

$$CZ_C = L_C \times K_{CZ}$$

Where CZ_C = clear zone on outside of curvature, ft

L_C = clear zone distance, ft (See Table 1 on File No. 06.03-4)

K_{CZ} = curve correction factor

Notes:

These modifications are normally only considered where crash histories indicate a need, or a specific site investigation shows a definitive crash potential which could be significantly lessened by increasing the clear zone width and such increases are cost effective.

Clear zone correction factor is applied to outside of curves only. Curves with a radius greater than 2950 feet do not require an adjusted clear zone.

EXAMPLE CLEAR ZONE DISTANCE CHECK:

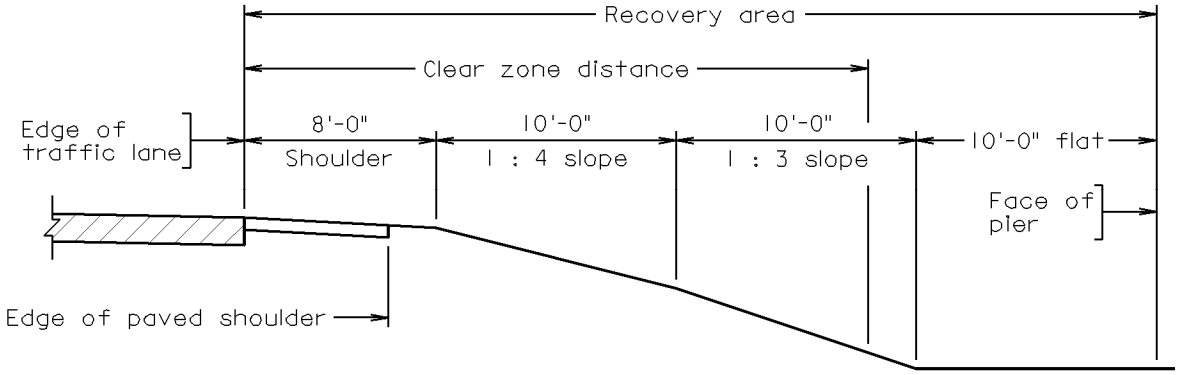

Design speed: 50 mph
Design year ADT: 1800 vehicles
Radius: 2400 feet
Horizontal clearance to face of pier = 38'-0"

From Table 1, File No. 06.03-4, with a design speed of 50 mph, a design year ADT of 1800 vehicles and a 1 : 4 slope beyond the shoulder

L_C = 20 to 26 feet

Crash history indicates a need to use horizontal curve adjustments.

From Table 2, File No. 06.03-5, with a design speed of 50 mph and radius of 2400 feet

K_{CZ} = 1.2

$CZ_C = L_C \times K_{CZ}$ = 24.0 to 31.2 feet

The 1 : 4 slope is a recoverable slope; the 1 : 3 slope is a non-recoverable slope. None of the slopes are critical (i.e. all shown are considered traversable). Since the clear zone distance extends onto a non-recoverable slope, the portion of the clear zone distance on such a slope can be provided beyond the non-recoverable slope.

Contributing clear zone distance on outside of curvature = 8' + 10' + 10' = 28'

28 feet falls within the calculated range and should be sufficient. No protection is required. Confirm with the road designer.

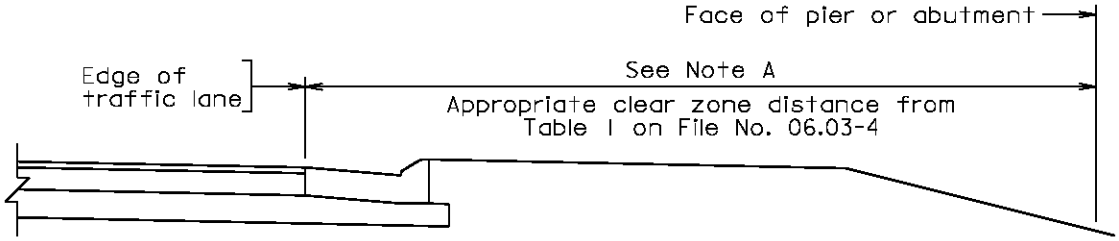

PROTECTION NOT REQUIRED

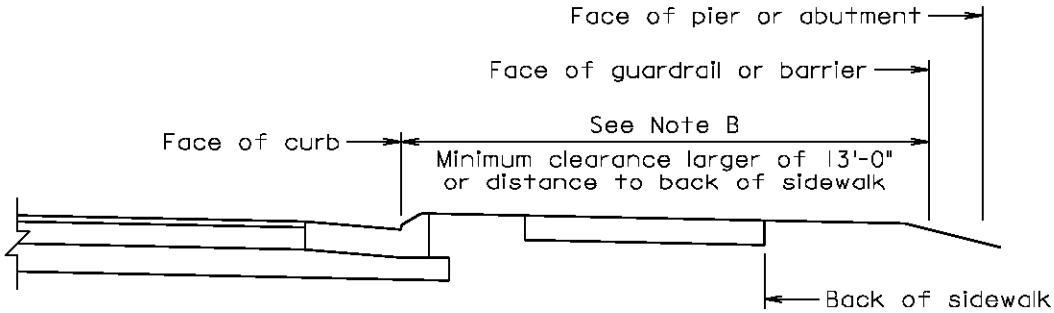

For roadways with design speed ≥ 45 mph and/or sidewalk/shared use path

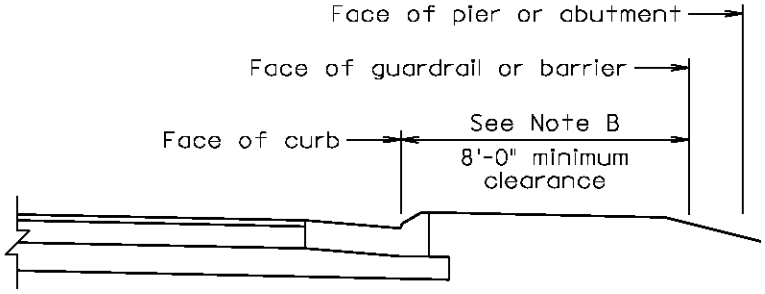

For roadways with design speed < 45 mph and without sidewalk/shared use path

PROTECTION REQUIRED

Notes:

A. Piers or abutments should be located outside of the clear zone distances shown in Table 1 of File No. 06.03-4. In urban situations where this is not practical, see Note B.

B. When curb is utilized on urban roadways and clear zone distances in Table 1 of File No. 06.03-4 are not practical, piers or abutments shall be protected by guardrail or barrier and located to provide the greatest practical clear zone distances, but no less than the minimum distances from the face of curb to the face of guardrail/barrier shown above.

C. See Note D on File 06.01-2 for toe of fill location for abutments.

D. Where lanes adjacent to a curb have a different design speed than thru lanes (e.g., lanes for ramps), check both the clear distance from the edge of thru lane at the corresponding design speed and from the edge of lane adjacent to the curb at the corresponding design speed.

E. Minimum lateral offsets shown in the VDOT *Road Design Manual* (RDM), Appendix A, Section A-2 for roadways with curbs are not intended for structures added to the roadway template. The minimum clearances shown above meet those shown in the RDM, Appendix A, Section A-3 for guardrail installation in urban settings. A design waiver/exception is required if they are not met.

PEDESTRIAN FACILITIES:

Sidewalk: The portion of a roadway between the curb lines or lateral lines of a highway and the adjacent property lines, intended for use by pedestrians. For geometric requirements, see File Nos. 06.04-8 thru -9.

Pedestrian bridge: A structure over a highway, railroad, or inaccessible area intended for exclusive use by pedestrians. For geometric requirements, see File No. 06.04-6.

BICYCLE FACILITIES:

Shared roadway: A roadway open to both bicycle and motor vehicle travel with no bikeway designation (i.e. un-signed). This may be a shared lane, street with wide outside lanes, or road with paved shoulders. Where the approach roadway has 4-foot or 5-foot paved shoulders, the bridge shoulder width shall not be less than 5 feet or 6 feet respectively. No other modifications to geometrics are required. See File Nos. 06.02-1 thru -14.

Signed shared roadway: A shared roadway designated by bike route signs. Signing a shared roadway indicates that these routes are suitable as shared routes, will be maintained in a manner consistent with the needs of bicyclists and alerts vehicle drivers that bicycles are present. The minimum railing height shall be 54". Where the approach roadway has 4-foot or 5-foot paved shoulders, the bridge shoulder width shall not be less than 5 feet or 6 feet respectively. No other modifications to geometrics are required. See File Nos. 06.02-1 thru -14.

Bicycle (bike) lane: A portion of roadway designated by striping, signing and pavement markings for the preferential use of bicyclists. For geometric requirements, see File Nos. 06.04-10 thru -11.

COMBINED PEDESTRIAN AND BICYCLE FACILITIES:

Shared use path: A bikeway physically separated from motorized vehicular traffic by an open space or barrier and either within the highway right-of-way or within an independent right-of-way intended for the use of bicycles, pedestrians, and other non-motorized users. For geometric requirements, see File Nos. 06.04-12 thru -18.

Shared use path bridge: A structure over a highway, railroad, or inaccessible area intended for exclusive use by pedestrians, bicyclists and other non-motorized users. For geometric requirements, see File No. 06.04-7.

Trail: A recreational or transportation path within a park, designated natural area or designated corridor primarily intended for the use of hikers, bicyclists and equestrians. For structures and their approaches when altering from the natural contours of the terrain, trails shall be considered a sub-set of shared use paths for bridge purposes. For geometric requirements, see the appropriate shared use path sheets.

DEFINITION OF TERMS:

Bridge approach: Portions of the pedestrian and/or bicycle facility leading up to the bridge on either side along the mainline direction of travel

Landing: A level resting area between two ramp runs. A 2% maximum slope on a landing is considered level when provided for drainage. Landings for switchbacks on ramps shall be flat (i.e. 0% slope).

Pedestrian ramp: A sloped transition between two elevation levels

Ramp: Pedestrian and/or bicycle facility with running slope steeper than 1 : 20

Running slope: Grade of pedestrian and/or bicycle facility

Turn-backs: 180 degree turn on ramp typically associated with connection from the bridge level to a street-passing-below level

Walking surface: Pedestrian and/or bicycle facility with running slope not steeper than 1 : 20

REFERENCES:

The content of File Nos. 06.04-1 thru -18 are based on:

- See VDOT L&D *Road Design Manual*, Appendix A, Section A-5.
- AASHTO *A Policy on Geometric Design of Highways and Streets*, 2011
- AASHTO *Guide for the Planning, Design, and Operation of Pedestrian Facilities*, 2004
- AASHTO *Guide for the Development of Bicycle Facilities*, 2012
- *Designing Sidewalks and Trails for Access, Part II of II: Best Practices Design Guide*, 2001
- *Americans with Disabilities Act Standards for Accessible Design*

ACCESSIBILITY REQUIREMENTS:

The Americans with Disabilities Act requires that all new construction be accessible. When the approach of a bridge alters the natural contours of the terrain, it is considered an extension of the structure and must meet accessibility requirements unless there is a signed accessible route equivalent.

Grade:

The maximum running slope of an accessible route used on VDOT projects is 8.33 percent (1 : 12), but grades exceeding 5 percent (1 : 20) are undesirable.

Where pedestrian access routes are contained within a street or highway right-of-way, the grade of pedestrian access routes shall not exceed the general grade established for the adjacent street or highway. Where pedestrian access routes are not contained within a street or highway right-of-way, the grade of pedestrian access routes shall be 5 percent maximum.

Pedestrian ramps:

Continuity of grade is desired between the approaches and the structure. Where this is not feasible, pedestrian ramps shall be provided. Where ramps are not feasible, elevators shall be required and shall be approved by the State Structure and Bridge Engineer. Stairs cannot be the only means to access and overpass. The following requirements shall apply to pedestrian ramps:

- The maximum running slope of the ramp shall be 8.33 percent (1 : 12). Grades exceeding 5 percent are undesirable and will require landings. The maximum cross slope shall be 2.08 percent (1 : 48).
- The maximum rise between any two consecutive landings of a ramp shall be 2’-6”.
- The minimum landing length shall be 5 feet.
- Handrails shall be on both side of the ramp and their terminal ends shall be returned to a wall, guard or the landing surface.
- Circular ramps will not be permitted.

Channelizing devices, e.g., barriers, may be recommended to encourage use of ramps/elevators and/or stairs.

Construction tolerances:

Construction tolerances for accessibility requirements (e.g. grade, cross slope, etc.) are identical to those for vehicular bridges. Maximums/minimums specified in this section do not require adjustments to account for construction tolerances.

ACCESSIBILITY REQUIREMENTS (Continued):

Drainage assemblies and downspouts:

Grates for drainage assemblies or openings for downspouts shall be pedestrian and/or bicycle friendly. Slots shall be perpendicular to the face of curb and slot width shall be limited to ½" for pedestrian and/or combined facilities and shall be limited to 1 ½" for bicycle only lanes. Drain assemblies and downspouts, including sloped areas in the deck, shall not extend more than 2 feet into a bicycle lane and shall be located outside of the approach paved width for shared use paths.

Joints:

Pedestrian and/or bicycle friendly details such as sliding plates may be warranted at joint locations across the width of the pedestrian and/or bicycle facility. When sliding plates are used, thicknesses greater than ¼" require beveled edges perpendicular to traffic. Maximum plate thickness is ½".

Handrails:

Handrails shall be provided on pedestrian bridges and shared use path bridges. Handrails are preferred where grades exceed 5% on barrier separated sidewalks and shared use paths. Handrails shall not be placed on barrier faces accessible to vehicular traffic due to crash test requirements.

The top gripping surface of handrails shall be at a consistent height between 34" and 38" above walking surfaces, stair nosings and ramp surfaces. Aligning handrails with the face of curb is preferred. Handrails shall not be obstructed along their tops or sides and shall conform to the minimum clearances shown below. Post spacing for handrail attachment shall not exceed 8'-0".

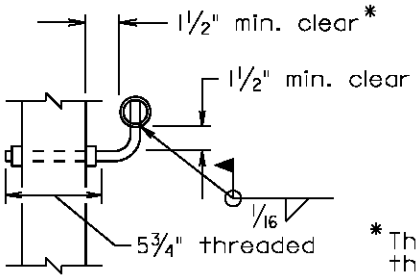

HANDRAIL DETAIL

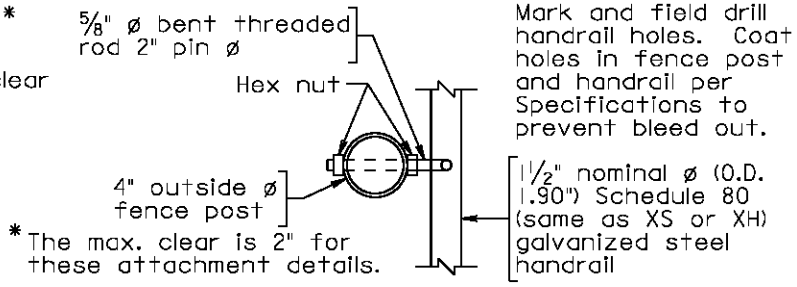

SECTION THRU POST

On pedestrian ramps, handrails shall be provided on both sides and shall be continuous the full length of walkway, each stair flight and ramp run. Inside handrails on stairs or ramps shall be continuous between flights or runs.

A cell containing the attachment details shown above named HRA1 can be found in the *bdetails1.cel* cell library and may be used on projects. These details are valid for a 12" wide curb with the fence post centered.

ACCESSIBILITY REQUIREMENTS (Continued):

Handrails (continued):

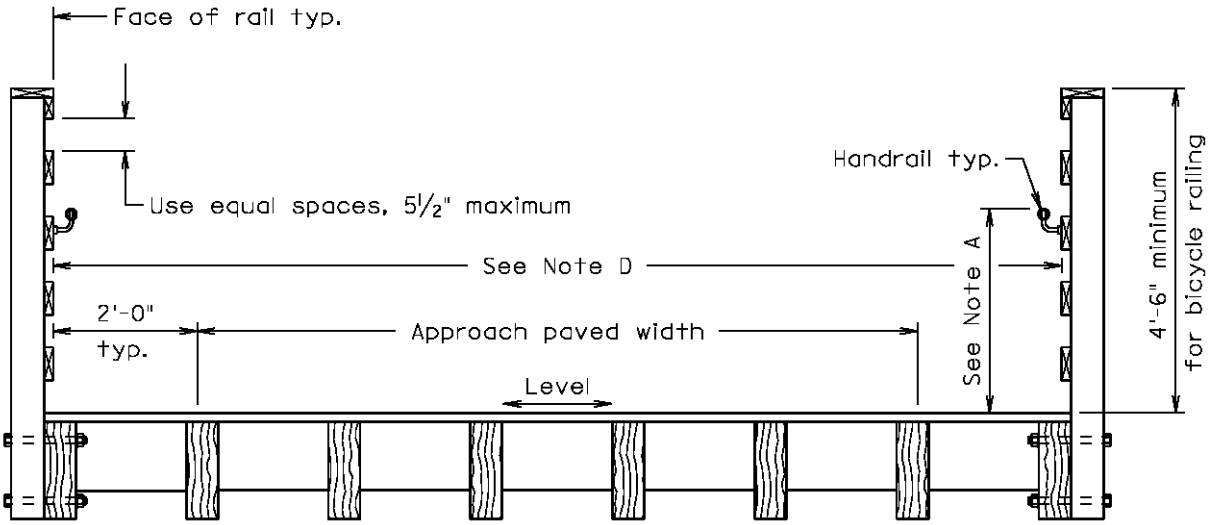

For notes, see File Nos. 06.04-6.

On pedestrian bridges or shared use path bridges with vertical timber posts, handrails shall be attached at post locations through both the rail and post. No modification to the minimum clear widths designated on File Nos. 06.04-6 and -7 for the handrails are required as shown for the shared use path bridge above. Rails should be spaced evenly for aesthetic purposes.

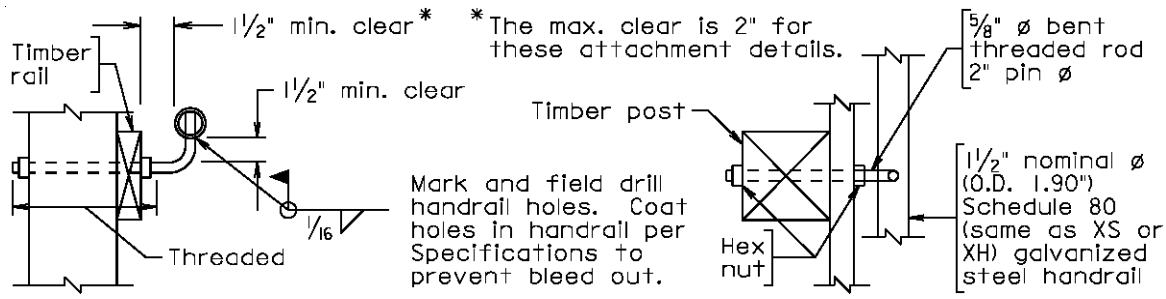

HANDRAIL DETAIL **SECTION THRU POST**

A cell containing the attachment details shown above named HRA2 can be found in the *bdetails1.cel* cell library and may be used on projects.

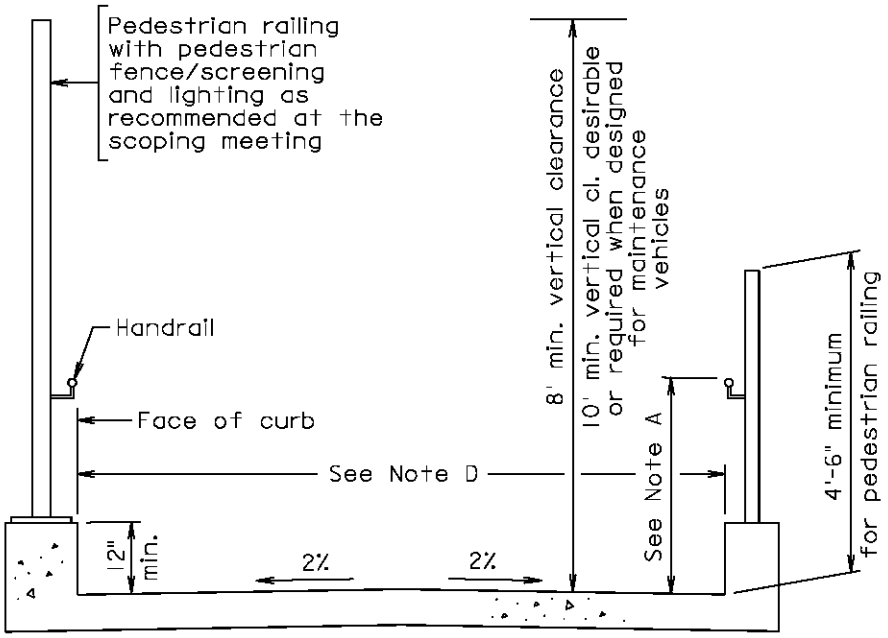

PEDESTRIAN BRIDGE

Notes:

A. For accessibility requirements, see File Nos. 06.04-3 thru -5.

B. Pedestrian railing shall be designed in accordance with AASHTO LRFD Bridge Design Specifications. The minimum railing height shall be 54" on structures. Pedestrian fence/ screening shall be used in accordance with and meet the minimum opening requirements of Part 2 Chapter 30 of this manual. Where protective screening is required/desired, fencing may be placed behind the railing or incorporated into the railing design. Where a concrete deck is utilized, the minimum concrete extension shall be 12" as shown above.

C. The minimum vertical clearance over a roadway for pedestrian bridges shall be 17'-6". Vertical clearance less than 17'-6" requires a design exception.

D. The minimum clear width is 8 feet. Matching the clear width of the approach sidewalk is preferred where wider than 8 feet. Normally, a recommendation is made at the scoping meeting.

E. Drainage accommodations shall be made as required by calculations.

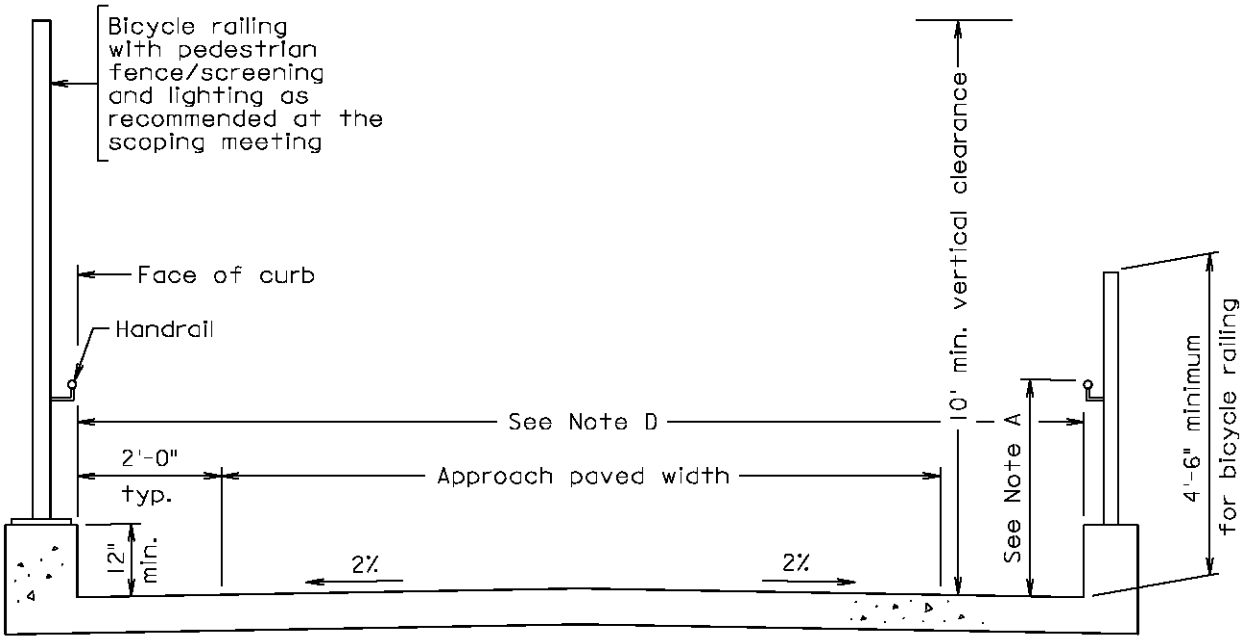

SHARED USE PATH BRIDGE

Notes:

A. For accessibility requirements, see File Nos. 06.04-3 thru -5.

B. Bicycle railing shall be designed in accordance with AASHTO LRFD Bridge Design Specifications. The minimum railing height shall be 54" on structures. Pedestrian fence/ screening shall be used in accordance with and meet the minimum opening requirements of Part 2 Chapter 30 of this manual. Where protective screening is required/desired, fencing may be placed behind the railing or incorporated into the railing design. Where a concrete deck is utilized, the minimum concrete extension shall be 12" as shown above.

C. The minimum vertical clearance over a roadway for shared use path bridges shall be 17'-6". Vertical clearance less than 17'-6" requires a design exception.

D. The minimum clear width shall be the width of the approach paved shared use path plus the minimum 2 foot wide graded area on both sides of the path. The recommended paved width for a two-directional shared use path is 10 feet. A reduced paved width of 8 feet can be adequate when all conditions in the VDOT L&D *Road Design Manual*, Appendix A, Section A-5, are met. A reduced width shall only be used when found adequate for and shown on the Road Typical Section(s) adjacent to the bridge.

E. Drainage accommodations shall be made as required by calculations.

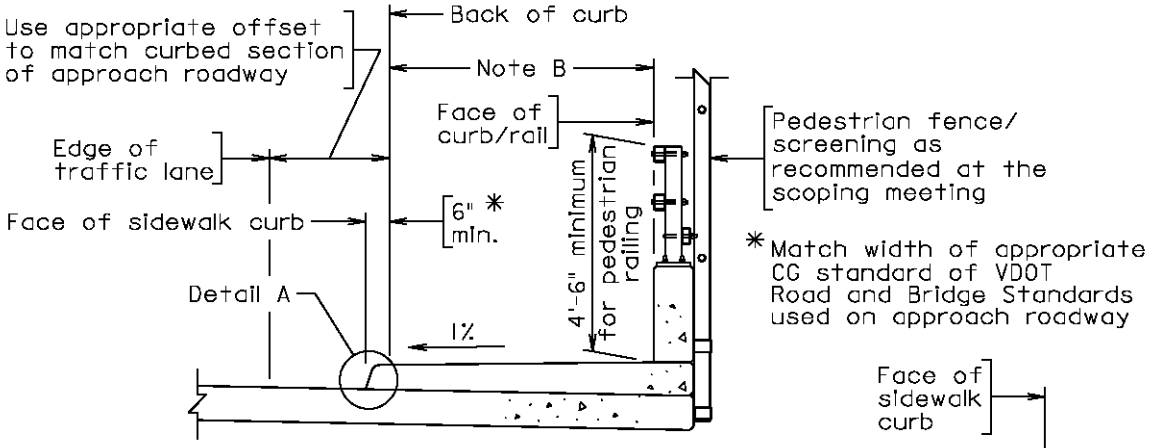

DESIGN SPEED ≤ 45 MPH

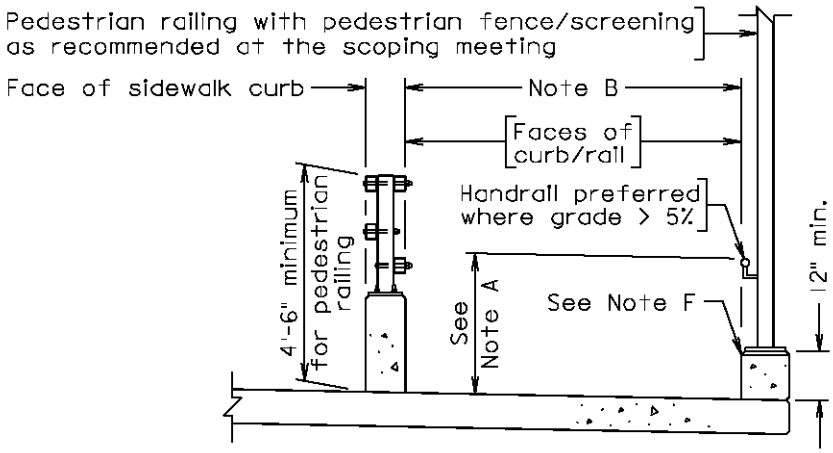

DESIGN SPEED > 45 MPH

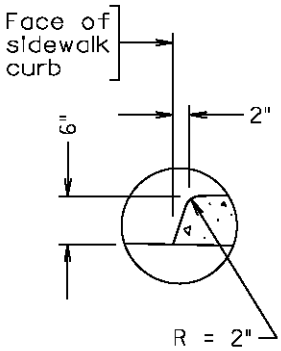

DETAIL A

APPROACH ROADWAY WITH SIDEWALK

Notes:

A. For accessibility requirements, see File Nos. 06.04-3 thru -5.

B. The sidewalk width shall be 6'-0" from the back of curb to the face of curb/rail (7 feet between faces of curb/rail for barrier separated sidewalk). The width of unpaved utility strips shall not be carried across the bridge. See L&D IIM-LD-55. Normally, a recommendation is made at the scoping meeting.

C. Where a physical barrier is required, the barrier height shall be a minimum of 54" on structures and crash tested. The appropriate VDOT standard BR27C or BR27D series rail may be used. For barrier separated sidewalk, see VDOT *Road Design Manual*, Appendix A, Section A-5 for barrier termination details and File Nos. 06.07-2 thru -3 for additional information when used in conjunction with approach slabs.

When the sidewalk on the approaches of a bridge is not needed in the bridge area, the bridge designer shall consult the road designer on the method of transition from the road typical section to the bridge typical section. On curved bridges with tight radii, the stopping sight distance to the barrier shall be investigated with the road designer.

For continuation of notes, see next sheet.

Notes (continued):

D. Use 6” sidewalk height with shape as shown.

E. Where the roadway is superelevated at a rate greater than 2 percent, increase the sidewalk cross slope on the high side to a maximum of 2 percent. The sidewalk is not to be less than 3 $^1/_2$” at the outside edge. See below for sidewalk superelevation details. When sidewalk would be less than 3 $^1/_2$” thick at the outside edge or a barrier is required due to design speed, use a slope break instead, similar to those shown on File No. 06.04-17 for shared use paths.

F. Pedestrian railing shall be designed in accordance with AASHTO LRFD Bridge Design Specifications. The minimum railing height shall be 54” on structures. The appropriate VDOT standard BR27C or BR27D series rail may be used for non-vehicular traffic. Pedestrian fence/ screening shall be used in accordance with and meet the minimum opening requirements of Part 2 Chapter 30 of this manual. Where protective screening is required/desired, fencing may be placed behind the railing or incorporated into the railing design.

G. Drainage accommodations shall be made as required by calculations.

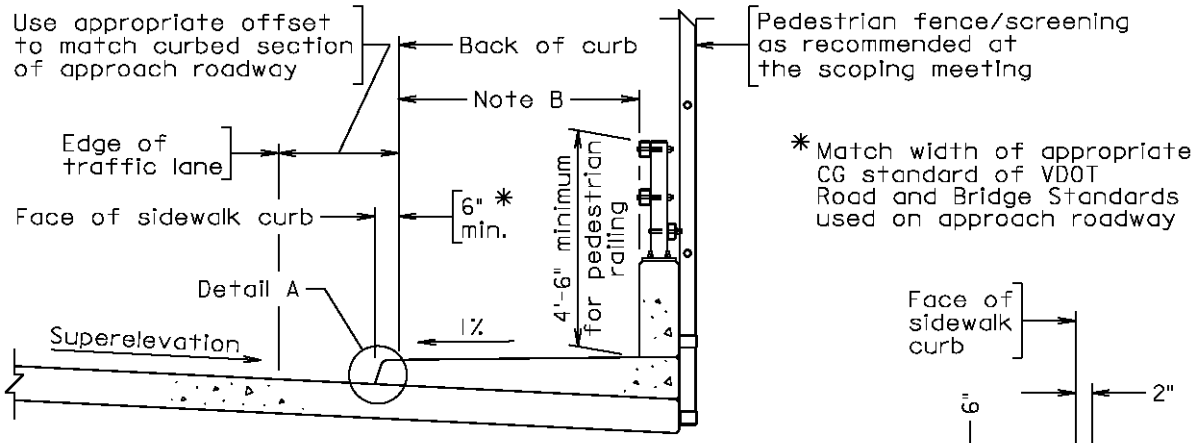

LOW SIDE - DESIGN SPEED ≤ 45 MPH

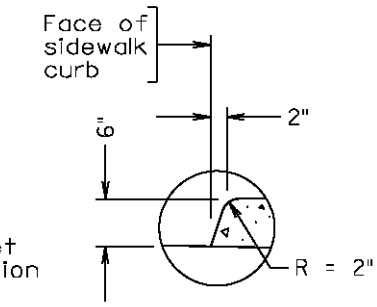

DETAIL A

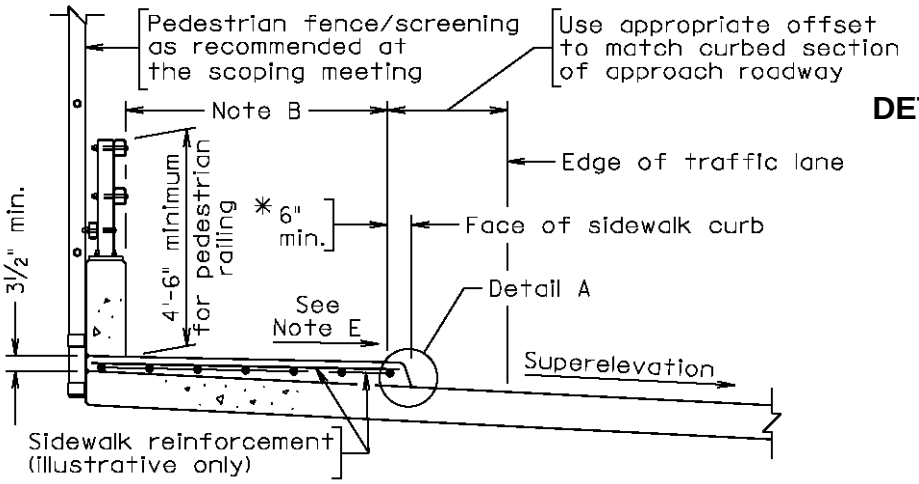

HIGH SIDE - DESIGN SPEED ≤ 45 MPH

SUPERELEVATED STRUCTURE WITH SIDEWALK

GEOMETRICS **PEDESTRIAN AND / OR BICYCLE FACILITIES** **STRUCTURE WITH SIDEWALK**	PART 2 DATE: 18May2016 SHEET 9 of 18 FILE NO. 06.04-9

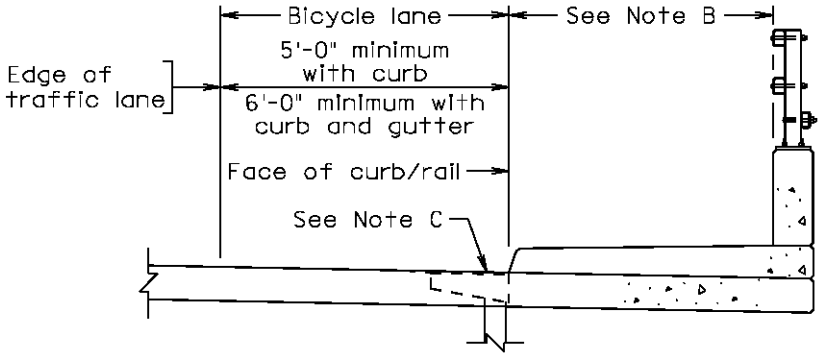

ADJACENT TO SIDEWALK / SHARED USE PATH

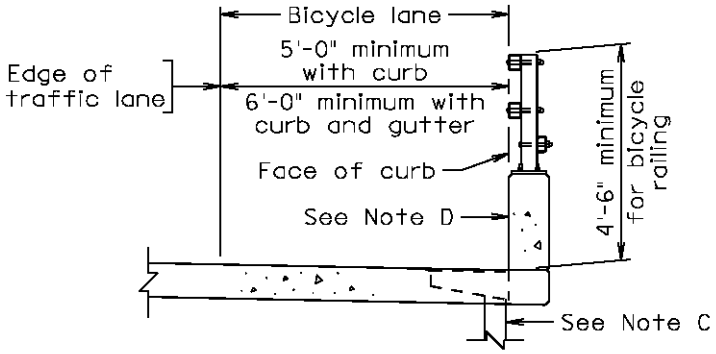

WITHOUT SIDEWALK / SHARED USE PATH

BICYCLE LANE - ROADWAY WITH CURB OR CURB AND GUTTER

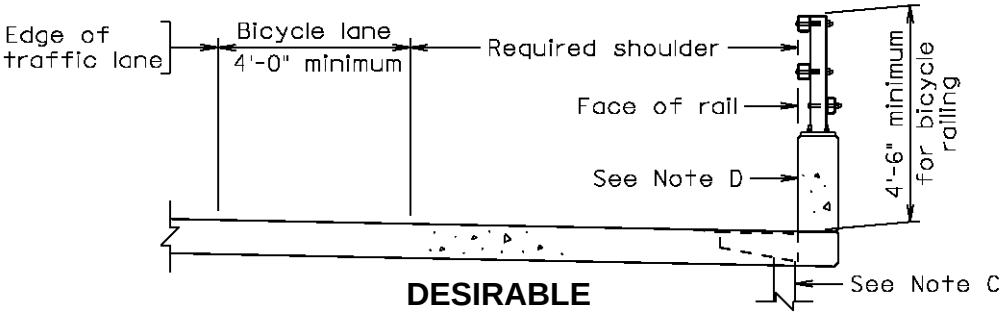

DESIRABLE

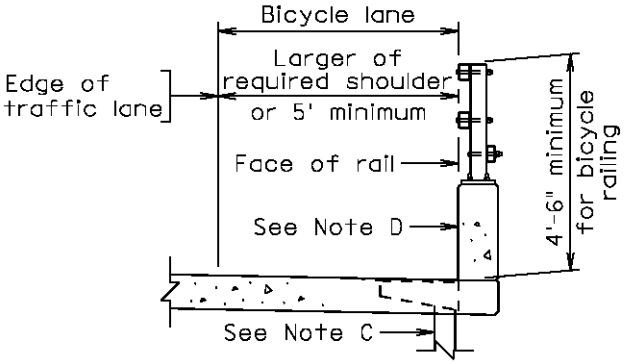

MINIMUM

BICYCLE LANE - ROADWAY WITH SHOULDERS (See Note E)

For notes, see next sheet.

GEOMETRICS **PEDESTRIAN AND / OR BICYCLE FACILITIES** **STRUCTURE WITH BICYCLE LANE**	PART 2 DATE: 18May2016 SHEET 10 of 18 FILE NO. 06.04-10

Notes:

A. For accessibility requirements, see File Nos. 06.04-3 thru -5.

B. Section shown with raised sidewalk. For sidewalk and shared use path requirements including barrier separation, see File Nos. 06.04-8 thru -9 and 06.04-12 thru -18 respectively.

C. Drainage accommodations shall be made as required by calculations.

D. Combination traffic and bicycle railing shall be crash tested. The minimum railing height shall be 54" on structures. The appropriate VDOT standard BR27C or BR27D series rail may be used adjacent to vehicular traffic.

E. On roadways with shoulders, the minimum typical section shall only be used when project constraints are such that the bicycle lane cannot be carried across the bridge otherwise and the Transportation and Mobility Planning Division has reviewed the plans and found the width acceptable.

F. Where abutment fill slopes of 1 : 2 or greater exist and fill height is greater than 10 feet, abutments and fills shall be detailed to provide a minimum of 5 feet between the edge of bicycle lane and the slope breakpoint.

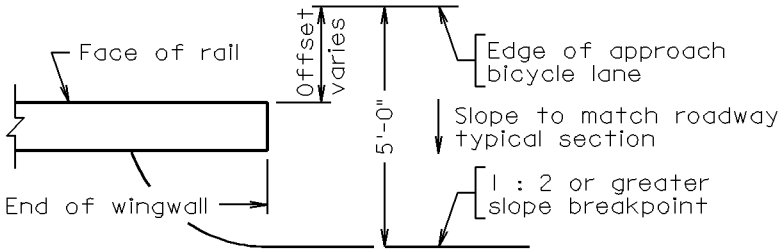

GEOMETRICS **PEDESTRIAN AND / OR BICYCLE FACILITIES** **STRUCTURE WITH BICYCLE LANE**	PART 2 DATE: 09July2012 SHEET 11 of 18 FILE NO. 06.04-11

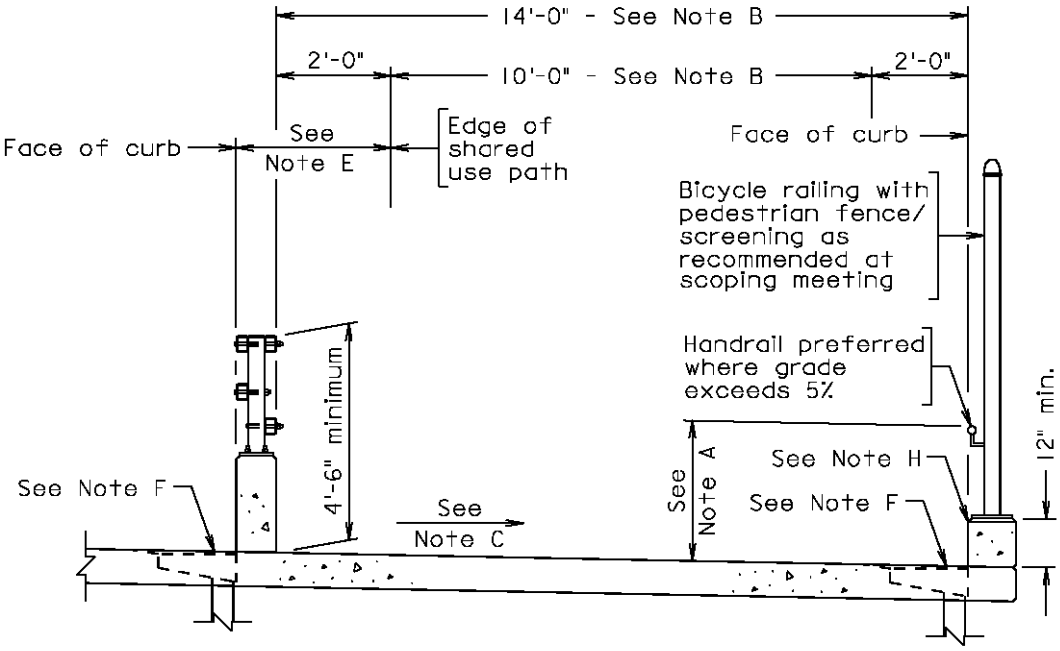

TYPICAL SECTION OF SHARED USE PATH (SUP)

Required when design speed > 45 mph. Recommended when design speed ≤ 45 mph for bridge lengths > 200 feet where costs associated with providing and terminating the barrier and transitioning the typical section can be offset by the reduced bridge width.

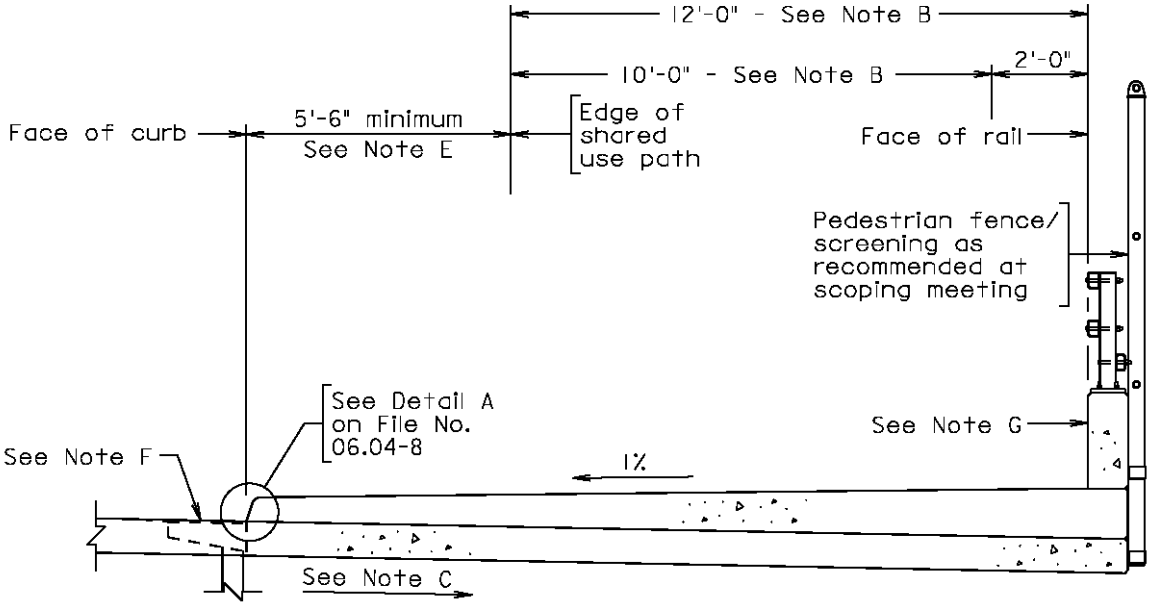

TYPICAL SECTION OF SHARED USE PATH (SUP)

Design speed ≤ 45 mph

For notes, see File Nos. 06.04-14 and -15.

GEOMETRICS **PEDESTRIAN AND / OR BICYCLE FACILITIES** **STRUCTURE WITH SUP – ROADWAY WITH CURB**	PART 2 DATE: 18May2016 SHEET 12 of 18 FILE NO. 06.04-12

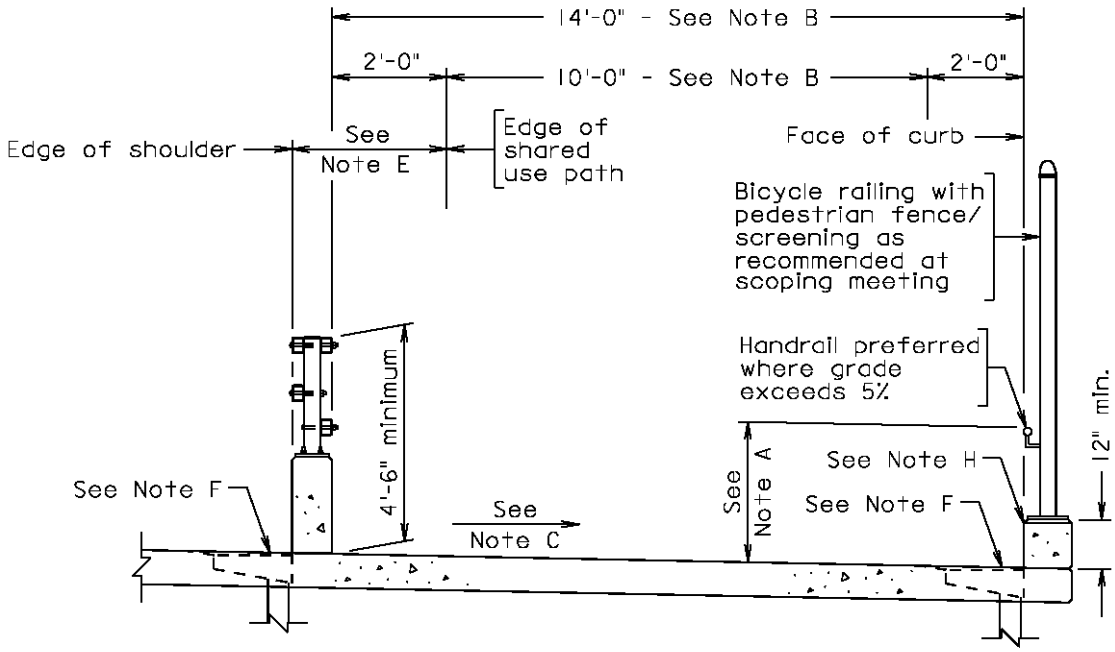

TYPICAL SECTION OF SHARED USE PATH (SUP)

Required when design speed > 45 mph. Recommended when design speed ≤ 45 mph for bridge lengths > 200 feet where costs associated with providing and terminating the barrier and transitioning the typical section can be offset by the reduced bridge width.

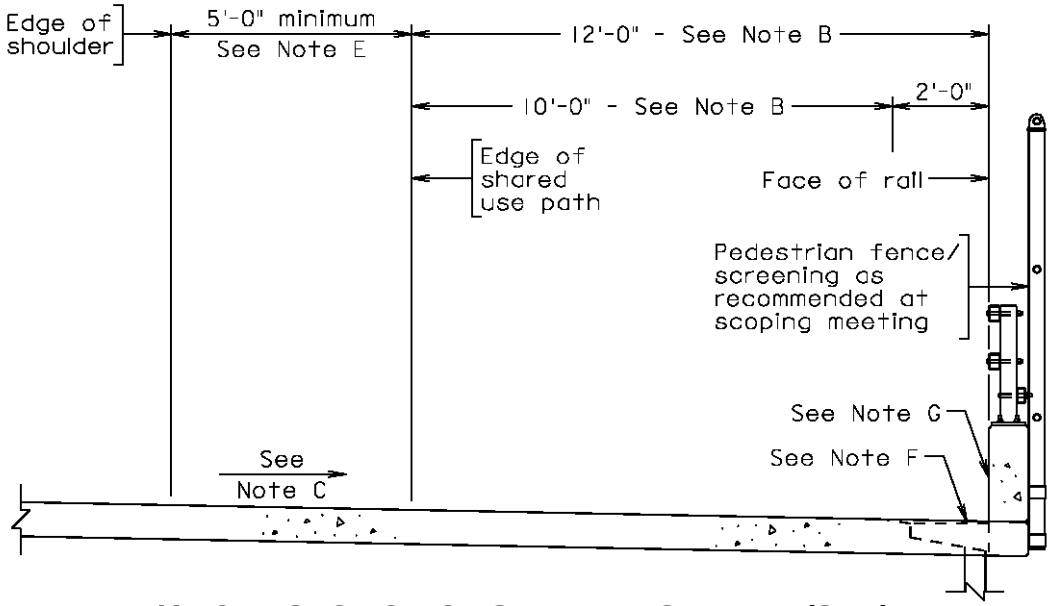

TYPICAL SECTION OF SHARED USE PATH (SUP)

Design speed ≤ 45 mph

For notes, see File Nos. 06.04-14 and -15.

GEOMETRICS **PEDESTRIAN AND / OR BICYCLE FACILITIES** **STRUCTURE WITH SUP – ROADWAY WITH SHOULDER**	PART 2 DATE: 18May2016 SHEET 13 of 18 FILE NO. 06.04-13

Notes:

A. For accessibility requirements, see File Nos. 06.04-3 thru -5.

B. The minimum clear width shall be the width of the approach paved shared use path plus the minimum 2 foot wide graded area on both sides of the path. The recommended paved width for a two-directional shared use path is 10 feet. A reduced paved width of 8 feet can be adequate when all conditions in the VDOT L&D *Road Design Manual*, Appendix A, Section A-5, are met. A reduced width shall only be used when found adequate for and shown on the Road Typical Section(s) adjacent to the bridge.

C. The cross slope of the vehicular traffic lanes shall be extended across the shared use path whenever possible. Transition to the bridge typical section shall occur prior to the bridge and coordinated with the road designer. Cross slope shall not exceed 2 percent for shared use paths adjacent to roadway. See File Nos. 06.04-16 thru -18 for details when roadway is superelevated greater than 2 percent.

D. Transitions and minimum curve radii shall be in accordance with VDOT L&D *Road Design Manual*, Appendix A, Section A-5.

E. When the distance between the edge of shoulder and the edge of shared use path is less than 5 feet, a physical barrier is required. When the approaches of the shared use path are at grade, a raised sidewalk is not required on the bridge.

On curb and gutter roadways, when the distance from the face of curb to the edge of shared use path is less than 5 feet 6 inches, a physical barrier is required.

Where a physical barrier is required, the barrier shall be a minimum of 54” high on structures and crash tested. The appropriate VDOT standard BR27C or BR27D series rail may be used. For barrier separated shared use path, see VDOT *Road Design* Manual, Appendix A, Section A-5 for barrier termination details and File Nos. 06.07-2 thru -3 for additional information when used in conjunction with approach slabs.

When the sidewalk on the approaches of a bridge is not needed in the bridge area, the bridge designer shall consult the road designer on the method of transition from the road typical section to the bridge typical section. On curved bridges with tight radii, the stopping sight distance to the barrier shall be investigated with the road designer.

F. Drainage accommodations shall be made as required by calculations.

G. Combination traffic and bicycle railing shall be crash tested. The minimum railing height shall be 54“ on structures. The appropriate VDOT standard BR27C or BR27D series rail may be used adjacent to vehicular traffic.

H. Pedestrian and bicycle railing shall be designed in accordance with AASHTO *LRFD Bridge Design Specifications*. The minimum railing height shall be 54” on structures. The appropriate VDOT standard BR27C or BR27D series rail may be used for non-vehicular traffic. Pedestrian fence/screening shall be used in accordance with and meet the minimum opening requirements of Part 2 Chapter 30 of this manual. Where protective screening is required/desired, fencing may be placed behind the railing or incorporated into the railing design.

For continuation of notes, see next sheet.

Notes (continued):

I. Where abutment fill slopes of 1 : 2 or greater exist and fill height is greater than 10 feet, abutments and fills shall be detailed to provide a minimum of 5 feet between the edge of shared use path and the slope breakpoint.

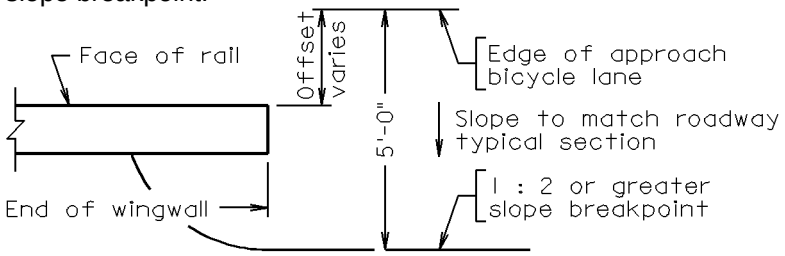

J. Where the roadway is superelevated at a rate greater than 2 percent, the 2 percent maximum cross slope across the shared use path shall be maintained by means of a slope break in the deck. On the low side of the bridge typical section, beams/girders shall be placed such that no modification in position is necessary for future widening. On the high side of the bridge typical section, beams/girders shall be placed for the design bolster and additional bolster will be necessary if widened in the future. See Chapter 10, Concrete Deck Slab, of this manual for bolster reinforcement requirements. Bridge screeds can accommodate the change in cross slope. Transverse reinforcement details may require modification depending on the relative position of the cross-slope break to the beam/girder. Top and bottom bars should be spliced away from maximum negative and positive moment areas respectively.

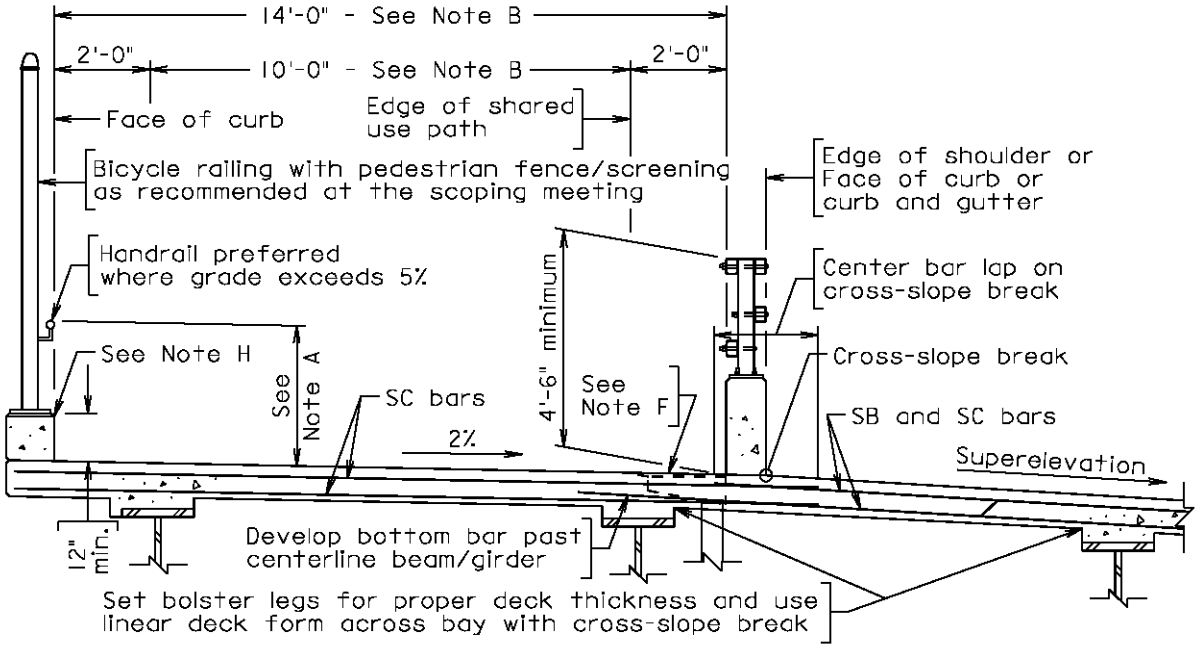

TYPICAL SECTION OF SHARED USE PATH (SUP)

Shown with steel girders. Required when design speed > 45 mph.
Recommended when design speed ≤ 45 mph for bridge lengths > 200 feet.

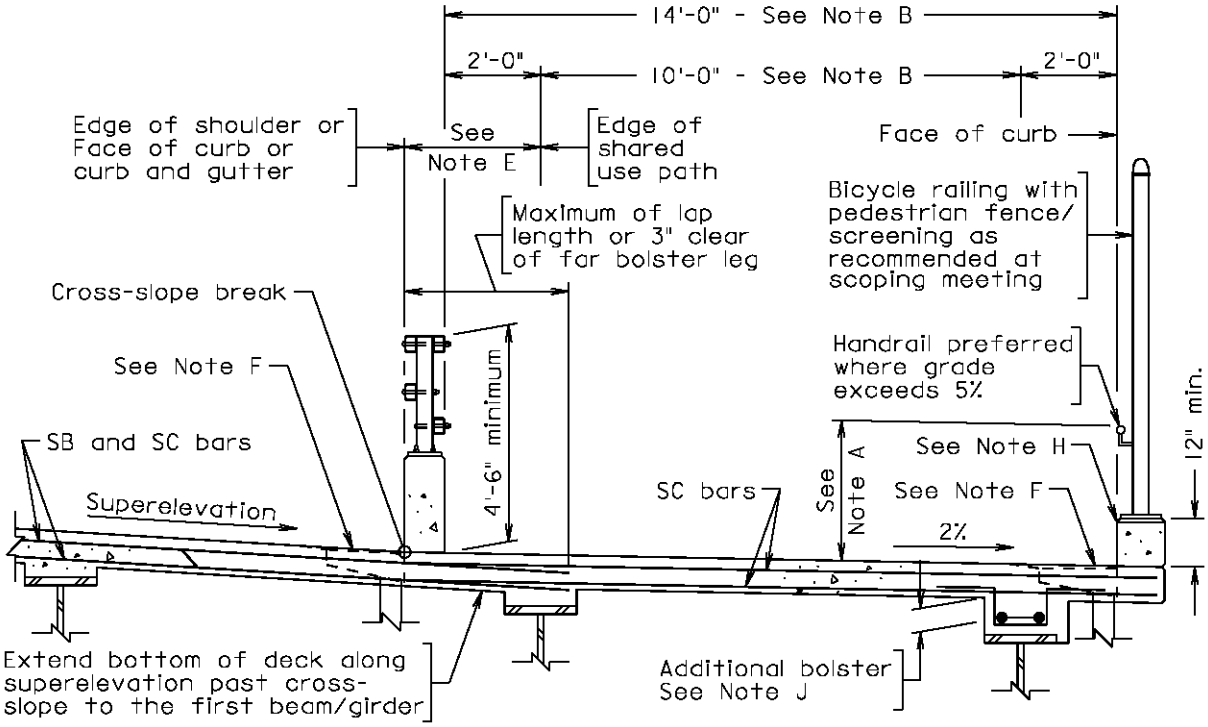

TYPICAL SECTION OF SHARED USE PATH (SUP)

Shown with steel girders. Required when design speed > 45 mph.
Recommended when design speed ≤ 45 mph for bridge length > 200 feet.

For notes, see File Nos. 06.04-14 and -15.

GEOMETRICS **PEDESTRIAN AND / OR BICYCLE FACILITIES** **SUPERELEVATED STRUCTURE WITH SUP - BARRIER**	PART 2 DATE: 18May2016 SHEET 16 of 18 FILE NO. 06.04-16

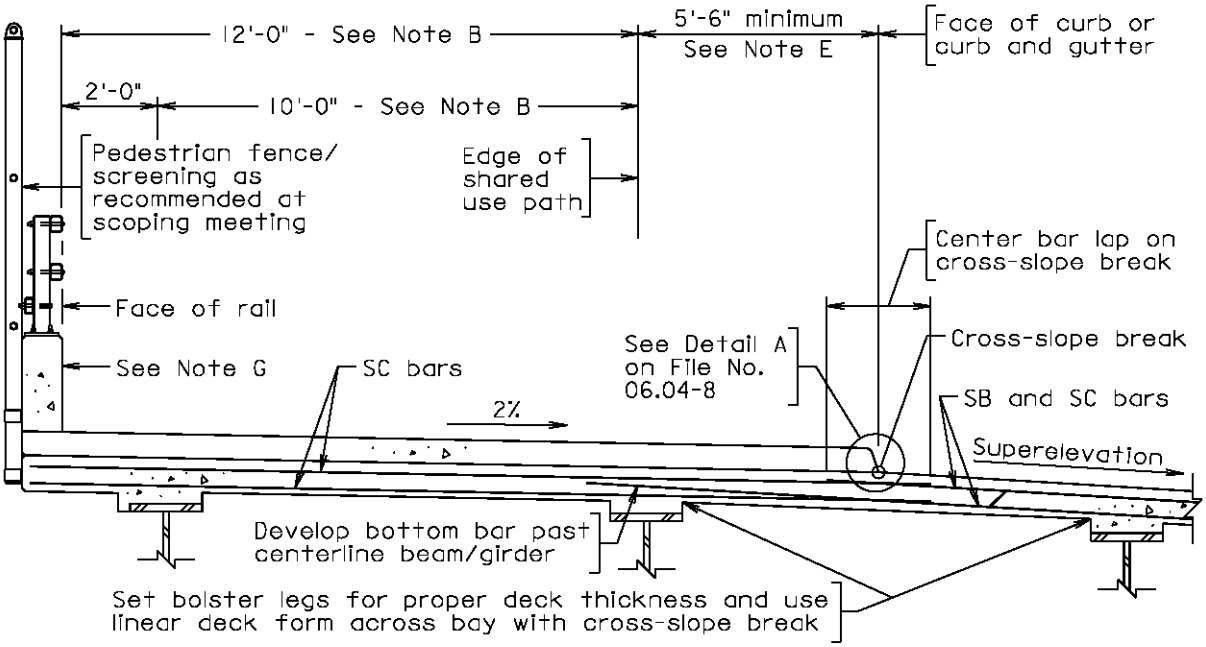

TYPICAL SECTION OF SHARED USE PATH (SUP)

Shown with steel girders

Design speed ≤ 45 mph

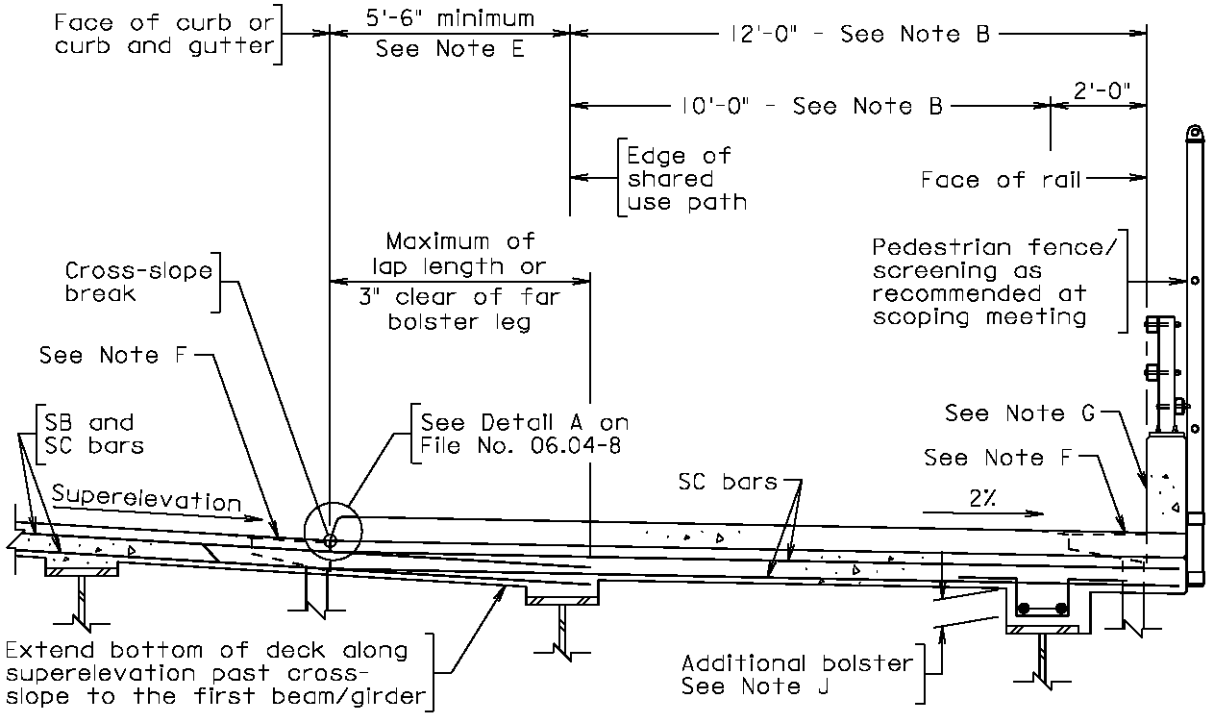

TYPICAL SECTION OF SHARED USE PATH (SUP)

Shown with steel girders

Design speed ≤ 45 mph

For notes, see File Nos. 06.04-14 and -15.

GEOMETRICS **PEDESTRIAN AND BICYCLE FACILITIES** **SUPERELEVATED STRUCTURE WITH SUP - CURB**	PART 2 DATE: 18May2016 SHEET 17 of 18 FILE NO. 06.04-17

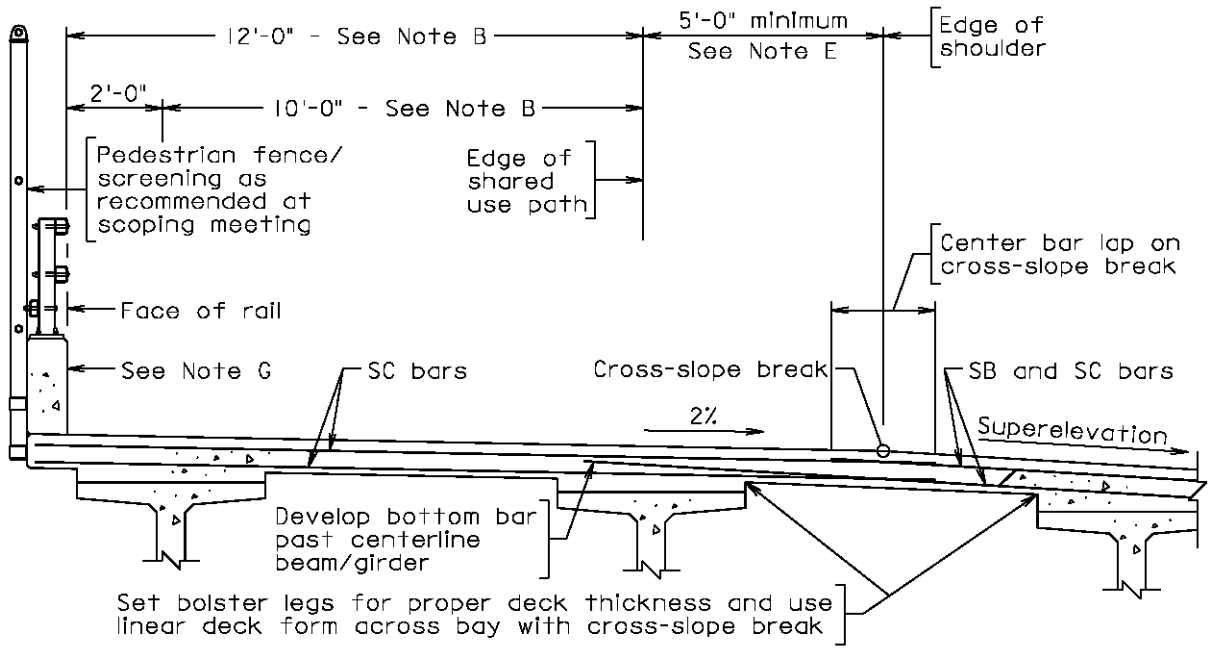

TYPICAL SECTION OF SHARED USE PATH (SUP)

Shown with prestressed concrete bulb-T's

Design speed ≤ 45 mph

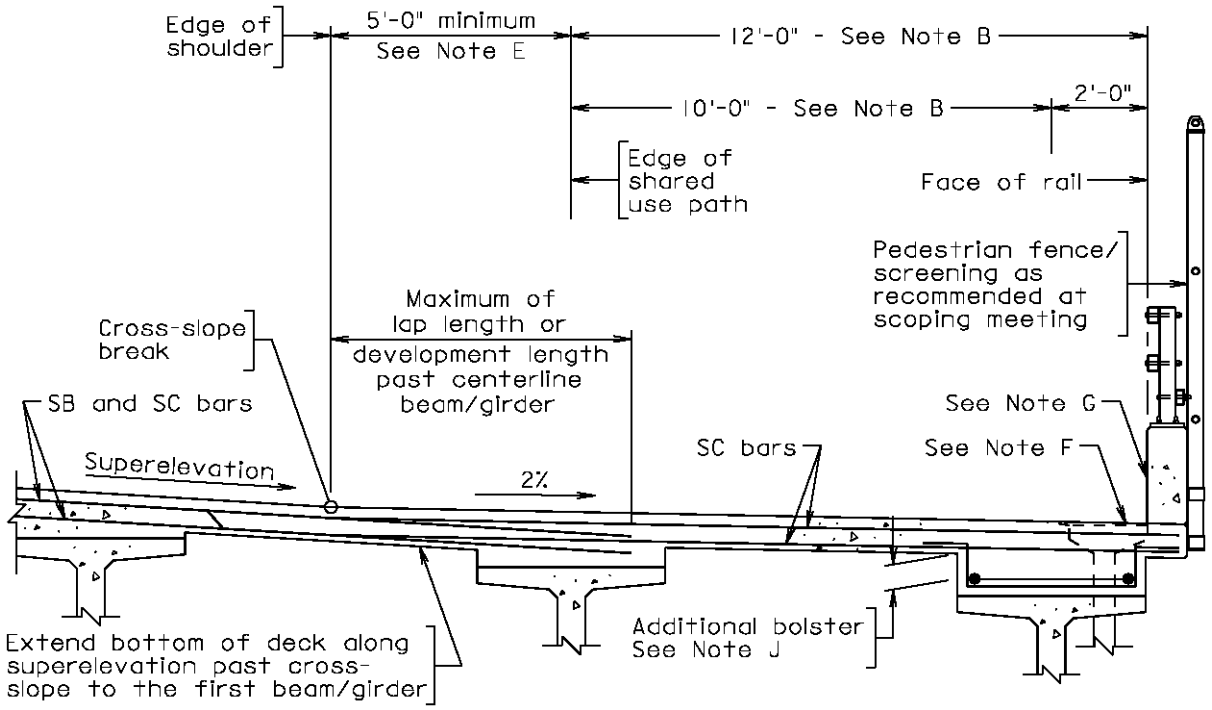

TYPICAL SECTION OF SHARED USE PATH (SUP)

Shown with prestressed concrete bulb-T's

Design speed ≤ 45 mph

For notes, see File Nos. 06.04-14 and -15.

GEOMETRICS **PEDESTRIAN AND BICYCLE FACILITIES** **SUPERELEVATED STRUCTURE WITH SUP - SHOULDER**	PART 2 DATE: 18May2016 SHEET 18 of 18 FILE NO. 06.04-18

General HOV Information:

The typical sections shown on the following sheets were taken from AASHTO *Guide for High-Occupancy Vehicle (HOV) Facilities*, 2004.

The use of cross sections less than those shown on the following sheets impacts the operation and enforcement of a HOV facility. Special operational practices and/or treatments may be necessary and investigated if a design waiver/exception is pursued.

For extension of existing HOV facilities built prior to these geometric guidelines, a design exception is required if the current geometrics are not met. Bridge shoulders should match the roadway typical section.

High-Occupancy Toll (HOT) lanes shall adhere to the geometrics for HOV facilities. See FHWA *Guide for Hot Lane Development* for additional information.

Notes for File Nos. 06.05-2 thru -5:

A. The minimum vertical clearance shall be 16'-6".

B. Bridge pier columns including protective measures when required should be placed outside the required roadway shoulders. When this is not feasible, the designer should meet the shy line offsets provided in Table A-3-3, Appendix A, VDOT *Road Design Manual*. An absolute minimum of 2'-0" lateral clearance shall be provided to adjacent barriers or other crash worthy obstructions for the HOV lanes or as dictated to provide adequate sight distance in areas with horizontal curvature.

C. Guardrail or median barrier shall be used as shown when the required minimum horizontal clearance cannot be provided or such clearance cannot be economically justified. For guardrail offset, see Tables 1 and 2 on Standard GR-INS, sheet 6 of 8, VDOT *Road and Bridge Standards*. Offset should be coordinated with the road designer.

D. When required, guardrail shall be located to provide the clearance shown on Standard GR-INS, sheet 3 of 8, VDOT *Road and Bridge Standards* corresponding to the maximum dynamic deflection of the guardrail being used. The overall dimension shall account for the guardrail width and should be coordinated with the road designer.

E. For additional requirements for curved bridges and tangent bridges with a horizontal curve located on the roadway at either end, see File No. 06.03-1.

F. For geometric requirements for freeways, see File No. 06.02-1. For geometric requirements for ramp structures, see File No. 06.02-13.

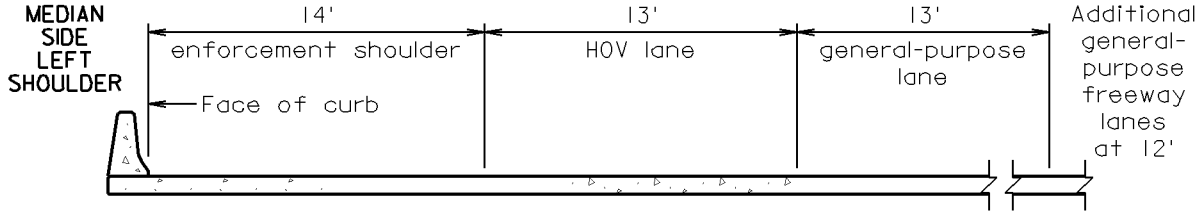

WITH ENFORCEMENT SHOULDER

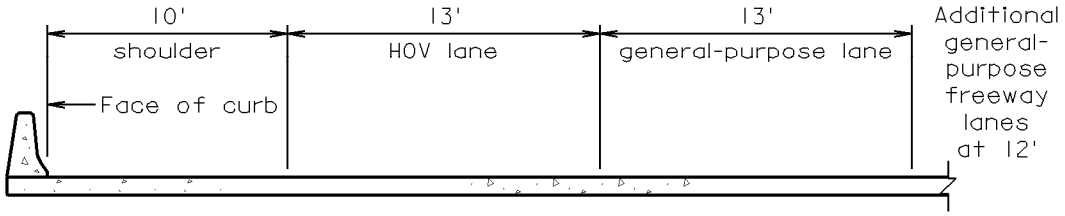

WITHOUT ENFORCEMENT SHOULDER

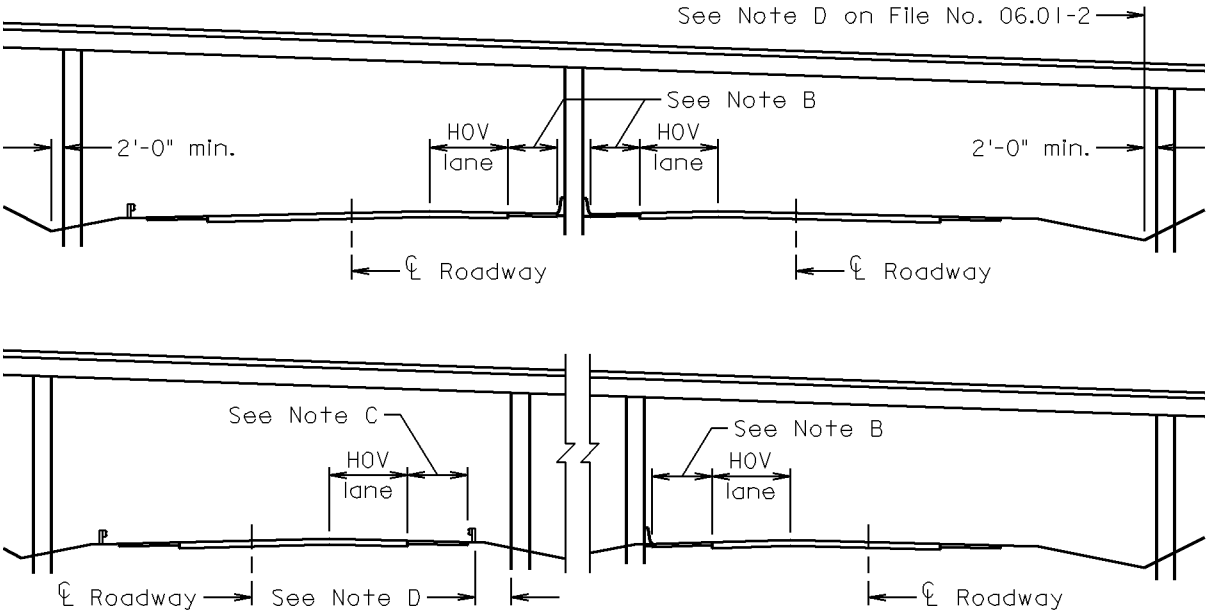

NONSEPARATED CONCURRENT FLOW HOV (FREEWAYS)

See File No. 06.05-1 for notes

GEOMETRICS **HOV FACILITIES ON FREEWAYS** **NON-SEPARATED CONCURRENT FLOW HOV LANE(S)**	VOL. V - PART 2 DATE: 14Jun2010 SHEET 2 of 5 FILE NO. 06.05-2

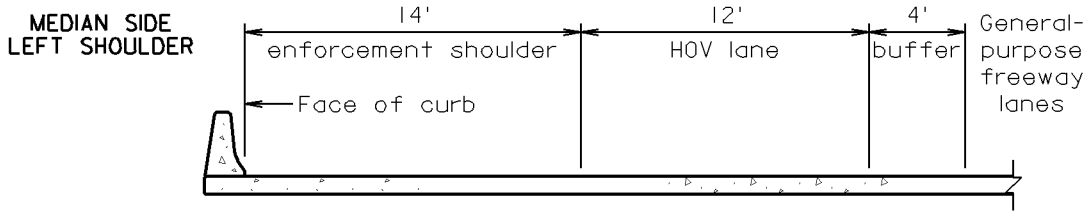

WITH ENFORCEMENT SHOULDER

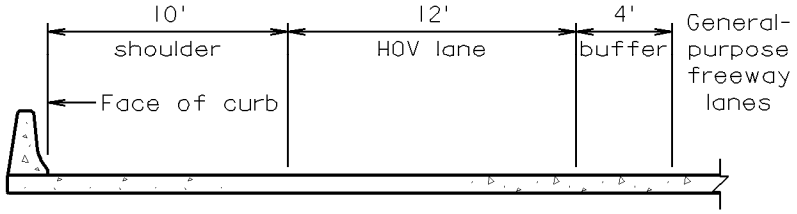

WITHOUT ENFORCEMENT SHOULDER

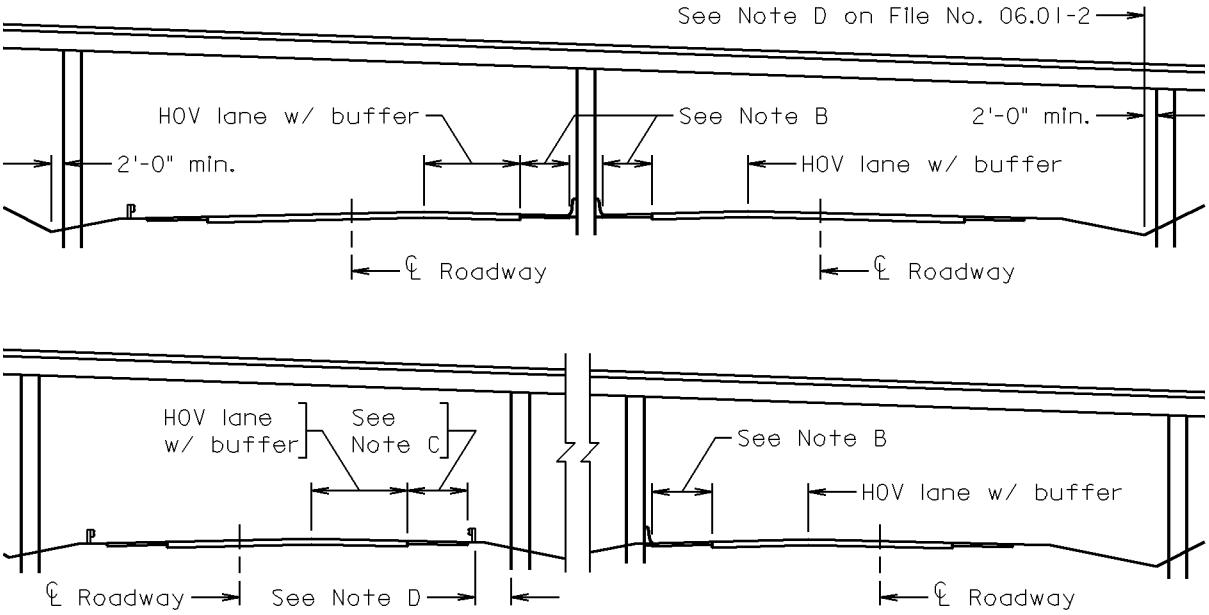

BUFFER-SEPARATED CONCURRENT FLOW HOV LANE(S)

See File No. 06.05-1 for notes

GEOMETRICS **HOV FACILITIES ON FREEWAYS** **BUFFER-SEPARATED CONCURRENT FLOW HOV LANE(S)**	VOL. V - PART 2 DATE: 14Jun2010 SHEET 3 of 5 FILE NO. 06.05-3

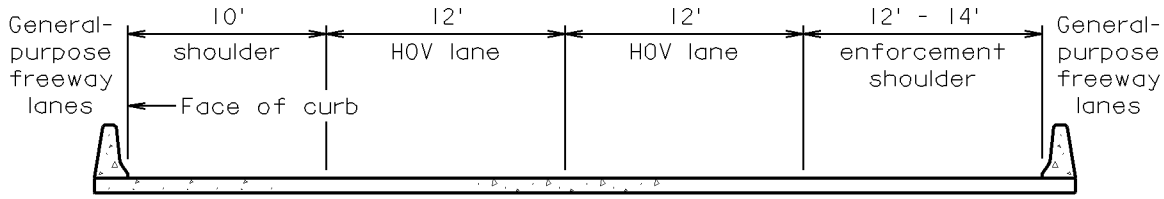

WITH ENFORCEMENT SHOULDER

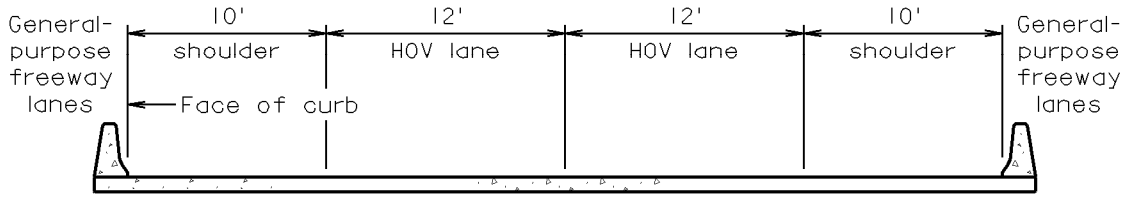

WITHOUT ENFORCEMENT SHOULDER

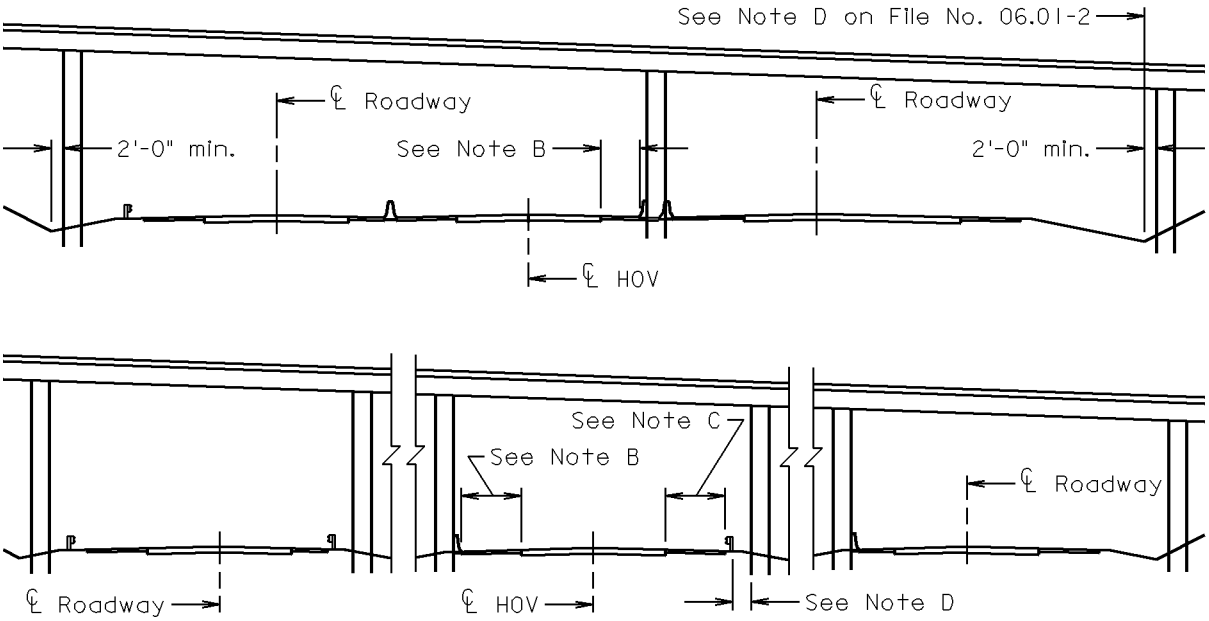

BARRIER-SEPARATED REVERSIBLE HOV – TWO-LANE

See File No. 06.05-1 for notes

GEOMETRICS **HOV FACILITIES ON FREEWAYS** **BARRIER-SEPARATED REVERSIBLE HOV – TWO-LANE**	VOL. V - PART 2 DATE: 14Jun2010 SHEET 4 of 5 FILE NO. 06.05-4

*Face-to-face of curb widths greater than 22 feet may invite passing and are undesirable.

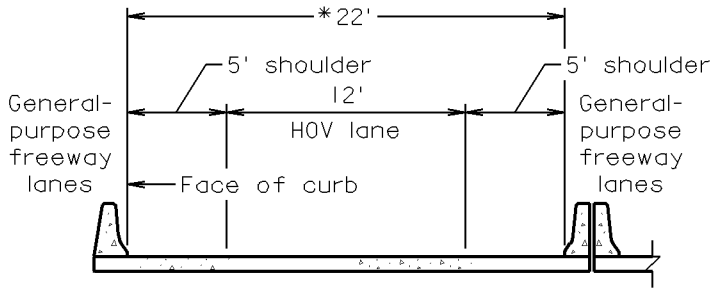

TYPICAL SECTION

Shown immediately adjacent to parallel structure on right

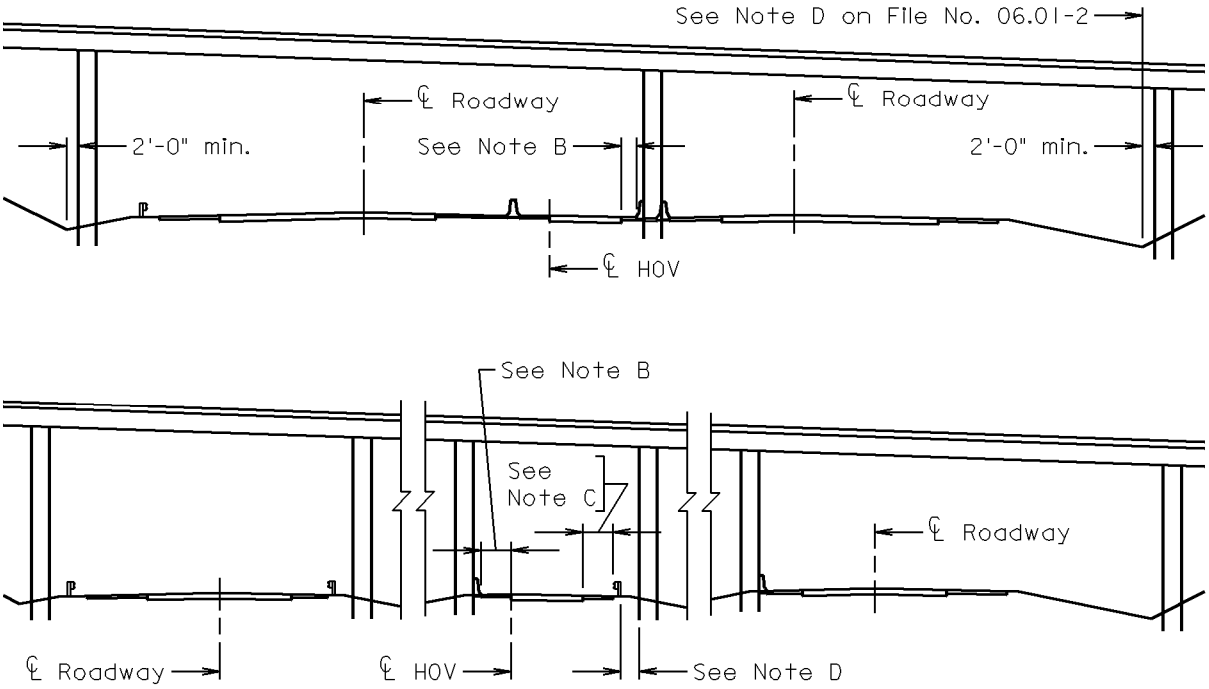

BARRIER-SEPARATED REVERSIBLE HOV – SINGLE LANE

See File No. 06.05-1 for notes

GEOMETRICS **HOV FACILITIES ON FREEWAYS** **BARRIER-SEPARATED REVERSIBLE HOV – SINGLE LANE**	VOL. V - PART 2 DATE: 14Jun2010 SHEET 5 of 5 FILE NO. 06.05-5

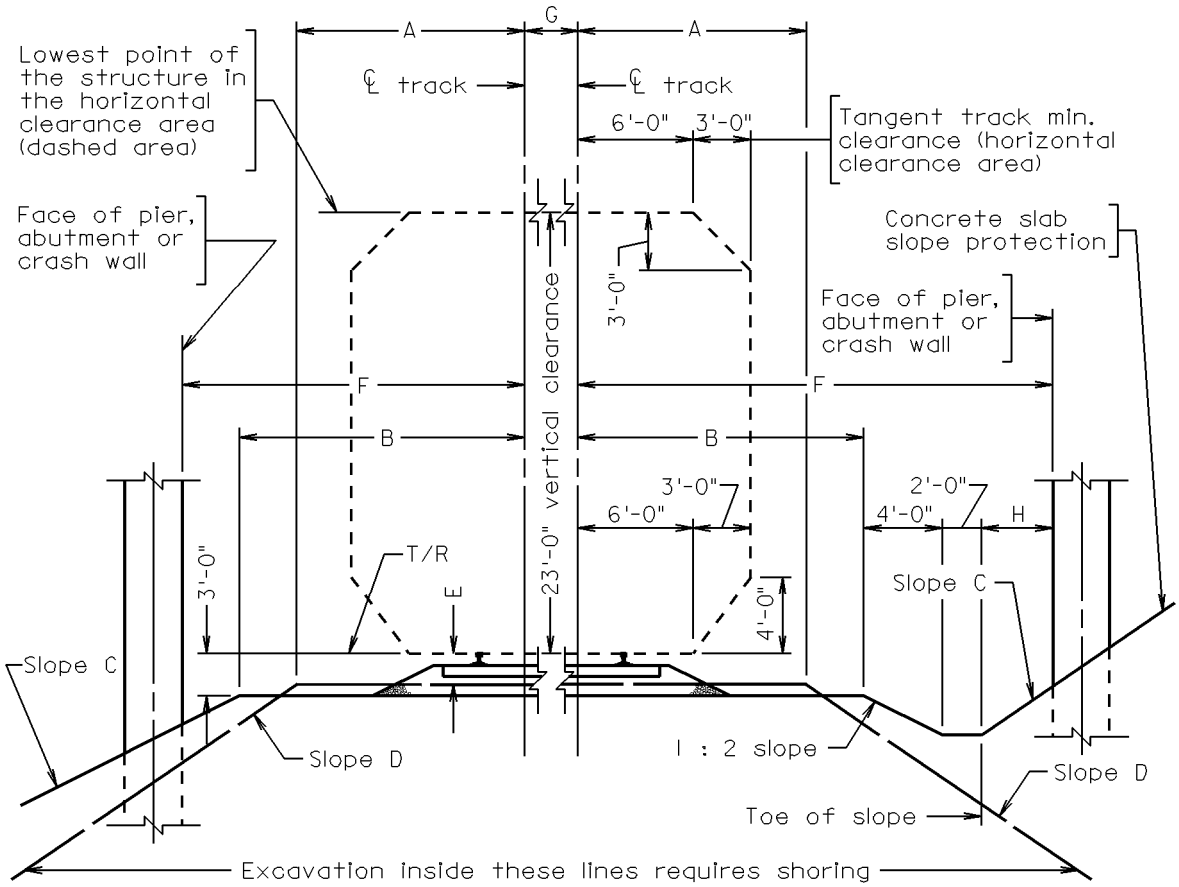

SECTIONS PERPENDICULAR TO TRACK

DIMENSION TABLE		
	Norfolk Southern Railway	CSX Transportation
A	14'-0"	12'-0"
B	14'-0" (18'-0" with maintenance road)	15'-0" (12'-0" yard track)
Slope C	1 : 2	1 : 2 (may increase to 1 : 1½ in fill sections)
Slope D	1 : 2	1 : 1½
E	3'-7¼"	1'-6"
F	22'-0" (26'-0" with maintenance road)	∗ 25'-0"
G	14'-0"	15'-0"
H	2'-0"	4'-0"

∗ Standard horizontal clearance shall typically be 25'-0" or greater. Horizontal clearance < 25'-0", but ≥ 18'-0", is acceptable with VDOT concurrence and CSX Transportation approval.

For notes, see next sheet.

Notes:

T/R – Denotes top of rail or top of high rail.

All geometrics shown herein are for CSX Transportation and Norfolk Southern Railway. Values shown are those which would normally be acceptable to the railroad. Other railroad companies are required to submit a formal request for clearances to the office of VDOT Structure and Bridge Division for review, consideration and approval.

Horizontal clearances may be increased, as requested by the railroad company and with concurrence of the Department, to accommodate future tracks, access roads, and other railroad facilities.

A statement for additional space for off-track equipment (8 feet maximum) shall be required. For two or more tracks, if the railroad company requests clearances for off-track equipment on both sides, detailed specifics are required.

Edges of footing shall not be closer than 11'-0" (13'-0" for Norfolk Southern Railway) from centerline of the track to provide adequate room for sheeting.

Values may be increased depending on track template and span arrangement, e.g., to make all spans equal, continuous layouts, etc.

Vertical clearance on superelevated track is measured from the top of high rail to the lowest point of the structure in the horizontal clearance area. Vertical clearance shown is the maximum a railroad may request without justification.

When sheeting for excavation is used, face of sheeting shall be at a distance not less than 10 feet from ℄ track. The sheeting shall be designed and the details shall be included in the plans. Design calculations and three sets of detailed drawings (four for Norfolk Southern Railway) shall be submitted to the railroad for review and approval. See VDOT L&D *Road Design Manual*, pages 2E - 25 thru - 27.

Drainage from bridge deck drains must be conveyed through pipes and drained away from railroad property.

For sections and dimension table, see previous sheet.

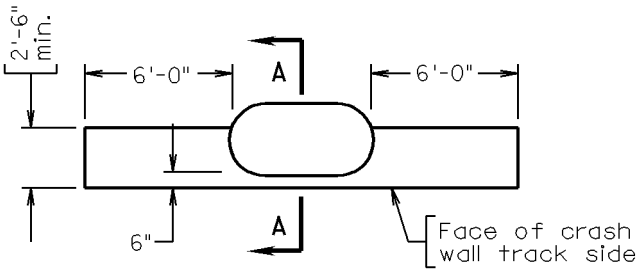

SINGLE COLUMN

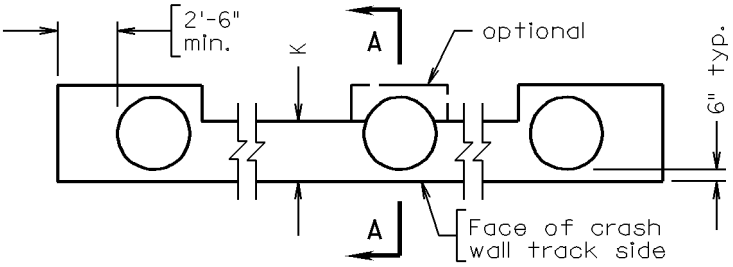

MULTI COLUMN

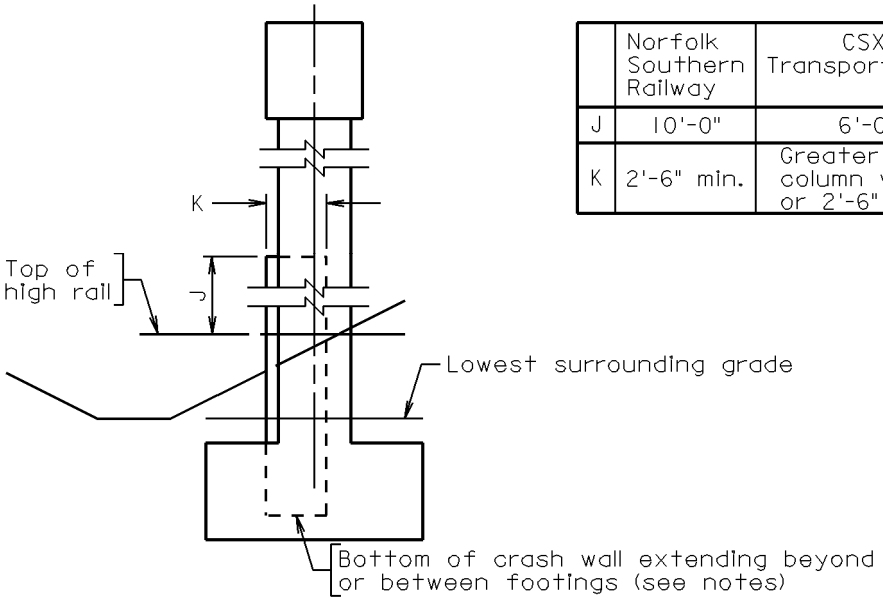

	Norfolk Southern Railway	CSX Transportation
J	10'-0"	6'-0"
K	2'-6" min.	Greater of column width or 2'-6"

SECTION A-A

CRASH WALL DETAILS

For notes, see next sheet.

GEOMETRICS **BRIDGES OVER RAILROADS** **CRASH WALL REQUIREMENTS**	VOL. V - PART 2 DATE: 14Jun2010 SHEET 3 of 4 FILE NO. 06.06-3

Notes:

The dimensions and details provided in this section are the minimum requirements from the AREMA and railroad publications. For suggested detailing of piers adjacent to railways adhering to these minimums and suggested design for collision force, see Chapter 15, Pier Details.

Piers having less than 25 feet horizontal clearance from the centerline of a main or passing railroad track shall be of heavy construction or shall be protected by a reinforced concrete crash wall. Columns shall be considered of heavy construction if they have a cross-sectional area equal to or greater than 30 sf (50 sf for CSX Transportation) and the larger of its dimensions is parallel to the track. Use of and orientation of columns for straddle piers requires VDOT approval during the preliminary design phase. When economically feasible, piers should be located at a distance from centerline of the track so that neither the crash wall nor the sheeting for excavation near the tracks will be needed.

The crash wall shall extend to not less than 6 feet (10 feet for Norfolk Southern Railway) above top of rail for piers 12 to 25 feet from the centerline and 12 feet above top of rail for piers less than 12 feet from the centerline. The face of a crash wall shall extend a distance of at least 6” beyond the face of the column(s) on the side adjacent to the track.

When two or more light columns compose a pier, a wall at least 2’-6” thick for Norfolk Southern Railway or the greater of column width or 2’-6” for CSX Transportation shall connect the columns and extend at least 2’-6” beyond the outermost columns.

When a pier consists of a single column with a stem less than 3 feet in width and 12 feet in length, it shall be protected by a crash wall parallel to the track. The wall shall be at least 2’-6” thick and shall extend for a distance of at least 6 feet from both sides of the column.

Reinforcement for the crash wall shall be anchored to the column(s) and footing(s) with adequate reinforcement.

Bottom of crash wall shall extend a minimum of 4 feet below the lowest surrounding grade. When rock is encountered and this is not practical, the wall may be socketed a minimum of 12” into competent rock provided that the rock is not fractured.

When mechanically stabilized earth, MSE, walls are used in front of the abutments, the minimum horizontal clearance shall be 25 feet. Abutments with spread footings shall not be used behind the MSE wall. Abutment piles shall not be within 6 feet of the wall face unless approved by the Geotechnical Section of the S&B Division.

For maintenance and repair projects, these guidelines will be evaluated on a case by case basis.

See AASHTO *LRFD Bridge Design Specifications*, Article 11.7.2.2, AREMA *Manual for Railway Engineering*, Vol. 2, pg. 8-2-6, Article 2.1.5, Norfolk Southern *Overhead Grade Separation Design Criteria* and CSX Transportation *Criteria for Overhead Bridges.*

For details and dimension table, see previous sheet.

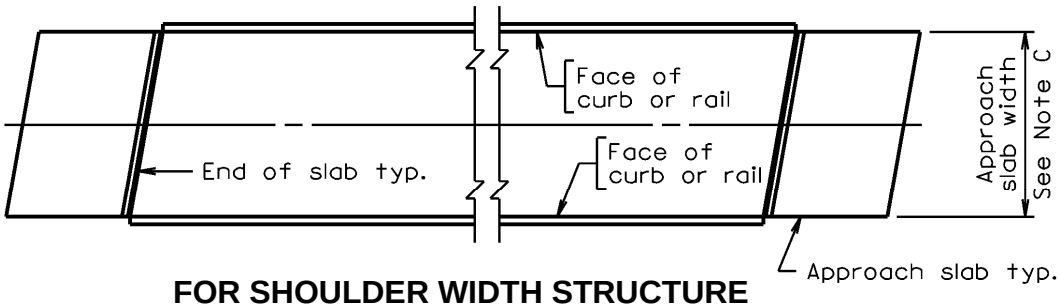

FOR SHOULDER WIDTH STRUCTURE

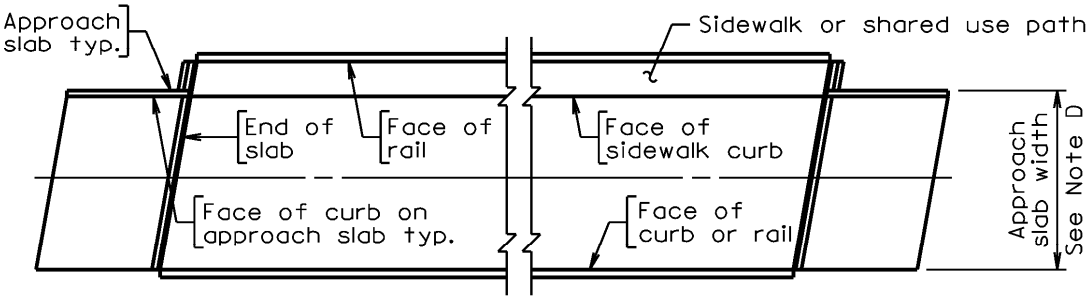

STRUCTURE WITH SIDEWALK / SHARED USE PATH (SUP)

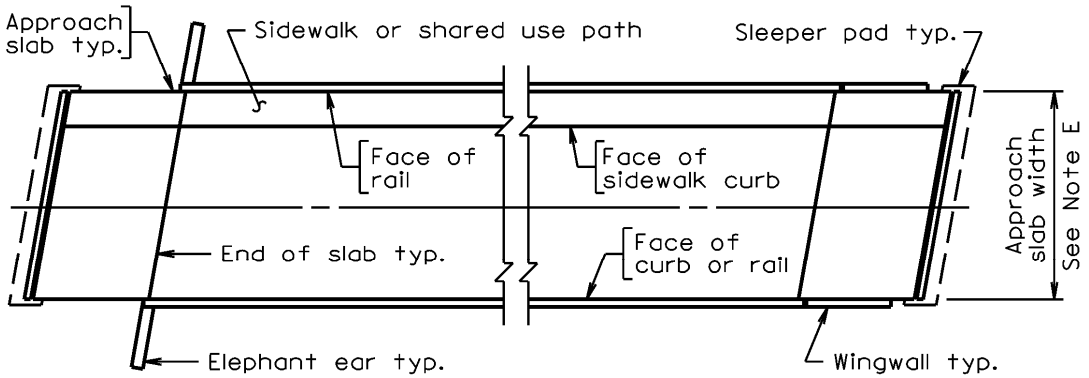

STRUCTURE WITH SIDEWALK / SUP AND FULL / SEMI-INTEGRAL ABUTMENTS

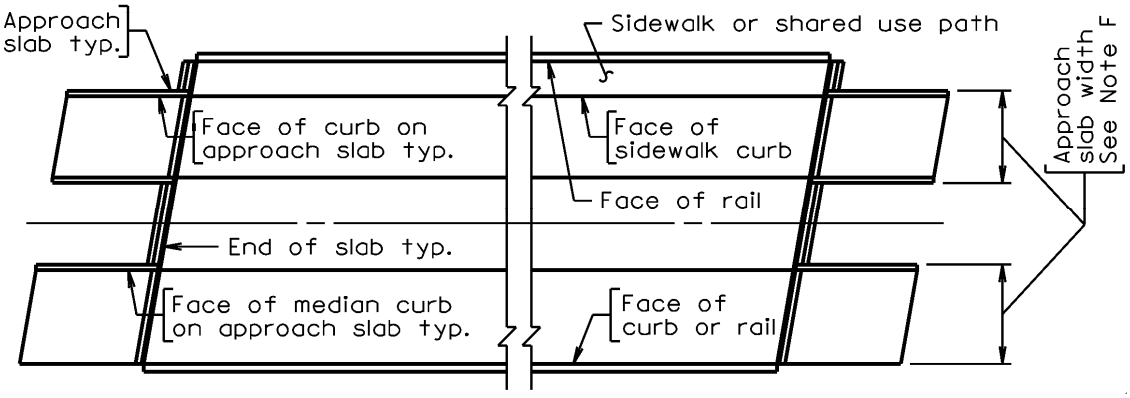

STRUCTURE WITH MEDIAN

For notes, see next sheet.

GEOMETRICS **APPROACH SLABS**	VOL. V - PART 2 DATE: 09July2012 SHEET 1 of 4 FILE NO. 06.07-1

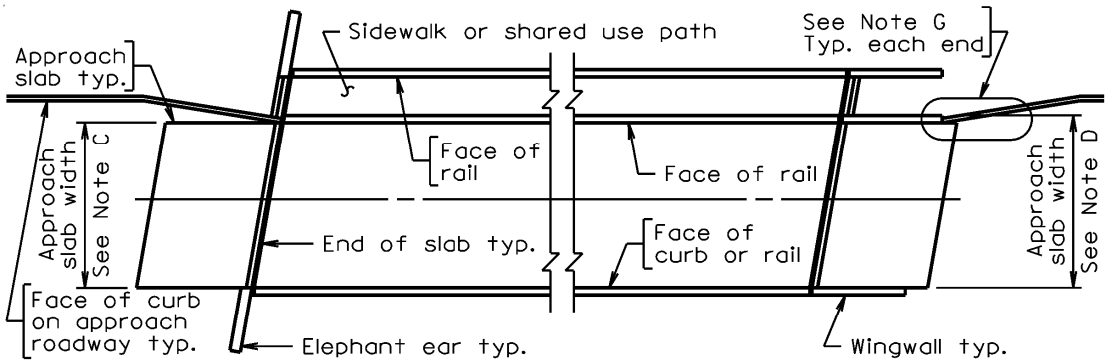

STRUCTURE WITH BARRIER SEPARATED SIDEWALK / SHARED USE PATH

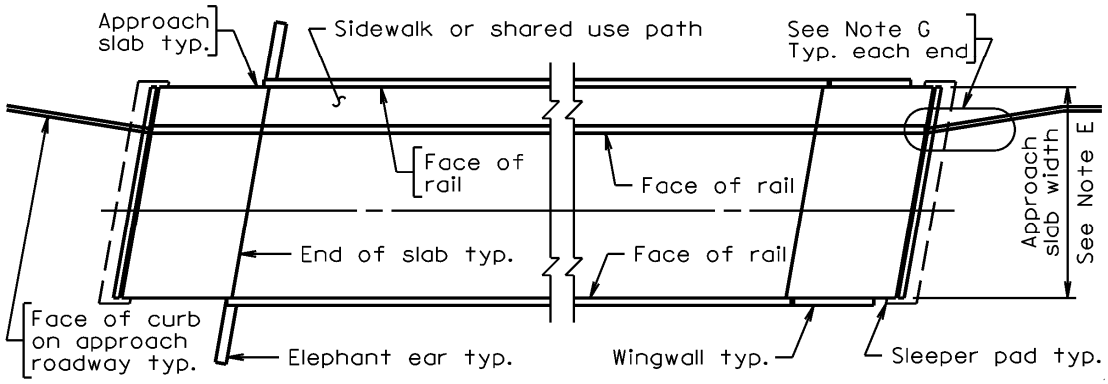

STRUCTURE WITH BARRIER SEPARATED SIDEWALK / SHARED USE PATH AND FULL / SEMI-INTEGRAL ABUTMENTS

Notes:

A. Structural approach slabs are to be used in initial construction of all Freeway and Arterial structures. Structural approach slabs are to be used in initial construction of all other structures (except Secondary System), with a DHV per lane over 250 and an ADT per lane over 1700. Per lane values may be obtained by dividing the design year DHV and ADT by the number of lanes. The District Structure and Bridge Engineer (DSBE) will have the option of using approach slabs in the remaining cases including Secondaries. Structural approach slabs are also required for ramp structures and consideration should be given to their use on structures in other specific cases of high traffic volume. Abutments are to be designed and detailed to support approach slabs whether included or not in initial construction except on Secondaries or where purposefully omitted (see Note B).

B. When, in the best engineering judgment of the DSBE, it is deemed not to be appropriate to use approach slabs on a non-interstate structure, the DSBE will place a document in the project file indicating the reasons why approach slabs are not appropriate and the functional classification, current ADT, % trucks, future (design) ADT and year. A design waiver request form is not required.

For continuation of notes, see next sheet.

Notes (continued):

C. Approach slab width shall be face-to-face of curb.

D. Approach slab width shall include the width of curb.

E. For full and semi-integral abutments with pedestrian and/or bicycle facilities and approach slabs, the approach slab width shall be extended to the face of outside rail.

F. Approach slabs for structures with raised medians shall include the width of curb. Where median width is 6 feet or less, consideration shall be given to extending the approach slab across the width of the median.

For full and semi-integral abutments with median and approach slabs, extend the approach slab across the width of the median.

G. For barrier separated sidewalk and barrier separated shared use path, see VDOT *Road Design Manual*, Appendix A, Section A-5 for barrier termination details.

For abutment with wingwalls, barrier termination details cannot begin until end of wingwall where sidewalk can begin transitioning to roadway typical section unless wingwall is flared accordingly. Approach slab width shall include the width of barrier and consideration shall be given to carrying barrier to end of approach slab.

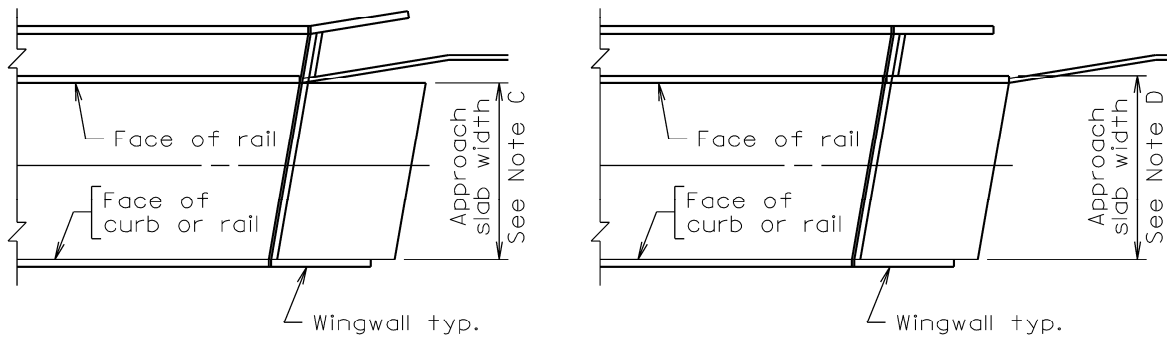

For full and semi-integral abutments with pedestrian and/or bicycle facilities and approach slabs, the approach slab width shall be extended to the face of outside rail. Barrier termination details shall begin at sleeper pad.

H. The example structures provided on File Nos. 06.07-1 and -2 are intended to provide required approach slab widths. They are not intended to depict all possible cases at a bridge end (i.e, substructure layout, abutment configurations, etc.) or details to be worked out by designer. Wingwalls, elephant ears and approach slab seat are not depicted for structures with joint.

I. Approach slabs shall be grooved.

For continuation of notes, see next sheet.

Notes (continued):

J. Structural approach slabs will be detailed complete on one sheet. No other details will appear on this sheet. A reinforcing steel schedule will be shown and total quantities will be given for reinforcing steel, Class A4 concrete, approach slab grooving, asphalt concrete when a bituminous concrete overlay is used and the joint between the approach slab and sleeper pad when used with integral and semi-integral abutments. When sleeper pads are used, reinforcing steel and concrete quantities shall be provided for the approach slab and sleeper pad and totaled. Standard plans should be used where applicable. For standard details, see VDOT *Manual of the Structure and Bridge Division*, Volume V- Part 3, Current Details, BAS-series.

K. Approach slabs are included in the bridge plans only. For approach slab bid items, refer to bridge superstructure bid items:

   Concrete Class A4 Bridge Appr. Slab
   Reinf. Steel Bridge Approach Slab

   For each bid item, sum the quantities at all substructure locations and provide the total in the Estimated Quantities table as shown in File Nos. 03.01-1 thru -3. The summation includes sleeper pad quantities when used with integral and semi-integral abutments. Approach slab grooving quantities shall be included in the quantity for Bridge Deck Grooving (superstructure).

   When sleeper pads are used with integral and semi-integral abutments, coordinate with the District Structure and Bridge office on the preferred joint type between the approach slab and sleeper pad and include the corresponding superstructure bid item summation in the Estimated Quantities table.

   When approach roadway is asphalt concrete, coordinate with the road designer on type to be placed on approach slab and include the corresponding superstructure bid item summation in the Estimated Quantities table.

L. For full and semi-integral abutments with full-width approach slabs, sliding plates at the joint between the approach slab and sleeper pad are required in sidewalk, signed shared roadway, bicycle lane and shared use path areas. Maximum plate thickness is ½". Thicknesses greater than ¼" require beveled edges perpendicular to traffic.

M. Reference: VTRC *Guidelines for the Use, Design, and Construction of Bridge Approach Slabs*

BRIDGE ONLY PROJECTS – GENERAL INFORMATION:

The purpose of this section is to provide guidance on VDOT requirements and policies in regards to project limits and bridge parapet/rail termination on Bridge Only projects.

Bridge Only projects involve parapet/rail, deck, superstructure or bridge rehabilitation or replacement with little to no roadway work involved. These projects originate as bridge projects with minimal improvements to the existing roadway and are not part of a road project. Minimal improvements to the existing roadway may include minor alterations to vertical and/or horizontal alignment, minor land and/or shoulder widening, pavement structure and joint repair, resurfacing, removal or protection of roadside obstacles and guardrail installation. When Bridge Only projects have a UPC, they are indicated as Bridge Only in iPM.

All project requirements not specifically discussed in this section shall be adhered to and remain the responsibility of the respective Divisions. Examples include the following:

- Current IIM-LD-11, Program Administration and Minimum Requirements for the Development and Implementation of Erosion and Sediment Control and Post Construction Stormwater Management Plans;
- Current IIM-LD-195, Minimum Requirements for the Engineering, Plan Preparation and Implementation of Post Development Stormwater Management Plans;
- Current IIM-LD-242, General Virginia Stormwater Management Program (VSMP) Construction Permit;
- Current IIM-LD-246, Stormwater Pollution Prevention Plan Documents and Components;
- Current Stormwater Program Advisory SWPA 12-01 and 12-02.

BRIDGE ONLY PROJECTS – PROJECT LIMITS:

Project limits should be established at the scoping stage of the Bridge Only project and define the area within which current standards must be met.

For complete criteria for establishing project limits for Bridge Only projects, see:

- File No. 06.08-4 for projects **with** existing guardrail.
- File No. 06.08-6 for projects **without** existing guardrail.

Horizontal or vertical geometric changes:

For Bridge Only projects, the length of transition for bridge approach widening used will depend on whether horizontal and/or vertical geometric changes are involved. Examples of horizontal and/or vertical changes include:

1. Change in horizontal alignment to increase curve radii on approach roadway.
2. Change in horizontal alignment to construct new bridge adjacent to the existing bridge.
3. Increase in vertical alignment to accommodate additional hydraulic opening and/or superstructure depth.

An increase in bridge width from existing to meet current standards is not considered a geometric change unless all or the majority of a structure is widened to one side to shift (and benefit) the horizontal alignment of the roadway.

BRIDGE APPROACH PAVEMENT WIDENING:

In accordance with VDOT *Road Design Manual (*RDM), Appendix A, Section A-1:

For Bridge Only Projects **<u>with</u>** horizontal and/or vertical geometric changes (see File No. 06.08-1 for examples of geometric changes), the length of transition (L) for bridge approach pavement widening is computed as:

$L = S^2 \times W / 60$ for design speed < 45 mph

$L = W \times S$ for design speed $\geq$ 45 mph

Where: L = Length of transition, feet
S = Design speed, mph
W = Maximum width of offset on either side of roadway centerline/baseline (i.e., bridge shoulder), feet

For Bridge Only Projects **with <u>no</u>** horizontal and/or vertical geometric changes, the length of transition for bridge approach pavement widening is 0.5L.

For un-posted roadways, the statutory speed limit is 55 mph. Where site conditions could inhibit traveling at the design speed where the bridge is located, operating speed may be used when considering the roadway geometrics at the location. The Designer needs to coordinate with the Traffic Engineering Division project representative for determination of an appropriate operating speed. At some locations, a recent speed study may already be on file or curve warning signs with advisory speeds may already be in place for the road segment in which the bridge is located. A speed study will provide an 85th percentile speed and will determine if the roadway is posted appropriately. The Designer can use this information to determine an appropriate operating speed for the project.

For structures with at-grade approach slabs, L or 0.5L shall extend beyond the approach slab. Where buried approach slabs are used, L or 0.5L shall extend as shown on the left hand side of the sketch below (i.e., without at-grade approach slab).

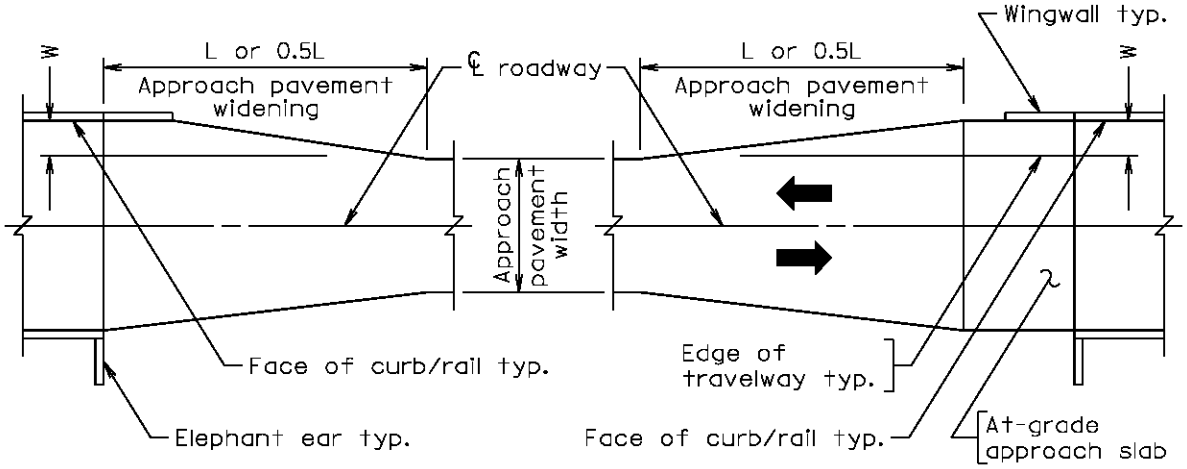

The edge of travelway corresponds to the edge of traffic lane (i.e., does not include any portion of shoulder either paved and/or graded). See sketch for Note A on File No. 06.01-1.

EXISTING GUARDRAIL AT LOCATION – PARAPET/RAIL TERMINATION:

Substandard guardrail and bridge parapet/rail termination requirements:

All existing substandard guardrail systems and components within the project limits shall be upgraded to the latest standard in accordance with current VDOT *Road and Bridge Standards* and current IIM-LD-220.

Note that the guidance on determining the functional condition ratings for existing guardrail systems detailed in current VDOT Traffic Engineering Division Memorandum TE-366 are used to form upgrade strategies (maintenance) for existing guardrail systems. Current IIM-LD-220 provides the policies for replacement and upgrade of guardrail / guardrail components within the project limits for all construction projects.

In accordance with current IIM-LD-220, when the line of guardrail extends outside the project limits with more than 60% of the existing substandard line of guardrail within the project limits, then the entire run shall be replaced and upgraded to meet the current Standards. The project limits need not be extended to the end of the guardrail run. See **Examples 1 and 2** in File No. 06.08-8.

Where the parapet/rail, deck, superstructure or bridge replacement results in a wider structure (face-to-face of curb/rail), the Fixed Object Attachment must remain parallel to the roadway prior to transitioning back to the existing guardrail position. For a given design speed and shy line position (i.e. inside or beyond), flare rates shall not exceed those shown in the VDOT *Road Design Manual*, Appendix A, Section A-3, Table A-3-3. Variable flare rates should not be used where the guardrail transition begins beyond the shy line and transitions inside the shy line or vice versa (i.e. use the flatter of the two). See **Example 3** in File No. 06.08-9.

EXISTING GUARDRAIL AT LOCATION – PROJECT LIMITS:

Establishing project limits:

1. For deck overlay projects or parapet/railing, deck or superstructure replacement without widening, the project limits may coincide with the following:

    a. **Without** horizontal and/or vertical changes, only the guardrail attachments need to be brought up to current standards. Project limits shall be established based on the roadside safety hardware at the bridge parapet/rail (i.e., connection).

    b. **With** horizontal and/or vertical changes, project limits shall extend to the point at which the proposed alignment ties back into the existing alignment.

2. For parapet/railing, deck or superstructure replacement with widening **or** bridge replacement, the project limit on each side of the bridge (established independently of the other) shall extend to the maximum of:

    a. Where the superstructure width increases (face-to-face of curb/rail), the start of the pavement widening (L or 0.5L).

    b. Where the superstructure width increases (face-to-face of curb/rail), the point at which guardrail can be transitioned back to the existing position.

    c. Where there is a horizontal and/or vertical change, the point at which the proposed alignment ties back into the existing alignment.

    d. For a bridge replacement, the limits of excavation required to replace the substructure.

Where upgrading substandard guardrail for the entire length is required or deemed to be in the best interest of the project, there is no need to extend the project limits to the end of the existing guardrail run if the additional work remains in VDOT Right of Way.

NO EXISTING GUARDRAIL AT LOCATION – PARAPET/RAIL TERMINATION:

Termination evaluation process to protect vehicular traffic from the bridge parapet/rail ends (the sample evaluation process provided below is for informational purposes as recommendations are made by the Traffic Engineering Division project team representative and/or the Special Design Section of the Location and Design Division):

1. Evaluate the project for additional hazards warranting protection and determine the corresponding Length of Need as defined in VDOT *Road Design Manual* (RDM) Appendix A, Section A-3, Figure A-3-1. See also VDOT's *Guardrail Installation Training (GRIT) Manual.*

2. Where feasible, terminate the bridge parapet/rail in accordance with VDOT RDM Appendix A and VDOT *Road and Bridge Standards* (e.g., fixed object attachment with a standard GR-7 or GR-9).

3. When terminating bridge parapet/rail in accordance with VDOT RDM Appendix A and VDOT *Road and Bridge Standards* is not feasible, the following will be considered depending on details of existing roadway approaches, additional hazards, site specific crash history, design/operating speed, ADT, etc.:

    a. Modifications to the roadway template to facilitate termination in accordance with VDOT *Road and Bridge Standards*.

    b. Use of impact attenuators at bridge end. Length of attenuator can range from 10 feet to over 30 feet depending on Test Level.

    c. Consider flaring wingwall to place the parapet/rail end outside the clear zone. Flare rate not to exceed those shown in VDOT RDM Appendix A, Section A-3, Table A-3-3.

    The following will require documentation to the project file along with the recommendation from the Traffic Engineering Division project representative and/or Standards/Special Design Section of the Location and Design Division. Object markers are typically only used when other methods of guardrail termination are not feasible or would not reduce the severity of a crash. However, at locations with low design speed, low ADT and no site specific crash history, installing an object marker may be determined to be appropriate even where terminating bridge parapet/rail is feasible in accordance with the standards or by other means.

    d. Consider flaring wingwall to place the parapet/rail end at an angle and reduce the severity of a head-on collision. Flare rate not to exceed those shown in VDOT RDM Appendix A, Section A-3, Table A-3-3. Install an object marker to delineate the parapet/rail end (i.e., the end is still in the clear zone).

    e. Install object marker(s) which may include multiple markers to delineate the approach as well as the parapet/rail end.

The term "feasible" as used in this section relates to the purpose of Bridge Only projects which is to improve and eliminate structurally deficient and fracture critical bridges and not for the correction of substandard approach roadway geometrics unless there is evidence of existing site specific safety problems at the project site. "Feasibility" involves evaluating existing conditions including the limitations of shoulder approaches, roadway geometry, available right-of-way, field entrances, etc. in relation to site specific crash history, design/operating speed, ADT, etc.

NO EXISTING GUARDRAIL AT LOCATION – PROJECT LIMITS:

Establishing project limits:

For parapet/railing, deck, superstructure or bridge replacement, the project limit on each side of the bridge (established independently of the other) shall extend to the maximum of:

1. Where the structure width increases, the start of the pavement widening (L or 0.5L).
2. Where there is a horizontal and/or vertical geometric change, the point at which the proposed alignment ties back into the existing alignment.
3. Where warranted (e.g., site specific crash history) and outside of the available VDOT prescriptive right-of-way, the point at which the parapet/rail can be properly terminated in accordance with VDOT *Road and Bridge Standards* where applicable.
4. End of impact attenuator where applicable.
5. End of parapet/rail.

MISCELLANEOUS GUARDRAIL/TERMINATION INFORMATION:

All bridge parapet/rails are considered fixed and hazardous objects within the clear zone. Each parapet/rail end shall be evaluated independently (i.e., termination details at bridge corners may vary based on existing roadway approaches, additional hazards, site specific safety history, etc.). The need for guardrail or terminals for the bridge parapet/rail should be established at the scoping stage of the Project.

Use of GR-2 Standard:

Where GR-2 is used with < 12" clearance to the existing/modified slope break location, 8'-0" posts are required. Note that the longer posts are a separate pay item. Driving post past the slope break is prohibited. The regional Traffic Engineering Division project representative and/or Standards/Special Design Section of the Location and Design Division will determine where using longer posts is appropriate in accordance with VDOT *Road and Bridge Standards*.

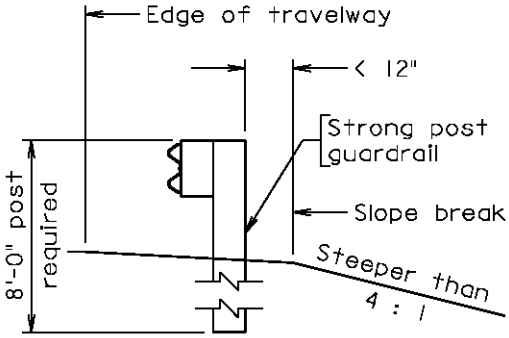

Use of object markers to delineate parapet/rail end:

The Traffic Engineering Division project representative and/or Standards/Special Design Section of the Location and Design Division will determine where using object markers to delineate a bridge parapet/rail end is appropriate. Considerations include ADT, design speed, operating speed and evidence of existing site specific safety problems related to the width and delineated ends of the existing bridge (where applicable). Each location is evaluated on a case by case basis. Object markers are typically only used when other methods of guardrail termination are not feasible or would not reduce the severity of a crash with reasons documented in the project file.

Radial end treatments verses radial guardrail:

Radial end treatments should not be used as they do not reduce the severity of a crash (e.g., between a bridge parapet/rail and a private entrance). Radial guardrail connecting to a properly terminated or continuous run can reduce the severity of a crash.

Radial guardrail that connects two railing systems around an intersection can be used to close a gap between the two systems that is hazardous. The area within the anticipated dynamic deflection of the guardrail shall be free of fixed objects with a ground slope no steeper than 2 : 1.

See **Example 5** on File No. 06.08-11.

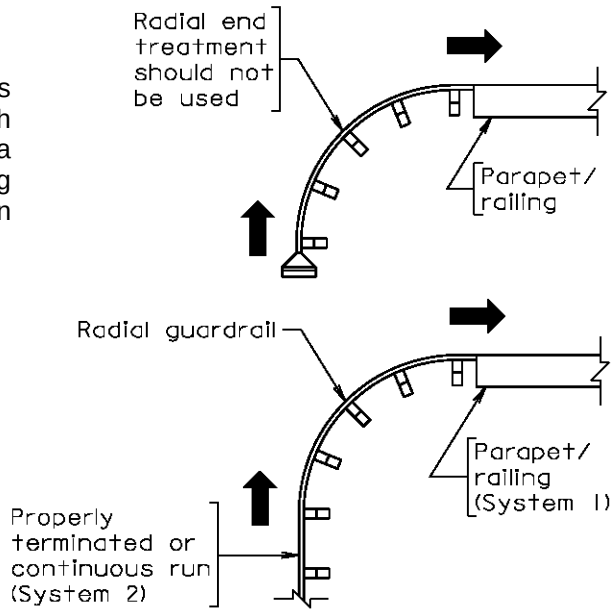

PROJECT LIMITS AND PARAPET/RAIL TERMINATION EXAMPLES:

Example 1: Bridge Only project comprised of bridge replacement without widening
Design speed = 45 mph and bridge shoulder width = 3 feet
Existing guardrail at location with run length = 200 feet
No horizontal or vertical geometric changes

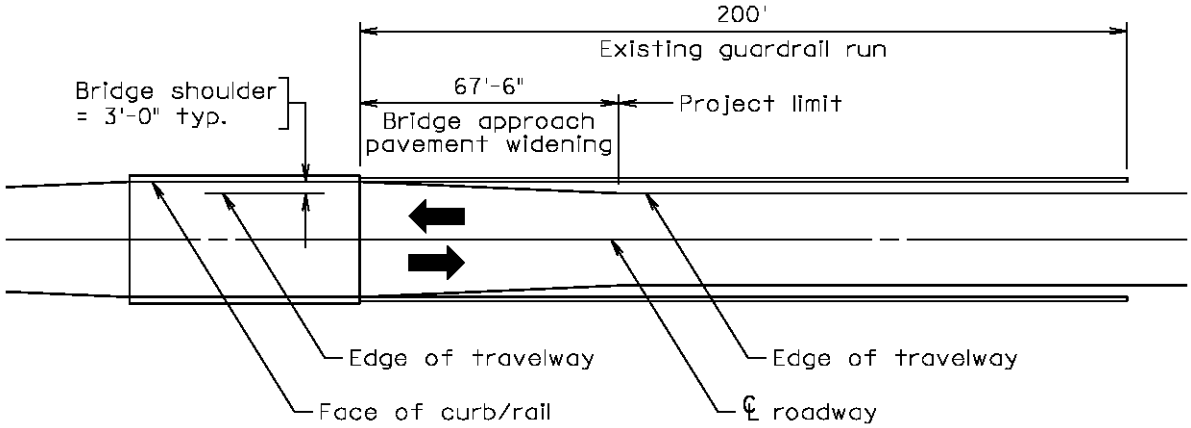

For design speed ≥ 45 mph: L = Length of bridge approach pavement widening
= W x S = 3 x 45 = 135 feet

For Bridge Only project with no geometric changes: Use 0.5L = 0.5 x 135' = 67.5 feet

Since 67.5 feet is 34% of existing run length (100 x 67.5'/200'), the requirement is only to upgrade guardrail within the project limits. Consideration may be given to updating the entire length.

Example 2: Same as Example 1, but **with** vertical geometric change.

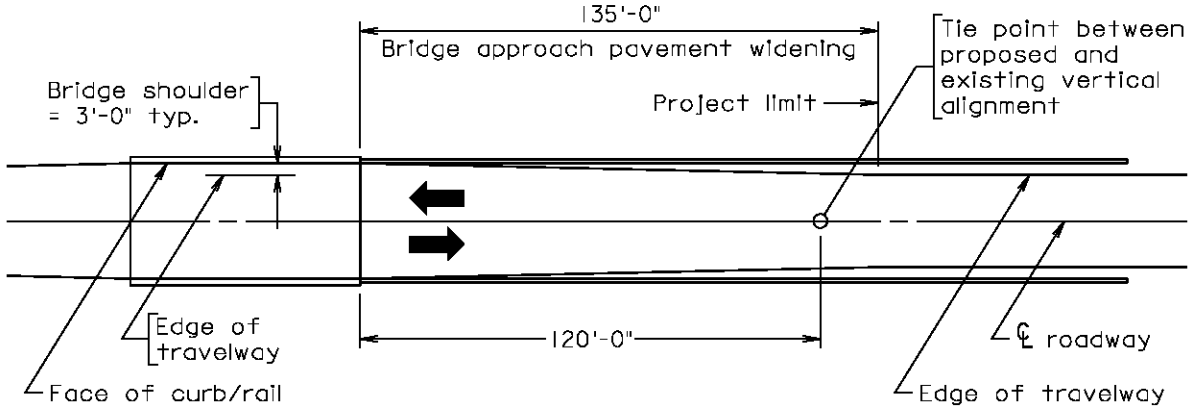

For design speed ≥ 45 mph: L = Length of bridge approach pavement widening
= W x S = 3 x 45 = 135 feet

For Bridge Only project with geometric changes: Use L = 135 feet

Since 135 feet is 68% of existing run length (100 x 135'/200'), the requirement is to upgrade guardrail the entire length of run. However, set project limit at end of bridge approach widening.

PROJECT LIMITS AND PARAPET/RAIL TERMINATION EXAMPLES:

Example 3: Same as Example 1, but replacement bridge width increases and existing guardrail run length = 325'.

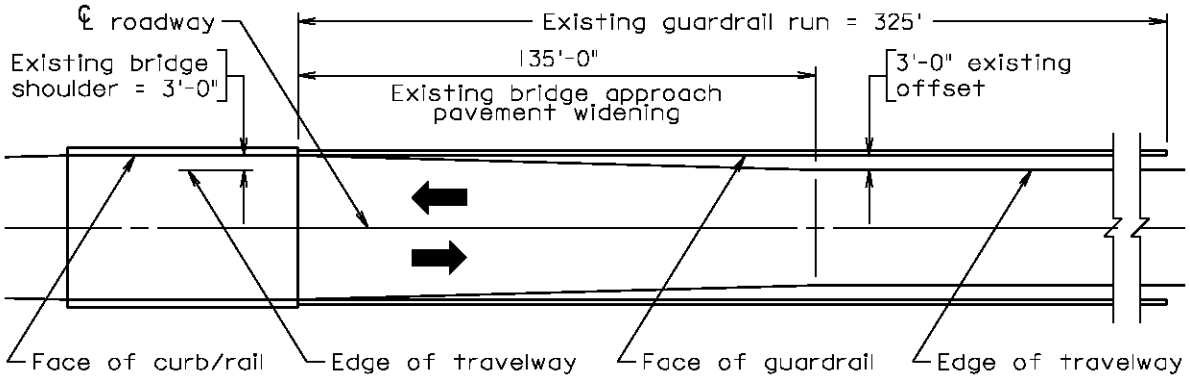

EXISTING STRUCTURE

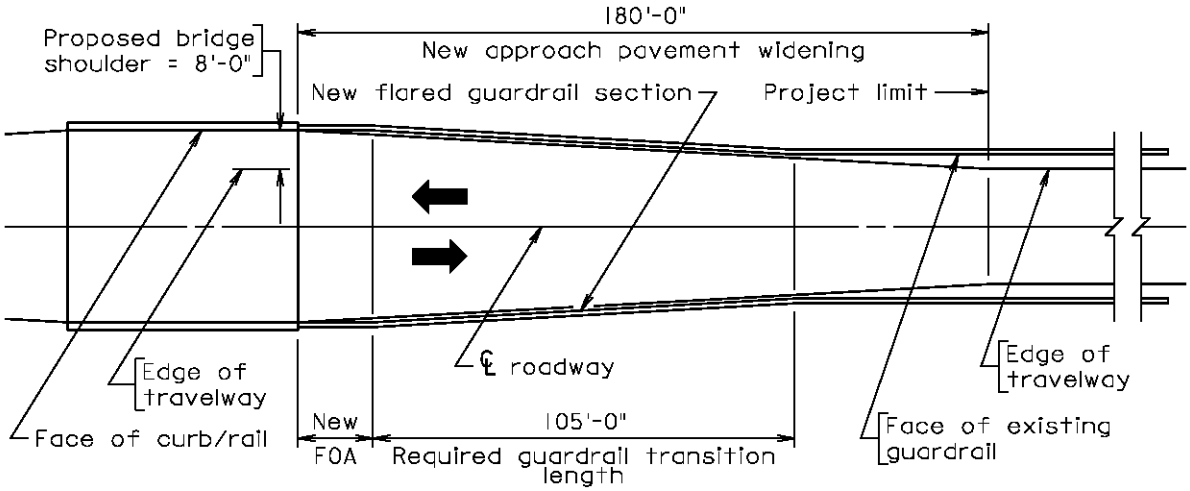

REPLACEMENT STRUCTURE

For design speed (S) $\geq$ 45 mph and W = Shoulder width = 8 feet:

L = Length of bridge approach pavement widening = W x S = 8' x 45 = 360 feet

For Bridge Only project with no geometric changes: Use 0.5L = 0.5 x 360' = 180 feet

The Fixed Object Attachment (FOA) runs parallel to the bridge parapet/rail. From VDOT Road Design Manual, Appendix A, Section A-3, Table A-3-3, a 21:1 flare rate is required for design speed = 50 mph inside the shy line.

Based on the flare rate, the minimum guardrail transition length, TL_{min} = 21 x W = 21 x 5' = 105'.

FOA + TL_{min} = 19.5' + 105' = 124.5' < 0.5L = new approach pavement widening = 180'
Therefore, extend the project limit to the end of the pavement widening.

Since 180' is 55% of existing run length (100 x 180'/325'), the requirement is only to upgrade guardrail within the project limits. However, consideration should be given to upgrading the entire length to eliminate the flared guardrail transition placing the entire run at the wider offset.

PROJECT LIMITS AND PARAPET/RAIL TERMINATION EXAMPLES:

Example 4: Bridge Only project comprised of bridge replacement, **with** site specific safety problems on record, no existing guardrail at location, **can** terminate the bridge parapet/rail in accordance with VDOT *Road and Bridge Standards* for Corners 1 and 2 (cannot for Corners 3 and 4). For Corners 3 and 4, the Traffic Engineering Division project representative and/or Standards/Special Design Section of the Location and Design Division provided recommendations.

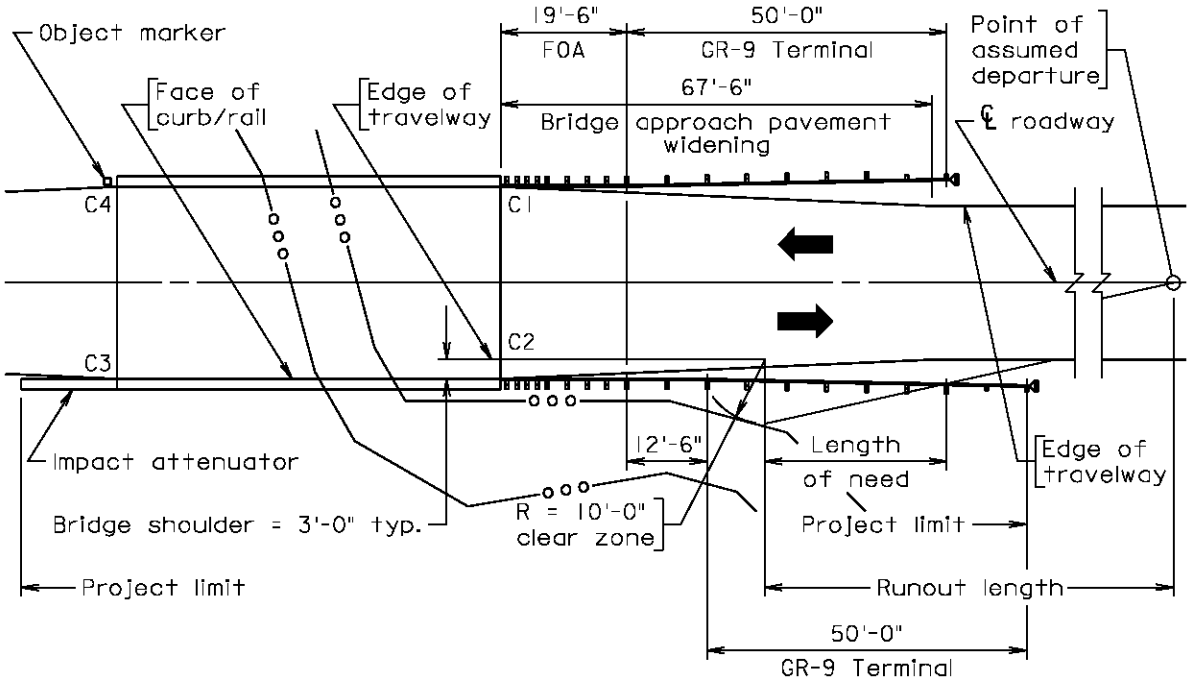

Corner 1 (C1): Bridge parapet/rail should be terminated in accordance with the standards where feasible (except as noted on File No. 06.08-5). Properly terminate the bridge parapet/rail.

Corner 2 (C2): Bridge parapet/rail should be terminated in accordance with the standards where feasible (except as noted on File No. 06.08-5). Additional Length of Need is required to protect against the vertical drop at the stream edge as the minimum clear zone for this roadway is 10 feet. Properly terminate the bridge parapet/rail. See VDOT *Road Design Manual*, Appendix A, Section A-3 and VDOT *Road and Bridge Standards* for determining the location of the end of guardrail for the Length of Need required.

Corner 3 (C3): Upon review, it was determined that minor modifications to the existing roadway typical section would not be sufficient to terminate the bridge parapet/rail in accordance with the standards, i.e. major roadway reconstruction would be required or simply infeasible. With site specific safety problems on record, protect the bridge end with an impact attenuator.

Corner 4 (C4): Upon review, it was determined that minor modifications to the existing roadway typical section would not be sufficient to terminate the bridge parapet/rail in accordance with the standards, i.e. major roadway reconstruction would be required or simply infeasible, nor sufficient to install an impact attenuator. Delineate the bridge parapet/rail end with an object marker with reasons documented in the project file.

PROJECT LIMITS AND PARAPET/RAIL TERMINATION EXAMPLES:

Example 5: Bridge Only project comprised of bridge replacement, **cannot** terminate the bridge parapet/rail in accordance with VDOT *Road and Bridge Standards* at any corner.

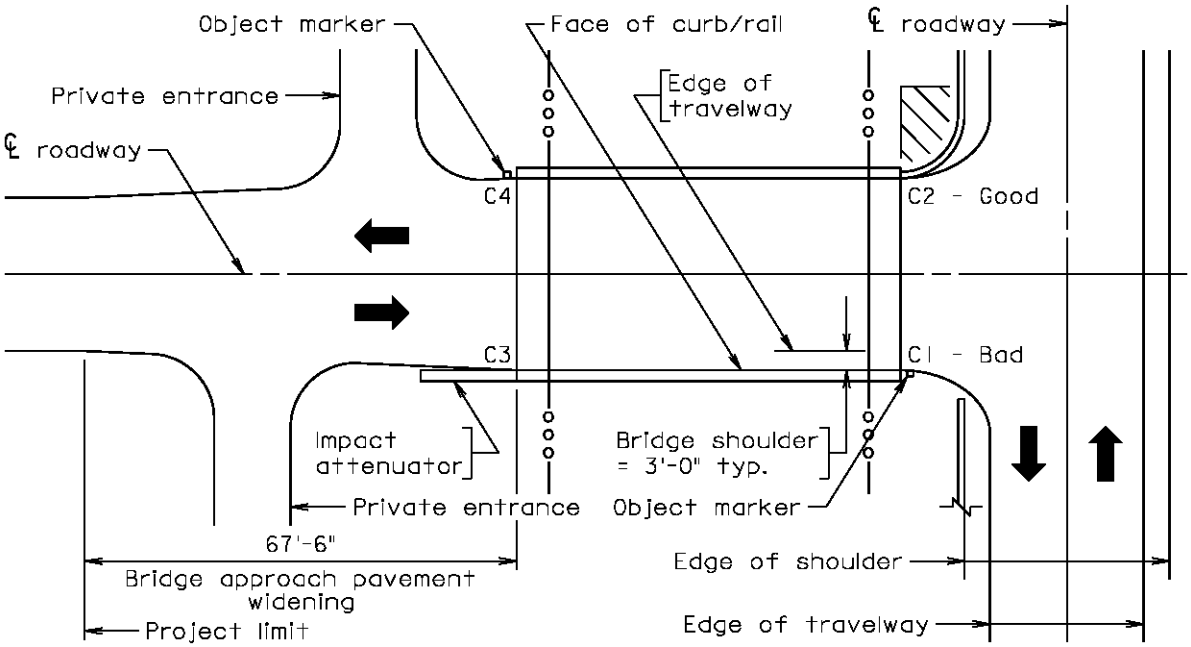

With no means to terminate any of the bridge parapet/rail ends in accordance with VDOT *Road and Bridge Standards*, the Traffic Engineering Division project representative and/or Standards/ Special Design Section of the Location and Design Division provided recommendations.

Corner 1 (C1 – Bad) (i.e., not acceptable): When there is a need for guardrail adjacent to the roadway, traffic should not be fully exposed to the hazard by leaving a gap between it and the bridge parapet/rail. Radial guardrail should be used to connect the guardrail adjacent to the roadway to the bridge parapet/rail as illustrated in "C2 - Good."

Corner 2 (C2 – Good): When there is a need for guardrail adjacent to the roadway, radial guardrail should be used to connect the guardrail adjacent to the roadway to the bridge parapet/rail. The area within the anticipated dynamic deflection of the guardrail (hatched area) shall be free of fixed objects with a slope no steeper than 2 : 1 as discussed in File No. 06.08-7.

Corner 3 (C3): Sufficient room to terminate the bridge parapet/rail is not available due to the private entrance. However, sufficient room is available for an impact attenuator.

Corner 4 (C4): Sufficient room to terminate the bridge parapet/rail is not available due to the private entrance. There is insufficient room for an impact attenuator. Relocating the private entrance should be considered. If moving the private entrance is not feasible and there are no additional hazards other than the bridge railing, delineate the bridge parapet/rail end with an object marker with reasons documented in the project file.