STATE	FEDERAL AID ROUTE	FEDERAL AID PROJECT	STATE ROUTE	STATE PROJECT	SHEET NO.
VA.	—				

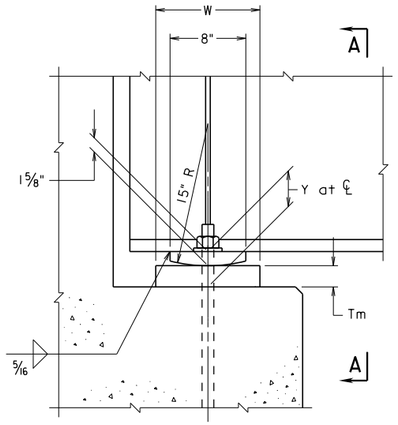

FIXED BEARING
ABUTMENT ELEVATION

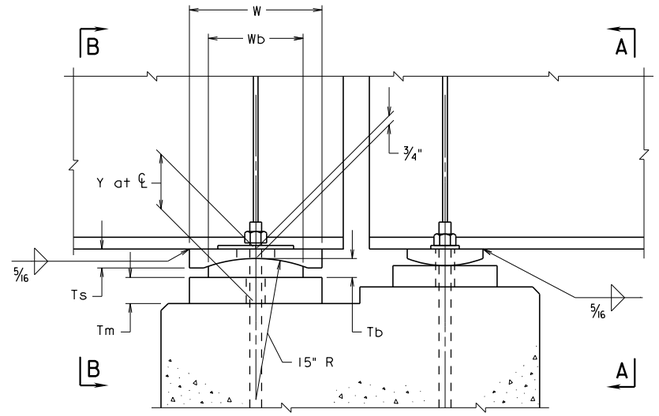

EXPANSION BEARING FIXED BEARING
PIER ELEVATION

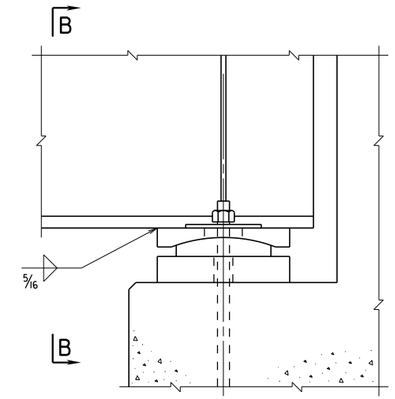

EXPANSION BEARING
ABUTMENT ELEVATION

Notes:

The nuts on the fixed bearings shall be snug tightened.

Fill slots and holes in masonry plate around anchor bolts with a non-hardening caulking compound or elastic joint sealer.

For expansion bearing, bevel sole plate to match grade if grade exceeds 1%. For fixed bearing, bevel sole plate if grade exceeds 3%.

Bearing stiffeners shown are omitted if rolled beam is used.

Radius may be machined to compensate for grade.

Bearing shall be set so that at 60°F it is at the midpoint of its movement.

For expansion bearings, 15" radius tolerances: Sole PL - 0", + .01"
Bronze PL - .01", + 0"

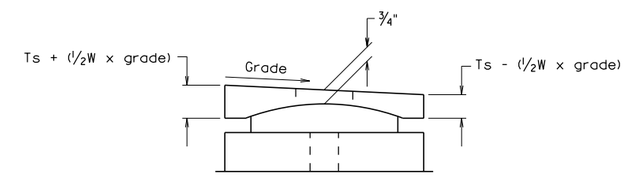

PART DETAIL OF
EXPANSION BEARING
Showing beveled sole plate

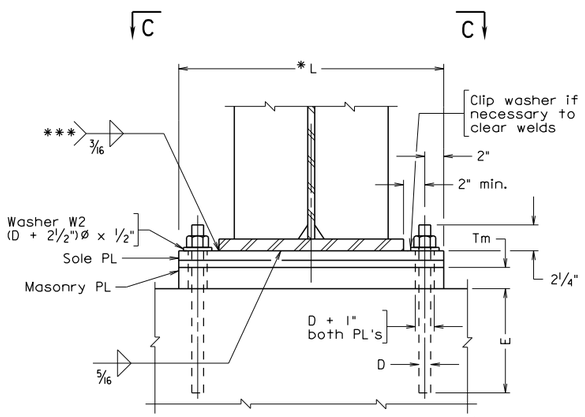

SECTION A-A

* Min. = flange width + 8" or calculated L whichever is greater.

*** Weld shall terminate 1/4" from edge of bearing plate.

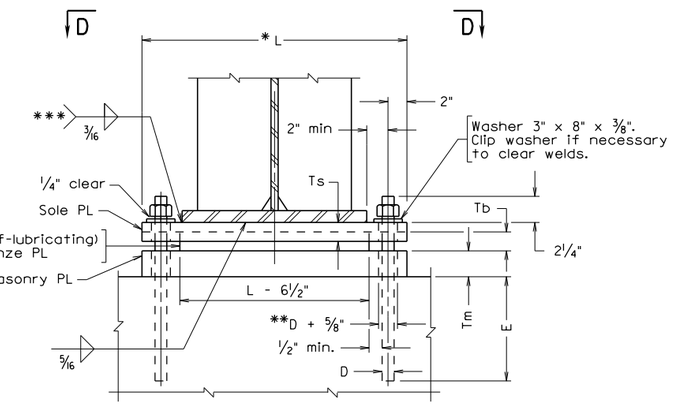

SECTION B-B

**Masonry PL only

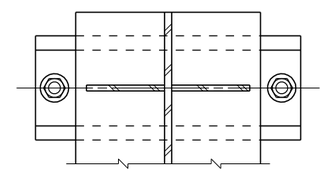

SECTION C-C

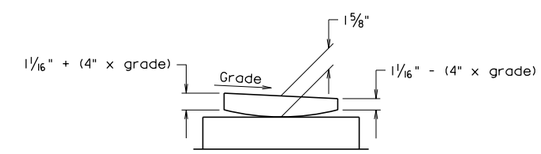

PART DETAIL OF
FIXED BEARING
Showing beveled sole plate

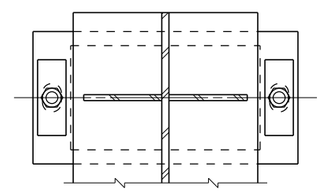

SECTION D-D

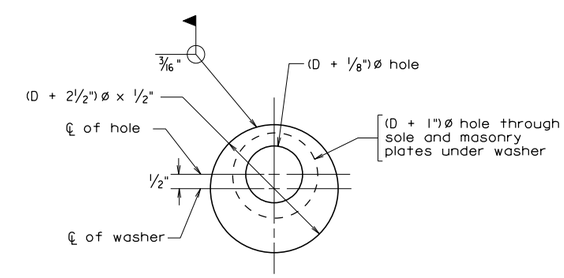

WASHER W2

DESIGNATION TABLE

Span	Abut.	Pier	Type	L	W	Wb	Ts	Tb	D	E	Sole plate slots	Y	Tm	% Grade	Δ	Fh	Reaction (kips)

Slotted holes in sole plate may be drilled or machine burned.
Dimensions Ts, Tb and Y are measured at ℄ of bearing.
All dimensions in table are in inches.

Not to scale

© 2015, Commonwealth of Virginia

bbd-4.dgn

10-15-2015

Sealed and Signed by:
Prasad L. Nallapaneni
Lic. No. 033003
On the date of
October 15, 2015

A copy of the original sealed and signed standard drawing is on file in the Central Office.

VDOT S&B DIVISION
RICHMOND, VA
STRUCTURAL ENGINEER

BBD-4

No.	Description	Date

Revisions

COMMONWEALTH OF VIRGINIA
DEPARTMENT OF TRANSPORTATION

STRUCTURE AND BRIDGE DIVISION

BEARING DETAILS

Designed: S&B DIV
Drawn: S&B DIV
Checked: S&B DIV

Date

Plan No. BBD-4

Sheet No.

BEARING DETAILS

LOW PROFILE BEARINGS
FOR STEEL BEAMS OR GIRDERS

NOTES TO DESIGNER:

Standard is for use with steel beams or girders.

Set fixed bearing assemblies at low end of spans where practical.

Include weight of bearing assemblies in structural steel quantities.

On vertical curves with skewed substructures, bearings may be grouped together by average Grade % as long as the grade does not vary by more than 0.25% in any group. The grade is the grade of the chord between the bearings at opposite ends of a beam.

ADD THE FOLLOWING NOTES, DIMENSIONS, DETAILS, ETC. TO STANDARD:

DESIGNATION TABLE:

Complete designation table with data as applicable: Span (designation), Abutment (A or B normally), Pier (designation), Type (Fixed or Exp.), and
"L" is length of sole plate and masonry plate. Use greater of flange width + 8" and calculated "L".
"W" is width of masonry plate for fixed bearing or width of sole plate and masonry plate for expansion bearing.
"Wb" is width of bronze plate.
"Ts" is thickness of sole plate.
"Tb" is thickness of bronze plate on centerline bearing.
"D" is diameter of anchor bolt.
"E" is embedment of anchor bolt.
"Sole Plate Slots" is dimension of slot in sole plate for expansion bearing.
"Y" is total height of bearing at centerline bearing.
"Tm" is thickness of masonry plate.
"Grade" is % of grade at centerline bearing.
"Δ" is longitudinal movement of superstructure at centerline bearing.
"Fh" is horizontal reaction for applicable Service Limit State.
"Reaction" is vertical reaction for applicable Service Limit State.

Minimum thickness of sole plate and masonry plate is $^{3}/_{4}$".