STATE	FEDERAL AID ROUTE	FEDERAL AID PROJECT	STATE ROUTE	STATE PROJECT	SHEET NO.
VA.	—				

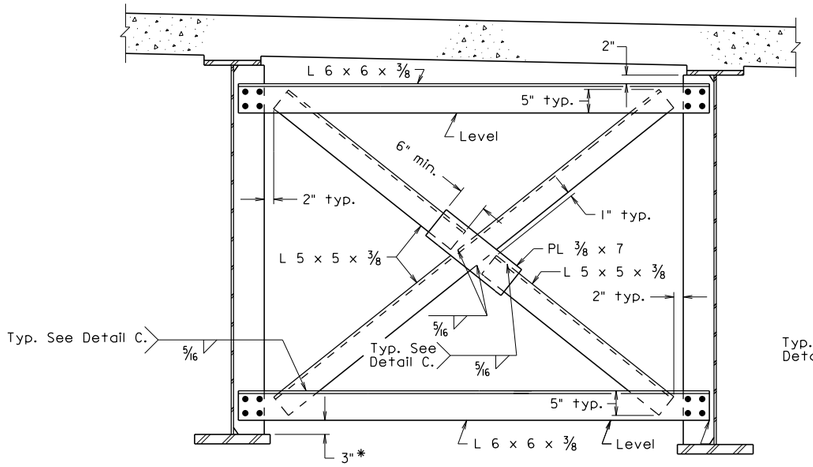

CROSS FRAME - CF5

* Dimension shall be 6" at piers

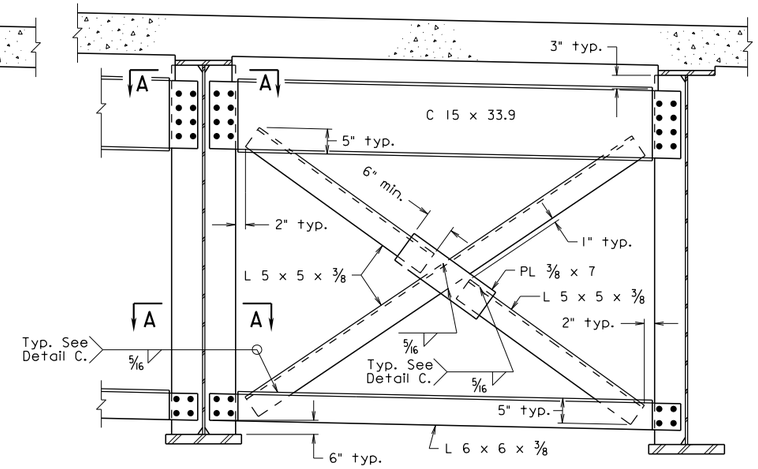

CROSS FRAME - CF7

Note:

All welding of structural steel and quality control inspection of welds, including field welding and quality control inspection of field welding, shall be the responsibility of the Contractor in accordance with Section 407.04(l) of the Specifications.

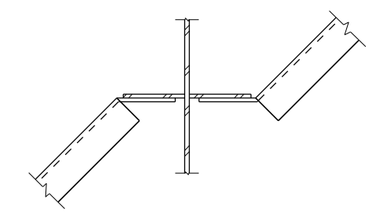

SECTION A-A

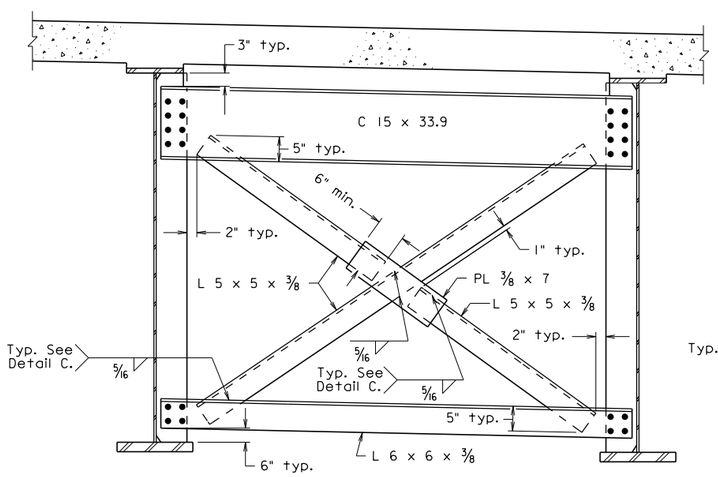

CROSS FRAME - CF6

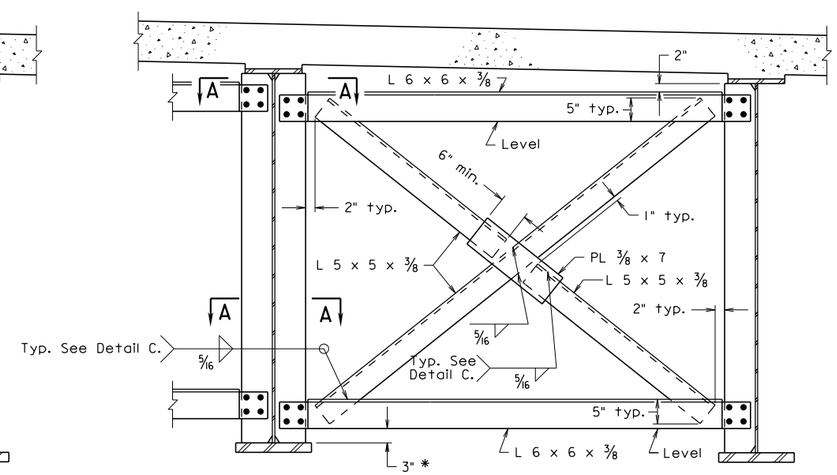

CROSS FRAME - CF8

* Dimension shall be 6" at piers

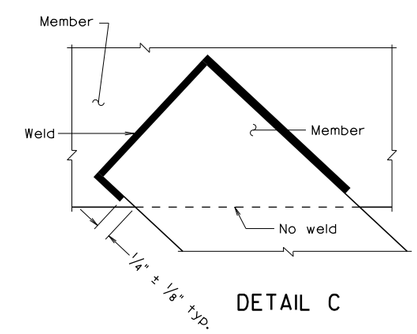

DETAIL C

bcf5.dgn

03-27-2013

BCF-5

Sealed and Signed by:
Julius F.J. Volgyi Jr.
Lic. No. 010487
On the date of
March 27, 2013

A copy of the original sealed and signed standard drawing is on file in the Central Office.

VDOT S&B DIVISION
RICHMOND, VA
STRUCTURAL ENGINEER

Not to scale

©2013, Commonwealth of Virginia

No.	Description	Date
	Revisions	

COMMONWEALTH OF VIRGINIA
DEPARTMENT OF TRANSPORTATION

STRUCTURE AND BRIDGE DIVISION

CROSS FRAME DETAILS

Designed: S&B DIV
Drawn: S&B DIV
Checked: S&B DIV

Date

Plan No. BCF-5

Sheet No.

NOTES TO DESIGNER:

For use of standard cross frames (diaphragms), see Manual of the Structure and Bridge Division, Volume V, Part 2, Chapter 11. Use V-cross frames up to a maximum angle of 60°.

Indicate on framing plan which type(s) are used, e.g., Typical Cross Frame CF2 at (near) Abutments, or Typical Intermediate Cross Frame CF1.

Cross Frames detailed on standard are as follows:

CF5: X-Type, Intermediate Diaphragm, Normal (0° Skew), Used also at piers for continuous girders.

CF6: X-Type, End Diaphragm, Normal (0° Skew)

CF7: X-Type, End Diaphragm, Skewed.

CF8: X-Type, Intermediate Diaphragm, Skewed. Used at piers for continuous girders.

ADD THE FOLLOWING NOTES, DIMENSIONS, DETAILS, ETC. TO STANDARD:

None