STATE	FEDERAL AID ROUTE	FEDERAL AID PROJECT	STATE ROUTE	STATE PROJECT	SHEET NO.
VA.	—				

PART PLAN

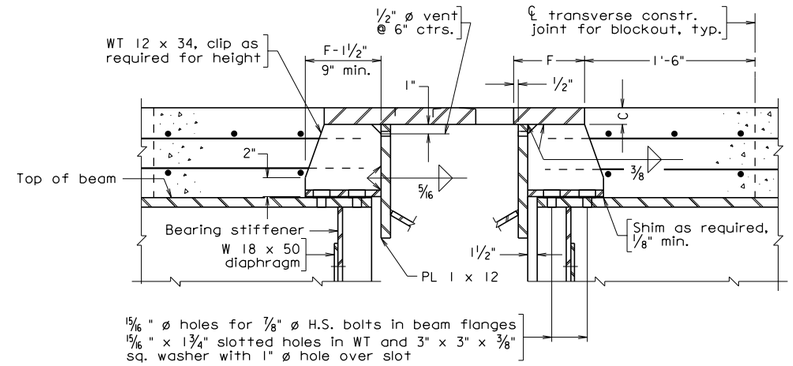

PART SECTION AT STEEL GIRDER

Notes:

Structural steel shall be ASTM A36 and shall be fabricated in accordance with Section 407 and painted in accordance with Section 411 of the Specifications.

Bolts, nuts and washers in trough shall be ASTM A276, Type 304 stainless steel.

Flathead screws shall be ASTM F738, Type 304 stainless steel.

Elastomeric material for troughs shall be 50 durometer, nonwicking synthetic fabric reinforced, ¼" thick sheets, in accordance with Section 212.02(j) of the Specifications. Fabric shall be woven non-wicking polyester. Width of sheets equal 2 times the tooth length (L) + 6".

Unit shall be shipped to the job site preassembled for lengths up to forty feet. One field welded splice is permissible for each additional forty feet.

Tooth plates shall be flame cut from one plate by a single cut of a machine guided torch. Sharp corners are to be removed by grinding. Width of cut shall be ¼". Width of plate required equals $2F + 2 + (A + B - 1.75)\cos\theta$.

Joint shall be fabricated to follow the grade and the transverse contour of the roadway.

To assure that all bedding areas and recesses of the structural elements are completely filled with well compacted concrete, adequate venting, vibrating and hand packing of concrete into these areas shall be done.

Anchor bolts shall be cast in place.

Temporary L's 4 x 3 x ½ at maximum 5'-0" centers shall be shop welded. After erection and adjustment, bolts shall be tightened. After concrete has been set, angles shall be removed by chipping connection welds and grinding surfaces smooth.

Set joint and place blockout concrete after all deck slabs in spans that affect the joint have been placed. Before placing blockout concrete, apply epoxy bonding agent to transverse construction joint.

For details of tooth expansion joint, see standard(s) BEJ-8 and BEJ-9, sheet and .

Abut.	Pier	Tooth Length L	C	D	E	F	G	Skew Angle θ	Trough Type

PART SECTION

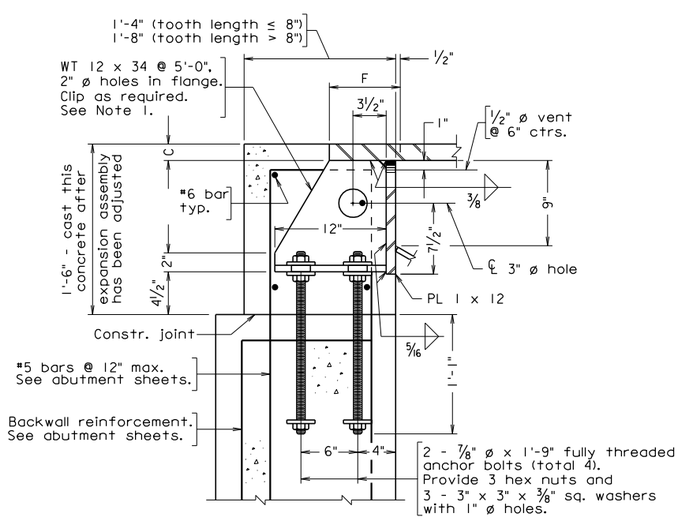

PART SECTION AT ABUTMENT

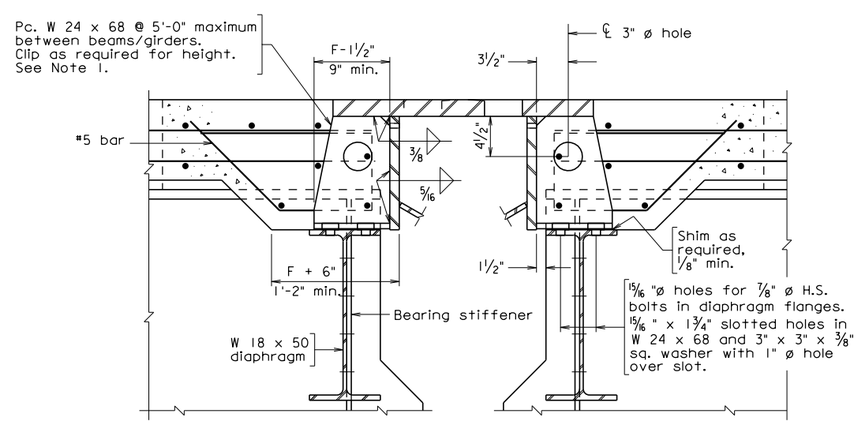

PART SECTION AT STEEL DIAPHRAGM

" Tooth length Temperature adjustments			" Tooth length Temperature adjustments		
Temp.	A	B	Temp.	A	B
120°F			120°F		
100°F			100°F		
80°F			80°F		
60°F			60°F		
40°F			40°F		
20°F			20°F		
0°F			0°F		

Make linear interpolation for temperatures between those in table.

Note 1: Use intermediate anchors at 12" max. spacing between WT's.

Not to scale

©2016, Commonwealth of Virginia

bej6.dgn

05-18-2016

BEJ-6

Sealed and Signed by:
Prasad L. Nallapaneni
Lic. No. 033003
On the date of
May 18, 2016

A copy of the original sealed and signed standard drawing is on file in the Central Office.

VDOT S&B DIVISION
RICHMOND, VA
STRUCTURAL ENGINEER

No.	Description	Date
	Revisions	

COMMONWEALTH OF VIRGINIA
DEPARTMENT OF TRANSPORTATION

STRUCTURE AND BRIDGE DIVISION

TOOTH EXPANSION JOINT

Designed: .....
Drawn: S&B Div
Checked: .....

Date	Plan No.	Sheet No.
	BEJ-6	

STATE	FEDERAL AID ROUTE	FEDERAL AID PROJECT	STATE ROUTE	STATE PROJECT	SHEET NO.
VA.	—				

PART PLAN

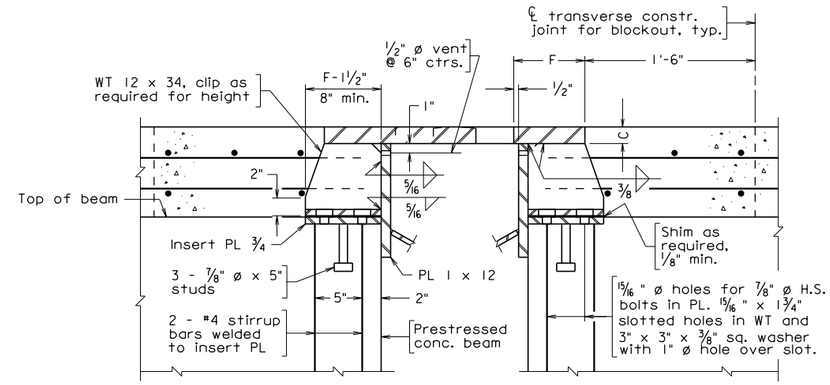

PART SECTION AT CONCRETE BEAM

PART SECTION

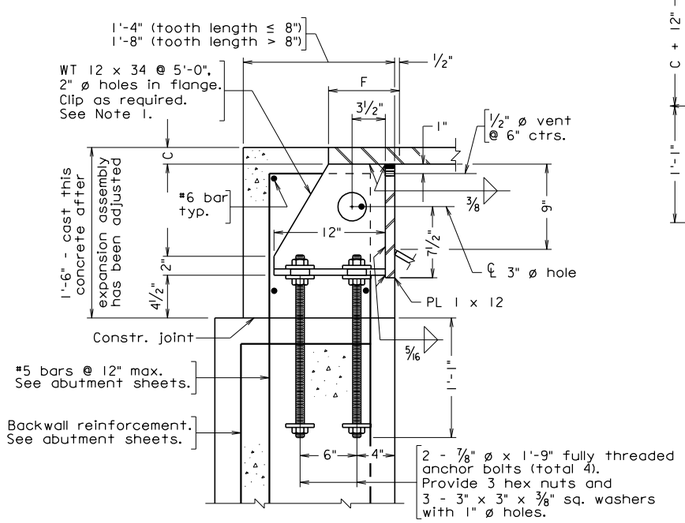

PART SECTION AT ABUTMENT

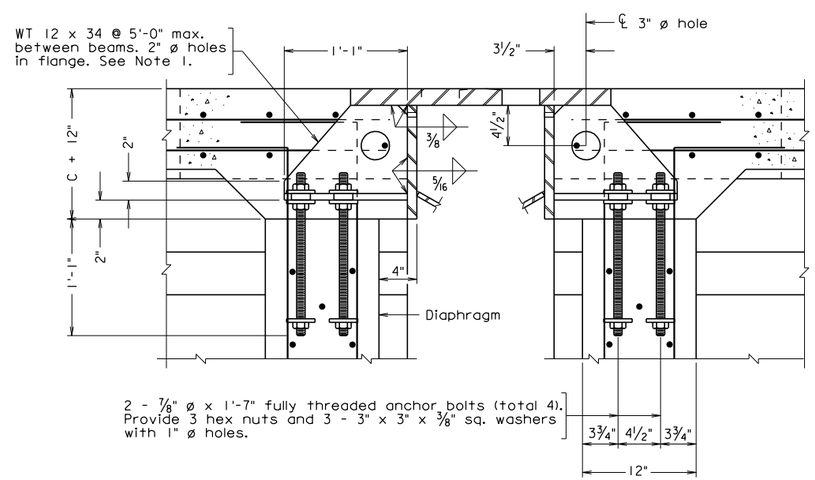

PART SECTION AT CONCRETE DIAPHRAGM

Notes:

Structural steel shall be ASTM A36 and shall be fabricated in accordance with Section 407 and painted in accordance with Section 411 of the Specifications.

Bolts, nuts and washers in trough shall be ASTM A276, Type 304 stainless steel.

Flathead screws shall be ASTM F738, Type 304 stainless steel.

Elastomeric material for troughs shall be 50 durometer, nonwicking synthetic fabric reinforced, 1/4" thick sheets, in accordance with Section 212.02(j) of the Specifications. Fabric shall be woven non-wicking polyester. Width of sheets equal 2 times the tooth length (L) + 6".

Unit shall be shipped to the job site preassembled for lengths up to forty feet. One field welded splice is permissible for each additional forty feet.

Tooth plates shall be flame cut from one plate by a single cut of a machine guided torch. Sharp corners are to be removed by grinding. Width of cut shall be 1/4". Width of plate required equals $2F + 2 + (A + B - 1.75)\cos\theta$.

Joint shall be fabricated to follow the grade and the transverse contour of the roadway.

To assure that all bedding areas and recesses of the structural elements are completely filled with well compacted concrete, adequate venting, vibrating and hand packing of concrete into these areas shall be done.

Anchor bolts shall be cast in place.

Temporary L's 4 x 3 x 1/2 at maximum 5'-0" centers shall be shop welded. After erection and adjustment, bolts shall be tightened. After concrete has been set, angles shall be removed by chipping connection welds and grinding surfaces smooth.

Set joint and place blockout concrete after all deck slabs in spans that affect the joint have been placed. Before placing blockout concrete, apply epoxy bonding agent to transverse construction joint.

For details of tooth expansion joint, see standard(s) BEJ-8 and BEJ-9, sheet and .

Abut.	Pier	Tooth Length L	C	D	E	F	G	Skew Angle θ	Trough Type

" Tooth length Temperature adjustments			" Tooth length Temperature adjustments		
Temp.	A	B	Temp.	A	B
120°F			120°F		
100°F			100°F		
80°F			80°F		
60°F			60°F		
40°F			40°F		
20°F			20°F		
0°F			0°F		

Make linear interpolation for temperatures between those in table.

Note 1: Use intermediate anchors at 12" max. spacing between WT's.

Not to scale

©2016, Commonwealth of Virginia

bej7.dgn

05-18-2016

BEJ-7

Sealed and Signed by: Prasad L. Nallapaneni Lic. No. 033003 On the date of May 18, 2016

A copy of the original sealed and signed standard drawing is on file in the Central Office.

VDOT S&B DIVISION RICHMOND, VA STRUCTURAL ENGINEER

No.	Description	Date

Revisions

COMMONWEALTH OF VIRGINIA
DEPARTMENT OF TRANSPORTATION

STRUCTURE AND BRIDGE DIVISION

TOOTH EXPANSION JOINT

Designed: .....
Drawn: S&B DIV
Checked: .....

Date	Plan No.	Sheet No.
	BEJ-7	

STATE	FEDERAL AID ROUTE	FEDERAL AID PROJECT	STATE ROUTE	STATE PROJECT	SHEET NO.
VA.	—				

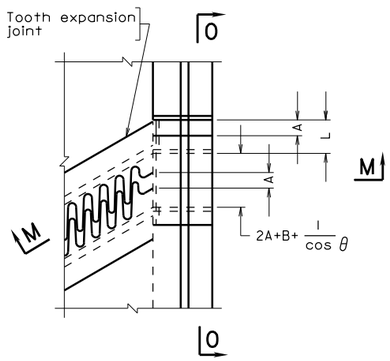

PLAN AT MEDIAN BARRIER

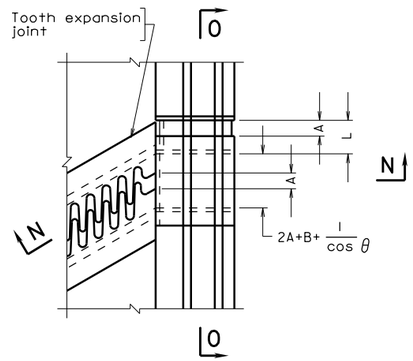

PLAN AT PARAPET

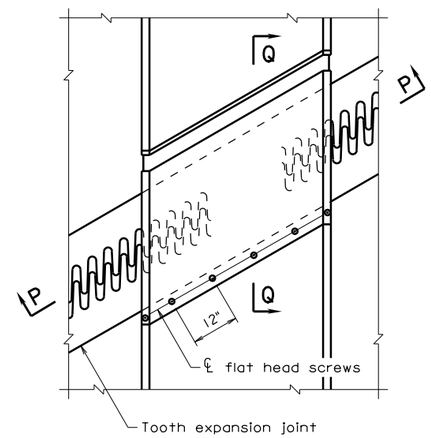

PLAN AT RAISED MEDIAN

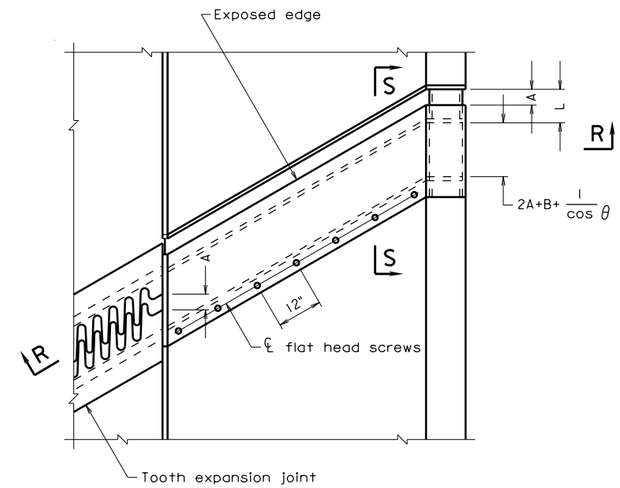

PLAN AT SIDEWALK

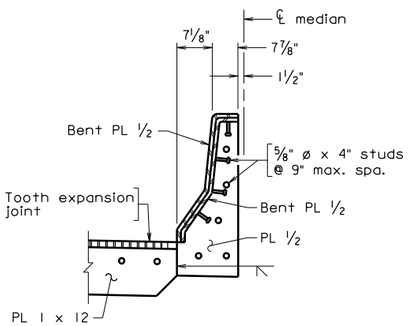

SECTION M-M

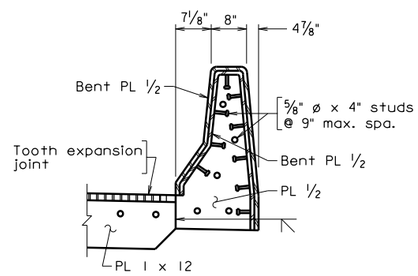

SECTION N-N

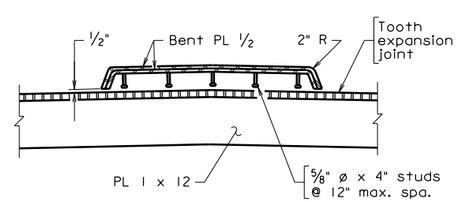

SECTION P-P

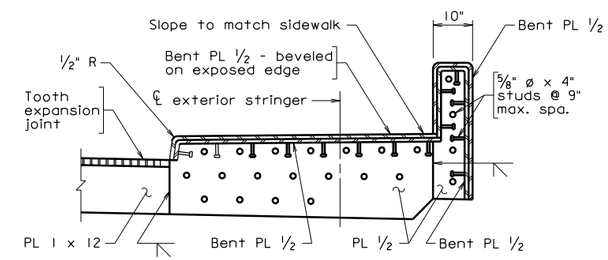

SECTION R-R

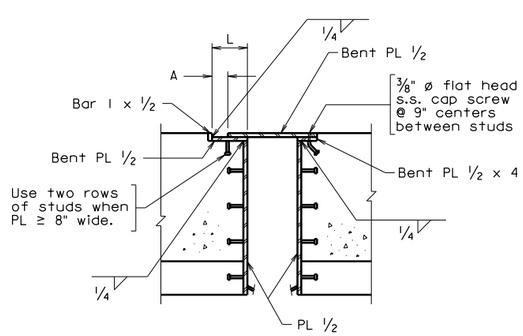

SECTION O-O

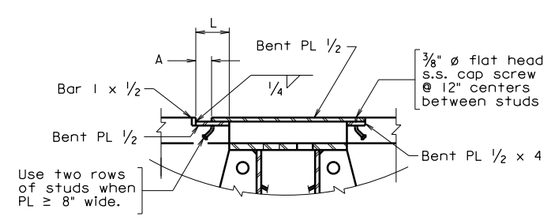

SECTION Q-Q

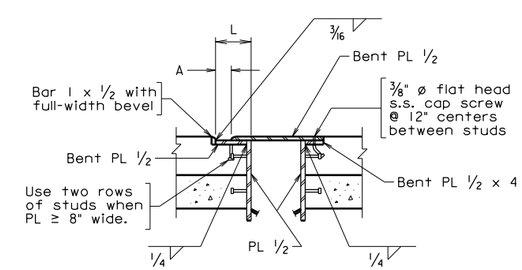

SECTION S-S

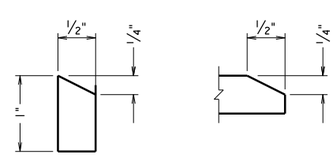

BAR 1 X 12 BENT PL 1/2

BEVEL DETAILS

Not to scale

©2010, Commonwealth of Virginia

No.	Description	Date
	Revisions	

COMMONWEALTH OF VIRGINIA
DEPARTMENT OF TRANSPORTATION

STRUCTURE AND BRIDGE DIVISION

TOOTH EXPANSION JOINT MISCELLANEOUS DETAILS

Designed: S&B DIV
Drawn: S&B DIV
Checked: S&B DIV

Date

Plan No. BEJ-10

Sheet No.

VDOT S&B DIVISION
RICHMOND, VA
STRUCTURAL ENGINEER

BEJ-10 06-14-2010 bej10.dgn

STATE	FEDERAL AID ROUTE	FEDERAL AID PROJECT	STATE ROUTE	STATE PROJECT	SHEET NO.
VA.	—				

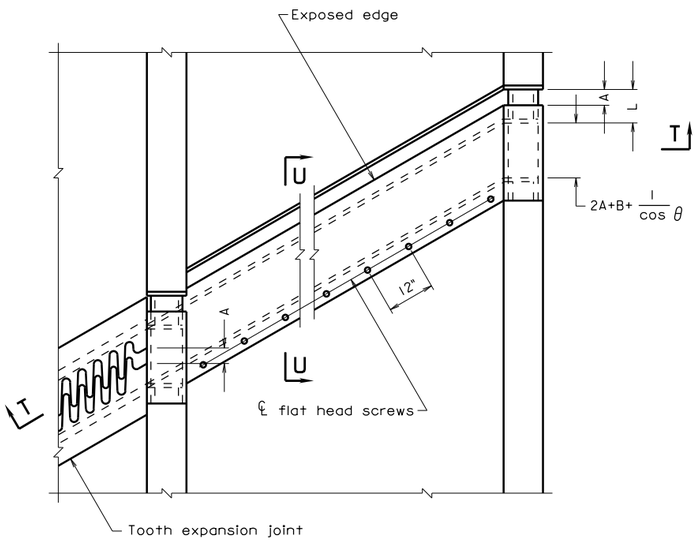

PLAN AT BARRIER SEPARATED PEDESTRIAN AND/OR BICYCLE FACILITY

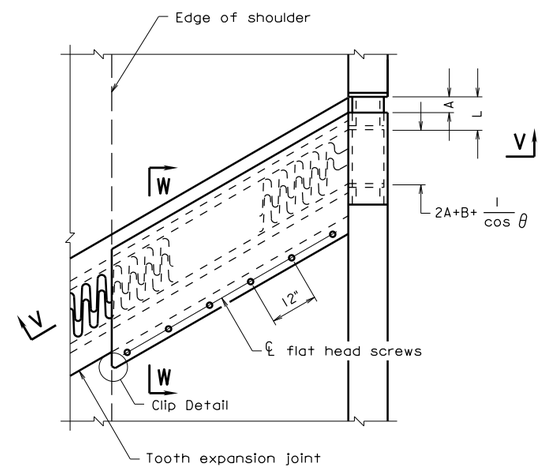

PLAN AT SHOULDER WHERE BICYCLE USE IS ANTICIPATED

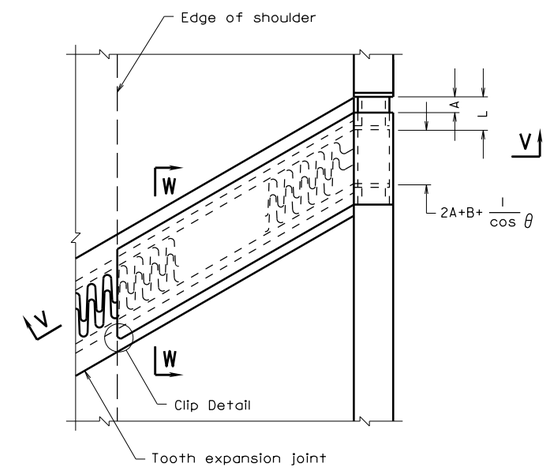

PLAN AT SHOULDER WHERE BICYCLE USE IS ANTICIPATED - ALTERNATE

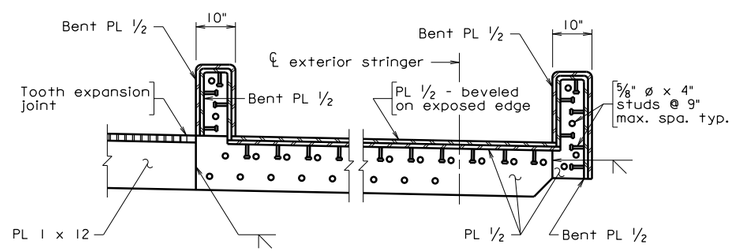

SECTION T-T

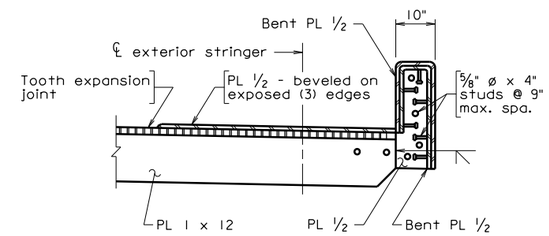

SECTION V-V

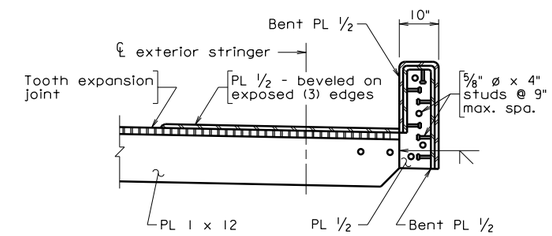

SECTION V-V - ALTERNATE

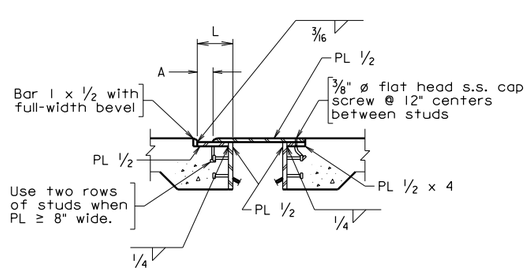

SECTION U-U

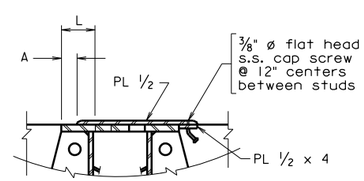

SECTION W-W

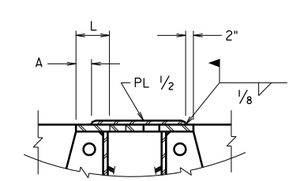

SECTION W-W - ALTERNATE

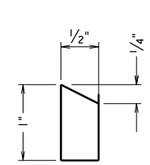

BAR 1 X 12

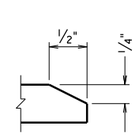

PL 1/2

BEVEL DETAILS

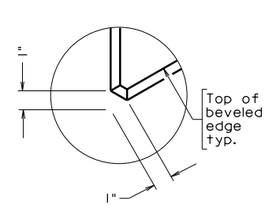

CLIP DETAIL

Not to scale

©2010, Commonwealth of Virginia

No.	Description	Date
	Revisions	

COMMONWEALTH OF VIRGINIA
DEPARTMENT OF TRANSPORTATION

STRUCTURE AND BRIDGE DIVISION

TOOTH EXPANSION JOINT MISCELLANEOUS DETAILS

Designed: S&B DIV
Drawn: S&B DIV
Checked: S&B DIV

Date

Plan No. BEJ-11

Sheet No.

VDOT S&B DIVISION
RICHMOND, VA
STRUCTURAL ENGINEER

06-14-2010

BEJ-11

bej11.dgn

STATE	FEDERAL AID ROUTE	FEDERAL AID PROJECT	STATE ROUTE	STATE PROJECT	SHEET NO.
VA.	—				

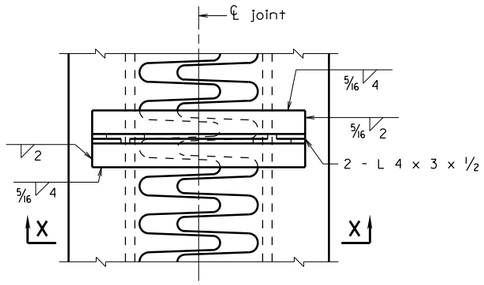

PLAN OF TEMPORARY ATTACHMENT

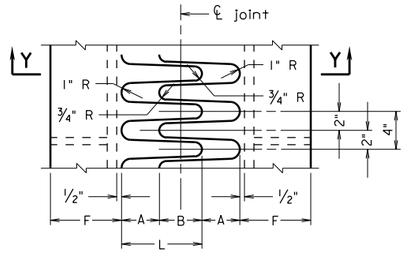

NO SKEW

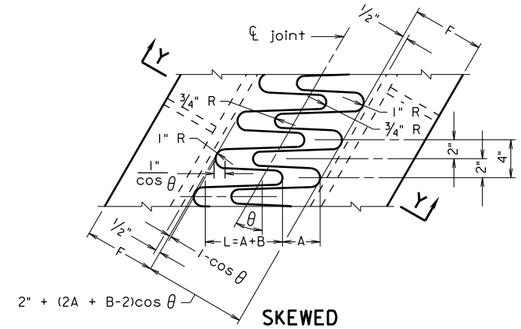

SKEWED

TOOTH PART PLAN

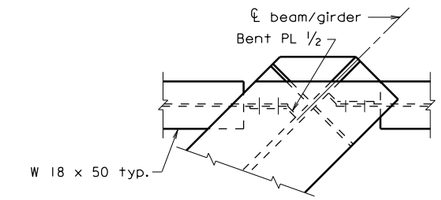

STEEL BEAM/GIRDER SKEWED BEARING STIFFENER DETAIL

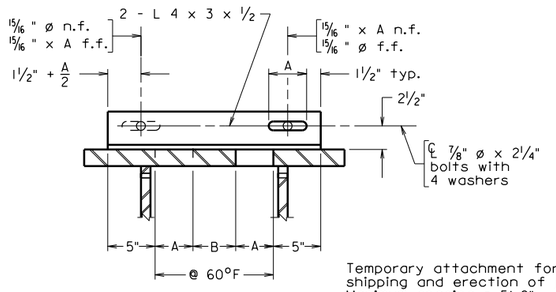

Temporary attachment for shipping and erection of joint. Maximum spacing = 5'-0".

SECTION X-X

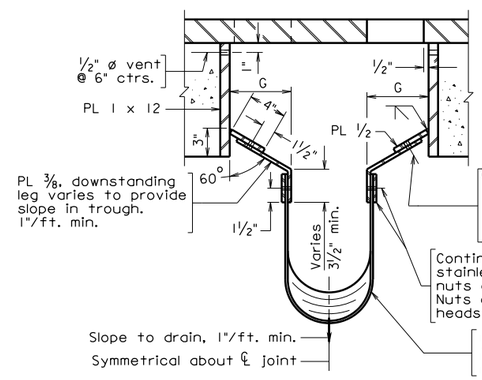

TYPE B

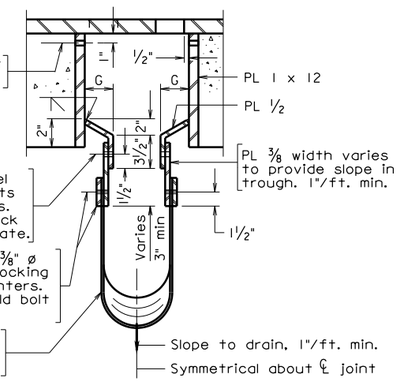

TYPE A

SECTION Y-Y (TROUGH DETAILS)

Note: Extend trough to edge of slab. Trough detail not shown.

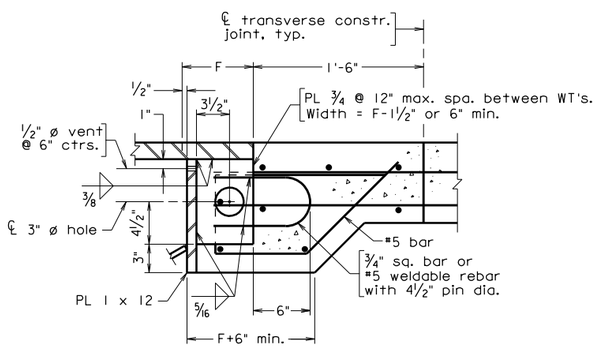

INTERMEDIATE ANCHOR DETAIL

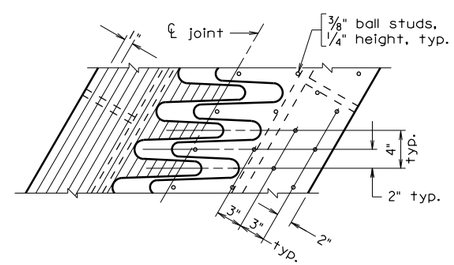

WELD PATTERN STUD PATTERN

SKID RESISTANCE DETAIL

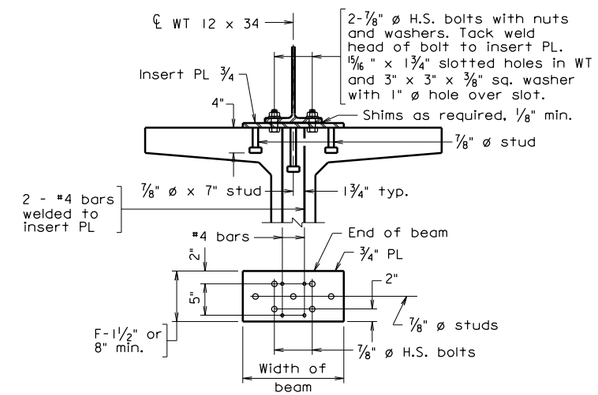

CONCRETE BEAM INSERT PLATE

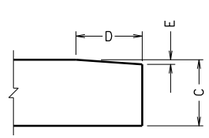

TOOTH BEVEL DETAIL

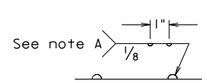

Note A: Use minimum preheat and interpass temperature of 250° F.

Contractor may provide either studs or weld pattern. Do not place on beveled end of tooth.

Not to scale

©2010, Commonwealth of Virginia

No.	Description	Date
	Revisions	

COMMONWEALTH OF VIRGINIA
DEPARTMENT OF TRANSPORTATION

STRUCTURE AND BRIDGE DIVISION

TOOTH EXPANSION JOINT MISCELLANEOUS DETAILS

Designed: S&B DIV
Drawn: S&B DIV
Checked: S&B DIV

Date

Plan No. BEJ-12

Sheet No.

VDOT S&B DIVISION
RICHMOND, VA
STRUCTURAL ENGINEER

BEJ-12 06-14-2010 bej12.dgn

NOTES TO DESIGNER:

The tooth expansion joint standard consists of five standard sheets BEJ-6, BEJ-7, BEJ-10, BEJ-11 and BEJ-12. BEJ-6 is for steel girders and BEJ-7 is for concrete beams. BEJ-10, BEJ-11 and BEJ-12 are miscellaneous details and must be used with standards BEJ-6 and BEJ-7 as applicable.

1. Determine if preformed elastomeric joint sealer (compression sealer) or elastomeric expansion dam (strip seal) can be used. See Part 2, Chapter 14 of this manual and standards BEJ-1, -2 and -3.

2. If compression sealer or strip seal cannot be used, determine the appropriate tooth length based on the total length of movement over which thermal expansion will be occurring. A tooth expansion joint program is available for use by in-house design staff only. See Note 13 for values and formulas used by the program. For the required tooth length, complete the tables on standard sheet BEJ-6 for steel beams/girders and BEJ-7 for concrete beams.

3. All factors which affect movement should be considered in dimensioning the joint: creep, construction tolerances, temperature range, bearing types and direction of allowed movements, skews, external restraints, etc., and appropriate factors of safety applied to the design. The rated movement of the joint should exceed the temperature movement by at least 20%. This excess allowance is intended to prevent destruction of the joint due to unpredictable movements of a given location and is included in the calculation of the tooth length in the computer program.

4. The minimum joint opening in the longitudinal direction shall be 1”. At maximum joint opening, the tooth overlap shall be 1 $^{1}/_{2}$”.

5. Align teeth in the direction that the longitudinal thermal movement will occur. Special care needs to be taken on curved structures. When teeth do not align with the parapet, median, etc., a note shall be added to the plans to dimension a sufficient gap between the parapet, median, etc.. Sliding plates are to be provided for the transverse component of movement.

6. Where bicycle use is anticipated, use special floor plates in the shoulder area. Free ends of floor plates shall point in the direction of travel.

7. Maximum tooth length is determined by limiting the tooth plate thickness to 3”. Greater tooth length can be accommodated by special design and providing support plates beneath the teeth.

8. Coordinate the details of the diaphragms supporting tooth joints between the joint standard and the structural steel details. Also, coordinate the location of the shear connectors on the ends of steel beams/girders. Provide adequate distance between centerline of joint and centerline of bearing to accommodate the joint. On skews, make sure that bearing stiffeners do not interfere with the trough.

9. Maximum length for W18x50 diaphragm is 15’-0”. A heavier section must be designed for longer spans.

NOTES TO DESIGNER (cont'd):

10. The length of the teeth may be increased on skews in order to provide room to get the trough in. The length of the teeth may also be increased at abutments in order to provide space between the backwall and the trough. The computer program will make these adjustments. Because of limited space next to abutment backwalls, it is preferable not to locate a tooth joint at an abutment when the teeth are short.

11. The space requirements for tooth expansion joints shall be determined prior to designing the beams/girders and supporting substructure.

12. Space is provided on standard BEJ-6 for steel beams/girders and BEJ-7 for concrete beams for the designer to detail a Part Plan and Part Section of the joint. These details are not provided on the standard because of the many possible combinations of skew, beam/girder spacing, beam/girder type, etc. Part Plan should be long enough to cover the blockout area and wide enough to cover two beams/girders and the slab cantilever.

13. The Tooth Expansion Joint Program uses the following values and formulas:

    TL = Tooth length (inches)

    E = 0.0000065 in/in/°F for steel beams/girders

    E = 0.000006 in/in/°F for concrete beams

    T = 120 ° F temperature range for steel beams/girders

    T = 80 ° F temperature range for concrete beams

    S = Total thermal movement distance (feet)

    F = Factor of safety of 1.25

    CLR = Minimum clear distance between end plates.

    TL = 2.5 + 12 x E x T x S x F (provides for 1" min. opening and 1 $^1/_2$" min. tooth lap
    Min. TL = 5")

    CLR = 3 + (TL - 1)cos Ø If CLR ≥ 11", then trough type B
    Else if CLR ≥ 9" and at abutment, then trough type A
    Else if CLR ≥ 7" and at pier, then trough type A
    Else adjust tooth length to meet the above minimum CLR

    Dimension A = 1 + 12 x E x 60 x S x F at 60°F for steel beams/girders

    Dimension A = 1 + 12 x E x 40 x S x F at 60°F for concrete beams
    Adjust dimension A by 12 x E x 20 x S for each 20°F temperature change.

NOTES TO DESIGNER (cont'd):

Dimension B = TL – A

Dimension C = 0.78994 $\sqrt{(TL - 4)}$ (Based on 16k wheel of 20" width placed 4" from end of tooth and 30% impact. Minimum C = 1.5")

Dimension C = 0.88318 $\sqrt{(TL - 4)}$ (Based on 20k wheel of 20" width placed 4" from end of tooth and 30% impact. Minimum C = 1.5")

Dimension D = 0.2 x TL

Dimension E = $^1/_8$" for D < 2
$^3/_{16}$" for 2 ≤ D < 3
$^1/_4$" for D ≥ 3

Dimension F = Use sufficient length of $^3/_8$" fillet weld (Category E) to resist vertical wheel load and horizontal traction load with anchors at 12" spacing.

Dimension G = (CLR-3)/2

These formulas are provided for use in special design situations. Normally, the values will be obtained using the computer program for in-house design staff. The program may oversize the joint in order to provide sufficient space for the trough when the bridge is skewed. Values are rounded to fractions of an inch. See File No. BEJ-6/7/10/11/12-11 for additional program information.

14. Pay items for tooth expansion joints shall be based on tooth thickness and bid on a linear foot basis.

    Tooth Expansion Joint, (tooth thickness) L.F.

ADD THE FOLLOWING NOTES, DIMENSIONS, DETAILS, ETC. TO STANDARD:

BEJ-6: Complete Tables, Part Plan and Part Section. (Steel beams/girders)

BEJ-7: Complete Tables, Part Plan and Part Section. (Concrete beams)

BEJ-10:

<u>PLAN AT MEDIAN BARRIER:</u>

Modify if other than split barrier, F-shape (Standard BMB-5A) is used.

<u>SECTION M-M:</u>

Modify if other than split barrier, F-shape (Standard BMB-5A) is used.

ADD THE FOLLOWING NOTES, DIMENSIONS, DETAILS, ETC. TO STANDARD: (cont'd)

BEJ-10: (Cont.)

PLAN AT PARAPET:

Modify if other than F-shape parapet (Standard BPB-3A or BPB-3B) is used.

SECTION N-N:

Modify if other than F-shape parapet (Standard BPB-3A or BPB-3B) is used.

PLAN AT RAISED MEDIAN:

Modify if raised median differs.

SECTION P-P:

Modify if raised median differs.

PLAN AT SIDEWALK:

Modify based on rail and terminal wall details.

SECTION R-R:

Modify if other than Standard BR27C or BR27D series steel railing is used.

BEJ-11:

PLAN AT BARRIER SEPARATED PEDESTRIAN AND / OR BICYCLE FACILITY:

Modify based on rail and terminal wall details.

SECTION T-T:

Modify if other than Standard BR27C or BR27D series steel railing is used.

PLAN AT SHOULDER WHERE BICYCLE USE IS ANTICIPATED:

Modify based on rail and terminal wall details.

SECTION V-V:

Modify if other than Standard BR27C or BR27D series steel railing is used.

TOOTH EXPANSION JOINT

TYPICAL DETAILS:

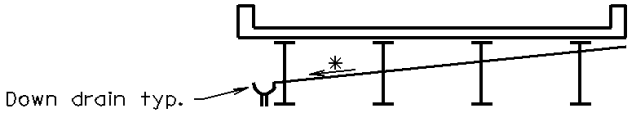

SINGLE SLOPE

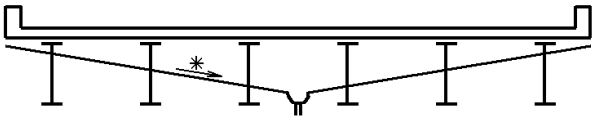

DOUBLE SLOPE

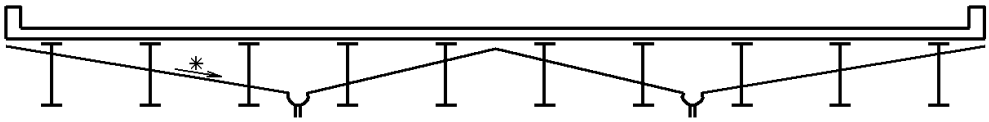

MULTIPLE SLOPES

TYPICAL TROUGH DETAILS

* Slope of trough to be a minimum of 1 in/ft. Make trough slope as steep as beam or girder depth will allow without using excessive down drains. Troughs should be accessible from beneath the bridge. Designer to provide details of drainage from down drain to the ground. Troughs should not hang beneath the bottom of the beams/girders. Locate trough high points between beams or girders where utilities exist.

ADDITIONAL TOOTH EXPANSION JOINT PROGRAM INFORMATION:

1. Program is run by typing TOOTHJTC and <ENTER>.
2. Input:
   a. Project number
   b. Description
   c. Total expansion length (feet)
   d. Skew angle (degrees)
   e. (S)teel or (C)oncrete beams/girders
   f. (I)=HS20 or (2)=HS25 Loading
   g. Joint located at (A)butment or (P)ier
   h. Weight data (Y)es or (N)o
   i. (R)erun or (Q)uit
3. Output:
   a. Project number
   b. Description
   c. Total expansion length (feet)
   d. Skew angle (degrees)
   e. Type beams
   f. Type loading
   g. Joint location
   h. Trough type
   i. Tooth length L
   j. Dimension A and B Table
   k. Dimension C
   l. Dimension D
   m. Dimension E
   n. Dimension F
   o. Dimension G
   p. Approximate elastomer depth below bottom of plates
   q. Weight data

Tooth Expansion Joint Program for use by in-house design staff only.