STATE	FEDERAL AID ROUTE	FEDERAL AID PROJECT	STATE ROUTE	STATE PROJECT	SHEET NO.
VA.	—				

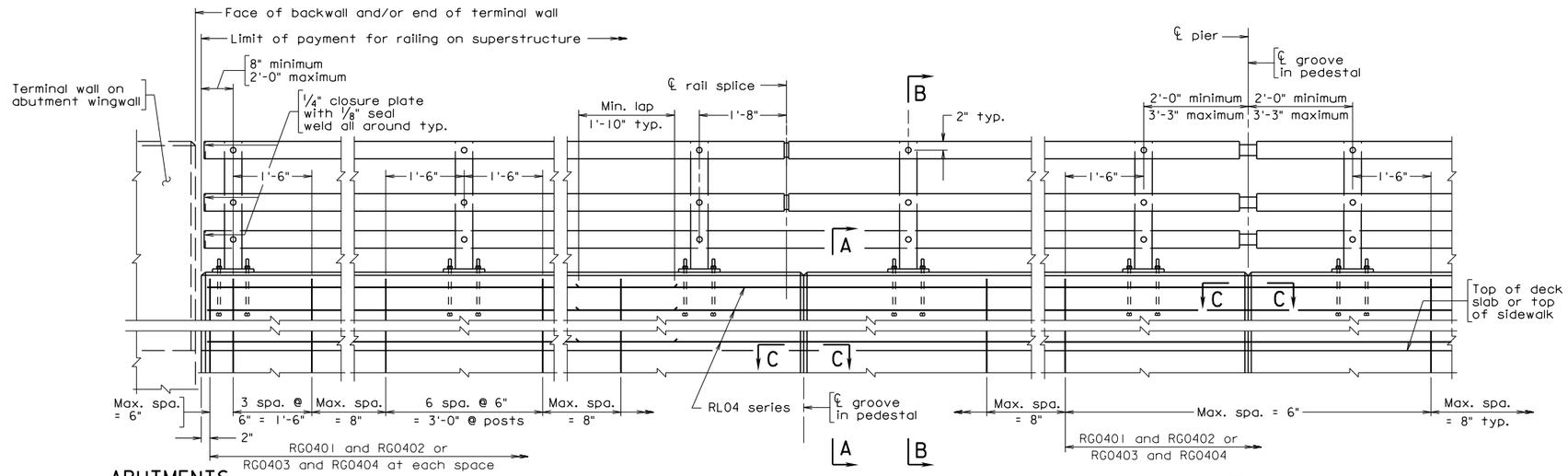

ABUTMENTS
Terminal Wall on Wingwall

ELEVATION

PIERS

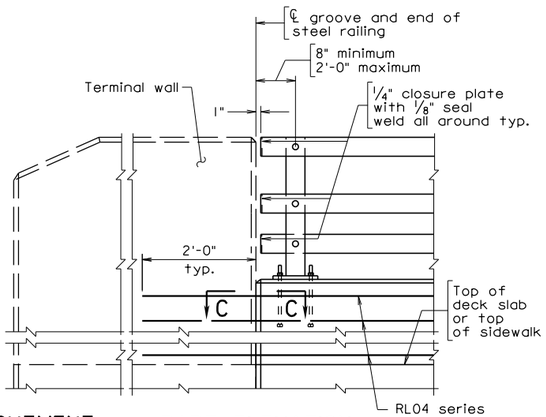

ABUTMENT

PART ELEVATION
Terminal Wall on Superstructure

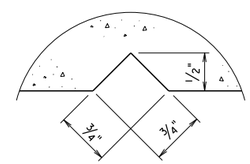

SECTION C-C
Full scale
Groove detail for both sides of rail

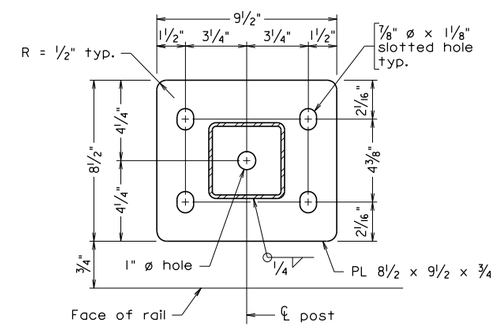

BASE PLATE DETAIL
Not to scale

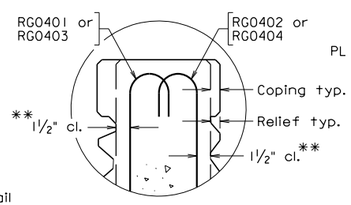

DETAIL A
Shown with architectural treatment on both sides

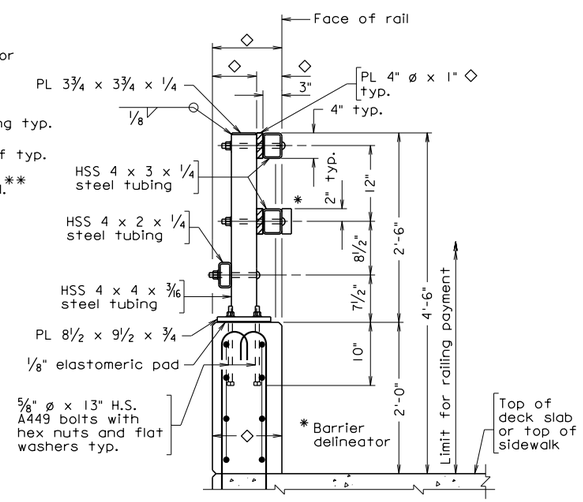

SECTION B-B
Scale: 1" = 1'-0"
Bolts through base plate shall be contained inside rebar cage

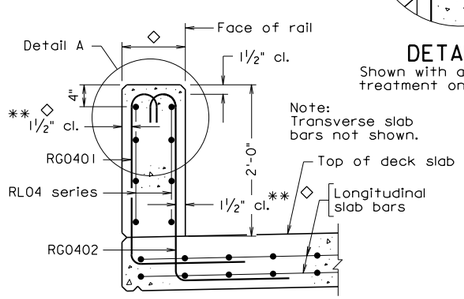

SECTION A-A
(Without sidewalk)
Not to scale

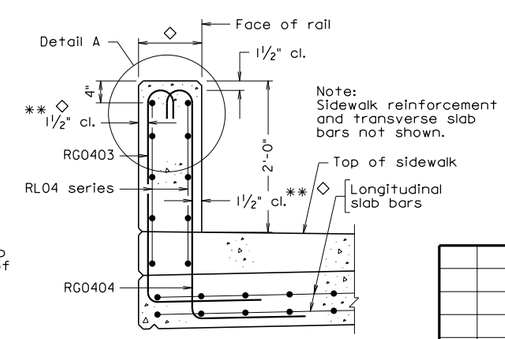

SECTION A-A
(With sidewalk)
Not to scale

◇ For dimensions and architectural treatment details, see sheet XX. For minimum cover, see Detail A. 1" spacer plate only required when treatment is on inside face.

Scale: 3/4" = 1'-0" unless otherwise noted.

©2016, Commonwealth of Virginia

Notes:

Plan dimensions shown are measured in the respective horizontal and vertical planes.

The Contractor shall determine all dimensions and details necessary for installation.

All concrete shall be Low Shinkage Class A4 Modified.

All bevels for concrete shall be 3/4".

The reinforcing steel shown has been detailed based on a standard 1/4" per foot cross slope and for an 8 1/2" slab depth. The Contractor shall adjust the reinforcing steel as required for other cross slopes and slab depths.

All reinforcing steel shall be Corrosion Resistant Reinforcing Steel, Class __.

For details and reinforcing steel schedule of terminal wall, see sheet ___.

Posts and rail members shall be ASTM A500 Grade B steel. Plates shall be ASTM A36 steel. Steel pipe sleeves shall be ASTM A53.

Bolts for attaching rails to post are 3/4" diameter round head (with slot in head), ASTM A449. All other bolts shall be ASTM A325 unless otherwise indicated in the details. Nuts shall be ASTM A563 Grade DH or ASTM A194 Grade 2H. Washers shall be ASTM F436.

For bolts attaching rails to posts, bolt extensions beyond nut shall be limited to the smaller of one and a half finishing turns or 1/4". If the extension is longer, excess shall be cut off and the edges of the bolt end ground so that no sharp edges remain. Cold galvanizing shall be applied to damaged galvanized areas.

All steel shall be hot dip galvanized.

Posts shall be equally spaced within a span. Maximum spacing is 7'-0". Minimum spacing is 6'-6"

Posts shall be seated on neoprene pads 1/8" minimum thickness, having a nominal durometer hardness of 60. Pads shall conform to post base dimensions.

Cut bottom of posts to match cross slope before welding so that posts will be vertical. Steel shims may be used to adjust post alignment, maximum thickness of shim build-up not to exceed 1/8". Where more tilting of the post is required, the concrete shall be ground down.

Rails to be continuous over a minimum of 3 posts before splicing.

Bid price for architectural treatment includes concrete in relief and coping.

For additional notes, see sheet__.

** The cover tolerance referenced in the VDOT Road and Bridge Specifications as -0" to +1/2" is shifted to -1/4" to +1/4" for placement of the RG04 series bars.

REINFORCING STEEL SCHEDULE

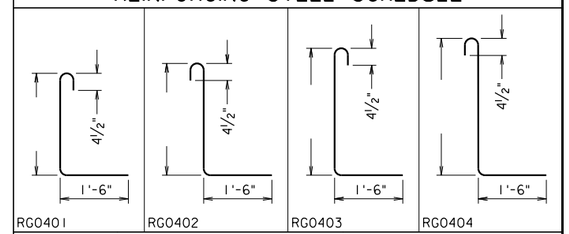

Mark	Size	No.	Length	Pin ø	Location
RG0401	#4			3"	Parapet
RG0402	#4			3"	Parapet
RG0403	#4			3"	Parapet
RG0404	#4			3"	Parapet
RL04	#4			—	Parapet

Dimensions in bending diagram are out-to-out of bars.

br27c15at.dgn

05-18-2016

BR27C-15-AT

Sealed and Signed by:
Prasad L. Nallapaneni
Lic. No. 033003
On the date of
May 18, 2016

A copy of the original sealed and signed standard drawing is on file in the Central Office.

VDOT S&B DIVISION
RICHMOND, VA
STRUCTURAL ENGINEER

No.	Description	Date

Revisions

COMMONWEALTH OF VIRGINIA
DEPARTMENT OF TRANSPORTATION

STRUCTURE AND BRIDGE DIVISION

54"-BR27C STEEL RAILING WITH ARCHITECTURAL TREATMENT

Designed: S&B DIV
Drawn: S&B DIV
Checked: S&B DIV

Date | Plan No. BR27C-15-AT | Sheet No.

54" STEEL RAILING

WITH ARCHITECTURAL TREATMENT

BR27C-SERIES

NOTES TO DESIGNER:

This railing is detailed for use as a traffic barrier on the outside of a structure adjacent to a pedestrian and/or bicycle facility where there is no barrier separating the pedestrian and/or bicycle facility from traffic. The railing is mounted on the top of sidewalk (for sidewalk or shared use path) or top of deck (for signed shared roadway or bicycle lane). The steel railing has a height of 4'-6" and is used for Adjusted Test Level TL-3 for MASH criteria. The crash tested rail has been modified to meet the rail opening requirements of the AASHTO *Standard Specifications for Highway Bridges* as well as the AASHTO *LRFD Bridge Design Specifications.* A design exception has been approved by the FHWA. The standard may be used when an open railing is required. This standard is used only when architectural treatment is required. If none is required, use standard BR27C-15.

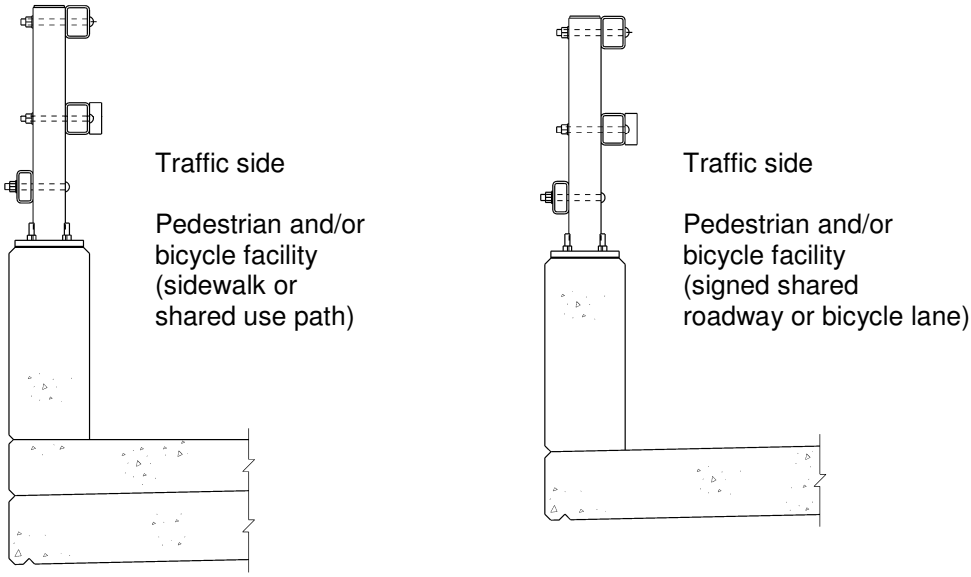

On Raised Sidewalk **On Deck Slab**

Standard BR27C-15

(Architectural treatment not shown)

For geometrics of pedestrian and/or bicycle facilities, see Part 2, Chapter 6, of this manual.

Do not use the non-standard bid item for this rail. The bid item for this rail is RAILING BR27C 3 RAILS. See Part 2, Chapter 3, of this manual.

The rail connections and notes (standards BR27C-16 and BR27C-17) and the appropriate terminal wall standard (BR27T-5-AT thru BR27T-8-AT) are to be included in the plans when using this standard.

54" STEEL RAILING

WITH ARCHITECTURAL TREATMENT

BR27C-SERIES

NOTES TO DESIGNER: (cont'd)

If an initial bituminous overlay is used on the bridge at the time of construction, vertical dimensions and dimensions for reinforcing steel need to be adjusted. The dimensions shown are established from the top of the roadway surface. Therefore, for example if 1" overlay at the roadway surface is set, the 2'-0" dimension and overall 4'-6" height of the rail would need to be adjusted to 2'-1" and 4'-7" respectively (Section B-B) and the 2'-0" dimension in Section A-A would have to be adjusted to 2'-1".

It is the Contractor's responsibility to determine the number of reinforcing bars required as well as any details or dimensions. Therefore, these items are to be left blank in the Reinforcing Steel Schedule.

ADD THE FOLLOWING NOTES, DIMENSIONS, DETAILS, ETC. TO STANDARD:

NOTES:

Complete corrosion resistant reinforcing steel note by adding Class I, II or III. For additional information on corrosion resistant reinforcing steel (CRR), see Structure and Bridge Division Instructional and Informational Memorandum (current IIM-S&B-81).

Complete sheet no. for terminal wall.

Complete sheet no. for additional notes.

REINFORCING STEEL SCHEDULE:

Add dimensions and length for rebar RG0401 and RG0402 and/or RG0403 and RG0404.

TITLE BLOCK:

Replace standard designation with plan number.

SECTION B-B:

Complete sheet no. for architectural drawing(s).