STATE	FEDERAL AID ROUTE	FEDERAL AID PROJECT	STATE ROUTE	STATE PROJECT	SHEET NO.
VA.	—				

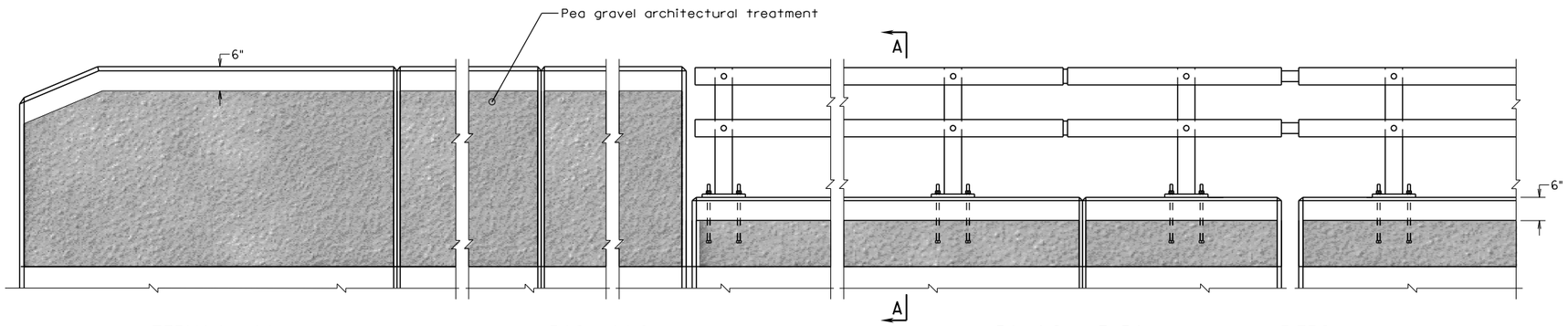

TERMINAL WALL

U-BACK WING

RAILING - 3 RAIL
2 rail shown details applicable for other BR27D rails.

PIERS
with joint in slab

ELEVATION

Notes:

Architectural treatment for the railing and terminal walls shall simulate pea gravel texture, similar to the pattern detailed on this sheet.

Form liner shall be arranged to produce a continuous pea gravel pattern without obvious repetition of the pattern.

Form liner pattern shall be inspected and approved by the Department.

Details shown for a 8'-0" long form liner. Contractor shall submit shop drawings with pattern layout for approval by the Department.

Architectural treatment shall be applied on XX of the barrier.

Width of terminal wall shall be equal to the width of the concrete pedestal of the railing in Section A-A.

Cost of architectural treatment for the parapet and terminal wall shall be included in the price bid for architectural treatment.

For all other dimensions and details not shown, see sheet xxx.

	Relief (in.)
r1	
r2	

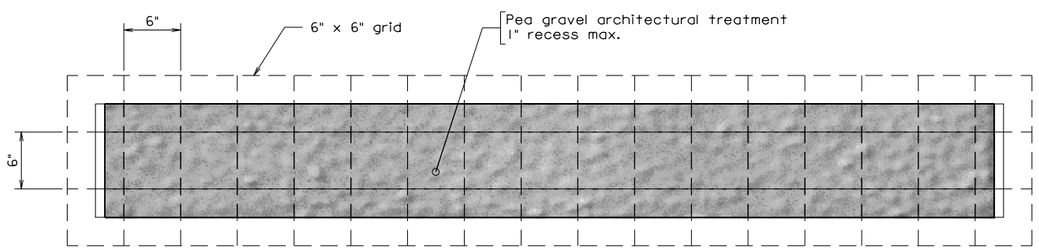

PEA GRAVEL TEXTURE DETAIL
Parapet - Outside Face
(Inside Face similar)

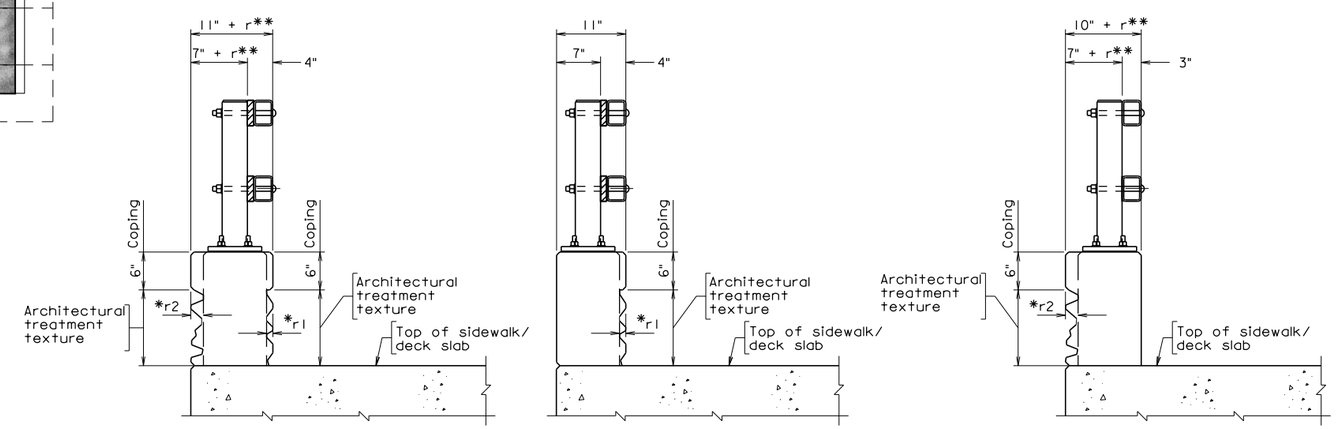

Both Faces

Inside Face

Outside Face

* r1 : relief on inside face is limited to 1"
r2 : relief on outside face is limited to 2"

** r = 1" for r2 ≤ 1"
r = 2" for 1" < r2 ≤ 2"

SECTION A-A
2 rail shown details applicable for other BR27D rails.

Not to scale

© 2015, Commonwealth of Virginia

No.	Description	Date

Revisions

COMMONWEALTH OF VIRGINIA
DEPARTMENT OF TRANSPORTATION

STRUCTURE AND BRIDGE DIVISION

ARCHITECTURAL TREATMENT WITH PEA GRAVEL FOR STEEL RAILING BR27D

Designed: S&B DIV
Drawn: S&B DIV
Checked: S&B DIV

Date

Plan No. BR27D-AT-2

Sheet No.

br27dat2.dgn

03-10-2015

BR27D-AT-2

Sealed and Signed by:
Prasad L. Nallapaneni
Lic. No. 033003
On the date of
March 10, 2015

A copy of the original sealed and signed standard drawing is on file in the Central Office.

VDOT S&B DIVISION
RICHMOND, VA
STRUCTURAL ENGINEER

ARCHITECTURAL TREATMENT

WITH PEA GRAVEL

FOR STEEL RAILING BR27D

NOTES TO DESIGNER:

This standard is to be used in conjunction with the appropriate BR27D rail standard(s) for detailing architectural treatment. The standard depicts three options for architectural treatment: inside face, outside face or both faces. For additional information, see Part 2, Chapter 5: Architectural Treatment of this manual.

Both a DGN file for the standard drawing and a PDF file for the rendering of the architectural treatment shown in Part 2, Chapter 5: Architectural Treatment, are attached to this standard.

ADD THE FOLLOWING NOTES, DIMENSIONS, DETAILS, ETC. TO STANDARD:

NOTES:

Modify note to specify face(s) of the parapet where architectural treatment is to be applied (inside face, outside face or both faces).

Complete sheet number for dimensions and details not shown.

TITLE BLOCK:

Replace standard designation with plan number.

RELIEF TABLE:

Complete table indicating relief(s) for the face(s) where architectural treatment is to be applied.