STATE	FEDERAL AID ROUTE	FEDERAL AID PROJECT	STATE ROUTE	STATE PROJECT	SHEET NO.
VA.	—				

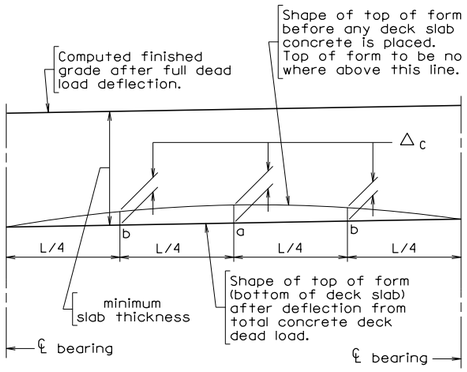

Adjustment of deck slab forms to correct for dead load deflections shall be made by varying thickness of concrete bolster between slab and beam without alteration of slab thickness. Longitudinal screed should be set above final finished grade by amounts = Δ_{C2}

Δ_{C1} = Deflection of beam from dead load of concrete deck slab, bolsters and diaphragms and does not include the deflection of the beam from its own weight.

Δ_{C2} = Deflection of composite section from dead load (e.g. parapet and curb added after deck is cast).

$\Delta_C = \Delta_{C1} + \Delta_{C2}$

ANTICIPATED DEAD LOAD DEFLECTION				
Beam	At a		At b	
	Δ_{C1}	Δ_{C2}	Δ_{C1}	Δ_{C2}
.	.	.	.	.
.	.	.	.	.

DEAD LOAD DEFLECTION DIAGRAM

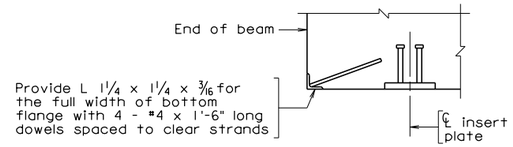

TYPICAL BOTTOM FLANGE EDGE DETAIL

Not to scale

Notes:

Insert plate shall provide uniform bearing over its entire contact area.

For beam details and notes, see sheet __.

For bearing details, see sheet __.

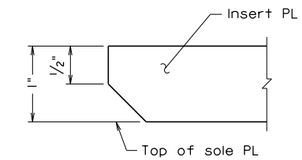

INSERT PLATE CHAMFER DETAIL

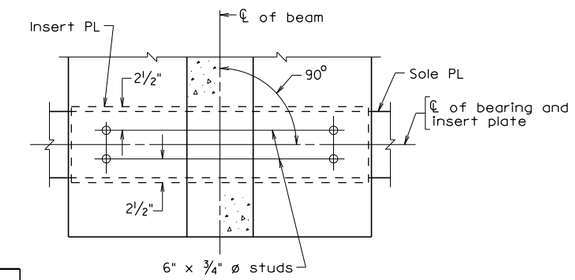

SECTION A-A

Beam Type	B	C	D
II	1'-6"	2	4"
III	1'-10"	2	6"
IV	2'-2"	4	4"
V	2'-4"	3	6"
VI	2'-4"	3	6"

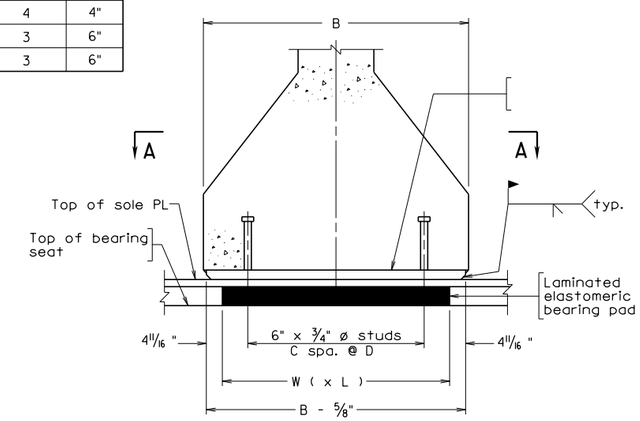

INSERT PLATE DETAILS

• For laminated elastomeric bearing pad dimensions, see bearing details sheet __ .

Not to scale

© 2015, Commonwealth of Virginia

No.	Description	Date

Revisions

COMMONWEALTH OF VIRGINIA
DEPARTMENT OF TRANSPORTATION

STRUCTURE AND BRIDGE DIVISION

PRESTRESSED CONCRETE BEAM MISCELLANEOUS

Designed:	Date	Plan No.	Sheet No.
Drawn:		PCB-MISC	
Checked:			

Sealed and Signed by:
Prasad L. Nallapaneni
Lic. No. 033003
On the date of
October 15, 2015

A copy of the original sealed and signed standard drawing is on file in the Central Office.

VDOT S&B DIVISION
RICHMOND, VA
STRUCTURAL ENGINEER

10-15-2015

pcbmisc.dgn

PCB-MISC

PRESTRESSED CONCRETE BEAM
AASHTO
MISCELLANEOUS BEAM DETAILS

NOTES TO DESIGNER:

Include this standard in the plan assembly when using AASHTO beam standards

Cells for modifying the standard are located in pcb.cel library.

ADD THE FOLLOWING NOTES, DIMENSIONS, DETAILS, ETC. TO STANDARD:

DEAD LOAD DEFLECTION DIAGRAM:

Deflection diagram is shown for a gradient. For hump or sag vertical curves, replace diagram with appropriate diagram from cell library. Complete table of anticipated dead load deflections using 1/8" increments. Fill in the value for " minimum slab thickness" on the deflection diagram.

TYPICAL BOTTOM FLANGE EDGE DETAIL:

Replace detail when distance from edge of insert plate to end of beam is less than or equal to 6" or full integral abutment is used with appropriate detail from cell library.