STATE	FEDERAL AID ROUTE	FEDERAL AID PROJECT	STATE ROUTE	STATE PROJECT	SHEET NO.
VA.	—				

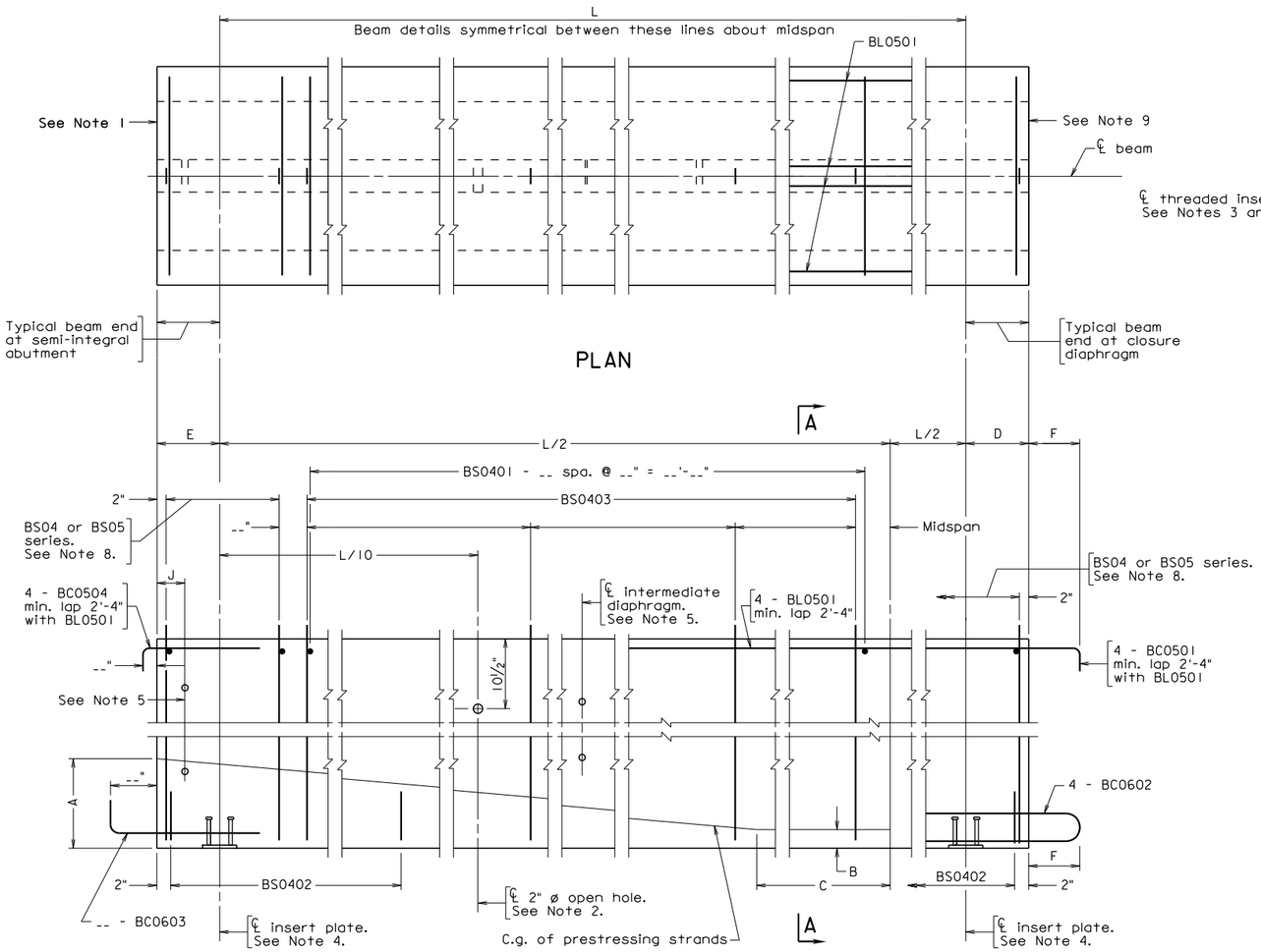

SECTION ON CENTERLINE

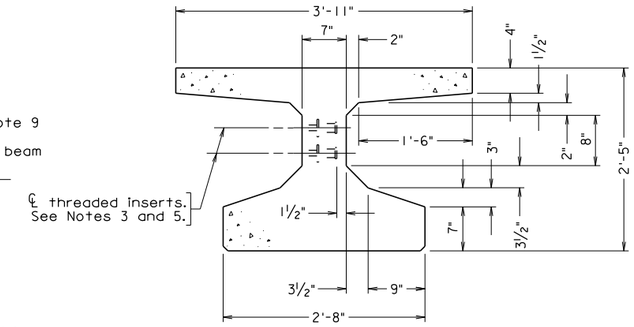

TYPICAL BEAM SECTION
Scale: 1" = 1'-0"

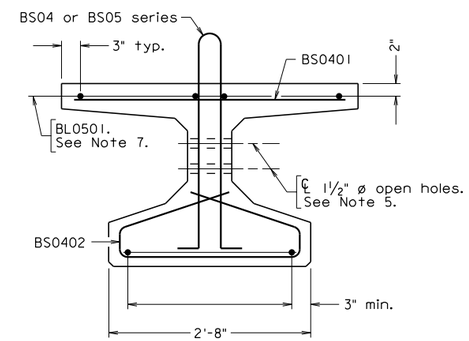

END VIEW
For dimensions not shown, see Typical Beam Section.
Scale: 1" = 1'-0"

Notes:

1. At beam ends use 1" deep recesses around local strand groups with 2" minimum edge clearances and fill with pneumatically applied mortar immediately after clipping strands. An approved epoxy mortar covering the ends of strands with a minimum thickness of ⅛" may be used as an alternate. Strands should be cool before mortar is applied. After mortar is allowed to cure, the entire end of beam shall be covered with epoxy type EP-3T.
2. Beams shall have 2" ø open holes formed with nonrigid tubing only on stream crossings. Holes may be slightly shifted to clear reinforcing bars and strands.
3. Threaded inserts shall be provided at all exterior beams and at interior beams where line of diaphragms is discontinued at an interior beam. Threaded inserts shall be ⅞" - 9 NC threaded plain ferrule inserts suitable for thin precast concrete elements having a minimum ultimate mechanical tensile strength of 8,000 pounds.
4. For details of insert plate, see sheet __.
5. 1½" ø open holes shall be formed with non-rigid tubing. For location of end and intermediate diaphagms, see Erection Diagram on sheet __. For location and number of holes or inserts required for end diaphragms and intermediate diaphragms and at integral abutments, see sheet __.
6. The Contractor, after written approval from the Engineer, may use different prestressing strand arrangement provided that the total prestressing force and c.g. are the same as shown on the plans.
7. 4 - 0.6" ø strands stressed to 8,000 lbs. may be substituted for 4 - BL05 series bars. Maximum distance from the outside strands to the flange edge may be increased from 3" to no more than 4".
8. For beam end reinforcing details, dead load deflection diagram reinforcing steel schedule and miscellaneous details, see sheets __.
9. At closure diaphragm, end strands may project 1" + from beam after clipping. End of beam shall be roughened in accordance with Section 405.05 of the Road and Bridge Specifications.
10. For details of closure diaphragms, see sheet __.
11. The design is based on a minimum of 90 days between release of strands and casting of closure diaphragm.

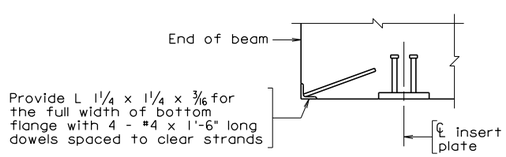

TYPICAL BOTTOM FLANGE EDGE DETAIL
Not to scale

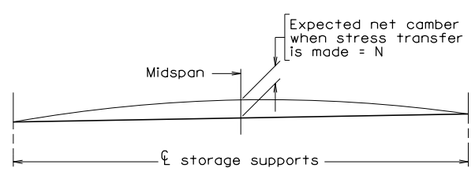

CAMBER DIAGRAM
Not to scale

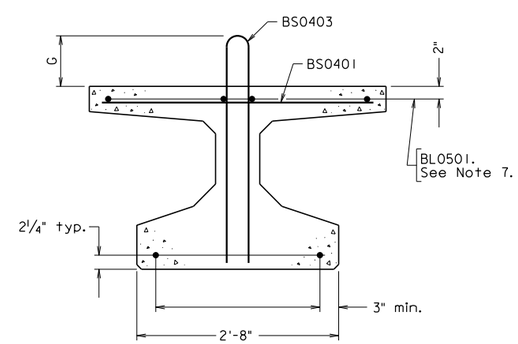

SECTION A-A
Scale: 1" = 1'-0"
For dimensions not shown, see Typical Beam Section.

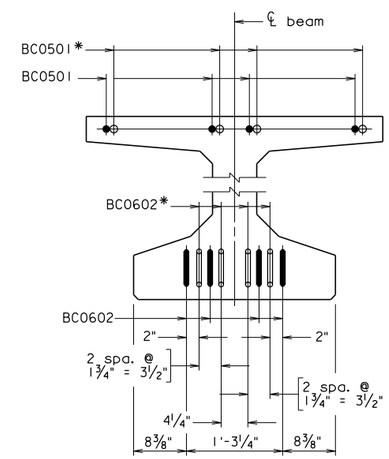

* Bars from beam in adjacent span

END VIEW AT CLOSURE DIAPHRAGM
Scale: 1" = 1'-0"

DATA AND DIMENSION TABLE

Span	Beam	Prestr. force at Release lb. per strand	No. and size of strands / beam	Net Camber N in.	A ft.-in.	B in	C ft.-in.	D ft.-in.	E ft.-in.	F in.	G in.	J in.	L ft.-in.	Assuming swivel hold-down device: Anticipated uplift force per strand, Fv - kips	Anticipated total uplift force all strands, ΣFv - kips	Anticipated number of hold-down devices per location
.	.	.	.	.	.	.	.	.	.	.	.	.	.	.	.	.
.	.	.	.	.	.	.	.	.	.	.	.	.	.	.	.	.
.	.	.	.	.	.	.	.	.	.	.	.	.	.	.	.	.
.	.	.	.	.	.	.	.	.	.	.	.	.	.	.	.	.

Scale: ¾" = 1'-0" unless otherwise noted

© 2015, Commonwealth of Virginia

Sealed and Signed by: Prasad L. Nallapaneni Lic. No. 033003 On the date of October 15, 2015

A copy of the original sealed and signed standard drawing is on file in the Central Office.

VDOT S&B DIVISION RICHMOND, VA STRUCTURAL ENGINEER

10-15-2015

PCBT-29C

pcbt29c.dgn

No.	Description	Date
	Revisions	

COMMONWEALTH OF VIRGINIA
DEPARTMENT OF TRANSPORTATION

STRUCTURE AND BRIDGE DIVISION

PRESTRESSED CONCRETE BULB-T PCBT-29

Designed: ..... Date
Drawn: .....
Checked: .....

Plan No. PCBT-29C

Sheet No.

PRESTRESSED CONCRETE BEAM
PCBT-29 BULB-T
CONTINUOUS SPAN

NOTES TO DESIGNER:

Standard is to be used for simple span, prestressed concrete Bulb-T's with a 29" depth, made continuous for composite dead load and live load plus impact.

Include standard PCBT-CLOS1 (Closure Diaphragm Details) in the plans when using this standard.

Include standard PCBT-MISC1 and PCBT-MISC2 (Miscellaneous Beam Details) in the plans when using this standard.

End details (PLAN and SECTION ON CENTERLINE) show typical beam ends at semi-integral abutment and closure diaphragm for 0° skew.

Details shown for typical beam end at closure diaphragm were developed based on the results from a study of positive moment connections for continuous precast concrete Bulb-T's conducted by VPI & State University.

SECTION ON CENTERLINE shows two stud shear connectors (total 4). Designer must check for required number, modify this sheet as needed and have it agree with the bearing standard sheet.

TYPICAL BOTTOM FLANGE EDGE DETAIL shows details when the distance between the edge of insert plate and end of beam is greater than 6" at a location other than a full integral abutment.

The designer shall ensure that bar BS0403 projects beyond the top flange of beam to the mid-depth of deck slab when determining the dimension "G".

The designer shall coordinate the location of diaphragm inserts and web through holes with that of draped strands to avoid conflicts. Adjust location of diaphragms as required.

See Part 2 Chapter 12 of this manual for practices and specific requirements of the Structure and Bridge Division for the design and detailing of prestressed concrete Bulb-T members including hold-down, anchorage zone design, lifting point and continuity requirements.

Cells for modifying the standard are located in pcb.cel library.

ADD THE FOLLOWING NOTES, DIMENSIONS, DETAILS, ETC. TO STANDARD:

PLAN:

When skew is not 0° and/or when actual end conditions differ from what is shown on the standard sheet, replace beam end detail(s) shown in PLAN with appropriate detail(s) from cell library.

PRESTRESSED CONCRETE BEAM
PCBT-29 BULB-T
CONTINUOUS SPAN

ADD THE FOLLOWING NOTES, DIMENSIONS, DETAILS, ETC. TO STANDARD (Continued):

SECTION ON CENTERLINE:

When actual end conditions differ from what is shown in the standard sheet, replace beam end detail(s) with appropriate detail(s) from cell library.

Add distance between BS04 or BS05 series and BS0403 bar. Provide spacing for BS0401 bar and for each BS0403 range. Where three BS0403 bar ranges are not used, adjust the details to add/delete additional ranges. For beam ends at full integral or semi-integral abutments, provide the distances for the BC0603 and BC0504 bars past the beam end and number of BC0603 bars.

END VIEW and SECTION A-A:

Complete details for strand pattern (spacings) for both details with low-relaxation strands.

DATA AND DIMENSION TABLE:

Complete table.

TYPICAL BOTTOM FLANGE EDGE DETAIL:

Replace detail when distance from edge of insert plate to end of beam is less than or equal to 6" or full integral abutment is used with appropriate detail from cell library (TBFED series).

NOTES:

Add appropriate plan sheet number(s) to Notes 4, 5, 8 and 10.

Where lifting points exceeding 2/3 height from the end of beam are assumed during design, add note, "Lifting points assumed for design are X'-X" from each beam end". Provide distance in note.