# MANUAL OF THE STRUCTURE AND BRIDGE DIVISION

## PART 5

# PRESTRESSED CONCRETE ADJACENT MEMBER STANDARDS

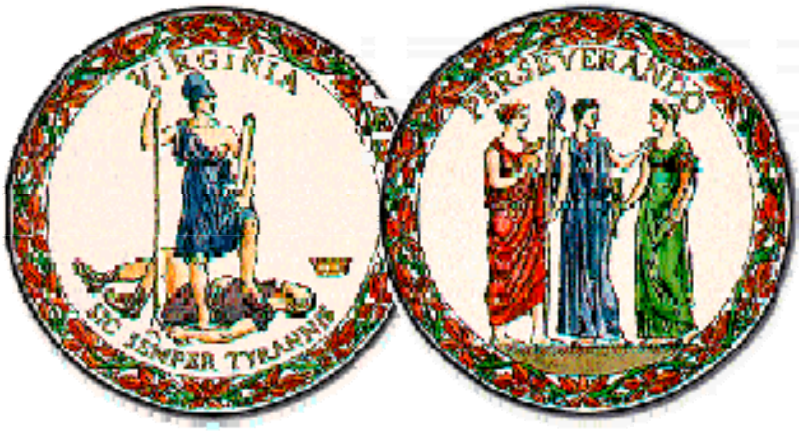


**VIRGINIA DEPARTMENT OF TRANSPORTATION**

# VDOT GOVERNANCE DOCUMENT

## VDOT Manual of the Structure and Bridge Division: Part 05: Prestressed Concrete Adjacent Member Standards

## OWNING DIVISION: Structure and Bridge

## DATE OF ISSUANCE: 12/28/2016

COMMONWEALTH of VIRGINIA

**DEPARTMENT OF TRANSPORTATION**
1401 EAST BROAD STREET
RICHMOND, 23219-2000

**Charles A. Kilpatrick, P.E.**
COMMISSIONER

December 28, 2016

**SUBJECT:** Manual of the Structure and Bridge Division – Part 5
Prestressed Concrete Adjacent Member Standards

**MEMORANDUM**

**TO:** Holders of Manual

**VOIDED:**

PSS Series Standards except PSS-3F renamed PST-5A, PSV-5A, PBT-5A and PBV-5A
PSS.CEL library

**NEW ISSUES:**

PST Series Standards: Voided Slabs – Transverse Tendons
PSV Series Standards: Voided Slabs – Virginia Adjacent Member Connections (VAMC)
PBT Series Standards: Box Beams – Transverse Tendons
PBV Series Standards: Box Beams – Virginia Adjacent Member Connections (VAMC)
PSC_VS.CEL library
PSC_BB.CEL library

**REVISIONS:**

| File Number | Description of change(s) |
|---|---|
| All files | Removed "VOL. V" from all footer File No. blocks. Removed "Volume V" from all sheet titles. Changed "Prestressed Concrete Slab Standards" to "Precast Concrete Adjacent Member Standards" in footers and sheet titles. |
| TOC-1 thru -4 | Revised dates and expanded from 1 to 4 sheets. Removed PSS standard series and PSS.CEL library. Added PST, PSV, PBT and PBV series. Added new cell libraries. |

**REVISIONS:**

| File Number | Description of change(s) |
|---|---|
| INSTR-1 thru -2 | Made miscellaneous changes to prestressed concrete voided slab content. Added prestressed concrete box beam standard content. Added detail information and requirements for transverse post-tensioning and Virginia Adjacent Member Connections. Updated library information. |
| INSTR-3 and -4 | Updated sheet numbers. |

**RETAIN THIS MEMO IN FRONT OF INDEX TO PART 5**

/original signed/
Junyi Meng, P.E.
Assistant State Structure and Bridge Engineer

For: Kendal R. Walus, P.E.
State Structure and Bridge Engineer

COMMONWEALTH of VIRGINIA

**DEPARTMENT OF TRANSPORTATION**
1401 EAST BROAD STREET
RICHMOND, 23219-2000

**Charles A. Kilpatrick, P.E.**
COMMISSIONER

March 10, 2015

**SUBJECT:** Manual of the Structure and Bridge Division – Part 5
Prestressed Concrete Slab Standards

**MEMORANDUM**

**TO:** Holders of Manual

**VOIDED:**

None

**NEW ISSUES:**

None

**REVISIONS:**

| File Number | Description of change(s) |
|---|---|
| TOC-1 | Revised dates. |
| INSTR-1 | Updated modification requirements and manual references. |

**RETAIN THIS MEMO IN FRONT OF INDEX TO PART 5**

/original signed/
Prasad Nallapaneni, P.E.
Assistant State Structure and Bridge Engineer

For: Kendal R. Walus, P.E.
State Structure and Bridge Engineer

COMMONWEALTH of VIRGINIA

**DEPARTMENT OF TRANSPORTATION**
1401 EAST BROAD STREET
RICHMOND, 23219-2000

**Gregory A. Whirley**
COMMISSIONER

August 30, 2012

**SUBJECT:** Manual of the Structure and Bridge Division
Volume V – Part 5
Prestressed Concrete Slab Standards

**MEMORANDUM**

**TO:** Holders of Volume V – Part 5: Prestressed Concrete Slab Standards

The revision is intended to clarify modifications to standards. Design waivers/exceptions are required when changes to the standards are made.

**VOIDED:**

None

**NEW ISSUES:**

None

**REVISIONS:**

| File Number | Description of change(s) |
|---|---|
| TOC-1 | Revised date of sheet. |
| INSTR-1 | Revised modification policy. |

**RETAIN THIS MEMO IN FRONT OF INDEX TO VOLUME V – PART 5**

/original signed/
Julius F. J. Völgyi, Jr., P.E.
Assistant State Structure and Bridge Engineer

For: Kendal R. Walus, P.E.
State Structure and Bridge Engineer

COMMONWEALTH of VIRGINIA

**DEPARTMENT OF TRANSPORTATION**
1401 EAST BROAD STREET
RICHMOND, 23219-2000

**Gregory A. Whirley**
COMMISSIONER

August 7, 2012

**SUBJECT:** Manual of the Structure and Bridge Division
Volume V – Part 5
Prestressed Concrete Slab Standards

**MEMORANDUM**

**TO:** Holders of Volume V – Part 5: Prestressed Concrete Slab Standards

NOTES:

Standards are revised for corrosion resistant reinforcing (CRR) steel designations (Class I, II or III) that will be effective with the March 2013 ad date. For projects going to ad prior to that date, CRR steels that are designated on the standards must be changed to one or more of the following:

corrosion resistant reinforcing steel – low carbon chromium
corrosion resistant reinforcing steel – stainless clad
corrosion resistant reinforcing steel – solid stainless

For more information on CRR, see the current IIM-S&B-81.

**VOIDED:**

None

**NEW ISSUES:**

| File Number | Description of change(s) |
|---|---|
| PSS-1B-1, PSS-1B-2 and PSS-1B-3 | New Standard and Notes to Designer for voided slabs with concrete slabs. |
| PSSCELLS-5 and PSSCELLS-6 | Added new cells: EP15C, EP18C, EP21C, EP15D, EP18D and EP21D for exterior prestressed concrete slabs with concrete slabs. |

**REVISIONS:**

| File Number | Description of change(s) |
|---|---|
| TOC-1 | Revised date of applicable sheets. |
| PSS-1A-1 | Renamed standard “PSS-1” to “PSS-1A.” |
| PSS-1A-2 | Added “Asphalt Overlay” to title and renamed standard “PSS-1” to “PSS-1A.” |
| PSS-2-1 | Notes: Added “Class …” to Corrosion Resistant Reinforcing Steel. |
| PSS-2-3 | Under Notes, replaced “type” with “Class I, II or III.” |
| PSS-3F-1 | Notes: Added “Class ….” to Corrosion Resistant Reinforcing Steel. |
| PSS-3F-2 | Notes: Replaced “type” with “Class I, II or III.” |
| CELLINDEX-1 | Revised date of applicable cells and added two pages of cells. |
| PSSCELLS-1 and PSSCELLS-2 | Description: Revised “PSS-1” to “PSS-1A and PSS-1B.” |

**REVISIONS (continued):**

| File Number | Description of change(s) |
|---|---|
| PSSCELLS-3 and PSSCELLS-4 | Description: Revised “PSS-1” to “PSS-1A.” |
| PSSCELLS-7 thru PSSCELLS-10 | Moved contents to next page. |

**RETAIN THIS MEMO IN FRONT OF INDEX TO VOLUME V – PART 5**

/original signed/
Julius F. J. Völgyi, Jr., P.E.
Assistant State Structure and Bridge Engineer

For: Kendal R. Walus, P.E.
State Structure and Bridge Engineer

COMMONWEALTH *of* VIRGINIA

**DEPARTMENT OF TRANSPORTATION**
1401 EAST BROAD STREET
RICHMOND, 23219-2000

**Gregory A. Whirley**
COMMISSIONER

May 29, 2012

**SUBJECT:** Manual of the Structure and Bridge Division
Volume V – Part 5
Prestressed Concrete Slab Standards

**MEMORANDUM**

**TO:** Holders of Volume V – Part 5: Prestressed Concrete Slab Standards

**VOIDED:**

| File Number | Description of change(s) |
|---|---|
| None | |

**NEW ISSUES:**

| File Number | Description of change(s) |
|---|---|
| None | |

**REVISIONS:**

| File Number | Description of change(s) |
|---|---|
| TOC-1 | Revised date of applicable sheets. |
| PSS-1 | Revised Detail A, the longitudinal shear key, a Drip Detail and added requirement for 5,000 lb. min. strength for grout in notes. |
| PSS-3F | Revised the distance to bolts in Section E-E. Added 2 ft. dimension for concrete base in Section F-F. Revised slab extension from 2 ft. -3in. to 1ft.-2 in. in Abutment Elevation View. |
| CELLINDEX-1 | Revised date of applicable cells. |
| PSSCELLS-1 | Clarified the location of the transverse tendon in Cells VS15A, VS18A and VS21A. |
| PSSCELLS-2 | Clarified the location of the transverse tendon in Cells VS15B, VS18B and VS21B. |
| PSSCELLS-3 | Revised the location of the transverse tendon in Cells EP15A, EP18A and EP21A. |
| PSSCELLS-4 | Revised the location of the transverse tendon in Cells EP15B, EP18B and EP21B. |

**RETAIN THIS MEMO IN FRONT OF INDEX TO VOLUME V – PART 5**

/original signed/
Julius F. J. Völgyi, Jr., P.E.
Assistant State Structure and Bridge Engineer

For: Kendal R. Walus, P.E.
State Structure and Bridge Engineer

COMMONWEALTH of VIRGINIA

**DEPARTMENT OF TRANSPORTATION**
1401 EAST BROAD STREET
RICHMOND, 23219-2000

**Gregory A. Whirley**
Acting COMMISSIONER

June 14, 2010

**SUBJECT:** Manual of the Structure and Bridge Division
Volume V – Part 5
Prestressed Concrete Slab Standards

**MEMORANDUM**

**TO:** Holders of Volume V – Part 5: Prestressed Concrete Slab Standards

**VOIDED:**

| File Number | Description of change(s) |
|---|---|
| None | |

**NEW ISSUES:**

| File Number | Description of change(s) |
|---|---|
| None | |

**REVISIONS:**

Note: For all standards, the block with FHWA Region 3 and block in the upper right corner for Special Provisions/Copied Notes has been deleted. The copyright date has been changed to 2010.

**RETAIN THIS MEMO IN FRONT OF INDEX TO VOLUME V – PART 5**

/original signed/
Julius F. J. Völgyi, Jr., P.E.
Assistant State Structure and Bridge Engineer

For: Kendal R. Walus, P.E.
State Structure and Bridge Engineer

COMMONWEALTH of VIRGINIA

**DEPARTMENT OF TRANSPORTATION**
1401 EAST BROAD STREET
RICHMOND, 23219-2000

**David S. Ekern, P.E.**
COMMISSIONER

January 7, 2010

**SUBJECT:** Manual of the Structure and Bridge Division
Volume V – Part 5
Prestressed Concrete Slab Standards

**MEMORANDUM**

**TO:** Holders of Volume V – Part 5: Prestressed Concrete Slab Standards

**VOIDED STANDARDS:**

None

**NEW ISSUES:**

None

**REVISIONS:**

| File Number | Description of changes(s) |
|---|---|
| TOC-1 | Revised date. |
| PSS-2 | Revised the reinforcing steel note to call for corrosion resistant reinforcing steel (CRR). |
| PSS-2-3 | Added instructions for the designer to specify the type of CRR. |
| PSS-3F | Revised the reinforcing steel note to call for corrosion resistant reinforcing steel (CRR). |
| PSS-3F-2 | Added instructions for the designer to specify the type of CRR. |

**RETAIN THIS MEMO IN FRONT OF INDEX TO VOLUME V – PART 5**

/original signed/
Julius F. J. Völgyi, Jr., P.E.
Assistant State Structure and Bridge Engineer

For: Kendal R. Walus, P.E.
State Structure and Bridge Engineer

COMMONWEALTH of VIRGINIA

**DEPARTMENT OF TRANSPORTATION**
1401 EAST BROAD STREET
RICHMOND, 23219-2000

**David S. Ekern, P.E.**
COMMISSIONER

May 29, 2009

**SUBJECT:** Manual of the Structure and Bridge Division
Volume V – Part 5
Prestressed Concrete Slab Standards

**MEMORANDUM**

**TO:** Holders of Volume V – Part 5: Prestressed Concrete Slab Standards

**NOTE: Effective with the December Advertisement, Standards shall be sealed and signed in accordance with Volume V – Part 2, File No. 01.16.1 thru 01.16.7.**

**VOIDED STANDARDS:**

None

**NEW ISSUES:**

None

**REVISIONS:**

| File Number | Description of changes(s) |
|---|---|
| All standard sheets | All standard sheets have been revised to reflect the border for sealing and signing of plans. |
| CELL-INDEX-1 | Updated release date of cells. |
| PSSCELLS-5 thru -8 | Minor drafting corrections to cells ERD2L, ERD2R, ERD3L, ERD3R, RPINL, and RPINR. |

**RETAIN THIS MEMO IN FRONT OF INDEX TO VOLUME V – PART 5.**

/original signed/
Julius F. J. Völgyi, Jr., P.E.
Assistant State Structure and Bridge Engineer

For: Kendal R. Walus, P.E.
State Structure and Bridge Engineer

COMMONWEALTH of VIRGINIA

**DEPARTMENT OF TRANSPORTATION**
1401 EAST BROAD STREET
RICHMOND, 23219-2000

**David S. Ekern, P.E.**
COMMISSIONER

July 11, 2008

**SUBJECT:** Manual of the Structure and Bridge Division
Volume V – Part 5
Prestressed Concrete Slab Standards

**MEMORANDUM**

**TO:** Holders of Volume V – Part 5: Prestressed Concrete Slab Standards

All of the standard sheets in this series have been revised .Two blocks for the P.E. stamp have been added to the lower left hand corner and the copyright date has been changed to 2008. Some details have been rearranged to provide space for the P.E. stamps.

**NOTE: Standard sheets are not required to be sealed and signed at this time.**

**VOIDED STANDARDS:**

None

**NEW ISSUES:**

| File Number | Description |
|---|---|
| INSTR-2 and 3 | Added instructions for external users for accessing MicroStation (.dgn) files and cell library (pss.cel) and for printing manual. |

**REVISIONS:**

| File Number | Description of change(s) |
|---|---|
| TOC-1 | Added -DGN link to each standard file. Table of contents updated. Added –CEL link for cell library. |
| INSTR-1 | Falcon location is changed. |

**RETAIN THIS MEMO IN FRONT OF INDEX TO VOLUME V – PART 5.**

/original signed/
Julius F. J. Völgyi, Jr., P.E.
Assistant State Structure and Bridge Engineer

For: Kendal R. Walus, P.E.
State Structure and Bridge Engineer

COMMONWEALTH of VIRGINIA

**DEPARTMENT OF TRANSPORTATION**
1401 EAST BROAD STREET
RICHMOND, 23219-2000

**David S. Ekern, P.E.**
COMMISSIONER

August 31, 2007

**MEMORANDUM**

**TO:** Holders of Manual

**SUBJECT:** Manual of the Structure and Bridge Division
Volume V – Part 5
Prestressed Concrete Slab Standards

All of the standards in the Manual of the Structure and Bridge Division Volume V – Part 5 have been revised including the NOTES TO DESIGNER. Major revisions include updating the standards to the drafting requirements of the office practice (Manual of the Structure and Bridge Division, Volume V – Part 2, Chapter 1) and conversion to MicroStation V8. Due to the numerous changes, many editorial in nature, not all of the specific changes will be listed under REVISIONS. Only the major revisions will be noted. The cell library (pss.cel) has been also been revised. The CELLS-series sheets have been totally reformatted.

**VOIDED STANDARDS:**

None

**NEW ISSUES:**

None

**REVISIONS:**

As noted in the introduction, only the major changes are noted below:

PSS-1 Solid slab sections for exterior slabs in transverse section; full depth longitudinal shear key (Detail A) between slabs.

PSS-2 Two-piece bar vs. four-piece bar in Section E-E.

**REVISIONS (cont'd):**

| | |
|---|---|
| CELLS -series | As noted in the introduction, the cell library (pss.cel) has been revised. Exterior slabs are solid. Main purpose of this was to allow adequate anchorage for rail/parapet reinforcement without interference with the voids. The sheets have been totally reformatted. The sheets are now in 8 ½" x 11" format and include an index listing the cells in alphabetical order with a cross reference to the file number for easier location. |

# RETAIN THIS MEMO IN FRONT OF INDEX TO VOLUME V – PART 5

/original signed/
Julius F. J. Völgyi, Jr., P.E.
Assistant State Structure and Bridge Engineer

For: Kendal R. Walus, P.E.
State Structure and Bridge Engineer

COMMONWEALTH of VIRGINIA

**DEPARTMENT OF TRANSPORTATION**
1401 EAST BROAD STREET
RICHMOND, 23219-2000

**PHILIP A. SHUCET**
COMMISSIONER

November 1, 2004

Manual of the Structure and Bridge Division
Volume V – Part 5
Prestressed Concrete Slab Standards

**MEMORANDUM**

**TO:** Holders of Volume V – Part 5

**REVISIONS:**

The following sheets are revised:

TOC This sheet was previously named "INDEX." Sheets that are intended to be 11 x 17 are marked with an asterisk (*). Note added at the bottom of the sheet to explain asterisk symbol.

INSTR "Instructions" at top of sheet deleted. Added "'GENERAL" to title at bottom of sheet. "SHEET 2 of 2" in bottom right corner changed to SHEET 1 of 1."

NOTE: The borders on all 8 ½ x 11 sheets are now ½" except for the left which is 1". The font has been changed from Universe to Arial. In some instances the NOTES TO DESIGNER may have spilled over to additional sheet(s) due to the changes in the border and font. The 8 ½ x 11 sheets have not been redistributed.

**RETAIN THIS MEMO IN FRONT OF INDEX TO VOLUME V – PART 5.**

/original signed/
Julius F. J. Völgyi, Jr., P.E.
Assistant State Structure and Bridge Engineer

For: George M. Clendenin, P.E.
State Structure and Bridge Engineer

Attachments

COMMONWEALTH of VIRGINIA

**DEPARTMENT OF TRANSPORTATION**
1401 EAST BROAD STREET
RICHMOND, 23219-2000

**CHARLES D. NOTTINGHAM**
COMMISSIONER

**MALCOLM T. KERLEY**
STATE STRUCTURE AND BRIDGE ENGINEER

June 15, 2001

Manual of the Structure and Bridge Division
Volume V – Part 5
Prestressed Concrete Slab Standards

**MEMORANDUM**

**TO:** Holders of Volume V – Part 5

**NEW ISSUE:**

The Manual of the Structure and Bridge Division, Volume V – Part 5 --- Prestressed Concrete Slab Standards, is being reissued with the date of June 15, 2001 (06-15-01).

**REVISIONS:**

This reissue of the Prestressed Concrete Slab Standards incorporates the new border sheet and includes an update on drafting and detailing corrections, specification updates, and numerous other corrections/revisions. Standards with a date previous to the June 15, 2001 (06-15-01) issue have been placed in a VOIDED file for archival purposes.

## RETAIN THIS MEMO IN FRONT OF INDEX TO VOLUME V – PART 5.

Julius F. J. Völgyi, Jr., P.E.
Assistant State Structure and Bridge Engineer

For: Malcolm T. Kerley, P.E.
State Structure and Bridge Engineer

Attachments

# PART 5
# PRESTRESSED CONCRETE ADJACENT MEMBER STANDARDS

## TABLE OF CONTENTS


| FILE NO. | | TITLE | DATE |
|---|---|---|---|
| | | **TABLE OF CONTENTS AND GENERAL INSTRUCTIONS** | |
| TOC | -1 | Table of Contents | 28Dec2016 |
| TOC | -2 | Table of Contents | 28Dec2016 |
| TOC | -3 | Table of Contents | 28Dec2016 |
| TOC | -4 | Table of Contents | 28Dec2016 |
| INSTR | -1 | General Instructions | 28Dec2016 |
| INSTR | -2 | General Instructions | 28Dec2016 |
| INSTR | -3 | External Users: File Access Instructions | 28Dec2016 |
| INSTR | -4 | External Users: File Access Instructions | 28Dec2016 |
| | | **VOIDED SLABS – TRANSVERSE TENDONS** | |
| * PST-1 | -1 | Erection Diagram | 28Dec2016 |
| | -2 | Notes to Designer | 28Dec2016 |
| | -3 | Notes to Designer | 28Dec2016 |
| | -DGN | MicroStation Drawing File | |
| * PST-2A | -1 | Transverse and Typical Sections; Asphalt Overlay | 28Dec2016 |
| | -2 | Notes to Designer | 28Dec2016 |
| | -DGN | MicroStation Drawing File | |
| * PST-2B | -1 | Transverse and Typical Sections; Concrete Overlay | 28Dec2016 |
| | -2 | Notes to Designer | 28Dec2016 |
| | -3 | Notes to Designer | 28Dec2016 |
| | -DGN | MicroStation Drawing File | |
| * PST-3 | -1 | Exterior Slab; Type A | 28Dec2016 |
| | -2 | Notes to Designer | 28Dec2016 |
| | -3 | Notes to Designer | 28Dec2016 |
| | -DGN | MicroStation Drawing File | |
| * PST-4 | -1 | Interior Slab; Type B | 28Dec2016 |
| | -2 | Notes to Designer | 28Dec2016 |
| | -3 | Notes to Designer | 28Dec2016 |
| | -DGN | MicroStation Drawing File | |
| * PST-5A | -1 | Cast-in-Place Concrete Parapet (F-shape) | 07Aug2012 |
| | -2 | Notes to Designer | 28Dec2016 |
| | -DGN | MicroStation Drawing File | |
| * PST-6A | -1 | End Bearing and Waterproofing Details for Asphalt Overlay | 28Dec2016 |
| | -2 | Notes to Designer | 28Dec2016 |
| | -DGN | MicroStation Drawing File | |
| * PST-6B | -1 | End Bearing and Waterproofing Details for Concrete Overlay | 28Dec2016 |
| | -2 | Notes to Designer | 28Dec2016 |
| | -DGN | MicroStation Drawing File | |


* Indicates 11 x 17 sheet; all others are 8 ½ x 11.

# PART 5
# PRESTRESSED CONCRETE ADJACENT MEMBER STANDARDS

## TABLE OF CONTENTS


| FILE NO. | | TITLE | DATE |
|---|---|---|---|
| | | **VOIDED SLABS – VIRGINIA ADJACENT MEMBER CONNECTIONS (VAMC)** | |
| * PSV-1 | -1 | Erection Diagram | 28Dec2016 |
| | -2 | Notes to Designer | 28Dec2016 |
| | -3 | Notes to Designer | 28Dec2016 |
| | -DGN | MicroStation Drawing File | |
| * PSV-2A | -1 | Transverse and Typical Sections; Asphalt Overlay | 28Dec2016 |
| | -2 | Notes to Designer | 28Dec2016 |
| | -DGN | MicroStation Drawing File | |
| * PSV-2B | -1 | Transverse and Typical Sections; Concrete Overlay | 28Dec2016 |
| | -2 | Notes to Designer | 28Dec2016 |
| | -3 | Notes to Designer | 28Dec2016 |
| | -DGN | MicroStation Drawing File | |
| * PSV-3 | -1 | Exterior Slab; Type A | 28Dec2016 |
| | -2 | Notes to Designer | 28Dec2016 |
| | -3 | Notes to Designer | 28Dec2016 |
| | -DGN | MicroStation Drawing File | |
| * PSV-4 | -1 | Interior Slab; Type B | 28Dec2016 |
| | -2 | Notes to Designer | 28Dec2016 |
| | -3 | Notes to Designer | 28Dec2016 |
| | -DGN | MicroStation Drawing File | |
| * PSV-5A | -1 | Cast-in-Place Concrete Parapet (F-shape) | 07Aug2012 |
| | -2 | Notes to Designer | 28Dec2016 |
| | -DGN | MicroStation Drawing File | |
| * PSV-6A | -1 | End Bearing and Waterproofing Details for Asphalt Overlay | 28Dec2016 |
| | -2 | Notes to Designer | 28Dec2016 |
| | -DGN | MicroStation Drawing File | |
| * PSV-6B | -1 | End Bearing and Waterproofing Details for Concrete Overlay | 28Dec2016 |
| | -2 | Notes to Designer | 28Dec2016 |
| | -DGN | MicroStation Drawing File | |
| | | **BOX BEAMS – TRANSVERSE TENDONS** | |
| * PBT-1 | -1 | Erection Diagram; Transverse Tendons | 28Dec2016 |
| | -2 | Notes to Designer | 28Dec2016 |
| | -3 | Notes to Designer | 28Dec2016 |
| | -DGN | MicroStation Drawing File | |
| * PBT-2A | -1 | Transverse and Typical Sections; Asphalt Overlay | 28Dec2016 |
| | -2 | Notes to Designer | 28Dec2016 |
| | -DGN | MicroStation Drawing File | |


* Indicates 11 x 17 sheet; all others are 8 ½ x 11.

## PART 5
## PRESTRESSED CONCRETE ADJACENT MEMBER STANDARDS

## TABLE OF CONTENTS


| FILE NO. | | TITLE | DATE |
|---|---|---|---|
| | | **BOX BEAMS – TRANSVERSE TENDONS (continued)** | |
| * PBT-2B | -1 | Transverse and Typical Sections; Concrete Overlay | 28Dec2016 |
| | -2 | Notes to Designer | 28Dec2016 |
| | -3 | Notes to Designer | 28Dec2016 |
| | -DGN | MicroStation Drawing File | |
| * PBT-3 | -1 | Exterior Box; Type A | 28Dec2016 |
| | -2 | Notes to Designer | 28Dec2016 |
| | -3 | Notes to Designer | 28Dec2016 |
| | -4 | Notes to Designer | 28Dec2016 |
| | -DGN | MicroStation Drawing File | |
| * PBT-4 | -1 | Interior Box; Type B | 28Dec2016 |
| | -2 | Notes to Designer | 28Dec2016 |
| | -3 | Notes to Designer | 28Dec2016 |
| | -DGN | MicroStation Drawing File | |
| * PBT-5A | -1 | Cast-in-Place Concrete Parapet (F-shape) | 07Aug2012 |
| | -2 | Notes to Designer | 28Dec2016 |
| | -DGN | MicroStation Drawing File | |
| * PBT-6A | -1 | End Bearing and Waterproofing Details for Asphalt Overlay | 28Dec2016 |
| | -2 | Notes to Designer | 28Dec2016 |
| | -DGN | MicroStation Drawing File | |
| * PBT-6B | -1 | End Bearing and Waterproofing Details for Concrete Overlay | 28Dec2016 |
| | -2 | Notes to Designer | 28Dec2016 |
| | -DGN | MicroStation Drawing File | |
| | | **BOX BEAMS – VIRGINIA ADJACENT MEMBER CONNECTIONS (VAMC)** | |
| * PBV-1 | -1 | Erection Diagram | 28Dec2016 |
| | -2 | Notes to Designer | 28Dec2016 |
| | -3 | Notes to Designer | 28Dec2016 |
| | -DGN | MicroStation Drawing File | |
| * PBV-2A | -1 | Transverse and Typical Sections; Asphalt Overlay | 28Dec2016 |
| | -2 | Notes to Designer | 28Dec2016 |
| | -DGN | MicroStation Drawing File | |
| * PBV-2B | -1 | Transverse and Typical Sections; Concrete Overlay | 28Dec2016 |
| | -2 | Notes to Designer | 28Dec2016 |
| | -3 | Notes to Designer | 28Dec2016 |
| | -DGN | MicroStation Drawing File | |
| * PBV-3 | -1 | Exterior Box; Type A | 28Dec2016 |
| | -2 | Notes to Designer | 28Dec2016 |
| | -3 | Notes to Designer | 28Dec2016 |
| | -4 | Notes to Designer | 28Dec2016 |
| | -DGN | MicroStation Drawing File | |


* Indicates 11 x 17 sheet; all others are 8 ½ x 11.

# PART 5
# PRESTRESSED CONCRETE ADJACENT MEMBER STANDARDS

## TABLE OF CONTENTS


| FILE NO. | | TITLE | DATE |
|---|---|---|---|
| | | **BOX BEAMS – DROP-IN BARS (continued)** | |
| * PBV-4 | -1 | Interior Box; Type B | 28Dec2016 |
| | -2 | Notes to Designer | 28Dec2016 |
| | -3 | Notes to Designer | 28Dec2016 |
| | -4 | Notes to Designer | 28Dec2016 |
| | -DGN | MicroStation Drawing File | |
| * PBV-5A | -1 | Cast-in-Place Concrete Parapet (F-shape) | 07Aug2012 |
| | -2 | Notes to Designer | 28Dec2016 |
| | -DGN | MicroStation Drawing File | |
| * PBV-6A | -1 | End Bearing and Waterproofing Details for Asphalt Overlay | 28Dec2016 |
| | -2 | Notes to Designer | 28Dec2016 |
| | -DGN | MicroStation Drawing File | |
| * PBV-6B | -1 | End Bearing and Waterproofing Details for Concrete Overlay | 28Dec2016 |
| | -2 | Notes to Designer | 28Dec2016 |
| | -DGN | MicroStation Drawing File | |
| | | **CELL LIBRARIES: PSC_VS.CEL and PSC_BB.CEL** | |
| CELLINDEX -1 | | Index of Cells | 28Dec2016 |
| CELLINDEX -2 | | Index of Cells | 28Dec2016 |
| CELLINDEX -3 | | Index of Cells | 28Dec2016 |
| CELLINDEX -4 | | Index of Cells | 28Dec2016 |
| PSC_VS-1 thru -40 | | Cells | 28Dec2016 |
| PSC_BB-1 thru -44 | | Cells | 28Dec2016 |


* Indicates 11 x 17 sheet; all others are 8 ½ x 11.

**VIRGINIA DEPARTMENT OF TRANSPORTATION**
**MANUAL OF THE STRUCTURE AND BRIDGE DIVISION**

**PART 5**
**PRESTRESSED CONCRETE ADJACENT MEMBER STANDARDS**

The prestressed concrete voided slab standards include slab widths of 3'-0" and 4'-0" and depths of 15", 18" and 21". In general, the slabs are similar to the Precast/Prestressed Concrete Institute (PCI) standards and are economical for spans in the 25-50 foot range. For section properties, weights, etc., see Part 2, Chapter12, of this manual. Charts are developed to assist the designer in selecting economic slab sizes.

The prestressed concrete box beam standards include beam widths of 3'-0" and 4'-0" and depths of 27", 33", 39" and 42". In general, the beams are similar to the PCI standards and are economical for spans in the 50-80 foot range. For section properties, weights, etc., see Part 2, Chapter 12, of this manual. Charts are developed to assist the designer in selecting economic beam sizes.

Detail series are developed for transverse post-tensioning and Virginia Adjacent Member Connections (VAMC). For asphalt overlays, VAMC details shall be used where skew exceeds 10 degrees. For the remaining cases, contact the District Structure and Bridge Engineer for design approval on which detail type to use. See Part 2, Chapter 12, of this manual for additional requirements and guidelines including overlay type.

Refer to notes to designer for specific comments on each standard sheet.

The designer must consider the effects of net camber at release (including camber tolerance) and 1/4" per foot cross slope when setting the bituminous overlay thickness at face of parapet/railing curb. Parapet/railing heights and dimensions for reinforcing steel shown on the parapet/railing standards may require adjustments. For required adjustments, see Notes to Designer for parapet/railing standards.

Completion of the project block, title block and lower left corner shall be in accordance with the requirements of File Nos. 04.04-1 thru -2 of Part 2 of this manual and as specified herein.

If a standard sheet is modified by the designer, the letters "MOD." (without quotes) shall be added behind the standard designation in the lower left portion of the border, e.g., PST-1 MOD. Completing items on the standard that are indicated in the NOTES TO DESIGNER are not considered to be modifications. Minor modifications do not require approval (except for those proposed by Concessionaire/Design-Builder where emailed approval by the District Structure and Bridge Engineer documented to the project design file is required for any modification). See Part 1 of this manual, File No. Pre.02-6 for definition of minor modification.

Modifications not considered minor as defined in File No. Pre.02-6 require email approval by the District Structure and Bridge Engineer documented to the project design file unless a design exception is required.

In general, in the title block (lower right hand corner of sheet) Designed, Drawn and Checked are blank and need to be filled in with the appropriate initials. For standard sheets without any design or detailing requirements, Designed, Drawn and Checked are filled in with "S&B DIV." If the design or details are modified, these fields should be filled in with initials as appropriate.

## PART 5
## PRESTRESSED CONCRETE ADJACENT MEMBER STANDARDS

The CADD standard beam detail sheets are located in Falcon […\PROJECTS\br-stand\sbr\pss] directory (central office environment). The drawing file name for the standard sheet corresponds with the file number (name of standard sheet) as listed in the Table of Contents (minus the dash). For example, standard PST-3 is drawing pst3.dgn.

Two cell libraries (PS_VS.cel and PS_BB.cel) are included with the standards to allow the designer to add the required details on the standard sheets for voided slab and box beam bridges. The PS_VS and PS_BB sheets included herein depict the cells found in the cell libraries along with the name of the cell, an image of the cell, a description of the cell and the origin of cell. The origin of cell is indicated by a star ★. To attach a cell library, use the pull down menu in MicroStation under ELEMENT – CELLS and select FILE to get a drop-down listing of available cell libraries.

## PART 5

## PRESTRESSED CONCRETE ADJACENT MEMBER STANDARDS

For external users, the CADD standard detail sheets are attached to the PDF files for each drawing located on VDOT's Structure and Bridge Division website. The user will need Adobe Reader version 7.0 or higher to be able to access the files. Either click on the DGN link in the table of contents or click on the attachment tab in the PDF file for each standard sheet.

Using either method, the screen will appear similar to that shown below.

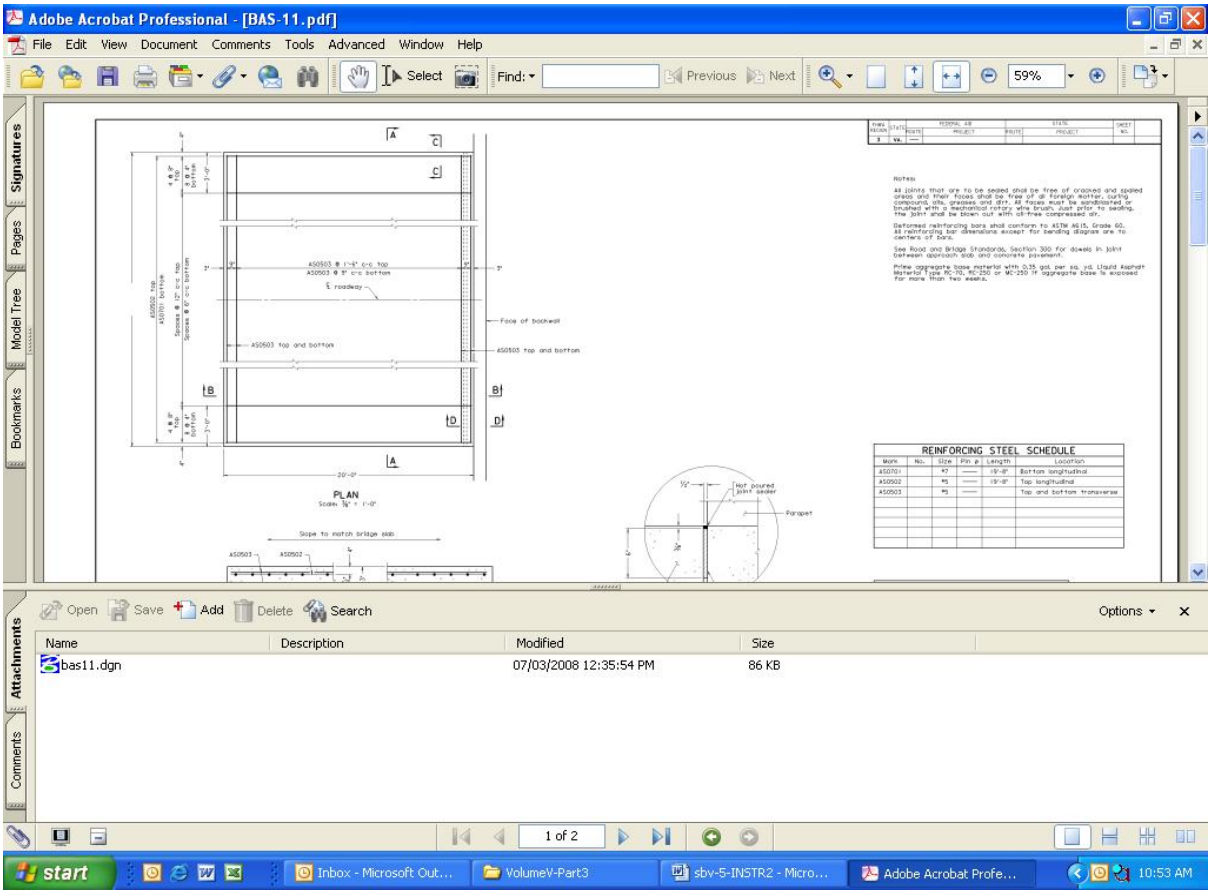


By left clicking on the icon, the following menu will appear:

Users may then save the file to their computer.

For accessing the cell library, click on CEL link in the table of contents.

To simplify printing of this manual, a PDF of the complete manual in one PDF file with no links may be accessed by clicking on the link below.

Full manual no links

If the printer has both 8 ½ x 11 and 11 x 17 paper sizes available, the drawings and notes to designer may be printed on the correct paper size by placing a check next to the item "Choose Paper Source by PDF page size" as shown in the dialog below:

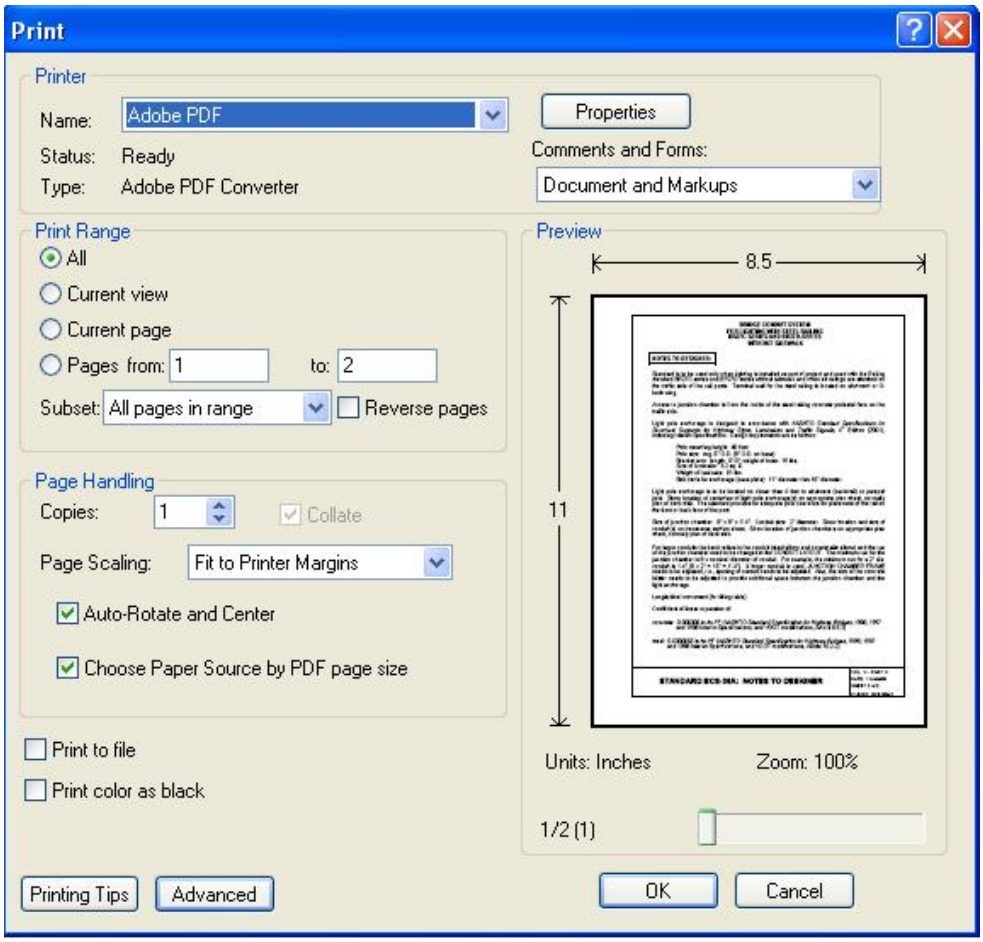


If the printer only has 8 ½ x 11 paper, the drawings will default to the reduced paper size.

Depending on the printer margins, the 11 x 17 drawing(s) may not be true half-size drawing(s).

| STATE | FEDERAL AID ROUTE | FEDERAL AID PROJECT | STATE ROUTE | STATE PROJECT | SHEET NO. |
|---|---|---|---|---|---|
| VA. | — | | | | |

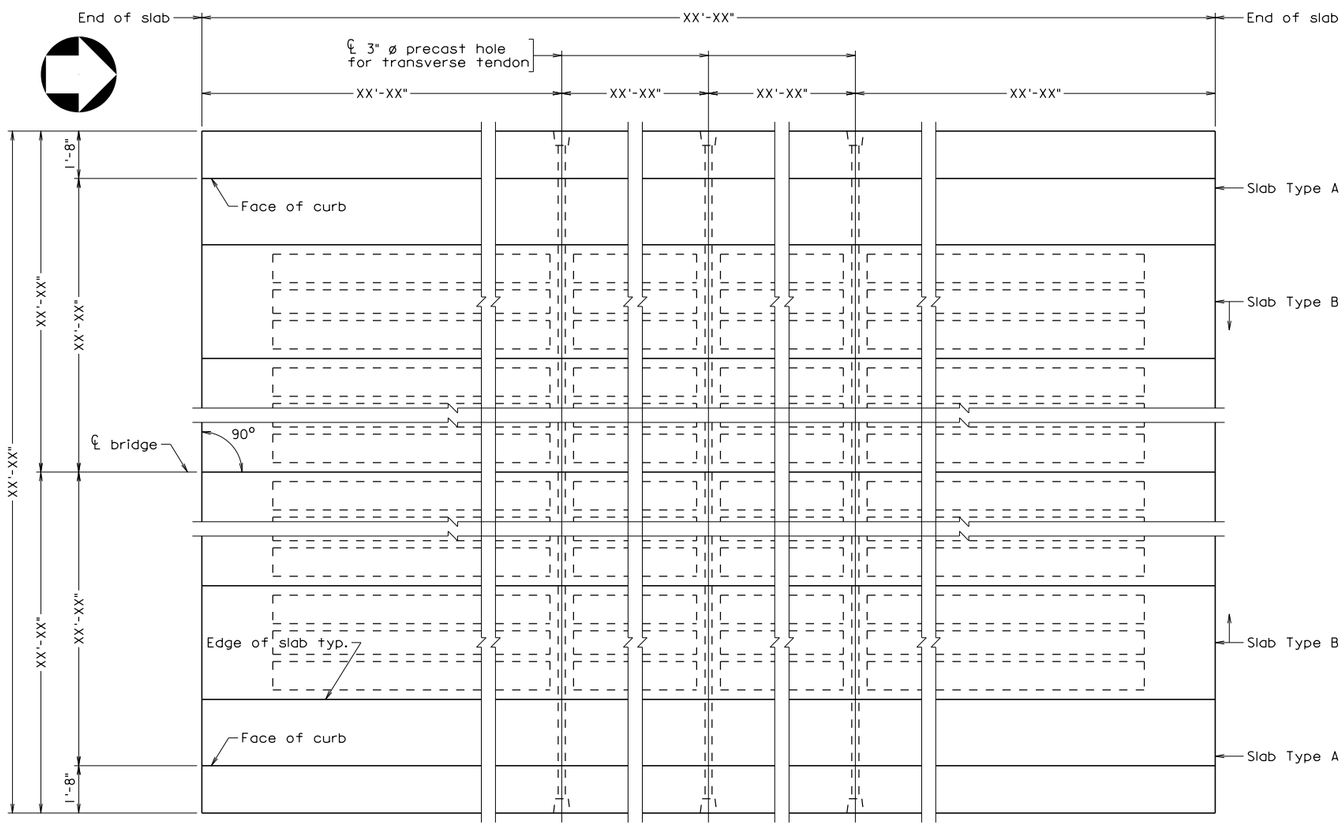


## ERECTION DIAGRAM

Shear key limits not shown for clarity

Notes:

For shear key dimensions, see Detail A on sheet __.

PST_1.dgn

12-28-2016

PST-1

Sealed and Signed by:
Junyi Meng
Lic. No. 033572
On the date of
December 28, 2016

A copy of the original sealed and signed standard drawing is on file in the Central Office.

VDOT S&B DIVISION
RICHMOND, VA
STRUCTURAL ENGINEER

Scale: 3/8" = 1'-0" unless otherwise noted

©2016, Commonwealth of Virginia

| No. | Description | Date |
|---|---|---|
| | | |
| | | |
| | | |
| | | |
| | | |
| | | |
| | | |

Revisions

COMMONWEALTH OF VIRGINIA
DEPARTMENT OF TRANSPORTATION

STRUCTURE AND BRIDGE DIVISION

ERECTION DIAGRAM

Designed: S&B DIV
Drawn: S&B DIV
Checked: S&B DIV

Date

Plan No. PST-1

Sheet No.

**PRESTRESSED CONCRETE AJACENT MEMBER STANDARD**
**VOIDED SLABS – TRANSVERSE TENDONS**
**ERECTION DIAGRAM**

**NOTES TO DESIGNER:**

Include standard PST-2A or -2B, PST-3, PST-4 and PST-6A or -6B in the plans when using this standard. Include standard PST-5A in the plans when using F-shape parapet.

PST series standards shall not be used with asphalt overlays where skew exceeds 10 degrees. In these instances, PSV series standards shall be used.

The default ERECTION DIAGRAM cell provided is for single span 4'-0" wide voided slabs on 0 degree skew where an edge of slab falls on the bridge centerline for slabs constrained from lateral movement by wing haunches cast tight against the slabs. F-shape parapet is shown with the back of parapet aligning with the exterior edge of slab.

Cells for completing the standard are located in the PSC_VS.CEL library.

The available ERECTION DIAGRAM cells are generic and may require modification or complete replacement as indicated below.

**ADD THE FOLLOWING NOTES, DIMENSIONS, DETAILS, ETC. TO STANDARD:**

ERECTION DIAGRAM:

Replace with appropriate cell where 3'-0" voided slabs are used, skew is other than 0 degrees or centerline of bridge falls within slab width.

Enter transverse tendon spacing. Cells detail tendons at quarter points for slabs constrained from lateral movement by wing haunches cast tight against the slabs. Remove tendon position at midspan for third points or both outside tendon positions for half point only. Where tendon positions are removed, remove void breaks to show continuous void outlines. See Part 2, Section 12.05, of this manual for tendon requirements. Add end tendon positions where slabs are not constrained from lateral movement centered on the width of end solid section (i.e., 1'-3" from end of slab). End tendon position or stirrup spacing may need adjustment to coordinate and eliminate conflicts.

Enter slab length, bridge width, distances to bridge centerline and distances to faces of curb/rail.

Where F-shape parapet is not used or the back of parapet/rail does not align with the exterior edge of slab, adjust details to show actual barrier width and position.

Orient North Arrow to correct direction.

For skews greater than 10 degrees, cells are not available and the ERECTION DIAGRAM shall be developed by the Designer to the actual skew. See Part 2, File No. 12.05-12 for sample sheet showing example details required.

**ADD THE FOLLOWING NOTES, DIMENSIONS, DETAILS, ETC. TO STANDARD (cont'd):**

ERECTION DIAGRAM (continued):

For multiple spans, the ERECTION DIAGRAM shall be developed by the Designer to provide the necessary details for the complete structure. Where a reduced scale is necessary, show the overall outer limits of the voids. Where reduced scale is such that showing overall outer limits of the voids reduces detail clarity, remove completely.

For stage construction, temporary barrier is typically necessary requiring an additional member type and the ERECTION DIAGRAM shall be developed by the Designer to provide the required details. See Part 2, File No. 12.05-12 for sample sheet showing example details required. An additional interior slab sheet will be necessary and can be developed by providing an additional PST-4 standard sheet in the plan set and modifying to provide the Type C details.

NOTES:

Enter sheet numbers for references to specific details.

| STATE | FEDERAL AID ROUTE | FEDERAL AID PROJECT | STATE ROUTE | STATE PROJECT | SHEET NO. |
|---|---|---|---|---|---|
| VA. | — | | | | |

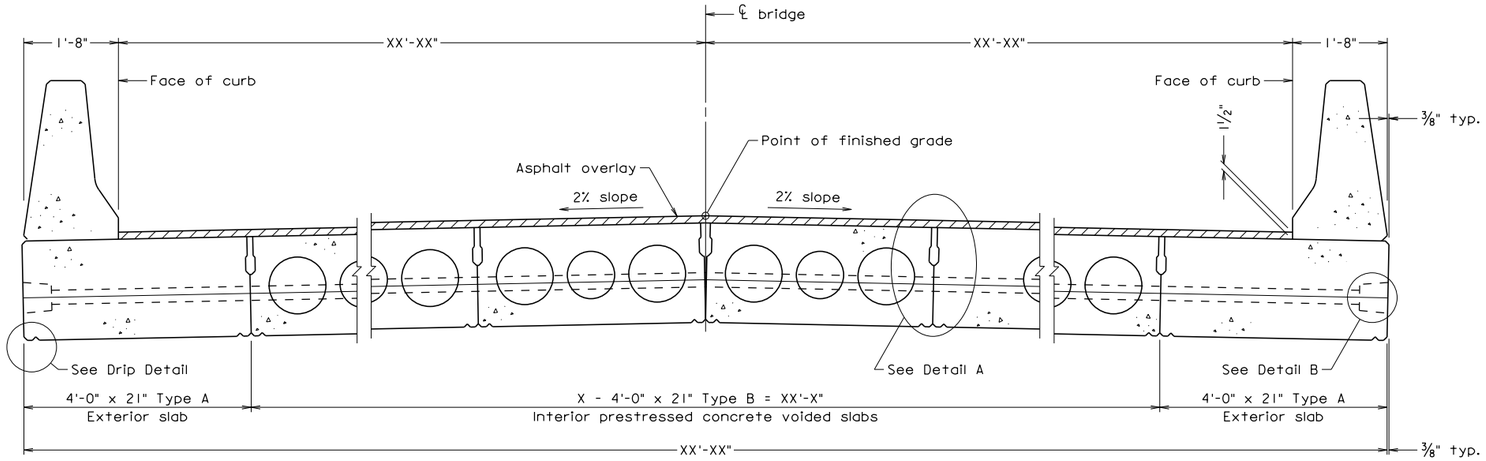


## TRANSVERSE SECTION

NOTES:

The bridge and roadway widths shown are nominal. Actual widths may vary due to fabrication and construction (gaps between slabs) tolerances.

Asphalt concrete overlay shall be Type SM-12.5D. Payment for the entire overlay shall be made at the unit price for asphalt concrete Type SM-2C.

Transverse tendons shall be ½" dia. coated, low-relaxation Grade 270 strand (Polystrand CP or equal) tensioned to 31,600 lbs. When the length of the strand used for transverse tendon is less than 20 feet, substitute a ⅞" dia. smooth rod conforming to ASTM A449 with 2½" long threaded ends tensioned to 30,000 lbs. for the ½" dia. strand. The rod shall have a washer and nut at each end. Rods, nuts, washers and 1" x 5" x 5" steel plates shall be galvanized.

Engineered Cementitious Compostite concrete shall be furnished and placed in accordance with the current VDOT Special Provision for Engineered Cementitious Composite (ECC). The cost of the ECC shall be included in the cost of the prestressed concrete members.

All keyway surfaces shall be cleaned of all dirt, laitance and loose aggregate by means of sandblasting and pre-wetted prior to the grouting of shear keys.

All grouting of shear keys with ECC shall be done in one continuous operation without interruption for each span. Care shall be taken to prevent leakage of ECC into precast holes for transverse tendons or from bottoms of shear keys.

Post-tensioning of transverse tendons and the casting of parapets shall not be done until all grouting of keys are completed and the ECC has reached a minimum strength of 4000 psi.

Entire deck shall be waterproofed in accordance with the requirements of Section 405 and Section 416 of the Specifications. For waterproofing details, see sheet ___.

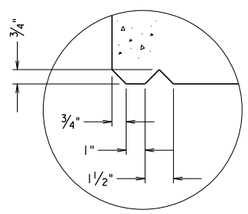


## DRIP DETAIL

Typ. each side of each member

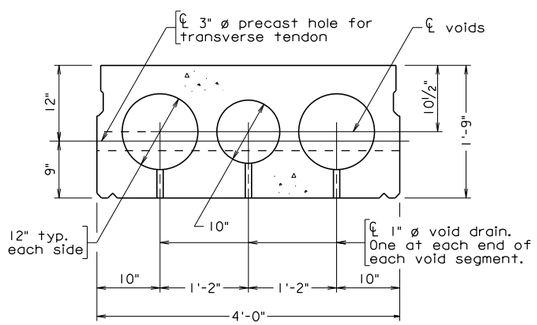


## TYPICAL INTERIOR SECTION TYPE B

Scale: 1" = 1'-0"

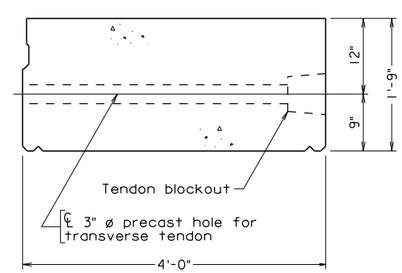


## TYPICAL EXTERIOR SECTION TYPE A

Scale: 1" = 1'-0"

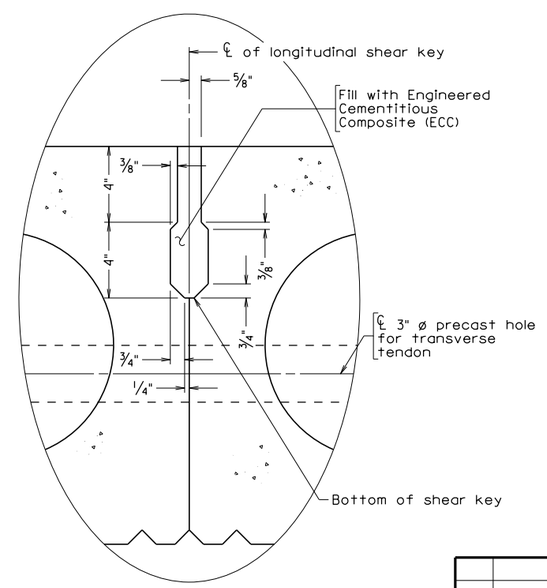


## DETAIL A

Overlay not shown

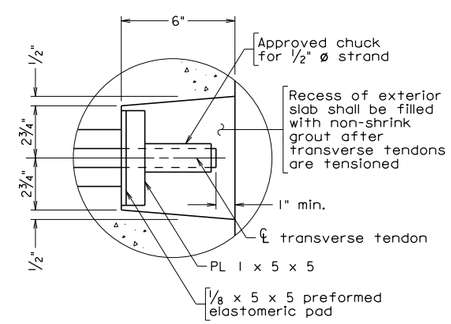


## DETAIL B

PST_2A.dgn

12-28-2016

Sealed and Signed by:
Junyi Meng
Lic. No. 033572
On the date of
December 28, 2016

A copy of the original sealed and signed standard drawing is on file in the Central Office.

VDOT S&B DIVISION
RICHMOND, VA
STRUCTURAL ENGINEER

PST-2A

Scale: ¾" = 1'-0" unless otherwise noted

©2016, Commonwealth of Virginia

| No. | Description | Date |
|---|---|---|
| | | |
| | | |
| | | |
| | | |
| | | |
| | | |
| | | |

Revisions

COMMONWEALTH OF VIRGINIA
DEPARTMENT OF TRANSPORTATION

STRUCTURE AND BRIDGE DIVISION

# TRANSVERSE AND TYPICAL SECTIONS; ASPHALT OVERLAY

Designed: S&B DIV
Drawn: S&B DIV
Checked: S&B DIV

Date

Plan No. PST-2A

Sheet No.

## NOTES TO DESIGNER:

Include standard PST-1, PST-3, PST-4 and PST-6A in the plans when using this standard. Include standard PST-5A in the plans when using F-shape parapet.

The designer shall ensure that the width of the pier cap or the seat of the abutment is sufficient for locating the anchor bolts.

The designer should avoid whenever possible the mixing of 3'-0" and 4'-0" wide slab sections.

For exterior slabs, use solid slab sections to avoid conflicts and problems with reinforcing steel for some parapets/railings (e.g., F-shape).

The default cells provided on the sheet are for 4'-0" x 21" voided slabs. Transverse Section is shown for slabs sloped to bridge crown, edge of slab falls on the bridge centerline and back of F-shape parapet aligned with the exterior edge of slab.

Cells for completing the standard are located in the PSC_VS.CEL library.

## ADD THE FOLLOWING NOTES, DIMENSIONS, DETAILS, ETC. TO STANDARD:

TRANSVERSE SECTION:

Enter dimensions from face of curb/rail to bridge centerline. Enter number of interior sections and total length of interior sections. Enter total width.

Modify F-shaped parapet position when not aligned with the edge of the exterior slab. Replace with sidewalk, rail, etc. as needed.

Replace with appropriate cell for other depths/widths and where slabs are level.

For stage construction, the Transverse Section shall be developed by the Designer. The Transverse Section may need to be drawn full width to properly show and dimension the location of the temporary barrier and a reduced scale may be necessary. An additional interior slab sheet is required and can be developed by providing an additional PST-4 standard sheet in the plan set and modifying to provide the Type C details.

TYPICAL INTERIOR SECTION and TYPICAL EXTERIOR SECTION:

Where 4'-0" x 21" sections are not used, replace with appropriate sections from cell library. For stage construction, add Type C Section.

DETAIL A:

Where 21" deep section is not used, replace with appropriate depth detail from cell library.

| STATE | FEDERAL AID ROUTE | FEDERAL AID PROJECT | STATE ROUTE | STATE PROJECT | SHEET NO. |
|---|---|---|---|---|---|
| VA. | — | | | | |

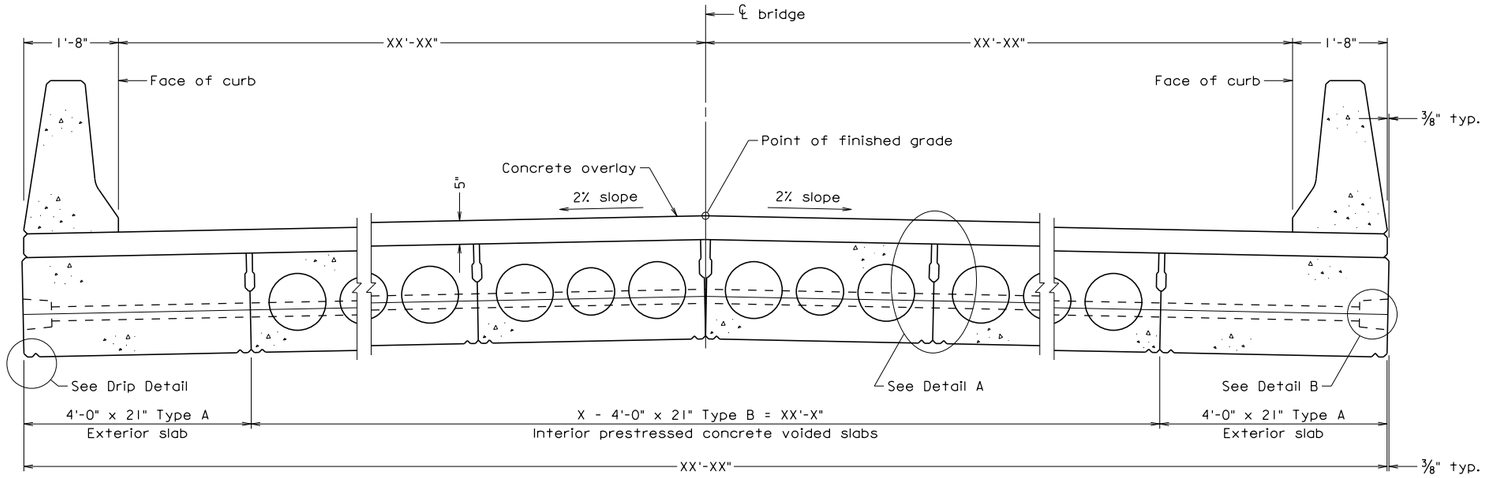


## TRANSVERSE SECTION

NOTES:

The bridge and roadway widths shown are nominal. Actual widths may vary due to fabrication and construction (gaps between slabs) tolerances.

Concrete for the overlay shall be Low Shrinkage Class A4 Modified having a minimum 28 day compressive strength of 4000 psi. Payment for the concrete overlay shall be made at the unit price for Concrete Class A4.

All reinforcing bars shall be Corrosion Resistant Reinforcing steel, Class __.

Top surfaces of all slabs shall be a clean concrete surface, free of laitance, with surface intentionally roughened to an amplitude of 1/4".

Transverse tendons shall be 1/2" dia. coated, low-relaxation Grade 270 strand (Polystrand CP or equal) tensioned to 31,600 lbs. When the length of the strand used for transverse tendon is less than 20 feet, substitute a 7/8" dia. smooth rod conforming to ASTM A449 with 2 1/2" long threaded ends tensioned to 30,000 lbs. for the 1/2" dia. strand. The rod shall have a washer and nut at each end. Rods, nuts, washers and 1" x 5" x 5" steel plates shall be galvanized.

Engineered Cementitious Composite concrete shall be furnished and placed in accordance with the current VDOT Special Provision for Engineered Cementitious Composite (ECC). The cost of the ECC shall be included in the cost of the prestressed concrete member.

All keyway surfaces shall be cleaned of all dirt, laitance and loose aggregate by means of sandblasting and pre-wetted prior to the grouting of shear keys.

All grouting of shear keys with ECC shall be done in one continuous operation without interruption for each span. Care shall be taken to prevent leakage of ECC into precast holes for transverse tendons or from bottoms of shear keys.

Post-tensioning of transverse tendons and the casting of parapets shall not be done until all grouting of keys are completed and the ECC has reached a minimum strength of 4000 psi.

For waterproofing details, see sheet __.

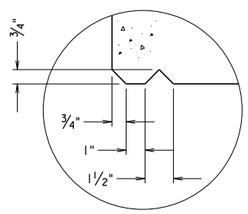


## DRIP DETAIL

Typ. each side of each member

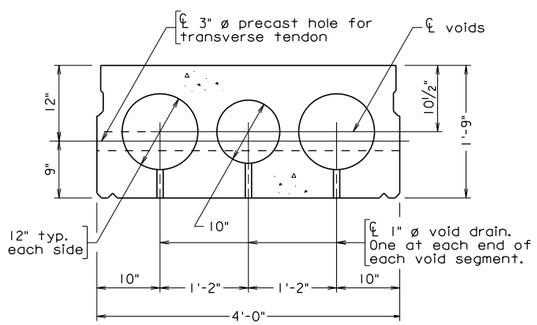


## TYPICAL INTERIOR SECTION TYPE B

Scale: 1" = 1'-0"

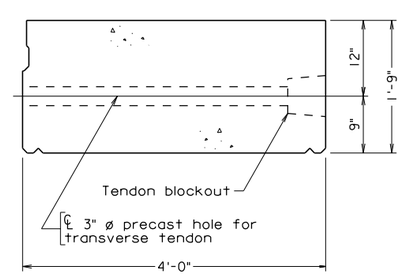


## TYPICAL EXTERIOR SECTION TYPE A

Scale: 1" = 1'-0"

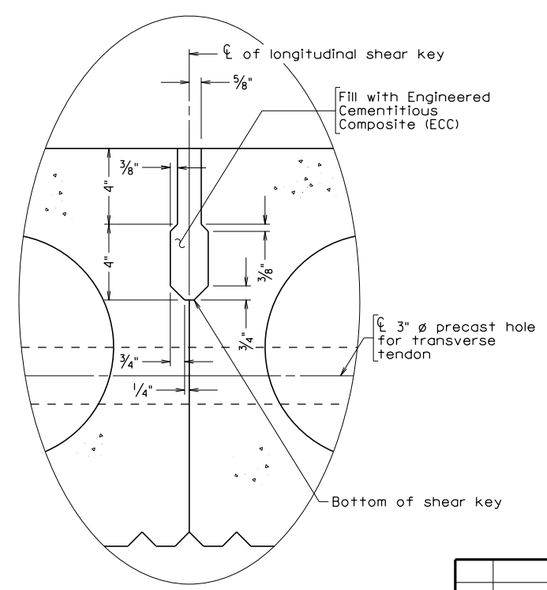


## DETAIL A

Overlay not shown

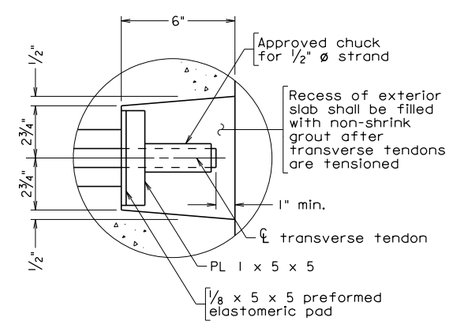


## DETAIL B

Scale: 3/4" = 1'-0" unless otherwise noted

©2016, Commonwealth of Virginia

| No. | Description | Date |
|---|---|---|
| | | |
| | | |
| | | |
| | | |
| | | |
| | | |
| | | |

Revisions

COMMONWEALTH OF VIRGINIA
DEPARTMENT OF TRANSPORTATION

STRUCTURE AND BRIDGE DIVISION

# TRANSVERSE AND TYPICAL SECTIONS; CONCRETE OVERLAY

Designed: S&B DIV
Drawn: S&B DIV
Checked: S&B DIV

Date

Plan No. PST-2B

Sheet No.

PST_2B.dgn

12-28-2016

Sealed and Signed by:
Junyi Meng
Lic. No. 033572
On the date of
December 28, 2016

A copy of the original sealed and signed standard drawing is on file in the Central Office.

VDOT S&B DIVISION
RICHMOND, VA
STRUCTURAL ENGINEER

PST-2B

## NOTES TO DESIGNER:

Include standard PST-1, PST-3, PST-4 and PST-6B in the plans when using this standard. Include standard PST-5A in the plans when using F-shape parapet.

The designer shall ensure that the width of the pier cap or the seat of the abutment is sufficient for locating the anchor bolts.

The designer should avoid whenever possible the mixing of 3'-0" and 4'-0" wide slab sections.

For exterior slabs, use solid slab sections to avoid conflicts and problems with reinforcing steel for some parapets/railings (e.g., F-shape).

The default cells provided on the sheet are for 4'-0" x 21" voided slabs. Transverse Section is shown for slabs sloped to bridge crown, edge of slab falls on the bridge centerline and back of F-shape parapet aligned with the exterior edge of slab.

Cells for completing the standard are located in the PSC_VS.CEL library.

## ADD THE FOLLOWING NOTES, DIMENSIONS, DETAILS, ETC. TO STANDARD:

TRANSVERSE SECTION:

Enter dimensions from face of curb/rail to bridge centerline. Enter number of interior sections and total length of interior sections. Enter total width. Modify concrete overlay thickness where 7 ½" is used.

Modify F-shaped parapet position when not aligned with the edge of the exterior slab. Replace with sidewalk, rail, etc. as needed.

Where scale allows, detail the reinforcing steel bars in the concrete overlay. Where scale is not sufficient, add Part Detail on this sheet or provide on separate sheet with Deck Plan. See Part 2, File No. 12.05-2 for minimum reinforcement requirements.

Replace with appropriate cell for other depths/widths and where slabs are level.

For stage construction, the Transverse Section shall be developed by the Designer. The Transverse Section may need to be drawn full width to properly show and dimension the location of the temporary barrier and a reduced scale may be necessary. An additional interior slab sheet is required and can be developed by providing an additional PST-4 standard sheet in the plan set and modifying to provide the Type C details.

TYPICAL INTERIOR SECTION and TYPICAL EXTERIOR SECTION:

Where 4'-0" x 21" sections are not used, replace with appropriate sections from cell library. For stage construction, add Type C Section.

**ADD THE FOLLOWING NOTES, DIMENSIONS, DETAILS, ETC. TO STANDARD (cont'd):**

DETAIL A:

Where 21" deep section is not used, replace with appropriate depth detail from cell library.

NOTES:

Complete second note by adding the Class I, II or III of corrosion resistant reinforcing steel required. For additional information on corrosion resistant reinforcing steel (CRR), see Structure and Bridge Division Instructional and Informational Memorandum (current IIM-S&B-81).

| STATE | FEDERAL AID ROUTE | FEDERAL AID PROJECT | STATE ROUTE | STATE PROJECT | SHEET NO. |
|---|---|---|---|---|---|
| VA. | — | | | | |

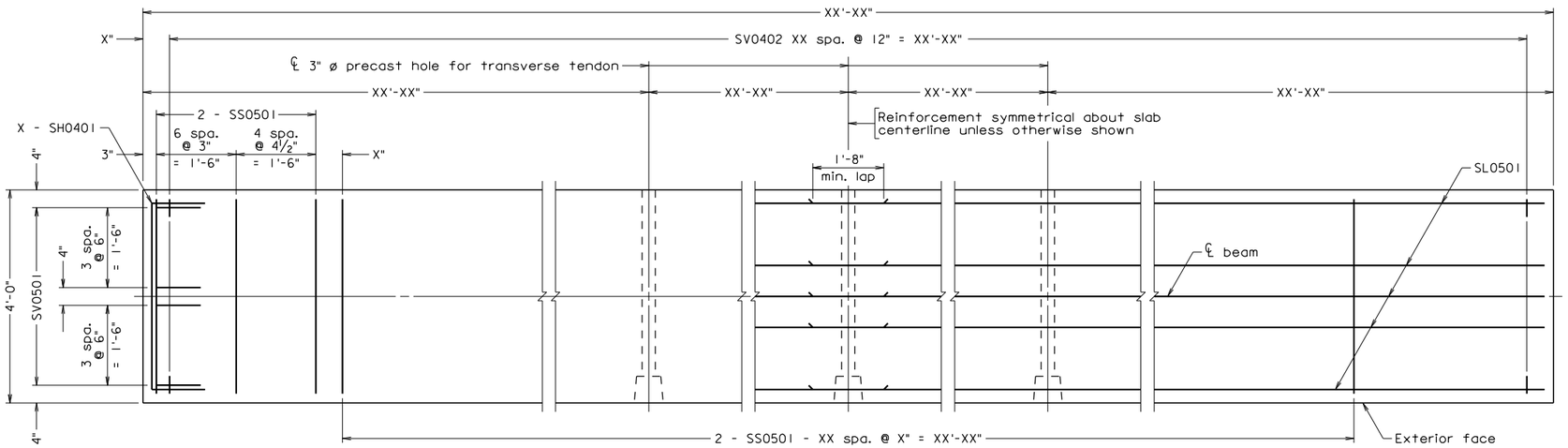


PLAN

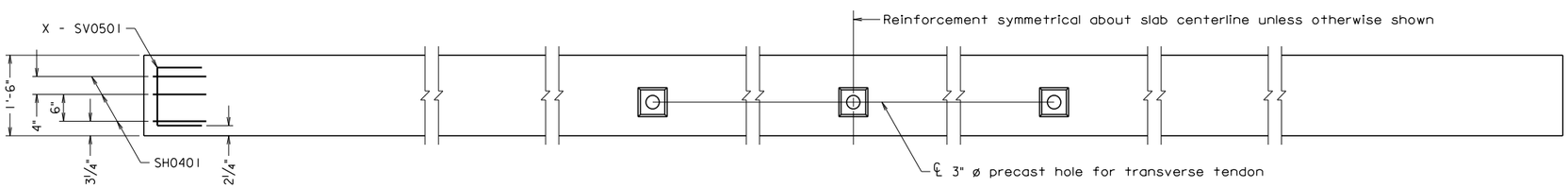


ELEVATION

Notes:

All reinforcing bars shall be Corrosion Resistant Reinforcing Steel, Class __.

SS series may be slighty shifted as directed by the Engineer to clear 3" ø hole for transverse tendon.

In lieu of splicing two reinforcing bars to form each stirrup, the stirrup may be made from one single bar.

The Contractor may submit an alternate prestressing strand pattern to the Engineer for approval.

The Contractor has the option of stressing two courtesy strands each to 8,000 lbs at the locations indicated.

Slab corners damaged during construction shall be restored to their shape as shown on the plans by an approved epoxy mortar.

Contractor shall determine location and spacing of ½" ø threaded inserts for parapet forms.

Due to construction tolerances, adjustment to the bridge seat elevations may be needed. It is the Contractor's responsibility to make such adjustment as directed by the Engineer to insure the full bearing of the slab on all the pads.

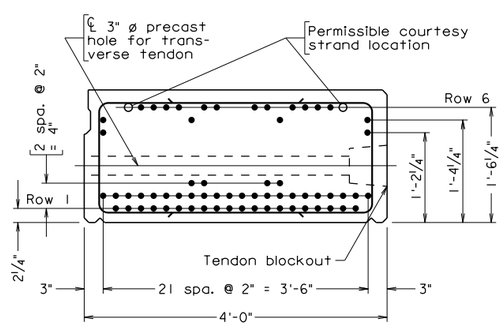


STRAND PATTERN

Scale: 1" = 1'-0"

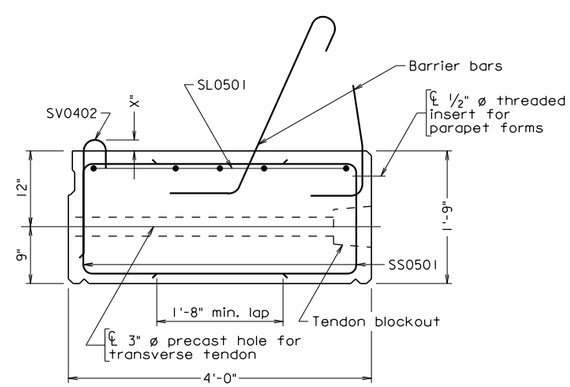


REINFORCING DETAILS

Scale: 1" = 1'-0"

## REINFORCING STEEL SCHEDULE

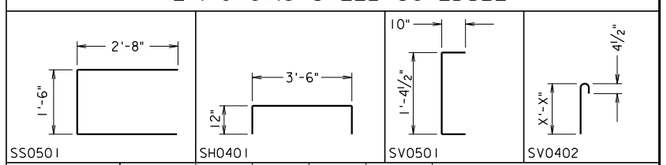


| Slab Size | Mark | No. | Size | Pin ø | Length | Location |
|---|---|---|---|---|---|---|
| 4'-0" x 21" Exterior slab Type A | SH0401 | | #4 | 2" | | End horizontal |
| | SL0501 | | #5 | —— | | Top longitudinal |
| | SS0501 | | #5 | 2½" | | Stirrup |
| | SV0501 | | #5 | 2½" | | End vertical |
| | SV0402 | | #4 | 3" | | Composite vertical |
| | | | | | | |
| | | | | | | |

Dimensions in bending diagram are out-to-out of bars.

Number of bars shown in table are per slab per slab type.

## PRESTRESSING STEEL DATA TABLE

| Strand Type | Slab Size | No. of strands per row: Row 1 | Row 2 | Row 3 | Row 4 | Row 5 | Row 6 | Distance from bottom of slab: Row 1 in. | Row 2 in. | Row 3 in. | Row 4 in. | Row 5 in. | Row 6 in. | Total number of strands per slab | Prestressing force per strand lbs. | Net camber N in. |
|---|---|---|---|---|---|---|---|---|---|---|---|---|---|---|---|---|
| 0.6" ø Low Relaxation Strands | 4'-0" x 21" Type A | | | | | | | | | | | | | | | |
| | | | | | | | | | | | | | | | | |

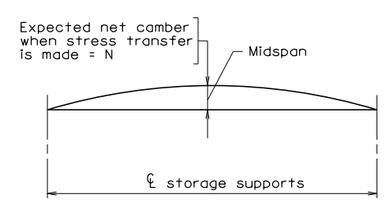


CAMBER DIAGRAM

Scale: ¾" = 1'-0" unless otherwise noted

©2016, Commonwealth of Virginia

| No. | Description | Date |
|---|---|---|
| | | |

Revisions

COMMONWEALTH OF VIRGINIA
DEPARTMENT OF TRANSPORTATION

STRUCTURE AND BRIDGE DIVISION

# EXTERIOR SLAB TYPE A TRANSVERSE TENDONS

Designed: S&B DIV
Drawn: S&B DIV
Checked: S&B DIV

Date

Plan No. PST-3

Sheet No.

PST_3.dgn

12-28-2016

Sealed and Signed by:
Junyi Meng
Lic. No. 033572
On the date of
December 28, 2016

A copy of the original sealed and signed standard drawing is on file in the Central Office.

VDOT S&B DIVISION
RICHMOND, VA
STRUCTURAL ENGINEER

PST-3

**PRESTRESSED CONCRETE AJACENT MEMBER STANDARD**
**VOIDED SLABS – TRANSVERSE TENDONS**
**EXTERIOR SLAB – TYPE A**

**NOTES TO DESIGNER:**

Include standard PST-1, PST-2A or -2B, PST-4 and PST-6A or -6B in the plans when using this standard. Include standard PST-5A in the plans when using F-shape parapet.

Cells for PLAN, ELEVATION, STRAND PATTERN AND REINFORCING DETAILS are provided for an exterior 4'-0" x 21" voided slab. Replace with appropriate cells where other width or depth is used. Cells for completing the standard are located in the PSC_VS.CEL library.

All bar sizes, reinforcement spacing and strand positions provided in cells are input field holders and are to be adjusted as per design.

**ADD THE FOLLOWING NOTES, DIMENSIONS, DETAILS, ETC. TO STANDARD:**

PLAN:

Place appropriate PLAN from cell library. Adjust bar sizes and spacing per design.

Enter transverse tendon spacing. Cells detail tendons at quarter points for slabs constrained from lateral movement by wing haunches cast tight against the slabs. Remove tendon position at midspan for third points or both outside tendon positions for half point only. Add end tendon positions where slabs are not constrained from lateral movement. See Part 2, Section 12.05, of this manual for tendon requirements.

Adjust end stirrup spacing as necessary and enter stirrup spacing throughout span.

Enter composite bar spacing or remove bars/dimensioning where composite bars are not used.

Remove SL series lap where not required.

For skews greater than 0 degrees, cells are not available and the PLAN shall be developed by the Designer to the actual skew.

ELEVATION:

Place appropriate ELEVATION from cell library. Adjust bar sizes and spacing per design. Adjust tendon positions to match PLAN view.

STRAND PATTERN:

Remove strands from positions not used per design. Adjust or add strand spacing dimensioning as needed per design. Courtesy strand positions must be on 2" x 2" grid established by position of bottom strands.

REINFORCING DETAILS:

Adjust bar sizes per design. Remove composite bars where not used. Coordinate longitudinal bars with strand positions shown in STRAND PATTERN to ensure conflicts do not occur.

**PRESTRESSED CONCRETE ADJACENT MEMBER STANDARD**
**VOIDED SLABS – TRANSVERSE TENDONS**
**EXTERIOR SLAB – TYPE A**

**ADD THE FOLLOWING NOTES, DIMENSIONS, DETAILS, ETC. TO STANDARD (cont'd):**

PRESTRESSING STEEL DATA TABLE:

Complete table. Ensure table content matches number and position of strands shown in STRAND PATTERN.

REINFORCING STEEL SCHEDULE:

Update schedule for specific section and skew. Verify all dimensions per design requirements and adjust where necessary. Where smaller size bar is adequate per design, adjust size and dimensions accordingly.

## REINFORCING STEEL SCHEDULE

| Slab size | Mark | Size | Dimension A | | | | Dimension B |
|---|---|---|---|---|---|---|---|
| | | | Skew angle | | | | |
| | | | 0° | over 0° to 15° | over 15° to 30° | over 30° to 45° | |
| 3'-0" x 15", x 18", x 21" | SH0401 | #4 | | | | | |
| 4'-0" x 15", x 18", x 21" | SH0401 | #4 | | | | | |
| All slab sizes | SL0501 | #5 | **Depends on beam length / whether splice req.'d** | | | | ------ |
| 3'-0" x 15" | SS0501 | #5 | | | | | |
| 3'-0" x 18" | SS0501 | #5 | | | | | |
| 3'-0" x 21" | SS0501 | #5 | | | | | |
| 4'-0" x 15" | SS0501 | #5 | | | | | |
| 4'-0" x 18" | SS0501 | #5 | | | | | |
| 4'-0" x 21" | SS0501 | #5 | | | | | |
| 3'-0" / 4'-0" x 15" | SV0501 | #5 | | | | | |
| 3'-0" / 4'-0" x 18" | SV0501 | #5 | | | | | |
| 3'-0" / 4'-0" x 21" | SV0501 | #5 | | | | | |
| All slab sizes | SV0402 | #4 | | | | | |

NOTES:

Complete corrosion resistant reinforcing steel note by adding the required Class. For additional information on corrosion resistant reinforcing steels (CRR), see Structure and Bridge Division Instructional and Informational Memorandum (current IIM-S&B-81).

ANCHOR DETAIL and ALTERNATE ANCHOR DETAIL:

Where the ends of prestessed concrete voided slabs are not constrained or buoyancy will cause uplift of the superstructure, add the details and notes from the cell library to this sheet. If insufficient room, move them to another sheet.

| STATE | FEDERAL AID ROUTE | FEDERAL AID PROJECT | STATE ROUTE | STATE PROJECT | SHEET NO. |
|---|---|---|---|---|---|
| VA. | — | | | | |

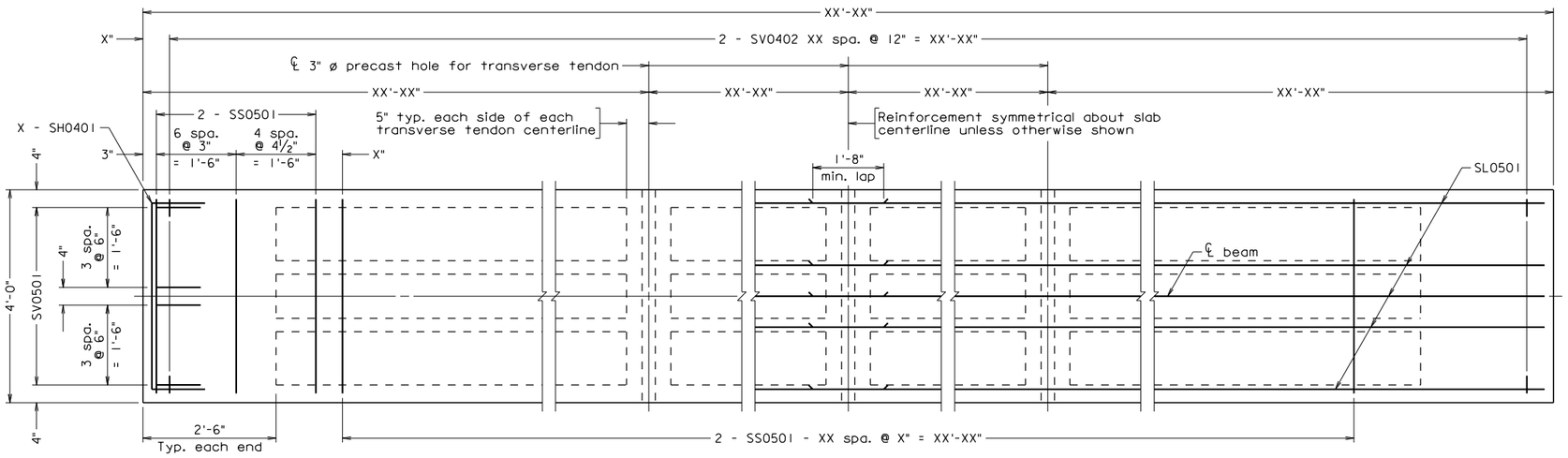


PLAN

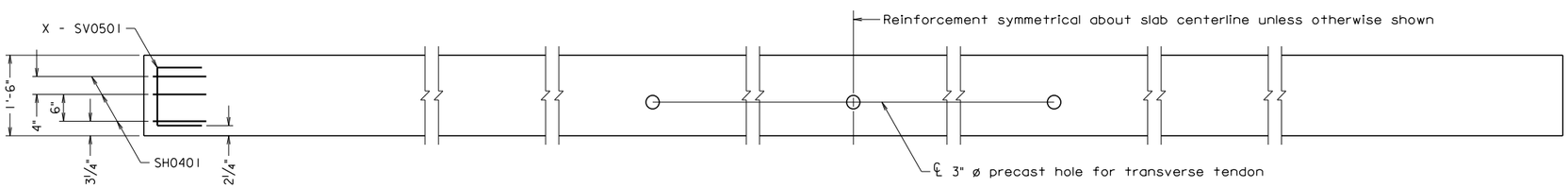


ELEVATION

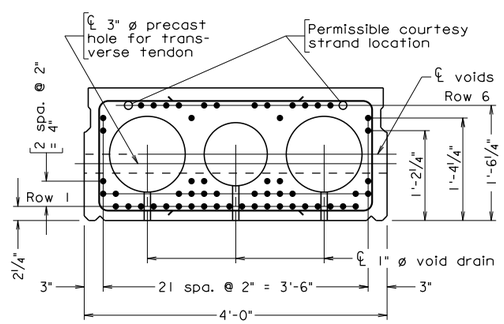


STRAND PATTERN

Scale: 1" = 1'-0"

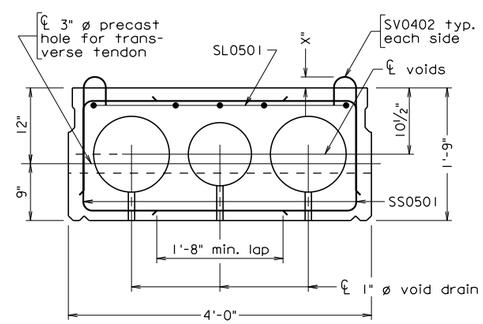


REINFORCING DETAILS

Scale: 1" = 1'-0"

Notes:

All reinforcing bars shall be Corrosion Resistant Reinforcing Steel, Class __.

SS series may be slighty shifted as directed by the Engineer to clear 3" ø hole for transverse tendon.

In lieu of splicing two reinforcing bars to form each stirrup, the stirrup may be made from one single bar.

The Contractor may submit an alternate prestressing strand pattern to the Engineer for approval.

The Contractor has the option of stressing two courtesy strands each to 8,000 lbs at the locations indicated.

Slab corners damaged during construction shall be restored to their shape as shown on the plans by an approved epoxy mortar.

Due to construction tolerances, adjustment to the bridge seat elevations may be needed. It is the Contractor's responsibility to make such adjustment as directed by the Engineer to insure the full bearing of the slab on all the pads.

## REINFORCING STEEL SCHEDULE

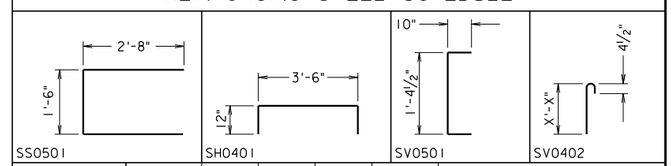


| Slab Size | Mark | No. | Size | Pin ø | Length | Location |
|---|---|---|---|---|---|---|
| 4'-0" x 21" Interior slab Type B | SH0401 | | #4 | 2" | | End horizontal |
| | SL0501 | | #5 | —— | | Top longitudinal |
| | SS0501 | | #5 | 2½" | | Stirrup |
| | SV0501 | | #5 | 2½" | | End vertical |
| | SV0402 | | #4 | 3" | | Composite vertical |
| | | | | | | |
| | | | | | | |

Dimensions in bending diagram are out-to-out of bars.

Number of bars shown in table are per slab per slab type.

## PRESTRESSING STEEL DATA TABLE

| Strand Type | Slab Size | No. of strands per row: Row 1 | Row 2 | Row 3 | Row 4 | Row 5 | Row 6 | Distance from bottom of slab: Row 1 in. | Row 2 in. | Row 3 in. | Row 4 in. | Row 5 in. | Row 6 in. | Total number of strands per slab | Prestressing force per strand lbs. | Net camber N in. |
|---|---|---|---|---|---|---|---|---|---|---|---|---|---|---|---|---|
| 0.6" ø Low Relaxation Strands | 4'-0" x 21" Type B | | | | | | | | | | | | | | | |
| | | | | | | | | | | | | | | | | |

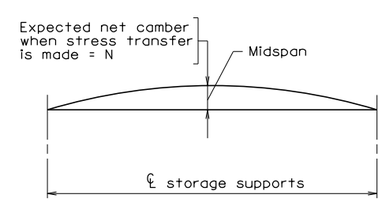


CAMBER DIAGRAM

Scale: ¾" = 1'-0" unless otherwise noted

©2016, Commonwealth of Virginia

| No. | Description | Date |
|---|---|---|
| | | |

Revisions

COMMONWEALTH OF VIRGINIA
DEPARTMENT OF TRANSPORTATION

STRUCTURE AND BRIDGE DIVISION

# INTERIOR SLAB TYPE B TRANSVERSE TENDONS

Designed: S&B DIV
Drawn: S&B DIV
Checked: S&B DIV

Date

Plan No. PST-4

Sheet No.

PST_4.dgn

12-28-2016

Sealed and Signed by:
Junyi Meng
Lic. No. 033572
On the date of
December 28, 2016

A copy of the original sealed and signed standard drawing is on file in the Central Office.

VDOT S&B DIVISION
RICHMOND, VA
STRUCTURAL ENGINEER

PST-4

**PRESTRESSED CONCRETE AJACENT MEMBER STANDARD**
**VOIDED SLABS – TRANSVERSE TENDONS**
**INTERIOR SLAB – TYPE B**

**NOTES TO DESIGNER:**

Include standard PST-1, PST-2A or -2B, PST-3 and PST-6A or -6B in the plans when using this standard. Include standard PST-5A in the plans when using F-shape parapet.

Cells for PLAN, ELEVATION, STRAND PATTERN AND REINFORCING DETAILS are provided for an interior 4'-0" x 21" voided slab. Replace with appropriate cells where other width or depth is used. Cells for completing the standard are located in the PSC_VS.CEL library.

All bar sizes, reinforcement spacing and strand positions provided in cells are input field holders and are to be adjusted as per design.

**ADD THE FOLLOWING NOTES, DIMENSIONS, DETAILS, ETC. TO STANDARD:**

PLAN:

Place appropriate PLAN from cell library. Adjust bar sizes and spacing per design.

Enter transverse tendon spacing. Cells detail tendons at quarter points for slabs constrained from lateral movement by wing haunches cast tight against the slabs. Remove tendon position at midspan for third points or both outside tendon positions for half point only. Add end tendon positions where slabs are not constrained from lateral movement. See Part 2, Section 12.05, of this manual for tendon requirements.

Where tendon positions are removed, show continuous void outlines.

Adjust end stirrup spacing as necessary and enter stirrup spacing throughout span.

Enter composite bar spacing or remove bars/dimensioning where composite bars are not used.

Remove SL series lap where not required.

For skews greater than 0 degrees, cells are not available and the PLAN shall be developed by the Designer to the actual skew.

ELEVATION:

Place appropriate ELEVATION from cell library. Adjust bar sizes and spacing per design.

Adjust tendon positions to match PLAN view.

STRAND PATTERN:

Remove strands from positions not used per design. Adjust or add strand spacing dimensioning as needed per design. Courtesy strand positions must be on 2" x 2" grid established by position of bottom strands.

**ADD THE FOLLOWING NOTES, DIMENSIONS, DETAILS, ETC. TO STANDARD (cont'd):**

REINFORCING DETAILS:

Adjust bar sizes per design. Remove composite bars where not used. Coordinate longitudinal bars with strand positions shown in STRAND PATTERN to ensure conflicts do not occur.

PRESTRESSING STEEL DATA TABLE:

Complete table. Ensure table content matches number and position of strands shown in STRAND PATTERN.

REINFORCING STEEL SCHEDULE:

Update schedule for specific section and skew. Verify all dimensions per design requirements and adjust where necessary. Where smaller size bar is adequate per design, adjust size and dimensions accordingly.

## REINFORCING STEEL SCHEDULE

| Slab size | Mark | Size | Dimension A | | | | Dimension B |
|---|---|---|---|---|---|---|---|
| | | | Skew angle | | | | |
| | | | 0° | over 0° to 15° | over 15° to 30° | over 30° to 45° | |
| 3'-0" x 15", x 18", x 21" | SH0401 | #4 | | | | | |
| 4'-0" x 15", x 18", x 21" | SH0401 | #4 | | | | | |
| All slab sizes | SL0501 | #5 | Depends on beam length / whether splice req.'d | | | | ------ |
| 3'-0" x 15" | SS0501 | #5 | | | | | |
| 3'-0" x 18" | SS0501 | #5 | | | | | |
| 3'-0" x 21" | SS0501 | #5 | | | | | |
| 4'-0" x 15" | SS0501 | #5 | | | | | |
| 4'-0" x 18" | SS0501 | #5 | | | | | |
| 4'-0" x 21" | SS0501 | #5 | | | | | |
| 3'-0" / 4'-0" x 15" | SV0501 | #5 | | | | | |
| 3'-0" / 4'-0" x 18" | SV0501 | #5 | | | | | |
| 3'-0" / 4'-0" x 21" | SV0501 | #5 | | | | | |
| All slab sizes | SV0402 | #4 | | | | | |

NOTES:

Complete corrosion resistant reinforcing steel note by adding the required Class. For additional information on corrosion resistant reinforcing steels (CRR), see Structure and Bridge Division Instructional and Informational Memorandum (current IIM-S&B-81).

| STATE | FEDERAL AID ROUTE | FEDERAL AID PROJECT | STATE ROUTE | STATE PROJECT | SHEET NO. |
|---|---|---|---|---|---|
| VA. | — | | | | |

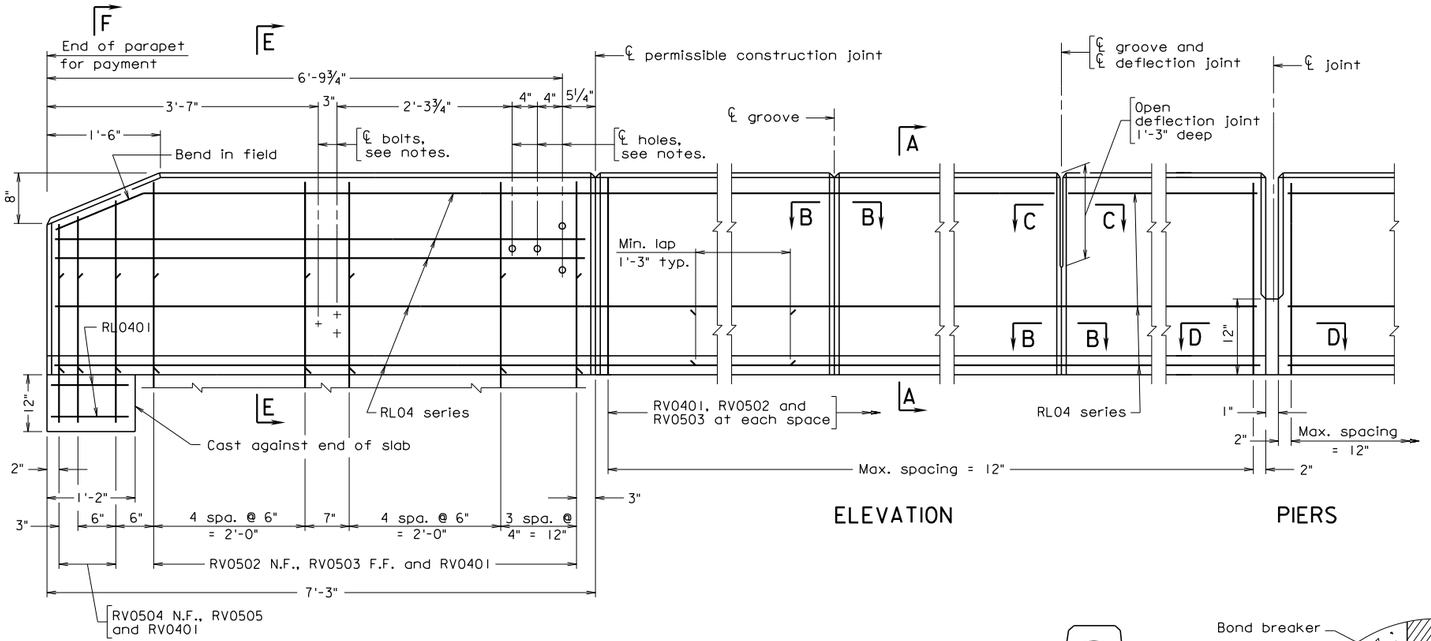


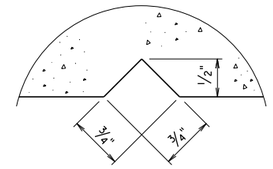


SECTION B-B
Full Scale
Groove detail for both sides of parapet.

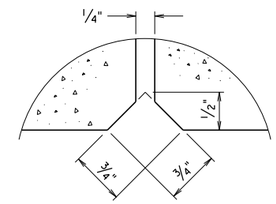


SECTION C-C
Full Scale
Deflection joint detail for both sides of parapet

Notes:

Rounded edges with 1" radius may be used in lieu of bevels along top of parapet.

All reinforcing bars shall be Corrosion Resistant Reinforcing Steel, Class __.

Spacing of grooves to be approximately 8'-0". Spacing of deflection joints shall not exceed three groove spaces.

Barrier delineator size, color, and spacing to be in accordance with the Specifications. Cost of delineator to be included in the price bid for parapet. Reflective surface of barrier delineator, in all instances, to be facing oncoming traffic.

The Contractor shall determine all dimensions and details necessary for installation.

All concrete shall be Class A4.

Terminal walls are detailed to take guardrail attachment GR-FOA-2.

Holes, where shown, shall be formed with sleeves of 1½" dia. nominal pipe.

Bolts, where shown, shall be ⅝" dia. expansion anchor bolts, 6" long to be drilled and installed when rub rail is attached.

Plan dimensions shown are measured in the respective horizontal and vertical planes. The reinforcing steel shown has been detailed based on a standard ¼" per foot cross slope and a 8½" slab depth. The Contractor shall adjust the reinforcing steel as required for other cross slopes and slab depths.

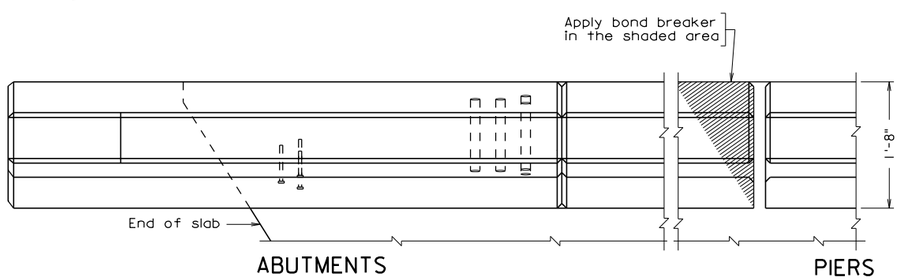


PART PLAN
TYPICAL FOR SKEWED CROSSING

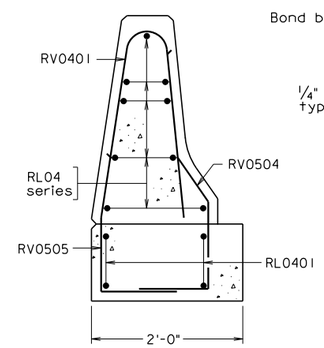


SECTION F-F
For details not shown, see Section A-A.

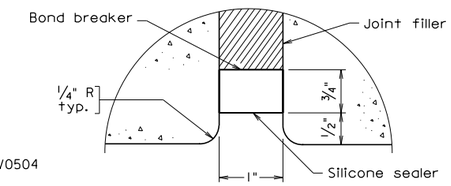


SECTION D-D
Full Scale
Joint detail for both sides of parapet

## REINFORCING STEEL SCHEDULE

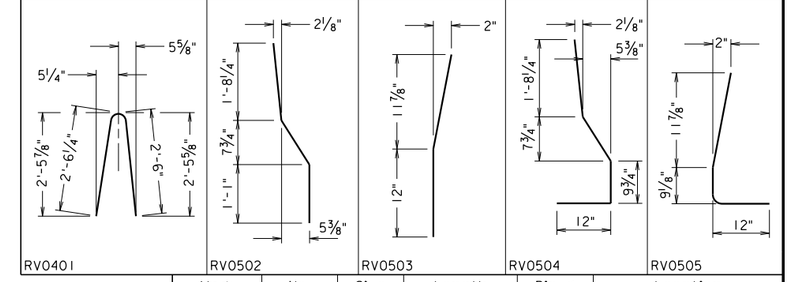


| Mark | No. | Size | Length | Pin ø | Location |
|---|---|---|---|---|---|
| RV0401 | · | #4 | 5'-2" | 4½" | Parapet |
| RV0502 | · | #5 | 3'-7" | 3¾" | Parapet |
| RV0503 | · | #5 | 2'-0" | 3¾" | Parapet |
| RV0504 | · | #5 | 4'-2" | 3¾" | Parapet |
| RV0505 | · | #5 | 2'-7" | 3¾" | Parapet |
| RL0401 | · | #4 | 1'-9" | — | Parapet |
| RL04 | · | #4 | · | — | Parapet |
| · | · | · | · | · | · |
| · | · | · | · | · | · |
| · | · | · | · | · | · |

Dimensions in bending diagram are out to out of bars, except as shown.

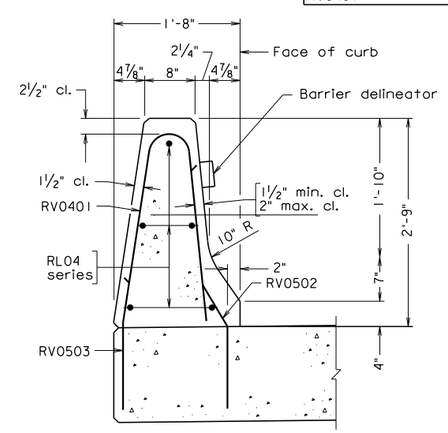


SECTION A-A

Gross concrete quantities (C.Y.) = Lin. ft. x 0.110 for all concrete above roadway slab.

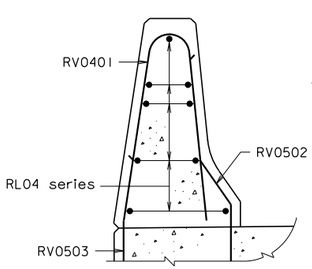


SECTION E-E
Holes and bolts not shown. For details not shown, see Section A-A.

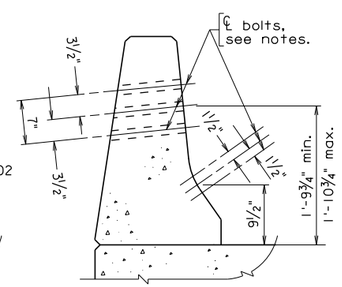


SECTION E-E
Reinforcing steel not shown

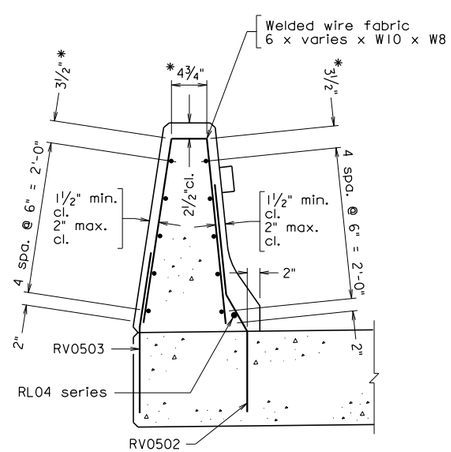


*Dimensions are out-to-out of wires.

SECTION A-A
ALTERNATE REINFORCING STEEL

Scale: 1" = 1'-0" unless otherwise noted

©2012, Commonwealth of Virginia

| No. | Description | Date |
|---|---|---|
| | | |
| | | |
| | | |
| | | |
| | | |
| | | |
| | | |

Revisions

COMMONWEALTH OF VIRGINIA
DEPARTMENT OF TRANSPORTATION

STRUCTURE AND BRIDGE DIVISION

# CAST-IN-PLACE CONCRETE PARAPET (F-SHAPE)

| Designed: ..... | Date | Plan No. | Sheet No. |
|---|---|---|---|
| Drawn: ..... | | PST-5A | |
| Checked: ..... | | | |

PST_5A.dgn

08-07-2012

Sealed and Signed by:
Julius F.J. Volgyi Jr.
Lic. No. 010487
On the date of
Aug. 7, 2012

A copy of the original sealed and signed standard drawing is on file in the Central Office.

VDOT S&B DIVISION
RICHMOND, VA
STRUCTURAL ENGINEER

PST-5A

**PRESTRESSED CONCRETE ADJACENT MEMBER STANDARD**
**VOIDED SLABS – TRANSVERSE TENDONS**
**CAST-IN-PLACE PARAPET (F-SHAPE)**

**NOTES TO DESIGNER:**

Standard is to be used as an insertable sheet when F-shape parapets are used.

Terminal wall is detailed on abutment.

If an initial bituminous overlay is used on the bridge at the time of construction, vertical dimensions and dimensions for reinforcing steel may need to be adjusted The vertical dimensions and dimensions for reinforcing steel shown on this standard are established from the top of the roadway surface for a 1" thick bituminous overlay at the face of parapet curb, $^{1}/_{4}$" per foot cross slope and a 15" slab depth.

If the thickness of the bituminous overlay at the face of parapet curb is greater than 1", vertical dimensions and dimensions for reinforcing steel will need to be adjusted. For example if a 2" overlay at the curb is set, the 4" curb dimension and the overall 2'-9" height of the parapet would need to be adjusted to 5" and 2'-10" respectively (Section A-A). In addition, the $9^{1}/_{2}$" and 1'-10" height of the bolts would need to be adjusted to $10^{1}/_{2}$" and 1'-11" respectively (Section E-E).

**ADD THE FOLLOWING NOTES, DIMENSIONS, DETAILS, ETC. TO STANDARD:**

SECTION A-A:

Modify vertical dimensions (4" curb and 2'-9" parapet height) as noted above if an initial overlay is used on bridge.

SECTION E-E:

Modify vertical dimensions ($9^{1}/_{2}$" curb and 1'-10" bolt locations) as noted above if an initial overlay is used on bridge.

REINFORCING STEEL SCHEDULE:

Modify bars if needed due to slab depth, cross slope or initial overlay if used on bridge.

NOTES:

Complete second note by adding the Class I, II or III of corrosion resistant reinforcing steel required. For additional information on corrosion resistant reinforcing steels (CRR), see Structure and Bridge Division Instructional and Informational Memorandum (current IIM-S&B-81).

| STATE | FEDERAL AID ROUTE | FEDERAL AID PROJECT | STATE ROUTE | STATE PROJECT | SHEET NO. |
|---|---|---|---|---|---|
| VA. | — | | | | |

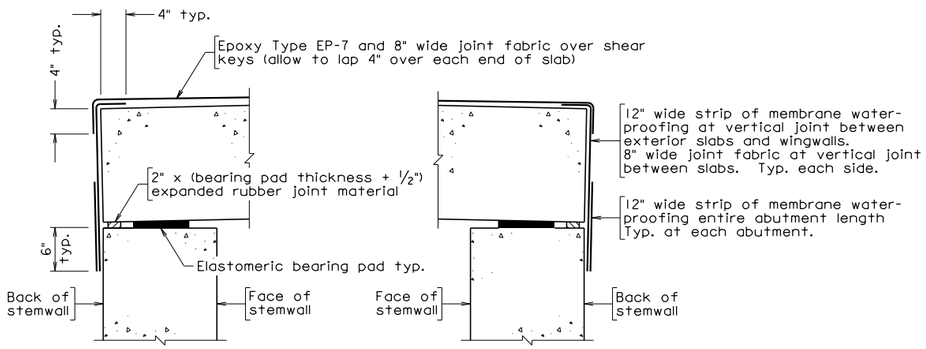


WATERPROOFING MEMBRANE DETAIL

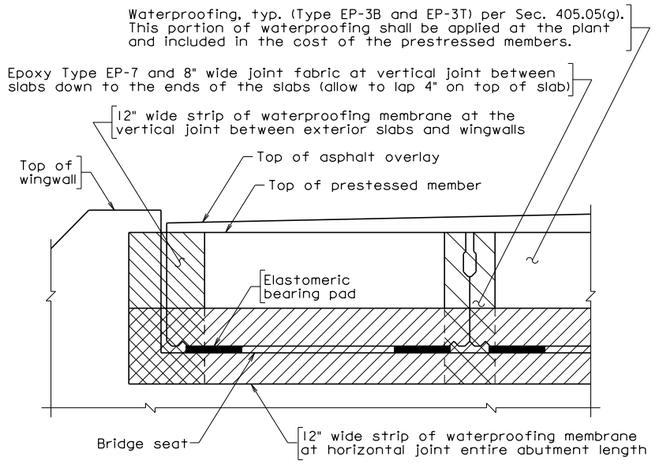


END OF SLAB VIEW AT ABUTMENTS

Notes:

Details shown for 4'-0" x 18" prestressed concrete voided slab. Details similar for other widths and depths.

Procedure for sealing shear keys and pier joint utilizing Epoxy EP-7 and joint fabric:

Surface preparation, application guidelines, Epoxy EP-7 and sand shall be in accordance with Section 431 of the 2016 Road and Bridge Specifications.

1. Prepare deck surface.

2. Apply a coat of epoxy to the slab ends at the shear keys and then set the joint fabric into the wet epoxy. Allow enough joint fabric to provide for a 4" min. lap on top of slabs. Apply additional epoxy over the joint fabric to thoroughly wet the joint fabric. Remove any air pockets under the joint fabric using a short nap paint roller.

3. Apply the first coat of epoxy to slab surface over the grouted shear keys and set the joint fabric (continuous over pier joints) into the wet epoxy. Allow enough joint fabric to provide for a 4" min. lap down the slab ends. Apply additional epoxy over the joint fabric to thoroughly wet the joint fabric and provide sufficient free epoxy to engage the sand. Remove any air pockets under the joint fabric using a short nap paint roller. Apply sand and allow epoxy and sand to cure and then remove loose sand.

4. Apply the first coat of epoxy and sand on the remaining deck surface including pier joint (areas between shear keys). Remove loose sand after epoxy has cured. This will complete the first coat of epoxy overlay.

5. Apply a second coat of epoxy over pier joint and set the joint fabric into the wet epoxy. Apply additional epoxy over the joint fabric to thoroughly wet the joint fabric and provide sufficient free epoxy to engage the sand. Remove any air pockets under the joint fabric using a short nap paint roller. Apply sand and allow epoxy and sand to cure and then remove loose sand.

6. Apply second coat of epoxy and sand, covering remaining surface of deck including shear keys. Remove loose sand after the epoxy has cured.

7. Any epoxy spills outside the limits of the shear key treatment shall be covered with sand while the epoxy is still wet.

The cost of Epoxy Type EP-7, sand and joint fabric shall be included in the cost of the prestressed members.

Joint fabric from the VDOT Special Products Evaluation List under Joint Fabrics shall be used.

Notes for End of Slab Membrane Waterproofing:

The membrane shall be applied to the end of slabs at abutments at the vertical joint between exterior slabs and wingwalls and the horizontal joint as shown in END OF SLAB VIEW AT ABUTMENTS.

The membrane shall consist of a Type III preformed membrane system in accordance with Section 429 of the 2016 Road and Bridge Specifications. The cost of the membrane shall be included in the cost of the prestressed members.

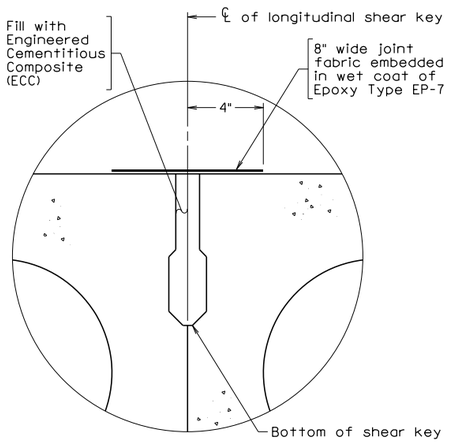


SHEAR KEY DETAIL
Overlay not shown
Scale: 3" = 1'-0"

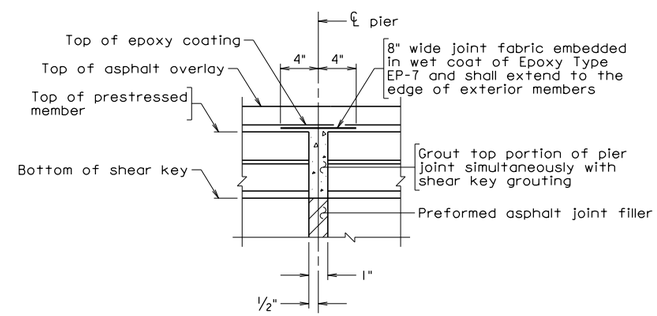


SECTION THRU PIER JOINTS
Typical all pier joints
Normal to joint
Not to scale

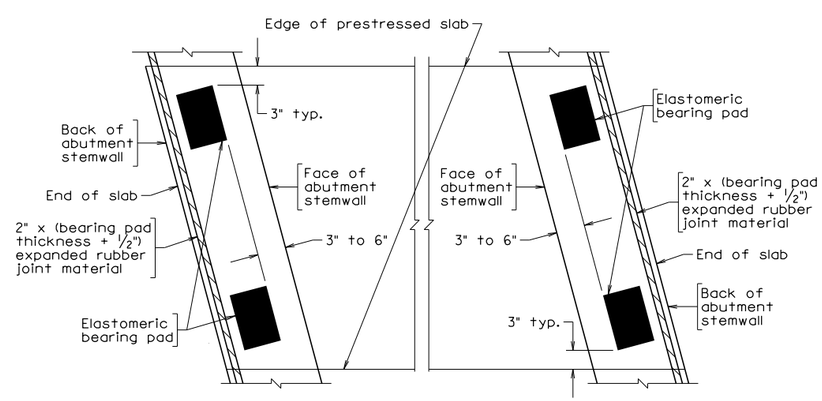


PART PLAN AT ABUTMENT A PART PLAN AT ABUTMENT B

END BEARING DETAILS

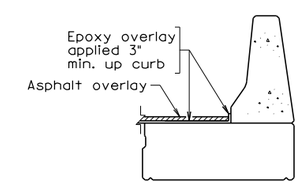


SECTION THRU PARAPET
Scale: 1/2" = 1'-0"

Scale: 1" = 1'-0" unless otherwise shown

©2016, Commonwealth of Virginia

PST_6A.dgn

12-28-2016

PST-6A

Sealed and Signed by:
Junyi Meng
Lic. No. 033572
On the date of
December 28, 2016

A copy of the original sealed and signed standard drawing is on file in the Central Office.

VDOT S&B DIVISION
RICHMOND, VA
STRUCTURAL ENGINEER

| No. | Description | Date |
|---|---|---|
| | Revisions | |

COMMONWEALTH OF VIRGINIA
DEPARTMENT OF TRANSPORTATION

STRUCTURE AND BRIDGE DIVISION

# END BEARING AND WATERPROOFING DETAILS FOR ASPHALT OVERLAY

Designed: S&B DIV
Drawn: S&B DIV
Checked: S&B DIV

Date

Plan No. PST-6A

Sheet No.

**PRESTRESSED CONCRETE ADJACENT MEMBER STANDARD**
**VOIDED SLABS – TRANSVERSE TENDON**
**WATERPROOFING DETAILS FOR ASPHALT OVERLAY**

**NOTES TO DESIGNER:**

Include standard PST-1, PST-2A, PST-3 and PST-4 in the plans when using this standard.

Include standard PST-5A in the plans when using F-shape parapet.

Details are shown for 4'-0" x 18" prestressed concrete voided slabs. Details are similar for other widths and depths and alterations are not necessary unless indicated below. Remove scales from details and indicate sheet is Not to Scale at bottom when other widths and depths are used. Scales are shown on the standard sheet to assist Designers when detail changes are necessary.

Cells for completing the standard are located in the PSC_VS.CEL library.

**ADD THE FOLLOWING NOTES, DIMENSIONS, DETAILS, ETC. TO STANDARD:**

WATERPROOFING MEMBRANE DETAIL:

Modify abutment or bearing details as necessary.

END OF SLAB VIEW AT ABUTMENTS:

Modify details when necessary to convey waterproofing membrane limits due to abutment details.

SECTION THRU PIER JOINTS:

Do not remove detail for bridges without piers. Modify the detail when sleeves through the beam ends for anchor bolts are used at fixed bearing locations.

SECTION THRU PARAPET:

Replace with parapet or other rail as needed.

END BEARING DETAILS:

Modify details as necessary where laminated elastomeric bearings are used to account for grade, skew or longer expansion lengths. Where grades exceed 1 percent and laminated elastomeric bearings are not used, add cell for SLABS ON GRADIENT IN EXCESS OF 1% to standards PST -3 and -4.

NOTES:

Do not alter procedure for bridges without piers.

| STATE | FEDERAL AID ROUTE | FEDERAL AID PROJECT | STATE ROUTE | STATE PROJECT | SHEET NO. |
|---|---|---|---|---|---|
| VA. | — | | | | |

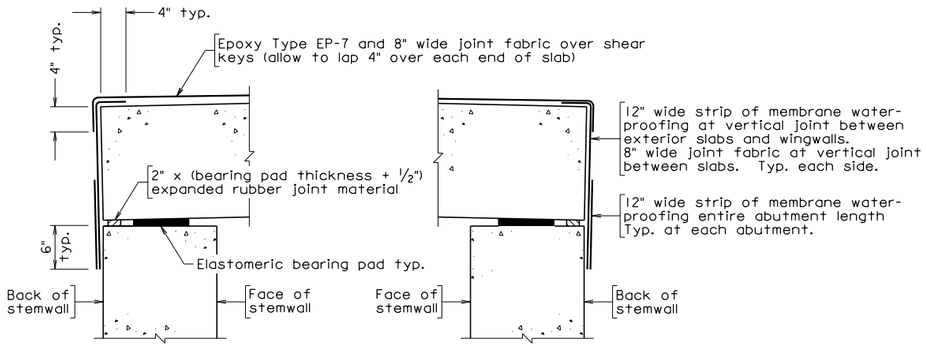


ABUTMENT A ABUTMENT B

## WATERPROOFING MEMBRANE DETAIL

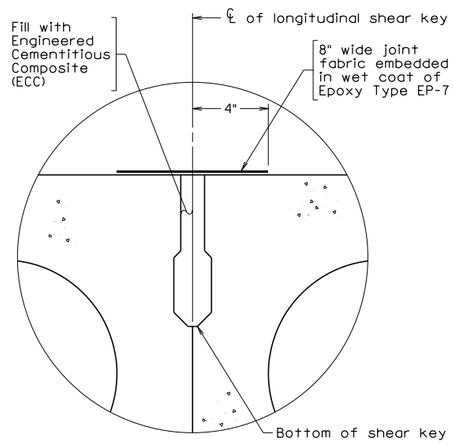


## SHEAR KEY DETAIL

Overlay not shown
Scale: 3" = 1'-0"

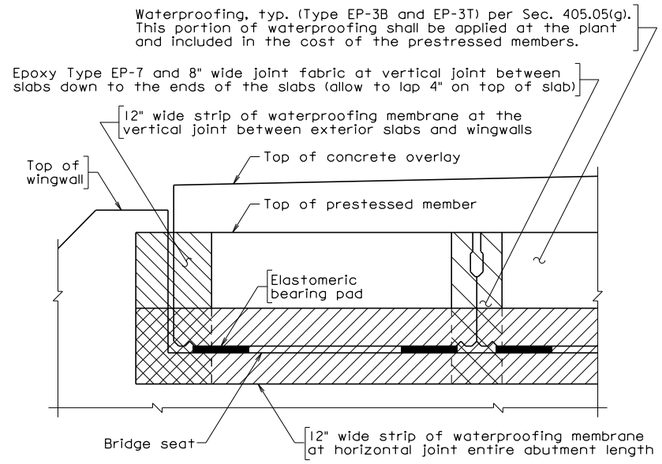


## END OF SLAB VIEW AT ABUTMENTS

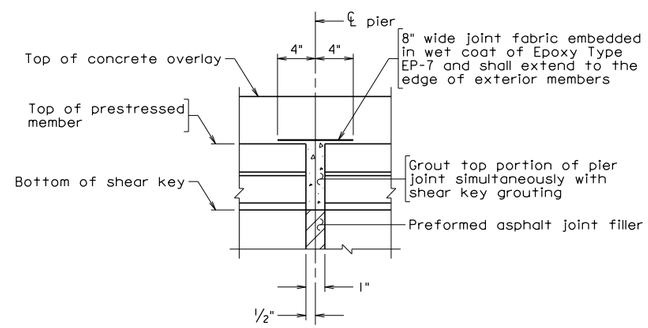


## SECTION THRU PIER JOINTS

Typical all pier joints
Normal to joint
Not to Scale

Notes:

Details shown for 4'-0" x 18" prestressed concrete voided slab. Details similar for other widths and depths.

Procedure for sealing shear keys and pier joint utilizing Epoxy EP-7 and joint fabric:

Surface preparation, application guidelines, Epoxy EP-7 and sand shall be in accordance with Section 431 of the 2016 Road and Bridge Specifications.

1. Prepare deck surface.

2. Apply a coat of epoxy to the slab ends at the shear keys and then set the joint fabric into the wet epoxy. Allow enough joint fabric to provide for a 4" min. lap on top of slabs. Apply additional epoxy over the joint fabric to thoroughly wet the joint fabric. Remove any air pockets under the joint fabric using a short nap paint roller.

3. Apply the first coat of epoxy to slab surface over the grouted shear keys and set the joint fabric (continuous over pier joints) into the wet epoxy. Allow enough joint fabric to provide for a 4" min. lap down the slab ends. Apply additional epoxy over the joint fabric to thoroughly wet the joint fabric and provide sufficient free epoxy to engage the sand. Remove any air pockets under the joint fabric using a short nap paint roller. Apply sand and allow epoxy and sand to cure and then remove loose sand.

4. Apply the first coat of epoxy over pier joint and set the joint fabric into the wet epoxy. Apply additional epoxy over the joint fabric to thoroughly wet the joint fabric and provide sufficient free epoxy to engage the sand. Remove any air pockets under the joint fabric using a short nap paint roller. Apply sand and allow epoxy and sand to cure and then remove loose sand.

5. Apply a second coat of epoxy and sand over shear keys and pier joint. Remove loose sand after epoxy has cured.

6. Any epoxy spills outside the limits of the shear key treatment shall be covered with sand while the epoxy is still wet.

The cost of Epoxy Type EP-7, sand and joint fabric shall be included in the cost of the prestressed members.

Joint fabric from the VDOT Special Products Evaluation List under Joint Fabrics shall be used.

Notes for End of Slab Membrane Waterproofing:

The membrane shall be applied to the end of slabs at abutments at the vertical joint between exterior slabs and wingwalls and the horizontal joint as shown in END OF SLAB VIEW AT ABUTMENTS.

The membrane shall consist of a Type III preformed membrane system in accordance with Section 429 of the 2016 Road and Bridge Specifications. The cost of the membrane shall be included in the cost of the prestressed members.

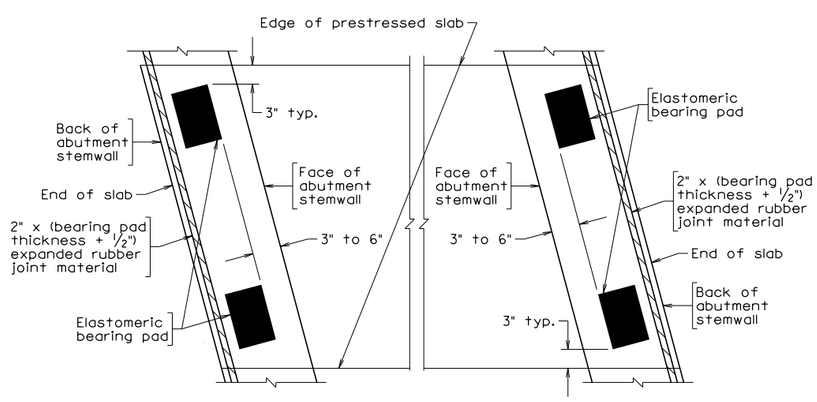


PART PLAN AT ABUTMENT A PART PLAN AT ABUTMENT B

## END BEARING DETAILS

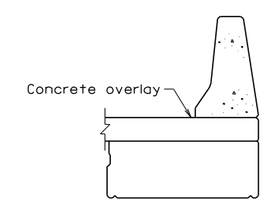


## SECTION THRU PARAPET

Scale: 1/2" = 1'-0"

Scale: 1" = 1'-0" unless otherwise shown

©2016, Commonwealth of Virginia

PST_6B.dgn

12-28-2016

PST-6B

Sealed and Signed by:
Junyi Meng
Lic. No. 033572
On the date of
December 28, 2016

A copy of the original sealed and signed standard drawing is on file in the Central Office.

VDOT S&B DIVISION
RICHMOND, VA
STRUCTURAL ENGINEER

| No. | Description | Date |
|---|---|---|
| | Revisions | |

COMMONWEALTH OF VIRGINIA
DEPARTMENT OF TRANSPORTATION

STRUCTURE AND BRIDGE DIVISION

# END BEARING AND WATERPROOFING DETAILS FOR CONCRETE OVERLAY

| Designed: S&B DIV | Date | Plan No. | Sheet No. |
|---|---|---|---|
| Drawn: S&B DIV | | PST-6B | |
| Checked: S&B DIV | | | |

**PRESTRESSED CONCRETE ADJACENT MEMBER STANDARD**
**VOIDED SLABS – TRANSVERSE TENDON**
**WATERPROOFING DETAILS FOR CONCRETE OVERLAY**

**NOTES TO DESIGNER:**

Include standard PST-1, PST-2B, PST-3 and PST-4 in the plans when using this standard.

Include standard PST-5A in the plans when using F-shape parapet.

Details are shown for 4'-0" x 18" prestressed concrete voided slabs. Details are similar for other widths and depths and alterations are not necessary unless indicated below. Remove scales from details and indicate sheet is Not to Scale at bottom when other widths and depths are used. Scales are shown on the standard sheet to assist Designers when detail changes are necessary.

Cells for completing the standard are located in the PSC_VS.CEL library.

**ADD THE FOLLOWING NOTES, DIMENSIONS, DETAILS, ETC. TO STANDARD:**

WATERPROOFING MEMBRANE DETAIL:

Modify abutment or bearing details as necessary.

END OF SLAB VIEW AT ABUTMENTS:

Modify details when necessary to convey waterproofing membrane limits due to abutment details.

SECTION THRU PIER JOINTS:

Do not remove detail for bridges without piers. Modify the detail when sleeves through the beam ends for anchor bolts are used at fixed bearing locations.

SECTION THRU PARAPET:

Replace with parapet or other rail as needed.

END BEARING DETAILS:

Modify details as necessary where laminated elastomeric bearings are used to account for grade, skew or longer expansion lengths. Where grades exceed 1 percent and laminated elastomeric bearings are not used, add cell for SLABS ON GRADIENT IN EXCESS OF 1% to standards PST -3 and -4.

NOTES:

Do not alter procedure for bridges without piers.

| STATE | FEDERAL AID ROUTE | FEDERAL AID PROJECT | STATE ROUTE | STATE PROJECT | SHEET NO. |
|---|---|---|---|---|---|
| VA. | — | | | | |

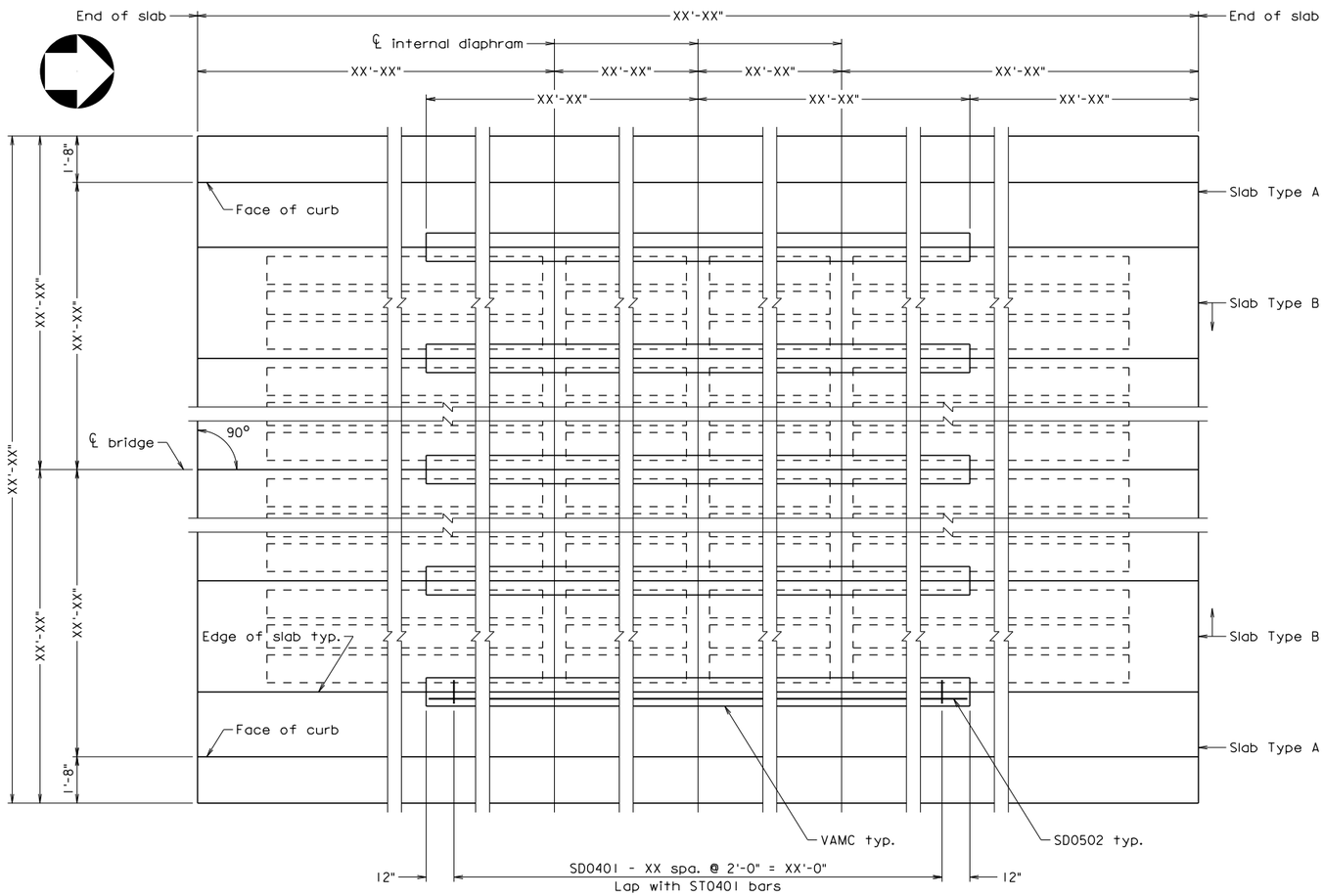


## ERECTION DIAGRAM

Shear key limits not shown for clarity

Notes:

SD0401 and SD0502 bars are included in the Reinforcing Steel Schedule for Superstructure.

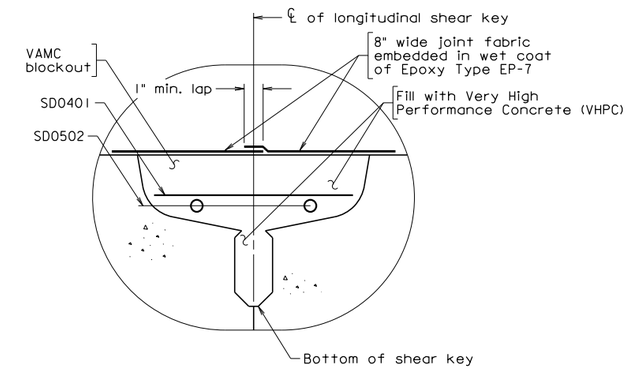


## VIRGINIA ADJACENT MEMBER CONNECTION (VAMC) DETAIL

Overlay not shown.
One strip required for shear key waterproofing beyond VAMC.
Scale: 3" = 1'-0"

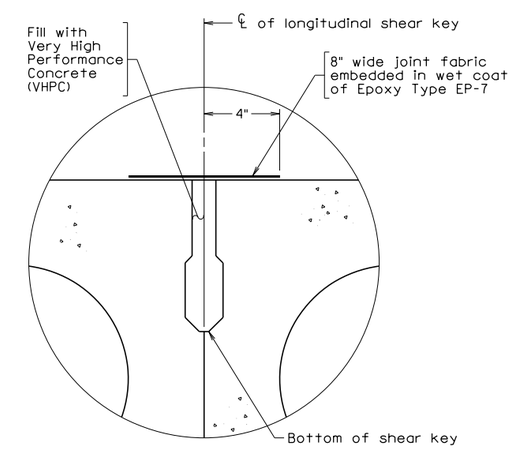


## SHEAR KEY DETAIL

Overlay not shown
Scale: 3" = 1'-0"

PSV_1.dgn

12-28-2016

PSV-1

Sealed and Signed by:
Junyi Meng
Lic. No. 033572
On the date of
December 28, 2016

A copy of the original sealed and signed standard drawing is on file in the Central Office.

VDOT S&B DIVISION
RICHMOND, VA
STRUCTURAL ENGINEER

| No. | Description | Date |
|---|---|---|
| | | |
| | | |
| | | |
| | | |
| | | |
| | | |
| | | |

Revisions

COMMONWEALTH OF VIRGINIA
DEPARTMENT OF TRANSPORTATION

STRUCTURE AND BRIDGE DIVISION

ERECTION DIAGRAM

| Designed: S&B DIV | Date | Plan No. | Sheet No. |
|---|---|---|---|
| Drawn: S&B DIV | | PSV-1 | |
| Checked: S&B DIV | | | |

Scale: 3/8" = 1'-0" unless otherwise noted

©2016, Commonwealth of Virginia

**NOTES TO DESIGNER:**

Include standard PSV-2A or -2B, PSV-3, PSV-4 and PSV-6A or -6B in the plans when using this standard. Include standard PSV-5A in the plans when using F-shape parapet.

The default ERECTION DIAGRAM cell provided is for single span 4'-0" wide voided slabs on 0 degree skew where an edge of slab falls on the bridge centerline for slabs constrained from lateral movement by wing haunches cast tight against the slabs. F-shape parapet is shown with the back of parapet aligning with the exterior edge of slab.

Cells for completing the standard are located in the PSC_VS.CEL library.

The available ERECTION DIAGRAM cells are generic and may require modification or complete replacement as indicated below.

**ADD THE FOLLOWING NOTES, DIMENSIONS, DETAILS, ETC. TO STANDARD:**

ERECTION DIAGRAM:

Replace with appropriate cell where 3'-0" voided slabs are used, skew is other than 0 degrees or centerline of bridge falls within slab width.

Transverse tendons are not required using VAMC details, but solid sections (breaks in voids serving as interior diaphragms) are required at the same intervals. Cells detail solid sections at quarter points. Remove solid section at midspan for third points or both outside solid sections for half point only. Where solid sections are removed, remove void breaks to show continuous void outlines. See Part 2, Section 12.05, of this manual for interior diaphragm requirements.

Enter slab length, bridge width, distances to bridge centerline and distances to faces of curb/rail.

Where F-shape parapet is not used or the back of parapet/rail does not align with the exterior edge of slab, adjust details to show actual barrier width and position.

Enter lengths and distance from end of slab for the VAMC blockouts. The overall longitudinal VAMC blockout dimension is to extend between 0.25 and 0.75 of the span rounded up to an even 6-foot interval. This will allow the use of reusable standard forms for the blockouts with slits to accommodate the ST0401 bars.

Orient North Arrow to correct direction.

For skews greater than 10 degrees, cells are not available and the ERECTION DIAGRAM shall be developed by the Designer to the actual skew. See Part 2, File No. 12.05-13 for sample sheet showing example details required.

**ADD THE FOLLOWING NOTES, DIMENSIONS, DETAILS, ETC. TO STANDARD (cont'd):**

ERECTION DIAGRAM (continued):

For multiple spans, the ERECTION DIAGRAM shall be developed by the Designer to provide the necessary details for the complete structure. Where a reduced scale is necessary, show the overall outer limits of the voids. Where reduced scale is such that showing overall outer limits of the voids reduces detail clarity, remove completely.

For stage construction, temporary barrier is typically necessary requiring an additional member type and the ERECTION DIAGRAM shall be developed by the Designer to provide the required details. See Part 2, File No. 12.05-13 for sample sheet showing example details required. An additional interior slab sheet will be necessary and can be developed by providing an additional PSV-4 standard sheet in the plan set and modifying to provide the Type C details.

NOTES:

Enter sheet numbers for references to specific details.

| STATE | FEDERAL AID ROUTE | FEDERAL AID PROJECT | STATE ROUTE | STATE PROJECT | SHEET NO. |
|---|---|---|---|---|---|
| VA. | — | | | | |

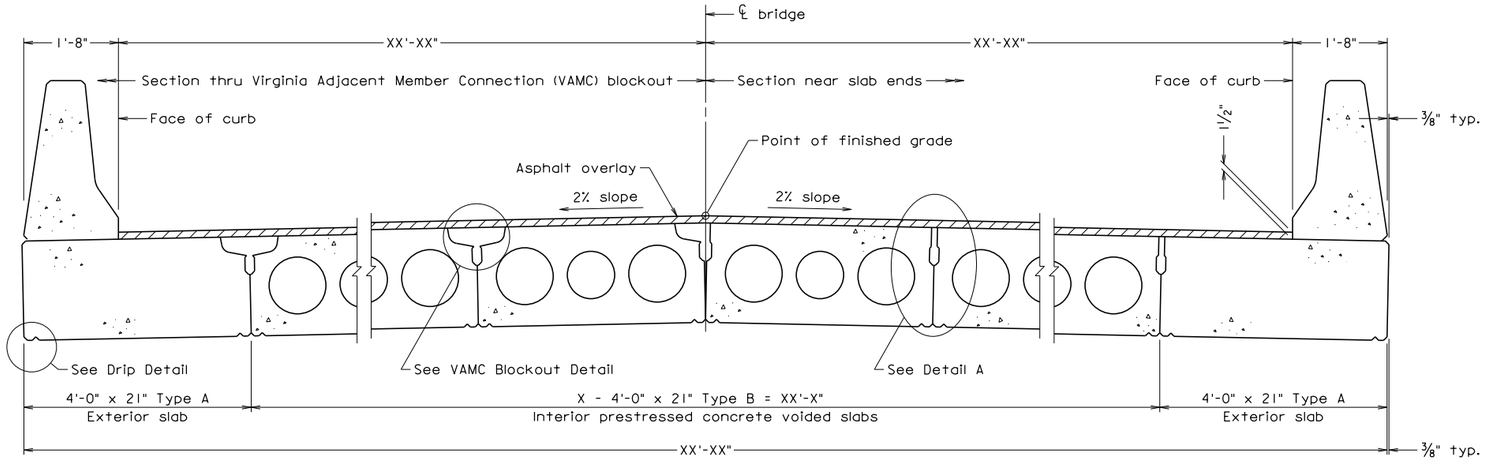


## TRANSVERSE SECTION

NOTES:

The bridge and roadway widths shown are nominal. Actual widths may vary due to fabrication and construction (gaps between slabs) tolerances.

Asphalt concrete overlay shall be Type SM-12.5D. Payment for the entire overlay shall be made at the unit price for asphalt concrete Type SM-2C.

Very High Performance Concrete shall be furnished and placed in accordance with the current VDOT Special Provision for Very High Performance Concrete (VHPC). The cost of the VHPC shall be included in the cost of the prestressed concrete members.

All keyway surfaces shall be cleaned of all dirt, laitance and loose aggregate by means of sandblasting and pre-wetted prior to the grouting of shear keys.

All grouting of shear keys and VAMC blockouts with VHPC shall be done in one continuous operation without interruption for each span. Care shall be taken to prevent leakage of VHPC into precast holes for transverse tendons or from bottoms of shear keys.

Casting of parapets shall not be done until all grouting of keys are completed and the VHPC has reached a minimum strength of 4000 psi.

Entire deck shall be waterproofed in accordance with the requirements of Section 405 and Section 416 of the Specifications. For waterproofing details, see sheet __.

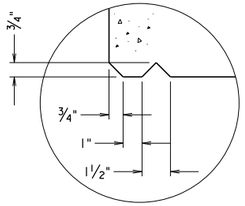


## DRIP DETAIL

Typ. each side of each member

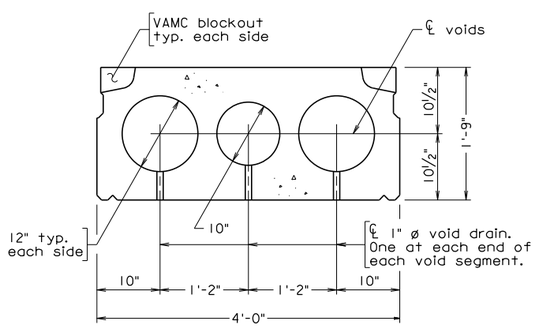


## TYPICAL INTERIOR SECTION TYPE B

Scale: 1" = 1'-0"

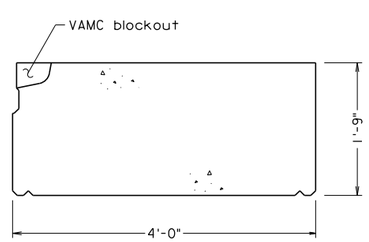


## TYPICAL EXTERIOR SECTION TYPE A

Scale: 1" = 1'-0"

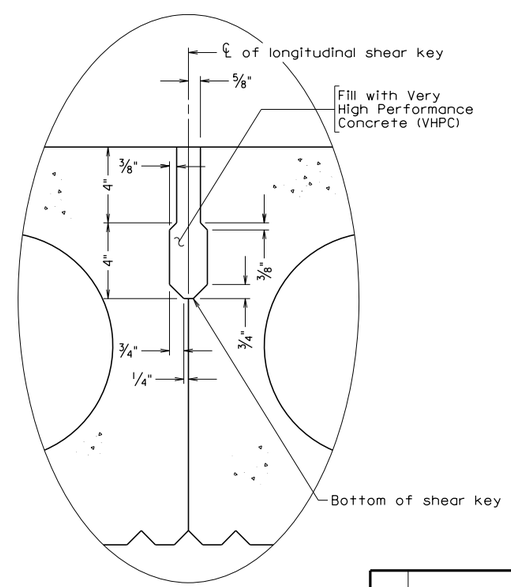


## DETAIL A

Overlay not shown

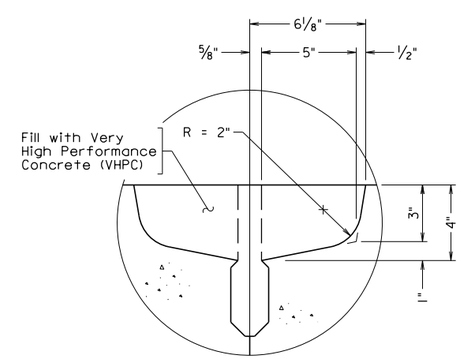


## VAMC BLOCKOUT DETAIL

Overlay not shown
All blockout dimensions typ. each side
Scale: 3" = 1'-0"

Scale: ¾" = 1'-0" unless otherwise noted

©2016, Commonwealth of Virginia

| No. | Description | Date |
|---|---|---|
| | | |

Revisions

COMMONWEALTH OF VIRGINIA
DEPARTMENT OF TRANSPORTATION

STRUCTURE AND BRIDGE DIVISION

# TRANSVERSE AND TYPICAL SECTIONS; ASPHALT OVERLAY

| Designed: S&B DIV | Date | Plan No. | Sheet No. |
|---|---|---|---|
| Drawn: S&B DIV | | PSV-2A | |
| Checked: S&B DIV | | | |

PSV-2A.dgn

12-28-2016

Sealed and Signed by:
Junyi Meng
Lic. No. 033572
On the date of
December 28, 2016

A copy of the original sealed and signed standard drawing is on file in the Central Office.

VDOT S&B DIVISION
RICHMOND, VA
STRUCTURAL ENGINEER

PSV-2A

**NOTES TO DESIGNER:**

Include standard PSV-1, PSV-3, PSV-4 and PSV-6A in the plans when using this standard. Include standard PSV-5A in the plans when using F-shape parapet.

The designer shall ensure that the width of the pier cap or the seat of the abutment is sufficient for locating the anchor bolts.

The designer should avoid whenever possible the mixing of 3'-0" and 4'-0" wide slab sections.

For exterior slabs, use solid slab sections to avoid conflicts and problems with reinforcing steel for SOME parapets/railings (e.g. F-shape).

The default cells provided on the sheet are for 4'-0" x 21" voided slabs. Transverse Section is shown for slabs sloped to bridge crown, edge of slab falls on the bridge centerline and back of F-shape parapet aligned with the exterior edge of slab.

Cells for completing the standard are located in the PSC_VS.CEL library.

**ADD THE FOLLOWING NOTES, DIMENSIONS, DETAILS, ETC. TO STANDARD:**

TRANSVERSE SECTION:

Enter dimensions from face of curb/rail to bridge centerline. Enter number of interior sections and total length of interior sections. Enter total width.

Modify F-shaped parapet position when not aligned with the edge of the exterior slab. Replace with sidewalk, rail, etc. as needed.

Replace with appropriate cell for other depths/widths and where slabs are level.

For stage construction, the Transverse Section shall be developed by the Designer. The Transverse Section may need to be drawn full width to properly show and dimension the location of the temporary barrier and a reduced scale may be necessary. An additional interior slab sheet is required and can be developed by providing an additional PSV-4 standard sheet in the plan set and modifying to provide the Type C details.

TYPICAL INTERIOR SECTION and TYPICAL EXTERIOR SECTION:

Where 4'-0" x 21" sections are not used, replace with appropriate sections from cell library. For stage construction, add Type C Section.

DETAIL A:

Where 21" deep section is not used, replace with appropriate depth detail from cell library.

| STATE | FEDERAL AID ROUTE | FEDERAL AID PROJECT | STATE ROUTE | STATE PROJECT | SHEET NO. |
|---|---|---|---|---|---|
| VA. | — | | | | |

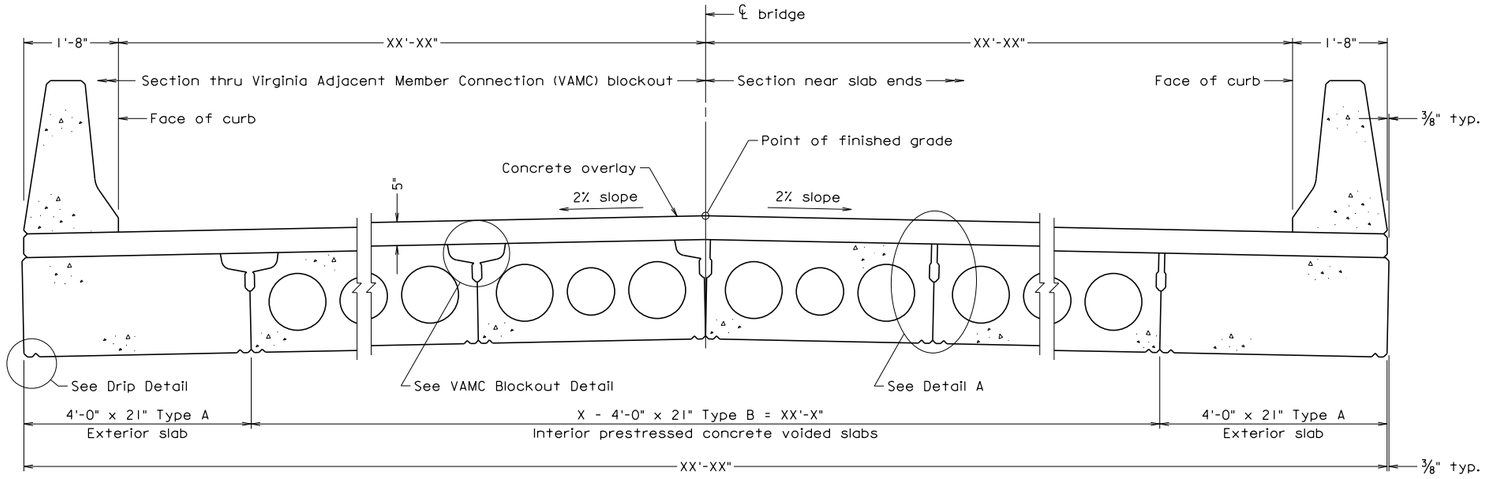


## TRANSVERSE SECTION

NOTES:

The bridge and roadway widths shown are nominal. Actual widths may vary due to fabrication and construction (gaps between slabs) tolerances.

Concrete for the overlay shall be Low Shrinkage Class A4 Modified having a minimum 28 day compressive strength of 4000 psi. Payment for the concrete overlay shall be made at the unit price for Concrete Class A4.

All reinforcing bars shall be Corrosion Resistant Reinforcing steel, Class __.

Top surfaces of all slabs shall be a clean concrete surface, free of laitance, with surface intentionally roughened to an amplitude of 1/4".

Very High Performance Concrete shall be furnished and placed in accordance with the current VDOT Special Provision for Very High Performance Concrete (VHPC). The cost of the VHPC shall be included in the cost of the prestressed concrete members.

All keyway surfaces shall be cleaned of all dirt, laitance and loose aggregate by means of sandblasting and pre-wetted prior to the grouting of shear keys.

All grouting of shear keys and VAMC blockouts with VHPC shall be done in one continuous operation without interruption for each span. Care shall be taken to prevent leakage of VHPC into precast holes for transverse tendons or from bottoms of shear keys.

Casting of parapets shall not be done until all grouting of keys are completed and the VHPC has reached a minimum strength of 4000 psi.

For waterproofing details, see sheet __.

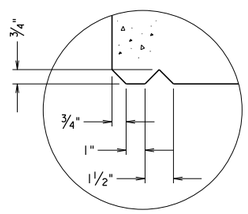


## DRIP DETAIL

Typ. each side of each member

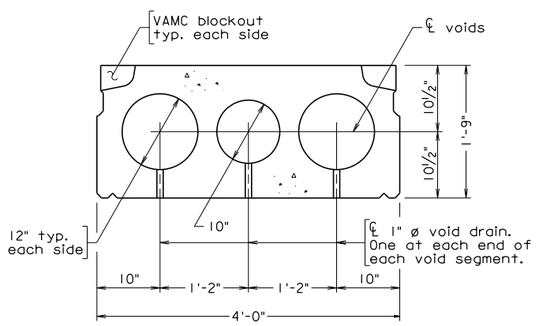


## TYPICAL INTERIOR SECTION TYPE B

Scale: 1" = 1'-0"

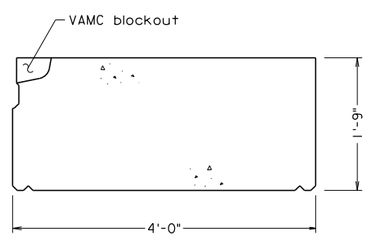


## TYPICAL EXTERIOR SECTION TYPE A

Scale: 1" = 1'-0"

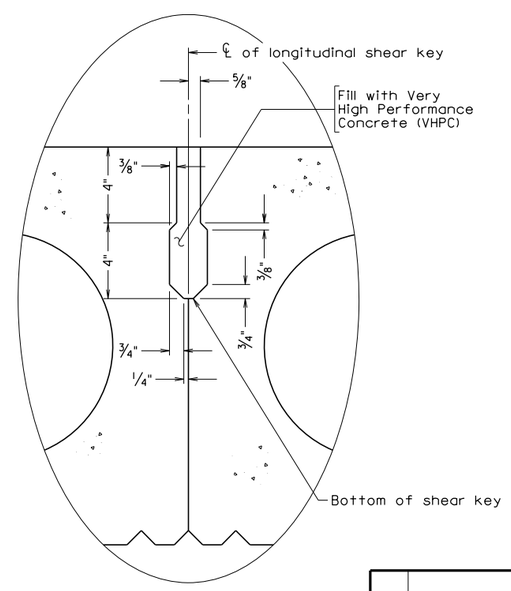


## DETAIL A

Overlay not shown

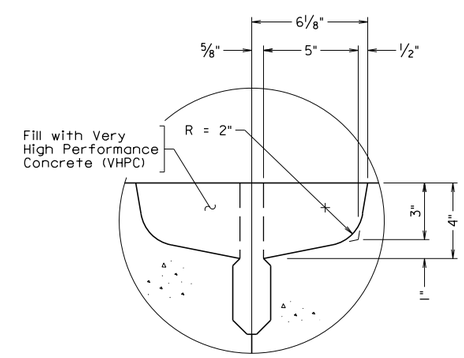


## VAMC BLOCKOUT DETAIL

Overlay not shown
All blockout dimensions typ. each side
Scale: 3" = 1'-0"

Scale: 3/4" = 1'-0" unless otherwise noted

©2016, Commonwealth of Virginia

| No. | Description | Date |
|---|---|---|
| | | |

Revisions

COMMONWEALTH OF VIRGINIA
DEPARTMENT OF TRANSPORTATION

STRUCTURE AND BRIDGE DIVISION

# TRANSVERSE AND TYPICAL SECTIONS; CONCRETE OVERLAY

Designed: S&B DIV
Drawn: S&B DIV
Checked: S&B DIV

Date

Plan No. PSV-2B

Sheet No.

PSV-2B.dgn

12-28-2016

Sealed and Signed by:
Junyi Meng
Lic. No. 033572
On the date of
December 28, 2016

A copy of the original sealed and signed standard drawing is on file in the Central Office.

VDOT S&B DIVISION
RICHMOND, VA
STRUCTURAL ENGINEER

PSV-2B

## NOTES TO DESIGNER:

Include standard PSV-1, PSV-3, PSV-4 and PSV-6B in the plans when using this standard. Include standard PSV-5A in the plans when using F-shape parapet.

The designer shall ensure that the width of the pier cap or the seat of the abutment is sufficient for locating the anchor bolts.

The designer should avoid whenever possible the mixing of 3'-0" and 4'-0" wide slab sections.

For exterior slabs, use solid slab sections to avoid conflicts and problems with reinforcing steel for some parapets/railings (e.g., F-shape).

The default cells provided on the sheet are for 4'-0" x 21" voided slabs. Transverse Section is shown for slabs sloped to bridge crown, edge of slab falls on the bridge centerline and back of F-shape parapet aligned with the exterior edge of slab.

Cells for completing the standard are located in the PSC_VS.CEL library.

## ADD THE FOLLOWING NOTES, DIMENSIONS, DETAILS, ETC. TO STANDARD:

TRANSVERSE SECTION:

Enter dimensions from face of curb/rail to bridge centerline. Enter number of interior sections and total length of interior sections. Enter total width. Modify concrete overlay thickness where 7 ½" is used.

Modify F-shaped parapet position when not aligned with the edge of the exterior slab. Replace with sidewalk, rail, etc. as needed.

Where scale allows, detail the reinforcing steel bars in the concrete overlay. Where scale is not sufficient, add Part Detail on this sheet or provide on separate sheet with Deck Plan. See Part 2, File No. 12.05-2 for minimum reinforcement requirements.

Replace with appropriate cell for other depths/widths and where slabs are level.

For stage construction, the Transverse Section shall be developed by the Designer. The Transverse Section may need to be drawn full width to properly show and dimension the location of the temporary barrier and a reduced scale may be necessary. An additional interior slab sheet is required and can be developed by providing an additional PSV-4 standard sheet in the plan set and modifying to provide the Type C details.

TYPICAL INTERIOR SECTION and TYPICAL EXTERIOR SECTION:

Where 4'-0" x 21" sections are not used, replace with appropriate sections from cell library. For stage construction, add Type C Section.

**ADD THE FOLLOWING NOTES, DIMENSIONS, DETAILS, ETC. TO STANDARD (cont'd):**

DETAIL A:

Where 21" deep section is not used, replace with appropriate depth detail from cell library.

NOTES:

Complete second note by adding the Class I, II or III of corrosion resistant reinforcing steel required. For additional information on corrosion resistant reinforcing steel (CRR), see Structure and Bridge Division Instructional and Informational Memorandum (current IIM-S&B-81).

| STATE | FEDERAL AID ROUTE | FEDERAL AID PROJECT | STATE ROUTE | STATE PROJECT | SHEET NO. |
|---|---|---|---|---|---|
| VA. | — | | | | |

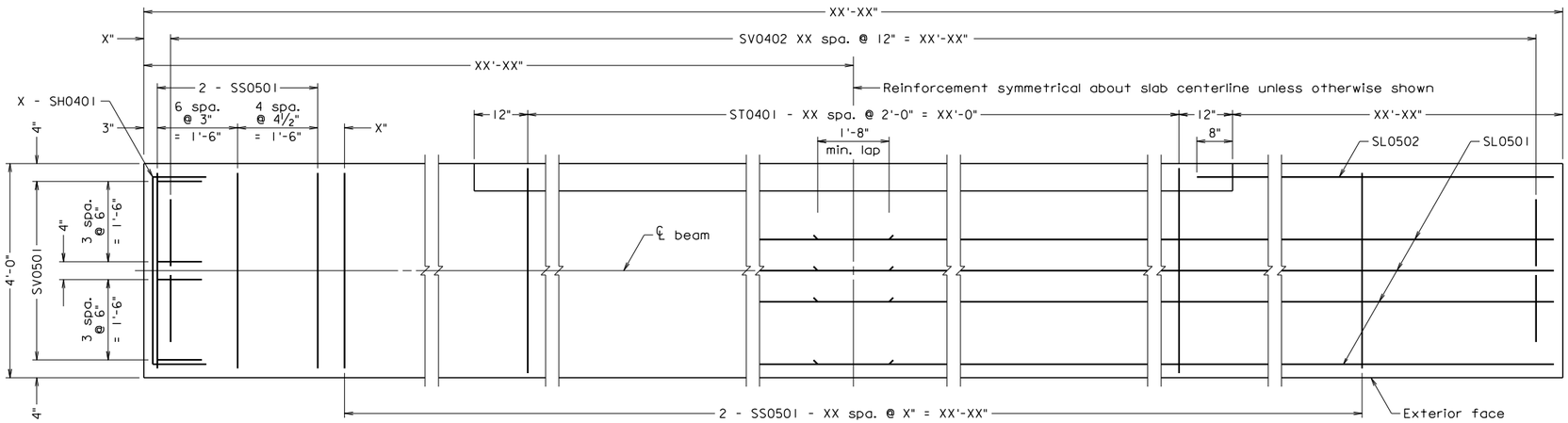


PLAN

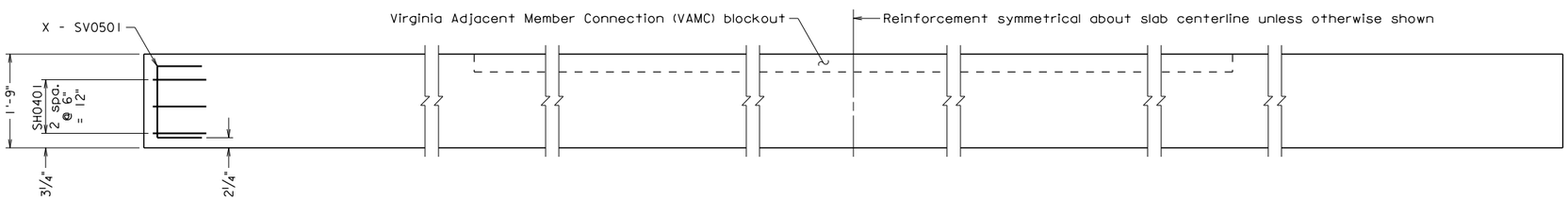


ELEVATION

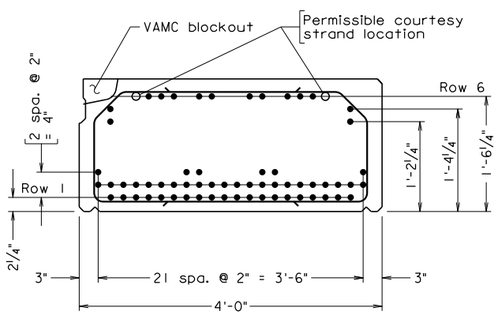


STRAND PATTERN
Scale: 1" = 1'-0"

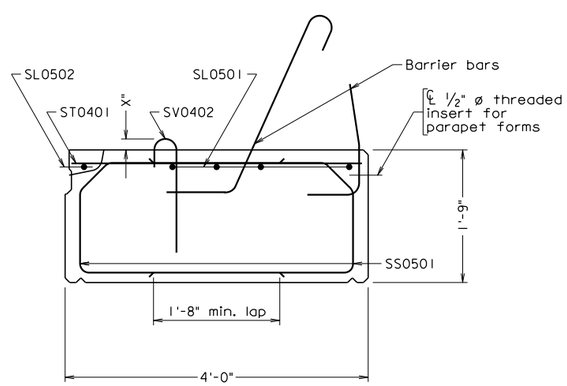


REINFORCING DETAILS
Scale: 1" = 1'-0"

Notes:

All reinforcing bars shall be Corrosion Resistant Reinforcing Steel, Class --.

In lieu of splicing two reinforcing bars to form each stirrup, the stirrup may be made from one single bar.

The Contractor may submit an alternate prestressing strand pattern to the Engineer for approval.

The Contractor has the option of stressing two courtesy strands each to 8,000 lbs at the locations indicated.

Slab corners damaged during construction shall be restored to their shape as shown on the plans by an approved epoxy mortar.

Contractor shall determine location and spacing of ½" ø threaded inserts for parapet forms.

Due to construction tolerances, adjustment to the bridge seat elevations may be needed. It is the Contractor's responsibility to make such adjustment as directed by the Engineer to insure the full bearing of the slab on all the pads.

## REINFORCING STEEL SCHEDULE

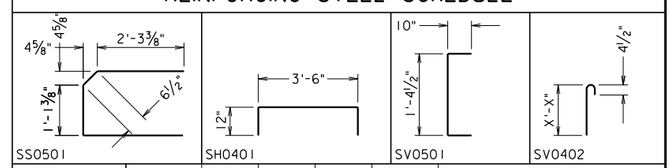


| Slab Size | Mark | No. | Size | Pin ø | Length | Location |
|---|---|---|---|---|---|---|
| 4'-0" x 21" Exterior slab Type A | SH0401 | | #4 | 2" | | End horizontal |
| | SL0501 | | #5 | — | | Top longitudinal |
| | SL0502 | | #5 | — | | Top longitudinal |
| | SS0501 | | #5 | 2½" | | Stirrup |
| | ST0401 | | #4 | — | | Top transverse |
| | SV0501 | | #5 | 2½" | | End vertical |
| | SV0402 | | #4 | 3" | | Composite vertical |
| | | | | | | |

Dimensions in bending diagram are out-to-out of bars.

Number of bars shown in table are per slab per slab type.

## PRESTRESSING STEEL DATA TABLE

| Strand Type | Slab Size | No. of strands per row: Row 1 | Row 2 | Row 3 | Row 4 | Row 5 | Row 6 | Distance from bottom of slab: Row 1 in. | Row 2 in. | Row 3 in. | Row 4 in. | Row 5 in. | Row 6 in. | Total number of strands per slab | Prestressing force per strand lbs. | Net camber N in. |
|---|---|---|---|---|---|---|---|---|---|---|---|---|---|---|---|---|
| 0.6" ø Low Relaxation Strands | 4'-0" x 21" Type A | | | | | | | | | | | | | | | |
| | | | | | | | | | | | | | | | | |

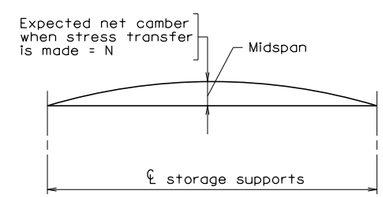


CAMBER DIAGRAM

Scale: ¾" = 1'-0" unless otherwise noted

©2016, Commonwealth of Virginia

| No. | Description | Date |
|---|---|---|
| | | |
| | | |
| | | |
| | | |
| | | |
| | | |
| | | |
| | | |

Revisions

COMMONWEALTH OF VIRGINIA
DEPARTMENT OF TRANSPORTATION

STRUCTURE AND BRIDGE DIVISION

# EXTERIOR SLAB TYPE A VAMC BLOCKOUTS

Designed: S&B DIV
Drawn: S&B DIV
Checked: S&B DIV

Date

Plan No. PSV-3

Sheet No.

PSV_3.dgn

12-28-2016

Sealed and Signed by:
Junyi Meng
Lic. No. 033572
On the date of
December 28, 2016

A copy of the original sealed and signed standard drawing is on file in the Central Office.

VDOT S&B DIVISION
RICHMOND, VA
STRUCTURAL ENGINEER

PSV-3

**PRESTRESSED CONCRETE AJACENT MEMBER STANDARD**
**VOIDED SLABS – VIRGINIA ADJACENT MEMBER CONNECTIONS (VAMC)**
**EXTERIOR SLAB – TYPE A**

**NOTES TO DESIGNER:**

Include standard PSV-1, PSV-2A or -2B, PSV-4 and PSV-6A or -6B in the plans when using this standard. Include standard PSV-5A in the plans when using F-shape parapet.

Cells for PLAN, ELEVATION, STRAND PATTERN AND REINFORCING DETAILS are provided for an exterior 4'-0" x 21" voided slab. Replace with appropriate cells where other width or depth is used. Cells for completing the standard are located in the PSC_VS.CEL library.

All bar sizes, reinforcement spacing and strand positions provided in cells are input field holders and are to be adjusted as per design.

**ADD THE FOLLOWING NOTES, DIMENSIONS, DETAILS, ETC. TO STANDARD:**

PLAN:

Place appropriate PLAN from cell library. Adjust bar sizes and spacing per design.

Transverse tendons are not required using VAMC details, but solid sections (breaks in voids serving as interior diaphragms) are required at the same intervals. See Part 2, Section 12.05, of this manual for interior diaphragm requirements.

Enter the number and total length of spaces for ST0401 bars. The overall longitudinal VAMC blockout dimension is to extend between 0.25 and 0.75 of the span rounded up to an even 6-foot interval. This will allow the use of reusable standard forms for the blockouts with slits to accommodate the ST0401 bars.

Adjust end stirrup size/spacing as necessary and enter stirrup spacing throughout span.

Enter composite bar spacing or remove bars/dimensioning where composite bars are not used.

Remove SL series lap where not required.

For skews greater than 0 degrees, cells are not available and the PLAN shall be developed by the Designer to the actual skew.

ELEVATION:

Place appropriate ELEVATION from cell library. Adjust bar sizes and spacing per design. Adjust interior diaphragm positions to match PLAN view.

STRAND PATTERN:

Remove strands from positions not used per design. Adjust or add strand spacing dimensioning as needed per design. Courtesy strand positions must be on 2" x 2" grid established by position of bottom strands.

REINFORCING DETAILS:

Adjust bar sizes per design. Remove composite bars where not used. Coordinate longitudinal bars with strand positions shown in STRAND PATTERN to ensure conflicts do not occur.

**PRESTRESSED CONCRETE ADJACENT MEMBER STANDARD**
**VOIDED SLABS – VIRGINIA ADJACENT MEMBER CONNECTIONS (VAMC)**
**EXTERIOR SLAB – TYPE A**

**ADD THE FOLLOWING NOTES, DIMENSIONS, DETAILS, ETC. TO STANDARD (cont'd):**

PRESTRESSING STEEL DATA TABLE:

Complete table. Ensure table content matches number and position of strands shown in STRAND PATTERN.

REINFORCING STEEL SCHEDULE:

Update schedule for specific section and skew. Verify all dimensions per design requirements and adjust where necessary. Where smaller size bar is adequate per design, adjust size and dimensions accordingly.

## REINFORCING STEEL SCHEDULE

| Slab size | Mark | Size | Dimension A | | | | Dimension B |
|---|---|---|---|---|---|---|---|
| | | | Skew angle | | | | |
| | | | 0° | over 0° to 15° | over 15° to 30° | over 30° to 45° | |
| 3'-0" x 15", x 18", x 21" | SH0401 | #4 | | | | | |
| 4'-0" x 15", x 18", x 21" | SH0401 | #4 | | | | | |
| All slab sizes | SL0501 | #5 | Depends on beam length / whether splice req.'d | | | | ------ |
| All slab sizes | SL0502 | #5 | Depends on drop-in bar blockout length | | | | ------ |
| 3'-0" x 15" | SS0501 | #5 | | | | | |
| 3'-0" x 18" | SS0501 | #5 | | | | | |
| 3'-0" x 21" | SS0501 | #5 | | | | | |
| 4'-0" x 15" | SS0501 | #5 | | | | | |
| 4'-0" x 18" | SS0501 | #5 | | | | | |
| 4'-0" x 21" | SS0501 | #5 | | | | | |
| 3'-0" x 15", x 18", x 21" | ST0401 | #4 | | | | | |
| 4'-0" x 15", x 18", x 21" | ST0401 | #4 | | | | | |
| 3'-0" / 4'-0" x 15" | SV0501 | #5 | | | | | |
| 3'-0" / 4'-0" x 18" | SV0501 | #5 | | | | | |
| 3'-0" / 4'-0" x 21" | SV0501 | #5 | | | | | |
| All slab sizes | SV0402 | #4 | | | | | |

NOTES:

Complete corrosion resistant reinforcing steel note by adding the required Class. See Structure and Bridge Division Instructional and Informational Memorandum (current IIM-S&B-81).

ANCHOR DETAIL and ALTERNATE ANCHOR DETAIL:

Where the ends of prestessed concrete voided slabs are not constrained or buoyancy will cause uplift of the superstructure, add the details and notes from the cell library to this sheet. If insufficient room, move them to another sheet.

| STATE | FEDERAL AID ROUTE | FEDERAL AID PROJECT | STATE ROUTE | STATE PROJECT | SHEET NO. |
|---|---|---|---|---|---|
| VA. | — | | | | |

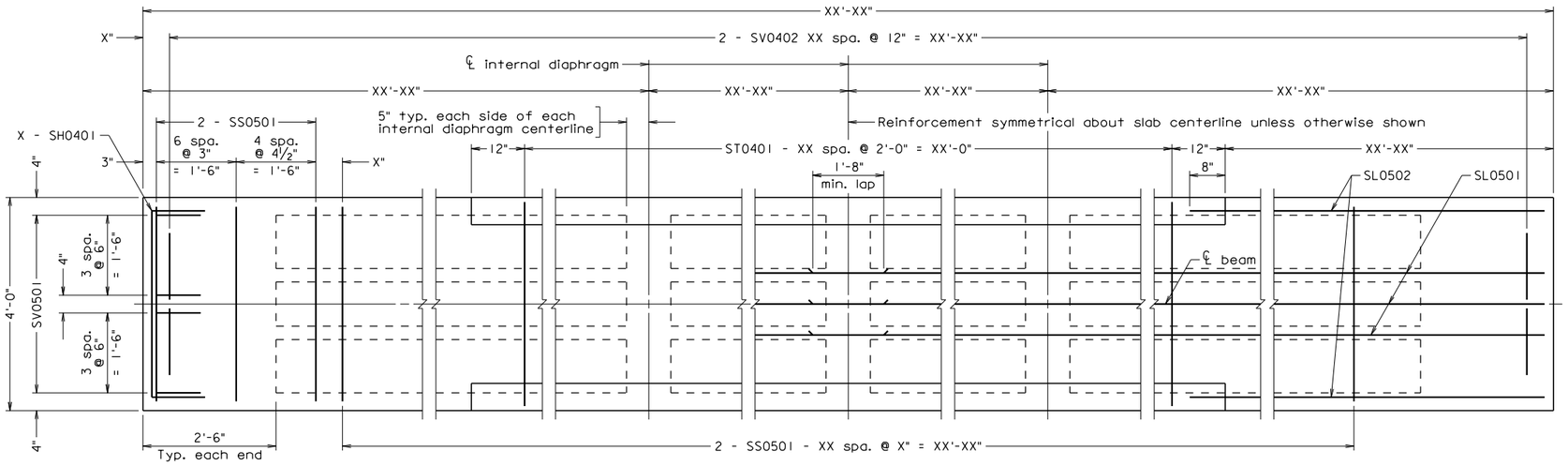


PLAN

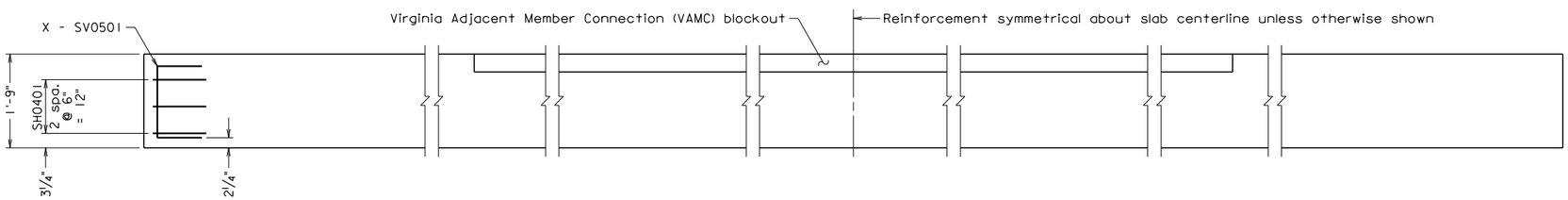


ELEVATION

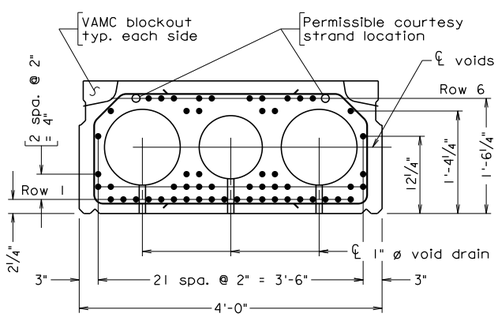


STRAND PATTERN

Scale: 1" = 1'-0"

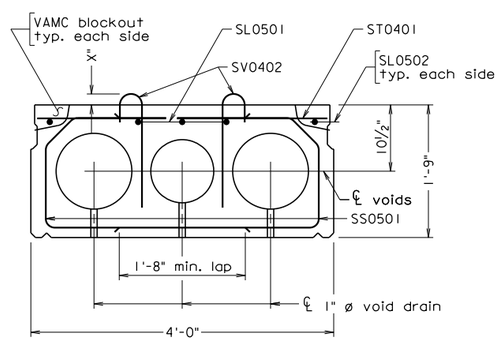


REINFORCING DETAILS

Scale: 1" = 1'-0"

Notes:

All reinforcing bars shall be Corrosion Resistant Reinforcing Steel, Class --.

In lieu of splicing two reinforcing bars to form each stirrup, the stirrup may be made from one single bar.

The Contractor may submit an alternate prestressing strand pattern to the Engineer for approval.

The Contractor has the option of stressing two courtesy strands each to 8,000 lbs at the locations indicated.

Slab corners damaged during construction shall be restored to their shape as shown on the plans by an approved epoxy mortar.

Due to construction tolerances, adjustment to the bridge seat elevations may be needed. It is the Contractor's responsibility to make such adjustment as directed by the Engineer to insure the full bearing of the slab on all the pads.

## REINFORCING STEEL SCHEDULE

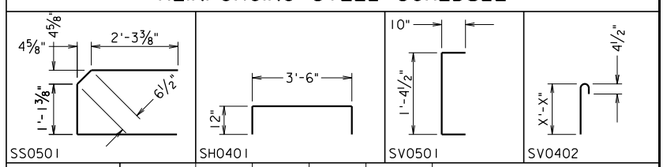


| Slab Size | Mark | No. | Size | Pin ø | Length | Location |
|---|---|---|---|---|---|---|
| 4'-0" x 21" Interior slab Type B | SH0401 | | #4 | 2" | | End horizontal |
| | SL0501 | | #5 | — | | Top longitudinal |
| | SL0502 | | #5 | — | | Top longitudinal |
| | SS0501 | | #5 | 2½" | | Stirrup |
| | ST0401 | | #4 | — | | Top transverse |
| | SV0501 | | #5 | 2½" | | End vertical |
| | SV0402 | | #4 | 3" | | Composite vertical |
| | | | | | | |

Dimensions in bending diagram are out-to-out of bars.

Number of bars shown in table are per slab per slab type.

## PRESTRESSING STEEL DATA TABLE

| Strand Type | Slab Size | No. of strands per row: Row 1 | Row 2 | Row 3 | Row 4 | Row 5 | Row 6 | Distance from bottom of slab: Row 1 in. | Row 2 in. | Row 3 in. | Row 4 in. | Row 5 in. | Row 6 in. | Total number of strands per slab | Prestressing force per strand lbs. | Net camber N in. |
|---|---|---|---|---|---|---|---|---|---|---|---|---|---|---|---|---|
| 0.6" ø Low Relaxation Strands | 4'-0" x 21" Type B | | | | | | | | | | | | | | | |
| | | | | | | | | | | | | | | | | |

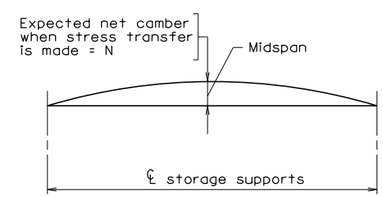


CAMBER DIAGRAM

Scale: ¾" = 1'-0" unless otherwise noted

©2011, Commonwealth of Virginia

| No. | Description | Date |
|---|---|---|
| | | |

Revisions

COMMONWEALTH OF VIRGINIA
DEPARTMENT OF TRANSPORTATION

STRUCTURE AND BRIDGE DIVISION

# INTERIOR SLAB TYPE B VAMC BLOCKOUTS

Designed: S&B DIV
Drawn: S&B DIV
Checked: S&B DIV

Date

Plan No. PSV-4

Sheet No.

PSV_4.dgn

12-28-2016

Sealed and Signed by:
Junyi Meng
Lic. No. 033572
On the date of
December 28, 2016

A copy of the original sealed and signed standard drawing is on file in the Central Office.

VDOT S&B DIVISION
RICHMOND, VA
STRUCTURAL ENGINEER

PSV-4

**PRESTRESSED CONCRETE AJACENT MEMBER STANDARD**
**VOIDED SLABS – VIRGINIA ADJACENT MEMBER CONNECTIONS (VAMC)**
**INTERIOR SLAB – TYPE B**

**NOTES TO DESIGNER:**

Include standard PSV-1, PSV-2A or -2B, PSV-3 and PSV-6A or -6B in the plans when using this standard. Include standard PSV-5A in the plans when using F-shape parapet.

Cells for PLAN, ELEVATION, STRAND PATTERN AND REINFORCING DETAILS are provided for an interior 4'-0" x 21" voided slab. Replace with appropriate cells where other width or depth is used. Cells for completing the standard are located in the PSC_VS.CEL library.

All bar sizes, reinforcement spacing and strand positions provided in cells are input field holders and are to be adjusted as per design.

**ADD THE FOLLOWING NOTES, DIMENSIONS, DETAILS, ETC. TO STANDARD:**

PLAN:

Place appropriate PLAN from cell library. Adjust bar sizes and spacing per design.

Transverse tendons are not required using VAMC details, but solid sections (breaks in voids serving as interior diaphragms) are required at the same intervals. Cells detail solid sections at quarter points. Remove solid section at midspan for third points or both outside solid sections for half point only. Remove solid sections by showing continuous void outlines. See Part 2, Section 12.05, of this manual for interior diaphragm requirements.

Enter the number and total length of spaces for ST0401 bars. The overall longitudinal VAMC blockout dimension is to extend between 0.25 and 0.75 of the span rounded up to an even 6-foot interval. This will allow the use of reusable standard forms for the blockouts with slits to accommodate the ST0401 bars.

Adjust end stirrup spacing as necessary and enter stirrup spacing throughout span.

Enter composite bar spacing or remove bars/dimensioning where composite bars are not used.

Remove SL series lap where not required.

For skews greater than 10 degrees, cells are not available and the PLAN shall be developed by the Designer to the actual skew.

ELEVATION:

Place appropriate ELEVATION from cell library. Adjust bar sizes and spacing per design. Adjust tendon positions to match PLAN view.

STRAND PATTERN:

Remove strands from positions not used per design. Adjust or add strand spacing dimensioning as needed per design. Courtesy strand positions must be on 2" x 2" grid established by position of bottom strands.

**ADD THE FOLLOWING NOTES, DIMENSIONS, DETAILS, ETC. TO STANDARD (cont'd):**

REINFORCING DETAILS:

Adjust bar sizes per design. Remove composite bars where not used. Coordinate longitudinal bars with strand positions shown in STRAND PATTERN to ensure conflicts do not occur.

PRESTRESSING STEEL DATA TABLE:

Complete table. Ensure table content matches number and position of strands shown in STRAND PATTERN.

REINFORCING STEEL SCHEDULE:

Update schedule for specific section and skew. Verify all dimensions per design requirements and adjust where necessary. Where smaller size bar is adequate per design, adjust size and dimensions accordingly.

## REINFORCING STEEL SCHEDULE

| Slab size | Mark | Size | Dimension A | | | | Dimension B |
|---|---|---|---|---|---|---|---|
| | | | Skew angle | | | | |
| | | | 0° | over 0° to 15° | over 15° to 30° | over 30° to 45° | |
| 3'-0" x 15", x 18", x 21" | SH0401 | #4 | | | | | |
| 4'-0" x 15", x 18", x 21" | SH0402 | #4 | | | | | |
| All slab sizes | SL0501 | #5 | Depends on beam length / whether splice req.'d | | | | ------ |
| All slab sizes | SL0502 | #5 | Depends on drop-in bar blockout length | | | | ------ |
| 3'-0" x 15" | SS0501 | #5 | | | | | |
| 3'-0" x 18" | SS0501 | #5 | | | | | |
| 3'-0" x 21" | SS0501 | #5 | | | | | |
| 4'-0" x 15" | SS0501 | #5 | | | | | |
| 4'-0" x 18" | SS0501 | #5 | | | | | |
| 4'-0" x 21" | SS0501 | #5 | | | | | |
| 3'-0" x 15", x 18", x 21" | ST0401 | #4 | | | | | |
| 4'-0" x 15", x 18", x 21" | ST0401 | #4 | | | | | |
| 3'-0" / 4'-0" x 15" | SV0501 | #5 | | | | | |
| 3'-0" / 4'-0" x 18" | SV0501 | #5 | | | | | |
| 3'-0" / 4'-0" x 21" | SV0501 | #5 | | | | | |
| All slab sizes | SV0402 | #4 | | | | | |

NOTES:

Complete corrosion resistant reinforcing steel note by adding the required Class. See Structure and Bridge Division Instructional and Informational Memorandum (current IIM-S&B-81).

| STATE | FEDERAL AID ROUTE | FEDERAL AID PROJECT | STATE ROUTE | STATE PROJECT | SHEET NO. |
|---|---|---|---|---|---|
| VA. | — | | | | |

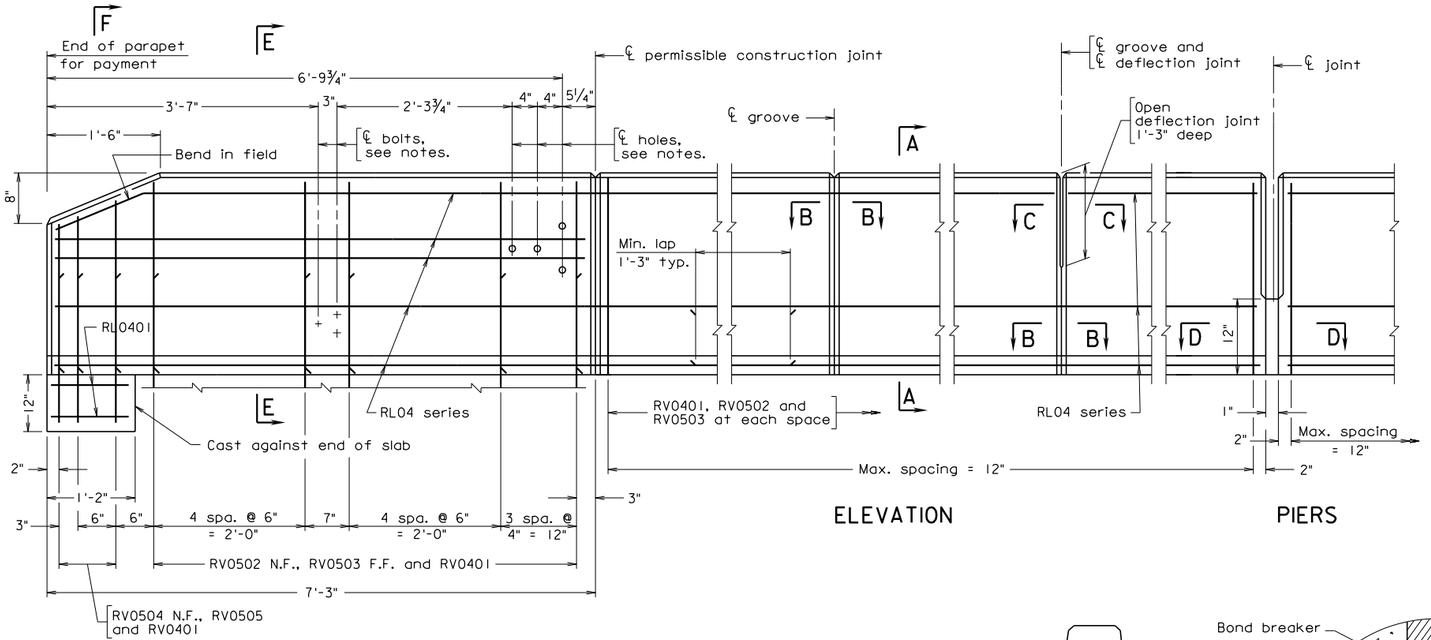


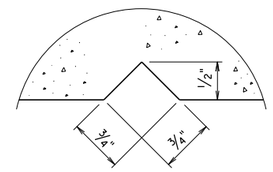


SECTION B-B
Full Scale
Groove detail for both sides of parapet.

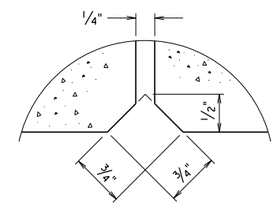


SECTION C-C
Full Scale
Deflection joint detail for both sides of parapet

Notes:

Rounded edges with 1" radius may be used in lieu of bevels along top of parapet.

All reinforcing bars shall be Corrosion Resistant Reinforcing Steel, Class __.

Spacing of grooves to be approximately 8'-0". Spacing of deflection joints shall not exceed three groove spaces.

Barrier delineator size, color, and spacing to be in accordance with the Specifications. Cost of delineator to be included in the price bid for parapet. Reflective surface of barrier delineator, in all instances, to be facing oncoming traffic.

The Contractor shall determine all dimensions and details necessary for installation.

All concrete shall be Class A4.

Terminal walls are detailed to take guardrail attachment GR-FOA-2.

Holes, where shown, shall be formed with sleeves of 1½" dia. nominal pipe.

Bolts, where shown, shall be ⅝" dia. expansion anchor bolts, 6" long to be drilled and installed when rub rail is attached.

Plan dimensions shown are measured in the respective horizontal and vertical planes. The reinforcing steel shown has been detailed based on a standard ¼" per foot cross slope and a 8½" slab depth. The Contractor shall adjust the reinforcing steel as required for other cross slopes and slab depths.

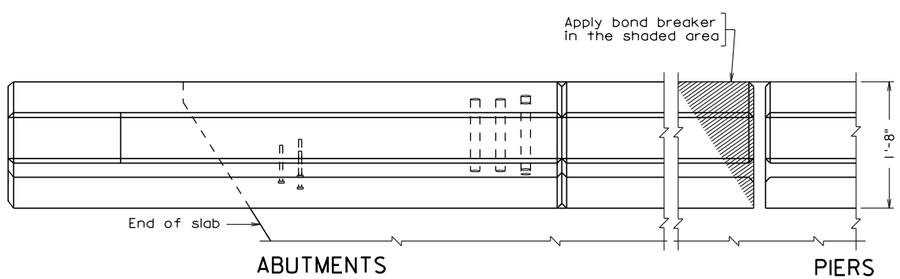


PART PLAN
TYPICAL FOR SKEWED CROSSING

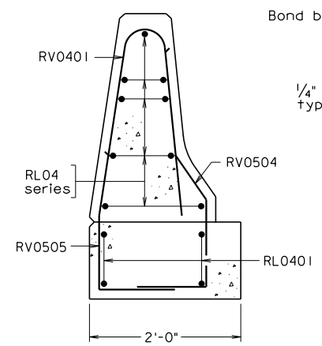


SECTION F-F
For details not shown, see Section A-A.

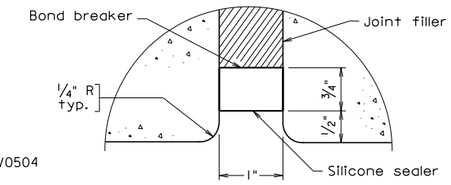


SECTION D-D
Full Scale
Joint detail for both sides of parapet

## REINFORCING STEEL SCHEDULE

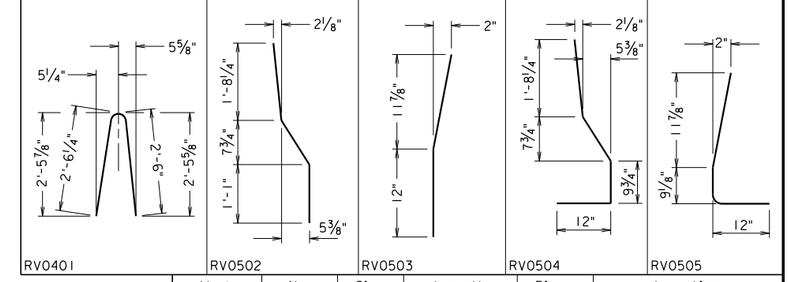


| Mark | No. | Size | Length | Pin ø | Location |
|---|---|---|---|---|---|
| RV0401 | · | #4 | 5'-2" | 4½" | Parapet |
| RV0502 | · | #5 | 3'-7" | 3¾" | Parapet |
| RV0503 | · | #5 | 2'-0" | 3¾" | Parapet |
| RV0504 | · | #5 | 4'-2" | 3¾" | Parapet |
| RV0505 | · | #5 | 2'-7" | 3¾" | Parapet |
| RL0401 | · | #4 | 1'-9" | — | Parapet |
| RL04 | · | #4 | · | — | Parapet |
| · | · | · | · | · | · |
| · | · | · | · | · | · |
| · | · | · | · | · | · |

Dimensions in bending diagram are out to out of bars, except as shown.

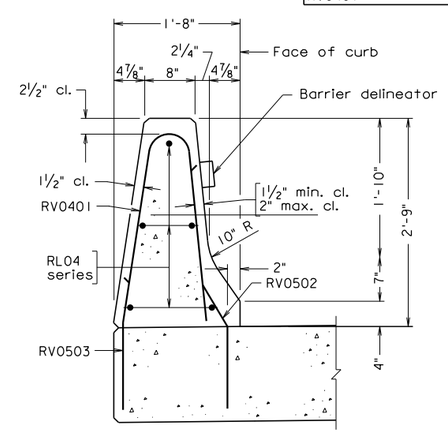


SECTION A-A

Gross concrete quantities (C.Y.) = Lin. ft. x 0.110 for all concrete above roadway slab.

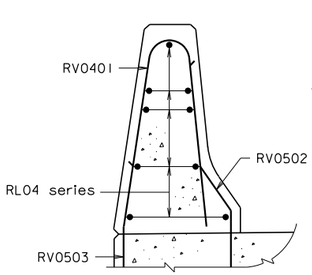


SECTION E-E
Holes and bolts not shown. For details not shown, see Section A-A.

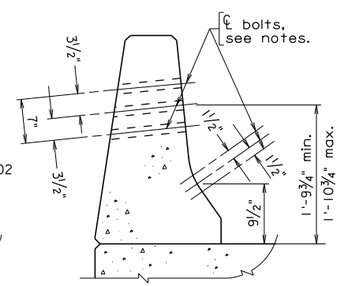


SECTION E-E
Reinforcing steel not shown

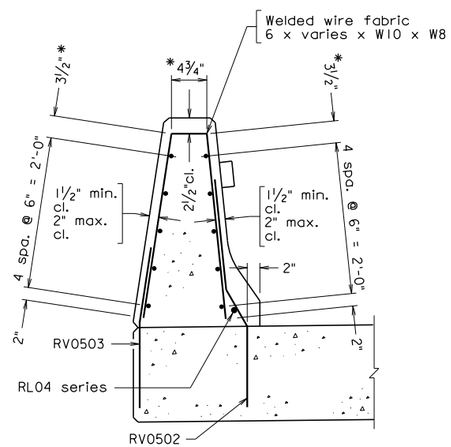


*Dimensions are out-to-out of wires.

SECTION A-A
ALTERNATE REINFORCING STEEL

Scale: 1" = 1'-0" unless otherwise noted

©2012, Commonwealth of Virginia

PSV_5A.dgn

08-07-2012

Sealed and Signed by:
Julius F.J. Volgyi Jr.
Lic. No. 010487
On the date of
Aug. 7, 2012

A copy of the original sealed and signed standard drawing is on file in the Central Office.

VDOT S&B DIVISION
RICHMOND, VA
STRUCTURAL ENGINEER

PSV-5A

| No. | Description | Date |
|---|---|---|
| | | |
| | | |
| | | |
| | | |
| | | |
| | | |
| | | |
| | | |

Revisions

COMMONWEALTH OF VIRGINIA
DEPARTMENT OF TRANSPORTATION

STRUCTURE AND BRIDGE DIVISION

# CAST-IN-PLACE CONCRETE PARAPET (F-SHAPE)

| Designed: | Date | Plan No. | Sheet No. |
|---|---|---|---|
| Drawn: | | PSV-5A | |
| Checked: | | | |

**PRESTRESSED CONCRETE ADJACENT MEMBER STANDARD**
**VOIDED SLABS – VIRGINIA ADJACENT MEMBER CONNECTIONS (VAMC)**
**CAST-IN-PLACE PARAPET (F-SHAPE)**

**NOTES TO DESIGNER:**

Standard is to be used as an insertable sheet when F-shape parapets are used.

Terminal wall is detailed on abutment.

If an initial bituminous overlay is used on the bridge at the time of construction, vertical dimensions and dimensions for reinforcing steel may need to be adjusted The vertical dimensions and dimensions for reinforcing steel shown on this standard are established from the top of the roadway surface for a 1" thick bituminous overlay at the face of parapet curb, $^{1}/_{4}$" per foot cross slope and a 15" slab depth.

If the thickness of the bituminous overlay at the face of parapet curb is greater than 1", vertical dimensions and dimensions for reinforcing steel will need to be adjusted. For example if a 2" overlay at the curb is set, the 4" curb dimension and the overall 2'-9" height of the parapet would need to be adjusted to 5" and 2'-10" respectively (Section A-A). In addition, the $9^{1}/_{2}$" and 1'-10" height of the bolts would need to be adjusted to $10^{1}/_{2}$" and 1'-11" respectively (Section E-E).

**ADD THE FOLLOWING NOTES, DIMENSIONS, DETAILS, ETC. TO STANDARD:**

SECTION A-A:

Modify vertical dimensions (4" curb and 2'-9" parapet height) as noted above if an initial overlay is used on bridge.

SECTION E-E:

Modify vertical dimensions ($9^{1}/_{2}$" curb and 1'-10" bolt locations) as noted above if an initial overlay is used on bridge.

REINFORCING STEEL SCHEDULE:

Modify bars if needed due to slab depth, cross slope or initial overlay if used on bridge.

NOTES:

Complete second note by adding the Class I, II or III of corrosion resistant reinforcing steel required. For additional information on corrosion resistant reinforcing steels (CRR), see Structure and Bridge Division Instructional and Informational Memorandum (current IIM-S&B-81).

| STATE | FEDERAL AID ROUTE | FEDERAL AID PROJECT | STATE ROUTE | STATE PROJECT | SHEET NO. |
|---|---|---|---|---|---|
| VA. | — | | | | |

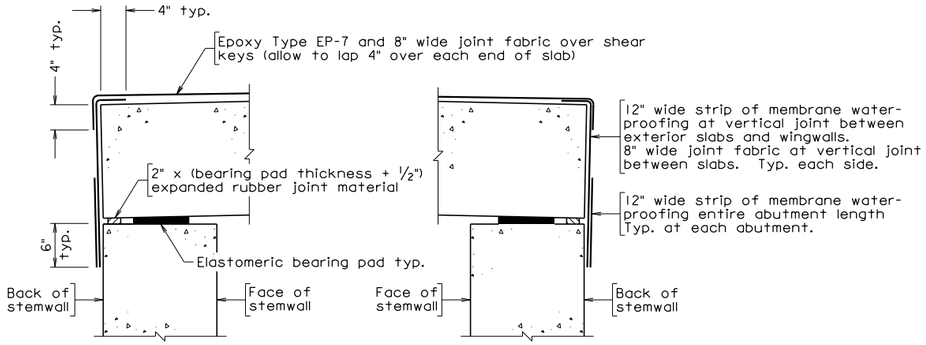


## WATERPROOFING MEMBRANE DETAIL

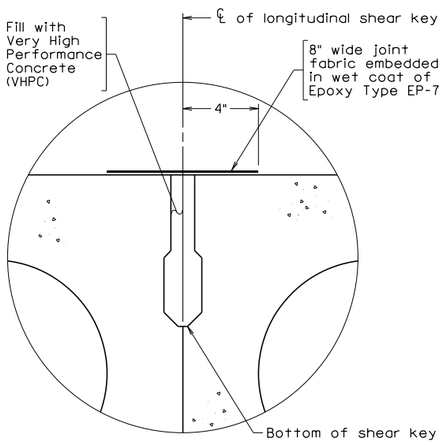


## SHEAR KEY DETAIL

Overlay not shown
Scale: 3" = 1'-0"

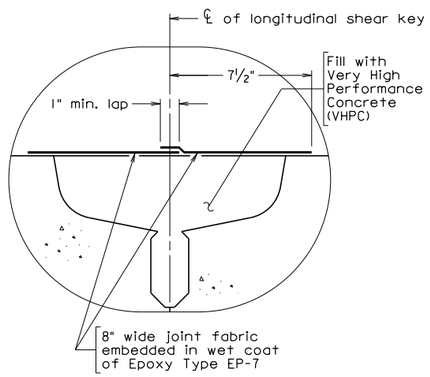


## VIRGINIA ADJACENT MEMBER CONNECTION (VAMC) DETAIL

Overlay not shown
Scale: 3" = 1'-0"

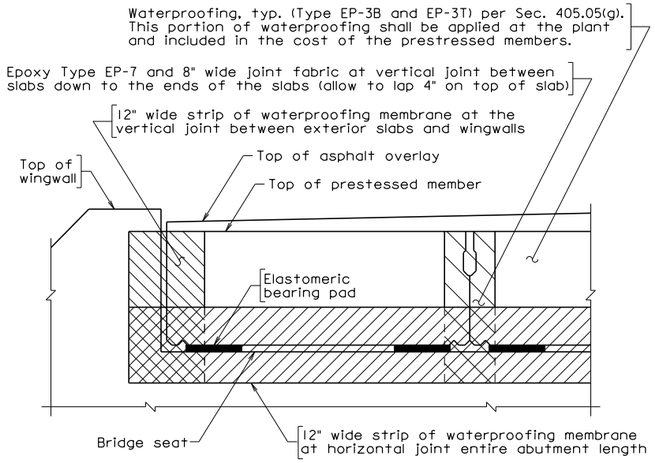


## END OF SLAB VIEW AT ABUTMENTS

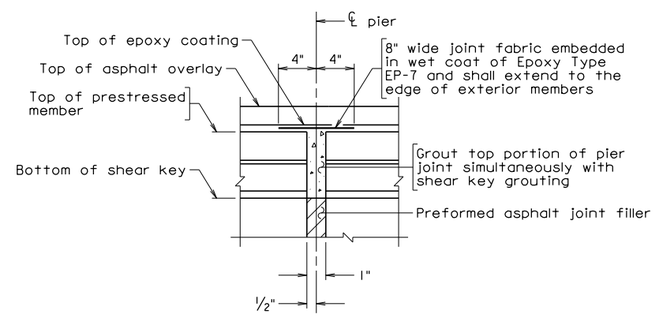


## SECTION THRU PIER JOINTS

Typical all pier joints
Normal to joint
Not to scale

Notes:

Details shown for 4'-0" x 18" prestressed concrete voided slab. Details similar for other widths and depths.

Epoxy and joint fabric shall not be placed until the VHPC has cured for 28 days unless the Contractor tests trial patches and obtains passing results per Section 431 of the 2016 Road and Bridge Specifications.

Procedure for sealing shear keys and pier joint utilizing Epoxy EP-7 and joint fabric:

Surface preparation, application guidelines, Epoxy EP-7 and sand shall be in accordance with Section 431 of the 2016 Road and Bridge Specifications.

1. Prepare deck surface.

2. Apply a coat of epoxy to the slab ends at the shear keys and then set the joint fabric into the wet epoxy. Allow enough joint fabric to provide for a 4" min. lap on top of slabs. Apply additional epoxy over the joint fabric to thoroughly wet the joint fabric. Remove any air pockets under the joint fabric using a short nap paint roller.

3. Apply the first coat of epoxy to slab surface over the grouted shear keys and set the jont fabric (continuous over pier joints) into the wet epoxy. Allow enough joint fabric to provide for a 4" min. lap down the slab ends. Apply additional epoxy over the joint fabric to thoroughly wet the joint fabric and provide sufficient free epoxy to engage the sand. Remove any air pockets under the joint fabric using a short nap paint roller. Apply sand and allow epoxy and sand to cure and then remove loose sand.

4. Apply the first coat of epoxy and sand on the remaining deck surface including pier joint (areas between shear keys). Remove loose sand after epoxy has cured. This will complete the first coat of epoxy overlay.

5. Apply a second coat of epoxy over pier joint and set the joint fabric into the wet epoxy. Apply additional epoxy over the joint fabric to thoroughly wet the joint fabric and provide sufficient free epoxy to engage the sand. Remove any air pockets under the joint fabric using a short nap paint roller. Apply sand and allow epoxy and sand to cure and then remove loose sand.

6. Apply second coat of epoxy and sand, covering remaining surface of deck including shear keys. Remove loose sand after the epoxy has cured.

7. Any epoxy spills outside the limits of the shear key treatment shall be covered with sand while the epoxy is still wet.

The cost of Epoxy Type EP-7, sand and joint fabric shall be included in the cost of the prestressed members.

Joint fabric from the VDOT Special Products Evaluation List under Joint Fabrics shall be used.

Notes for End of Slab Membrane Waterproofing:

The membrane shall be applied to the end of slabs at abutments at the vertical joint between exterior slabs and wingwalls and the horizontal joint as shown in END OF SLAB VIEW AT ABUTMENTS.

The membrane shall consist of a Type III preformed membrane system in accordance with Section 429 of the 2016 Road and Bridge Specifications. The cost of the membrane shall be included in the cost of the prestressed members.

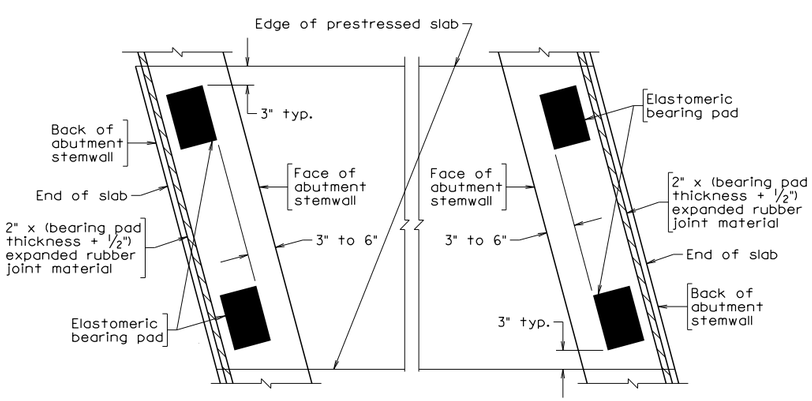


PART PLAN AT ABUTMENT A

PART PLAN AT ABUTMENT B

## END BEARING DETAILS

Scale: 1" = 1'-0" unless otherwise shown

©2016, Commonwealth of Virginia

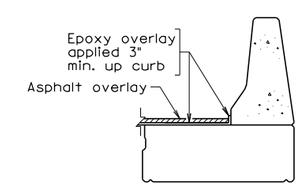


## SECTION THRU PARAPET

Scale: 1/2" = 1'-0"

PSV_6A.dgn

12-28-2016

Sealed and Signed by:
Junyi Meng
Lic. No. 033572
On the date of
December 28, 2016

A copy of the original sealed and signed standard drawing is on file in the Central Office.

VDOT S&B DIVISION
RICHMOND, VA
STRUCTURAL ENGINEER

PSV-6A

| No. | Description | Date |
|---|---|---|
| | Revisions | |

COMMONWEALTH OF VIRGINIA
DEPARTMENT OF TRANSPORTATION

STRUCTURE AND BRIDGE DIVISION

# END BEARING AND WATERPROOFING DETAILS FOR ASPHALT OVERLAY

Designed: S&B DIV
Drawn: S&B DIV
Checked: S&B DIV

Date

Plan No. PSV-6A

Sheet No.

**PRESTRESSED CONCRETE ADJACENT MEMBER STANDARD**
**VOIDED SLABS – VIRGINIA ADJACENT MEMBER CONNECTIONS (VAMC)**
**WATERPROOFING DETAILS FOR ASPHALT OVERLAY**

**NOTES TO DESIGNER:**

Include standard PSV-1, PSV-2A, PSV-3 and PSV-4 in the plans when using this standard.

Include standard PSV-5A in the plans when using F-shape parapet.

Details are shown for 4'-0" x 18" prestressed concrete voided slabs. Details are similar for other widths and depths and alterations are not necessary unless indicated below. Remove scales from details and indicate sheet is Not to Scale at bottom when other widths and depths are used. Scales are shown on the standard sheet to assist Designers when detail changes are necessary.

Cells for completing the standard are located in the PSC_VS.CEL library.

**ADD THE FOLLOWING NOTES, DIMENSIONS, DETAILS, ETC. TO STANDARD:**

WATERPROOFING MEMBRANE DETAIL:

Modify abutment or bearing details as necessary.

END OF SLAB VIEW AT ABUTMENTS:

Modify details when necessary to convey waterproofing membrane limits due to abutment details.

SECTION THRU PIER JOINTS:

Do not remove detail for bridges without piers. Modify the detail when sleeves through the beam ends for anchor bolts are used at fixed bearing locations.

SECTION THRU PARAPET:

Replace with parapet or other rail as needed.

END BEARING DETAILS:

Modify details as necessary where laminated elastomeric bearings are used to account for grade, skew or longer expansion lengths. Where grades exceed 1 percent and laminated elastomeric bearings are not used, add cell for SLABS ON GRADIENT IN EXCESS OF 1% to standards PSV -3 and -4.

NOTES:

Do not alter procedure for bridges without piers.

| STATE | FEDERAL AID ROUTE | FEDERAL AID PROJECT | STATE ROUTE | STATE PROJECT | SHEET NO. |
|---|---|---|---|---|---|
| VA. | — | | | | |

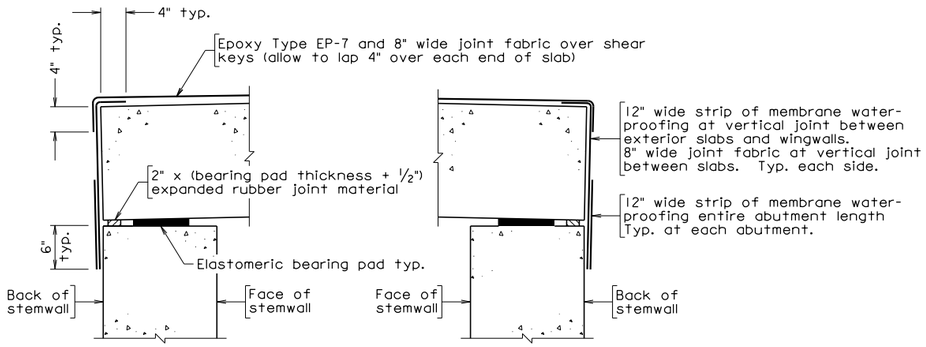


ABUTMENT A

ABUTMENT B

## WATERPROOFING MEMBRANE DETAIL

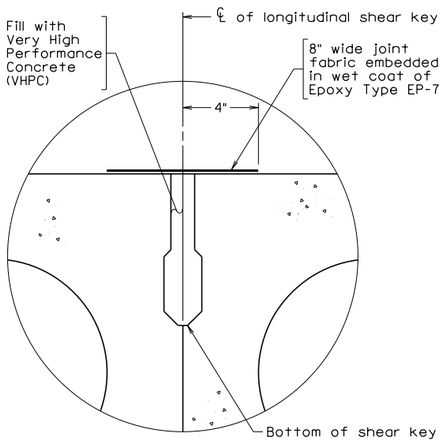


## SHEAR KEY DETAIL

Overlay not shown
Scale: 3" = 1'-0"

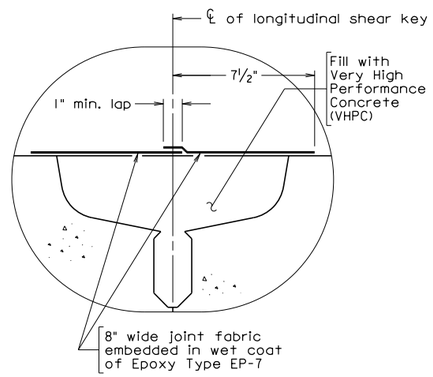


## VIRGINIA ADJACENT MEMBER CONNECTION (VAMC) DETAIL

Overlay not shown
Scale: 3" = 1'-0"

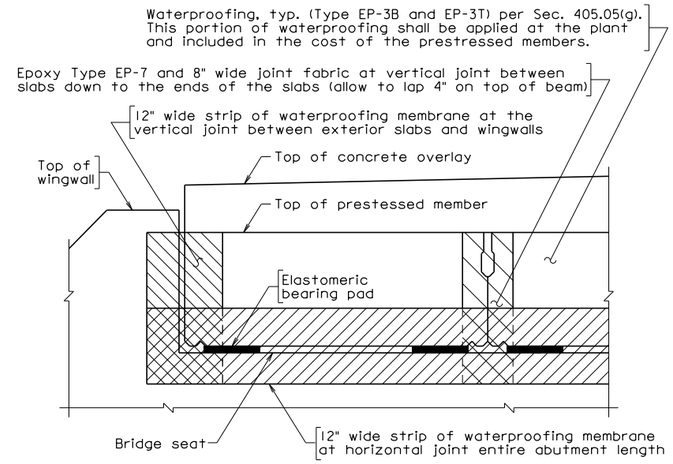


## END OF SLAB VIEW AT ABUTMENTS

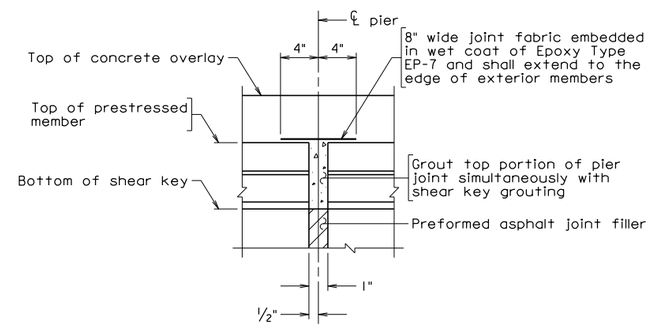


## SECTION THRU PIER JOINTS

Typical all pier joints
Normal to joint
Not to Scale

Notes:

Details shown for 4'-0" x 18" prestressed concrete voided slab. Details similar for other widths and depths.

Epoxy and joint fabric shall not be placed until the VHPC has cured for 28 days unless the Contractor tests trial patches and obtains passing results per Section 431 of the 2016 Road and Bridge Specifications.

Procedure for sealing shear keys and pier joint utilizing Epoxy EP-7 and joint fabric:

Surface preparation, application guidelines, Epoxy EP-7 and sand shall be in accordance with Section 431 of the 2016 Road and Bridge Specifications.

1. Prepare deck surface.

2. Apply a coat of epoxy to the slab ends at the shear keys and then set the joint fabric into the wet epoxy. Allow enough joint fabric to provide for a 4" min. lap on top of slabs. Apply additional epoxy over the joint fabric to thoroughly wet the joint fabric. Remove any air pockets under the joint fabric using a short nap paint roller.

3. Apply the first coat of epoxy to slab surface over the grouted shear keys and set the joint fabric (continuous over pier joints) into the wet epoxy. Allow enough joint fabric to provide for a 4" min. lap down the slab ends. Apply additional epoxy over the joint fabric to thoroughly wet the joint fabric and provide sufficient free epoxy to engage the sand. Remove any air pockets under the joint fabric using a short nap paint roller. Apply sand and allow epoxy and sand to cure and then remove loose sand.

4. Apply the first coat of epoxy over pier joint and set the joint fabric into the wet epoxy. Apply additional epoxy over the joint fabric to thoroughly wet the joint fabric and provide sufficient free epoxy to engage the sand. Remove any air pockets under the joint fabric using a short nap paint roller. Apply sand and allow epoxy and sand to cure and then remove loose sand.

5. Apply a second coat of epoxy and sand over shear keys and pier joint. Remove loose sand after epoxy has cured.

6. Any epoxy spills outside the limits of the shear key treatment shall be covered with sand while the epoxy is still wet.

The cost of Epoxy Type EP-7, sand and joint fabric shall be included in the cost of the prestressed members.

Joint fabric from the VDOT Special Products Evaluation List under Joint Fabrics shall be used.

Notes for End of Slab Membrane Waterproofing:

The membrane shall be applied to the end of slabs at abutments at the vertical joint between exterior slabs and wingwalls and the horizontal joint as shown in END OF SLAB VIEW AT ABUTMENTS.

The membrane shall consist of a Type III preformed membrane system in accordance with Section 429 of the 2016 Road and Bridge Specifications. The cost of the membrane shall be included in the cost of the prestressed members.

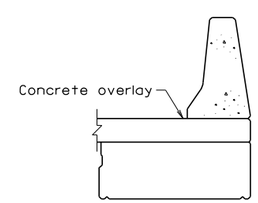


## SECTION THRU PARAPET

Scale: 1/2" = 1'-0"

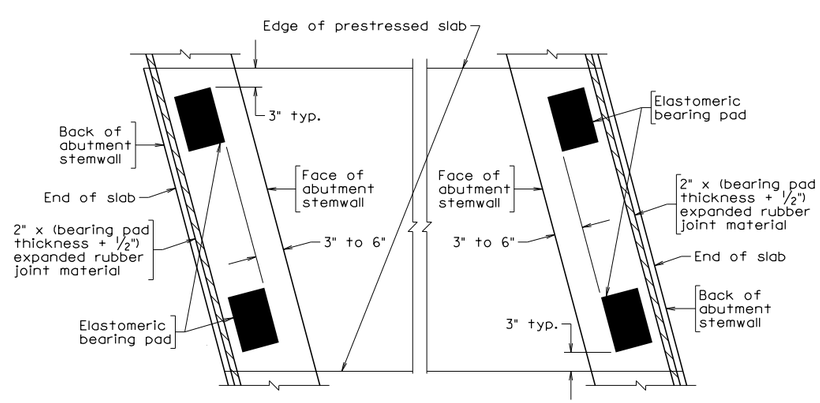


PART PLAN AT ABUTMENT A

PART PLAN AT ABUTMENT B

## END BEARING DETAILS

Scale: 1" = 1'-0" unless otherwise shown

©2016, Commonwealth of Virginia

PSV_6B.dgn

12-28-2016

Sealed and Signed by:
Junyi Meng
Lic. No. 033572
On the date of
December 28, 2016

A copy of the original sealed and signed standard drawing is on file in the Central Office.

VDOT S&B DIVISION
RICHMOND, VA
STRUCTURAL ENGINEER

PSV-6B

| No. | Description | Date |
|---|---|---|
| | | |

Revisions

COMMONWEALTH OF VIRGINIA
DEPARTMENT OF TRANSPORTATION

STRUCTURE AND BRIDGE DIVISION

# END BEARING AND WATERPROOFING DETAILS FOR CONCRETE OVERLAY

Designed: S&B DIV
Drawn: S&B DIV
Checked: S&B DIV

Date

Plan No. PSV-6B

Sheet No.

**PRESTRESSED CONCRETE ADJACENT MEMBER STANDARD**
**VOIDED SLABS – VIRGINIA ADJACENT MEMBER CONNECTIONS (VAMC)**
**WATERPROOFING DETAILS FOR CONCRETE OVERLAY**

**NOTES TO DESIGNER:**

Include standard PSV-1, PSV-2B, PSV-3 and PSV-4 in the plans when using this standard.

Include standard PSV-5A in the plans when using F-shape parapet.

Details are shown for 4'-0" x 18" prestressed concrete voided slabs. Details are similar for other widths and depths and alterations are not necessary unless indicated below. Remove scales from details and indicate sheet is Not to Scale at bottom when other widths and depths are used. Scales are shown on the standard sheet to assist Designers when detail changes are necessary.

Cells for completing the standard are located in the PSC_VS.CEL library.

**ADD THE FOLLOWING NOTES, DIMENSIONS, DETAILS, ETC. TO STANDARD:**

WATERPROOFING MEMBRANE DETAIL:

Modify abutment or bearing details as necessary.

END OF SLAB VIEW AT ABUTMENTS:

Modify details when necessary to convey waterproofing membrane limits due to abutment details.

SECTION THRU PIER JOINTS:

Do not remove detail for bridges without piers. Modify the detail when sleeves through the beam ends for anchor bolts are used at fixed bearing locations.

SECTION THRU PARAPET:

Replace with parapet or other rail as needed.

END BEARING DETAILS:

Modify details as necessary where laminated elastomeric bearings are used to account for grade, skew or longer expansion lengths. Where grades exceed 1 percent and laminated elastomeric bearings are not used, add cell for SLABS ON GRADIENT IN EXCESS OF 1% to standards PSV -3 and -4.

NOTES:

Do not alter procedure for bridges without piers.

| STATE | FEDERAL AID ROUTE | FEDERAL AID PROJECT | STATE ROUTE | STATE PROJECT | SHEET NO. |
|---|---|---|---|---|---|
| VA. | — | | | | |

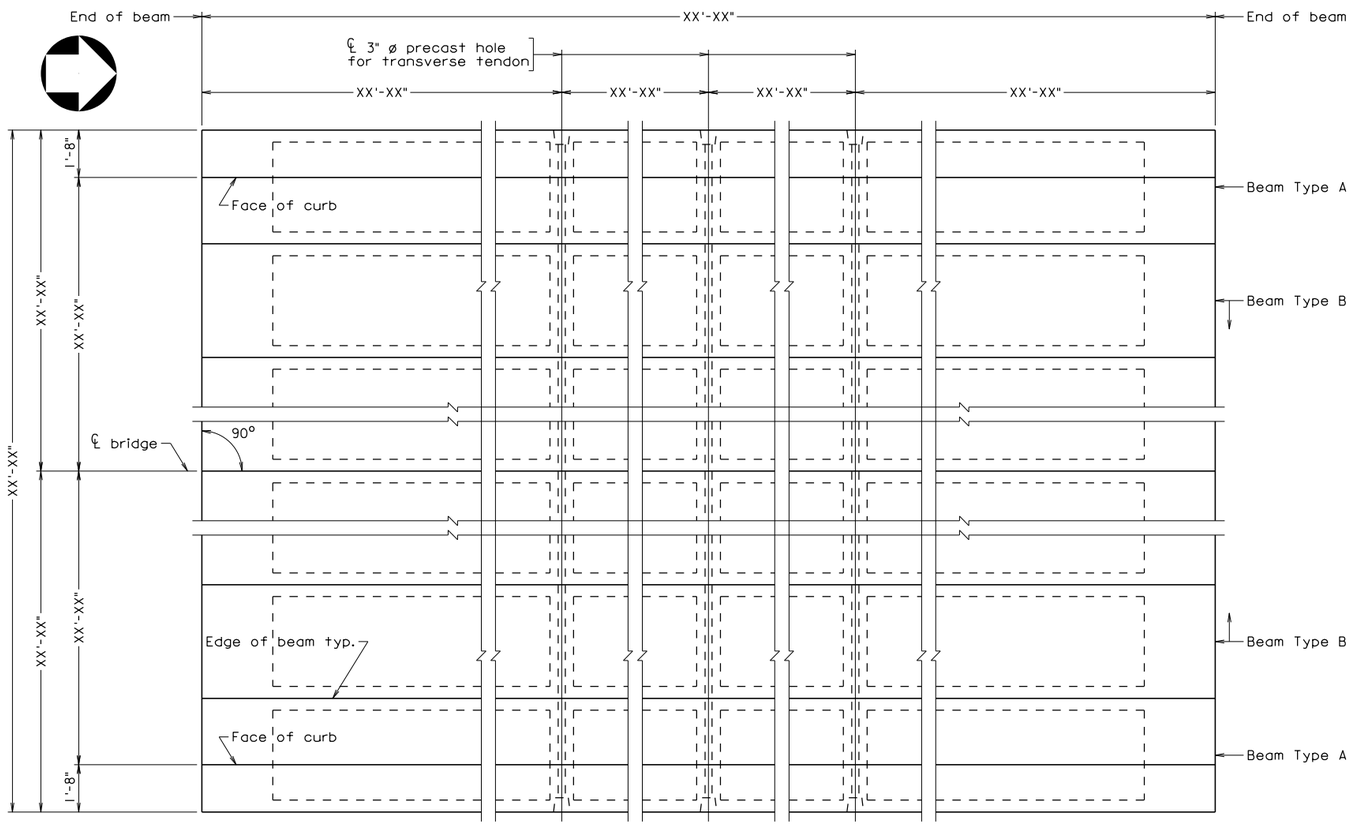


## ERECTION DIAGRAM

Shear key limits not shown for clarity

Notes:

For shear key dimensions, see Detail A on sheet __.

PBT_1.dgn

12-28-2016

PBT-1

Sealed and Signed by:
Junyi Meng
Lic. No. 033572
On the date of
December 28, 2016

A copy of the original sealed and signed standard drawing is on file in the Central Office.

VDOT S&B DIVISION
RICHMOND, VA
STRUCTURAL ENGINEER

Scale: 3/8" = 1'-0" unless otherwise noted

©2016, Commonwealth of Virginia

| No. | Description | Date |
|---|---|---|
| | | |
| | | |
| | | |
| | | |
| | | |
| | | |
| | | |

Revisions

COMMONWEALTH OF VIRGINIA
DEPARTMENT OF TRANSPORTATION

STRUCTURE AND BRIDGE DIVISION

# ERECTION DIAGRAM

Designed: S&B DIV
Drawn: S&B DIV
Checked: S&B DIV

Date

Plan No. PBT-1

Sheet No.

**PRESTRESSED CONCRETE AJACENT MEMBER STANDARD**
**BOX BEAMS – TRANSVERSE TENDONS**
**ERECTION DIAGRAM**

**NOTES TO DESIGNER:**

Include standard PBT-2A or -2B, PBT-3, PBT-4 and PBT-6A or -6B in the plans when using this standard. Include standard PBT-5A in the plans when using F-shape parapet.

PBT series standards shall not be used with asphalt overlays where skew exceeds 10 degrees. In these instances, PBV series standards shall be used.

The default ERECTION DIAGRAM cell provided is for single span 4'-0" wide box beams on 0 degree skew where an edge of beam falls on the bridge centerline for beams constrained from lateral movement by wing haunches cast tight against the beams. F-shape parapet is shown with the back of parapet aligning with the exterior edge of beam.

Cells for completing the standard are located in the PSC_BB.CEL library.

The available ERECTION DIAGRAM cells are generic and may require modification or complete replacement as indicated below.

**ADD THE FOLLOWING NOTES, DIMENSIONS, DETAILS, ETC. TO STANDARD:**

ERECTION DIAGRAM:

Replace with appropriate cell where 3'-0" box beams are used, skew is other than 0 degrees or centerline of bridge falls within beam width.

Enter transverse tendon spacing. Cells detail tendons at quarter points for beams constrained from lateral movement by wing haunches cast tight against the beams. Remove tendon position at midspan for third points or both outside tendon positions for half point only. Where tendon positions are removed, remove void breaks to show continuous void outlines. See Part 2, Section 12.06, of this manual for tendon requirements. Add end tendon positions where beams are not constrained from lateral movement centered on the width of end solid section (i.e., 1'-3" from end of beam). End tendon position or stirrup spacing may need adjustment to coordinate and eliminate conflicts.

Enter beam length, bridge width, distances to bridge centerline and distances to faces of curb/rail.

Where F-shape parapet is not used or the back of parapet/rail does not align with the exterior edge of beam, adjust details to show actual barrier width and position.

Orient North Arrow to correct direction.

For skews greater than 10 degrees, cells are not available and the ERECTION DIAGRAM shall be developed by the Designer to the actual skew. See Part 2, File No. 12.06-12 for sample sheet showing example details required.

**ADD THE FOLLOWING NOTES, DIMENSIONS, DETAILS, ETC. TO STANDARD (cont'd):**

ERECTION DIAGRAM (continued):

For multiple spans, the ERECTION DIAGRAM shall be developed by the Designer to provide the necessary details for the complete structure. Where a reduced scale is necessary such that showing void outlines reduces detail clarity significantly, remove void outlines.

For stage construction, temporary barrier is typically necessary requiring an additional member type and the ERECTION DIAGRAM shall be developed by the Designer to provide the required details. See Part 2, File No. 12.06-12 for sample sheet showing example details required. An additional interior beam sheet will be necessary and can be developed by providing an additional PBT-4 standard sheet in the plan set and modifying to provide the Type C details.

NOTES:

Enter sheet numbers for references to specific details.

| STATE | FEDERAL AID ROUTE | FEDERAL AID PROJECT | STATE ROUTE | STATE PROJECT | SHEET NO. |
|---|---|---|---|---|---|
| VA. | — | | | | |

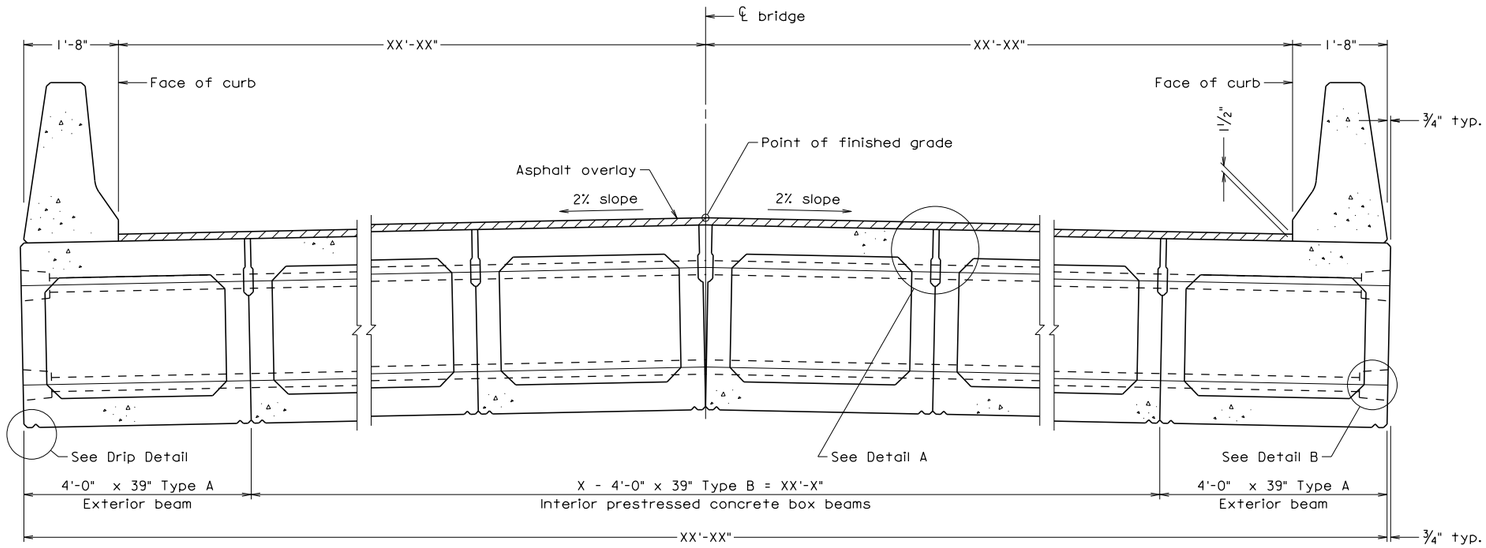


## TRANSVERSE SECTION

NOTES:

The bridge and roadway widths shown are nominal. Actual widths may vary due to fabrication and construction (gaps between boxes) tolerances.

Asphalt concrete overlay shall be Type SM-12.5D. Payment for the entire overlay shall be made at the unit price for asphalt concrete Type SM-2C.

Transverse tendons shall be ½" dia. coated, low-relaxation Grade 270 strand (Polystrand CP or equal) tensioned to 31,600 lbs. When the length of the strand used for transverse tendon is less than 20 feet, substitute a ⅞" dia. smooth rod conforming to ASTM A449 with 2½" long threaded ends tensioned to 30,000 lbs. for the ½" dia. strand. The rod shall have a washer and nut at each end. Rods, nuts, washers and 1" x 5" x 5" steel plates shall be galvanized.

Engineered Cementitious Compostite concrete shall be furnished and placed in accordance with the current VDOT Special Provision for Engineered Cementitious Composite (ECC). The cost of the ECC shall be included in the cost of the prestressed concrete member.

All keyway surfaces shall be cleaned of all dirt, laitance and loose aggregate by means of sandblasting and pre-wetted prior to the grouting of shear keys.

All grouting of shear keys with ECC shall be done in one continuous operation without interruption for each span. Care shall be taken to prevent leakage of ECC into precast holes for transverse tendons or from bottoms of shear keys.

Post-tensioning of transverse tendons and the casting of parapets shall not be done until all grouting of keys are completed and the ECC has reached a minimum strength of 4000 psi.

Entire deck shall be waterproofed in accordance with the requirements of Section 405 and Section 416 of the Specifications. For waterproofing details, see sheet ___.

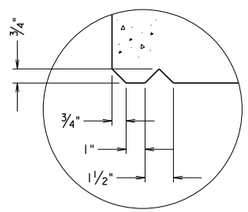


## DRIP DETAIL

Typ. each side
of each member
Scale: 3" = 1'-0"

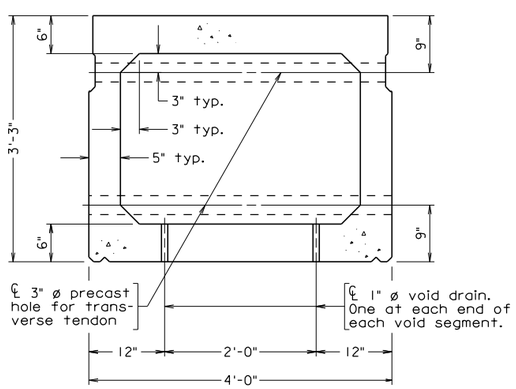


## TYPICAL INTERIOR SECTION TYPE B

Scale: 1" = 1'-0"

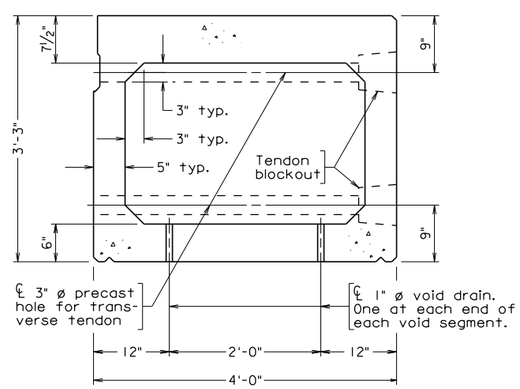


## TYPICAL EXTERIOR SECTION TYPE A

Scale: 1" = 1'-0"

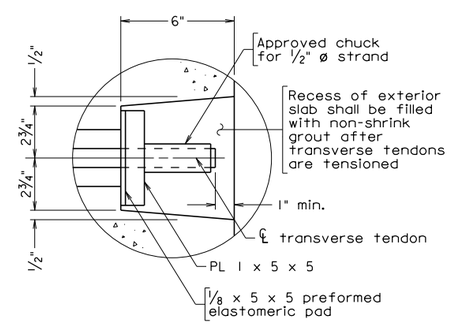


## DETAIL B

Scale: 3" = 1'-0"

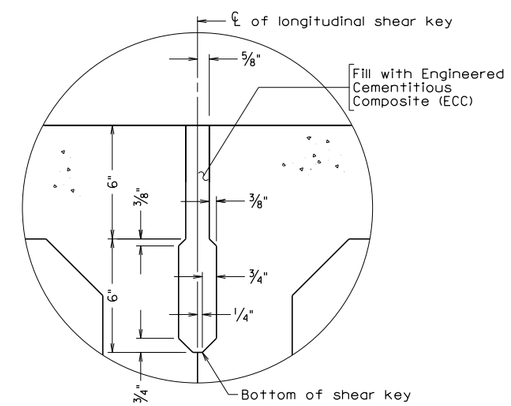


## DETAIL A

Overlay not shown
All shear key dimensions typ. each side
Scale: 3" = 1'-0"

Scale: ¾" = 1'-0" unless otherwise noted

©2016, Commonwealth of Virginia

PBT_2A.dgn

12-28-2016

PBT-2A

Sealed and Signed by:
Junyi Meng
Lic. No. 033572
On the date of
December 28, 2016

A copy of the original sealed and signed standard drawing is on file in the Central Office.

VDOT S&B DIVISION
RICHMOND, VA
STRUCTURAL ENGINEER

| No. | Description | Date |
|---|---|---|
| | Revisions | |

COMMONWEALTH OF VIRGINIA
DEPARTMENT OF TRANSPORTATION

STRUCTURE AND BRIDGE DIVISION

# TRANSVERSE AND TYPICAL SECTIONS; ASPHALT OVERLAY

Designed: S&B DIV
Drawn: S&B DIV
Checked: S&B DIV

Date

Plan No. PBT-2A

Sheet No.

**PRESTRESSED CONCRETE ADJACENT MEMBER STANDARD**
**BOX BEAMS – TRANSVERSE TENDONS**
**TRANSVERSE AND TYPICAL SECTIONS – ASPHALT OVERLAY**

## NOTES TO DESIGNER:

Include standard PBT-1, PBT-3, PBT-4 and PBT-6A in the plans when using this standard. Include standard PBT-5A in the plans when using F-shape parapet.

The designer shall ensure that the width of the pier cap or the seat of the abutment is sufficient for locating the anchor bolts.

The designer should avoid whenever possible the mixing of 3'-0" and 4'-0" wide beam sections.

For exterior beams, use thicker top flange to avoid conflicts and problems with reinforcing steel for some parapets/railings (e.g., F-shape).

The default cells provided on the sheet are for 4'-0" x 39" box beams. Transverse Section is shown for beams sloped to bridge crown, edge of beam falls on the bridge centerline and back of F-shape parapet aligned with the exterior edge of beam.

Cells for completing the standard are located in the PSC_BB.CEL library.

## ADD THE FOLLOWING NOTES, DIMENSIONS, DETAILS, ETC. TO STANDARD:

TRANSVERSE SECTION:

Enter dimensions from face of curb/rail to bridge centerline. Enter number of interior sections and total length of interior sections. Enter total width.

Modify F-shaped parapet position when not aligned with the edge of the exterior beam. Replace with sidewalk, rail, etc. as needed.

Replace with appropriate cell for other depths/widths and where beams are level.

For stage construction, the Transverse Section shall be developed by the Designer. The Transverse Section may need to be drawn full width to properly show and dimension the location of the temporary barrier and a reduced scale may be necessary. An additional interior beam sheet is required and can be developed by providing an additional PBT-4 standard sheet in the plan set and modifying to provide the Type C details.

TYPICAL INTERIOR SECTION and TYPICAL EXTERIOR SECTION:

Where 4'-0" x 39" sections are not used, replace with appropriate sections from cell library. For stage construction, add Type C Section.

| STATE | FEDERAL AID ROUTE | FEDERAL AID PROJECT | STATE ROUTE | STATE PROJECT | SHEET NO. |
|---|---|---|---|---|---|
| VA. | — | | | | |

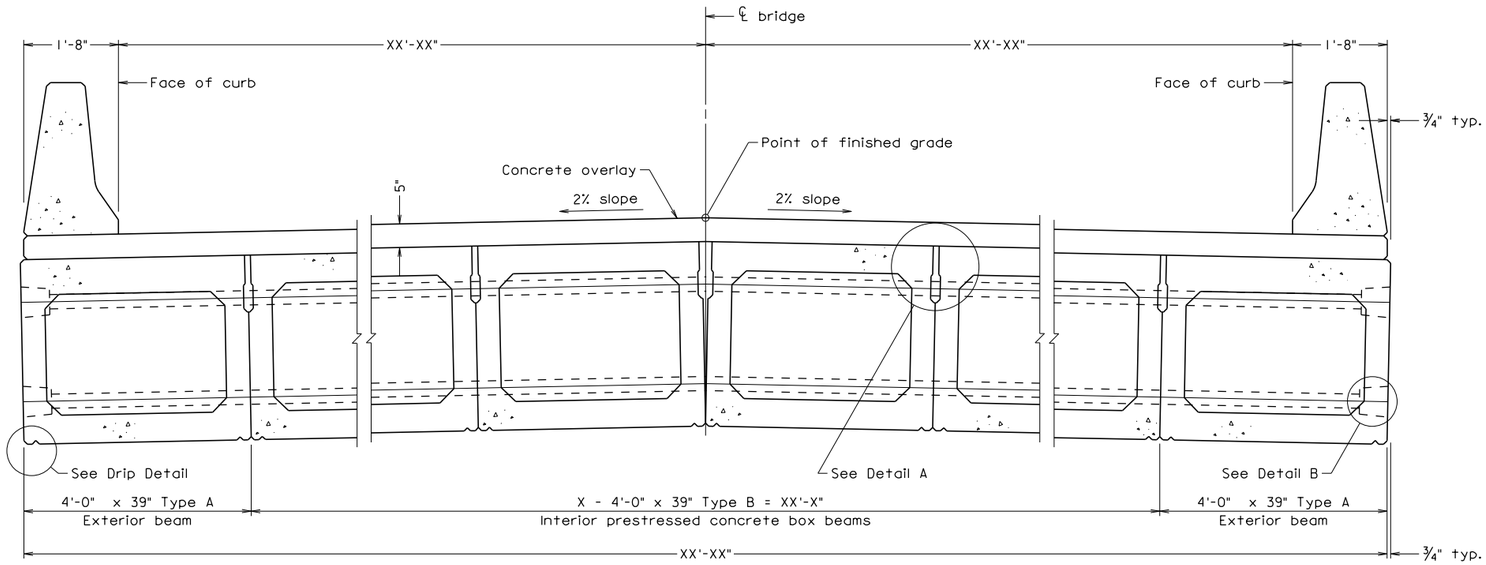


## TRANSVERSE SECTION

NOTES:

The bridge and roadway widths shown are nominal. Actual widths may vary due to fabrication and construction (gaps between boxes) tolerances.

Concrete for the overlay shall be Low Shrinkage Class A4 Modified having a minimum 28 day compressive strength of 4000 psi. Payment for the concrete overlay shall be made at the unit price for Concrete Class A4.

All reinforcing bars shall be Corrosion Resistant Reinforcing steel, Class __.

Top surfaces of all boxes shall be a clean concrete surface, free of laitance, with surface intentionally roughened to an amplitude of ¼".

Transverse tendons shall be ½" dia. coated, low-relaxation Grade 270 strand (Polystrand CP or equal) tensioned to 31,600 lbs. When the length of the strand used for transverse tendon is less than 20 feet, substitute a ⅞" dia. smooth rod conforming to ASTM A449 with 2½" long threaded ends tensioned to 30,000 lbs. for the ½" dia. strand. The rod shall have a washer and nut at each end. Rods, nuts, washers and 1" x 5" x 5" steel plates shall be galvanized.

Engineered Cementitious Composite concrete shall be furnished and placed in accordance with the current VDOT Special Provision for Engineered Cementitious Composite (ECC). The cost of the ECC shall be included in the cost of the prestressed concrete members.

All keyway surfaces shall be cleaned of all dirt, laitance and loose aggregate by means of sandblasting and pre-wetted prior to the grouting of shear keys.

All grouting of shear keys with ECC shall be done in one continuous operation without interruption for each span. Care shall be taken to prevent leakage of ECC into precast holes for transverse tendons or from bottoms of shear keys.

Post-tensioning of transverse tendons and the casting of parapets shall not be done until all grouting of keys are completed and the ECC has reached a minimum strength of 4000 psi.

For waterproofing details, see sheet __.

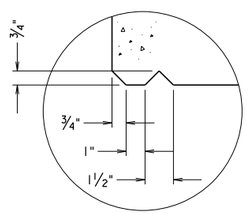


## DRIP DETAIL

Typ. each side of each member
Scale: 3" = 1'-0"

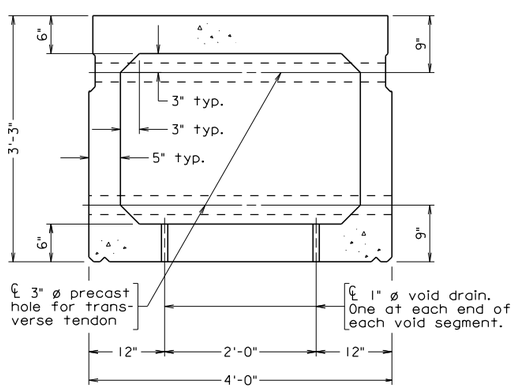


## TYPICAL INTERIOR SECTION TYPE B

Scale: 1" = 1'-0"

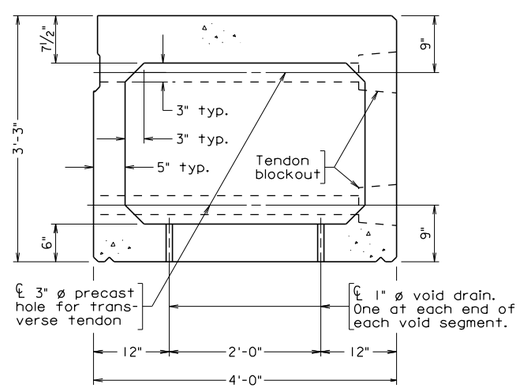


## TYPICAL EXTERIOR SECTION TYPE A

Scale: 1" = 1'-0"

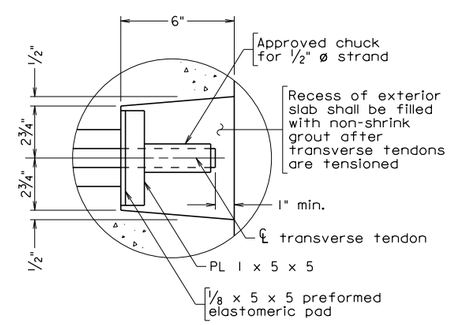


## DETAIL B

Scale: 3" = 1'-0"

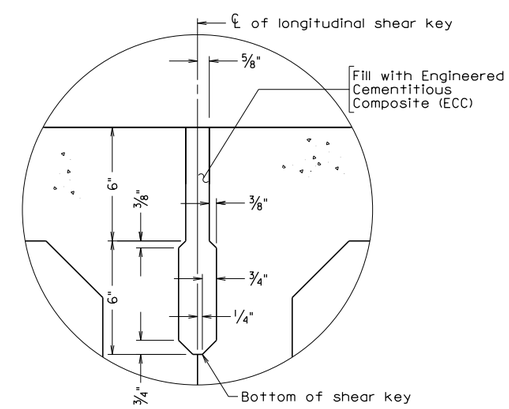


## DETAIL A

Overlay not shown
All shear key dimensions typ. each side
Scale: 3" = 1'-0"

Scale: ¾" = 1'-0" unless otherwise noted

©2016, Commonwealth of Virginia

PBT_2B.dgn

12-28-2016

PBT-2B

Sealed and Signed by:
Junyi Meng
Lic. No. 033572
On the date of
December 28, 2016

A copy of the original sealed and signed standard drawing is on file in the Central Office.

VDOT S&B DIVISION
RICHMOND, VA
STRUCTURAL ENGINEER

| No. | Description | Date |
|---|---|---|
| | Revisions | |

COMMONWEALTH OF VIRGINIA
DEPARTMENT OF TRANSPORTATION

STRUCTURE AND BRIDGE DIVISION

# TRANSVERSE AND TYPICAL SECTIONS; CONCRETE OVERLAY

Designed: S&B DIV
Drawn: S&B DIV
Checked: S&B DIV

Date

Plan No. PBT-2B

Sheet No.

## NOTES TO DESIGNER:

Include standard PBT-1, PBT-3, PBT-4 and PBT-6B in the plans when using this standard. Include standard PBT-5A in the plans when using F-shape parapet.

The designer shall ensure that the width of the pier cap or the seat of the abutment is sufficient for locating the anchor bolts.

The designer should avoid whenever possible the mixing of 3'-0" and 4'-0" wide beam sections.

For exterior beams, use thicker top flange to avoid conflicts and problems with reinforcing steel for some parapets/railings (e.g., F-shape).

The default cells provided on the sheet are for 4'-0" x 39" box beams. Transverse Section is shown for beams sloped to bridge crown, edge of beam falls on the bridge centerline and back of F-shape parapet aligned with the exterior edge of beam.

Cells for completing the standard are located in the PSC_BB.CEL library.

## ADD THE FOLLOWING NOTES, DIMENSIONS, DETAILS, ETC. TO STANDARD:

TRANSVERSE SECTION:

Enter dimensions from face of curb/rail to bridge centerline. Enter number of interior sections and total length of interior sections. Enter total width. Modify concrete overlay thickness where 7 ½" is used.

Modify F-shaped parapet position when not aligned with the edge of the exterior beam. Replace with sidewalk, rail, etc. as needed.

Where scale allows, detail the reinforcing steel bars in the concrete overlay. Where scale is not sufficient, add Part Detail on this sheet or provide on separate sheet with Deck Plan. See Part 2, File No. 12.06-3 for minimum reinforcement requirements.

Replace with appropriate cell for other depths/widths and where beams are level.

For stage construction, the Transverse Section shall be developed by the Designer. The Transverse Section may need to be drawn full width to properly show and dimension the location of the temporary barrier and a reduced scale may be necessary. An additional interior beam sheet is required and can be developed by providing an additional PBT-4 standard sheet in the plan set and modifying to provide the Type C details.

TYPICAL INTERIOR SECTION and TYPICAL EXTERIOR SECTION:

Where 4'-0" x 39" sections are not used, replace with appropriate sections from cell library. For stage construction, add Type C Section.

**ADD THE FOLLOWING NOTES, DIMENSIONS, DETAILS, ETC. TO STANDARD (cont'd):**

NOTES:

Complete second note by adding the Class I, II or III of corrosion resistant reinforcing steel required. For additional information on corrosion resistant reinforcing steel (CRR), see Structure and Bridge Division Instructional and Informational Memorandum (current IIM-S&B-81).

| STATE | FEDERAL AID ROUTE | FEDERAL AID PROJECT | STATE ROUTE | STATE PROJECT | SHEET NO. |
|---|---|---|---|---|---|
| VA. | — | | | | |

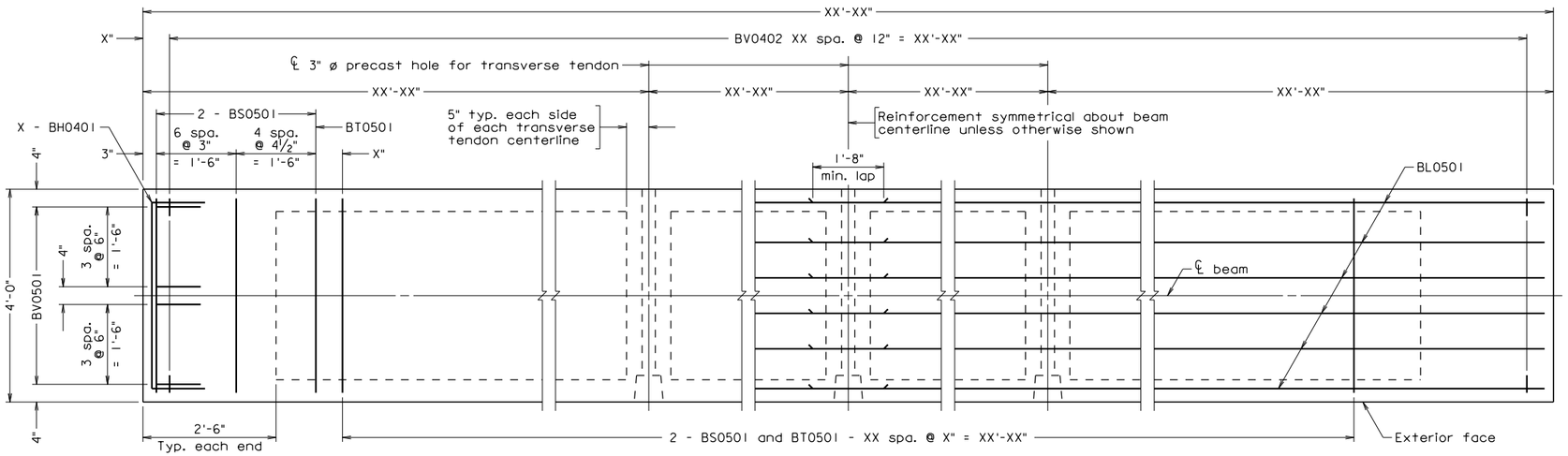


PLAN

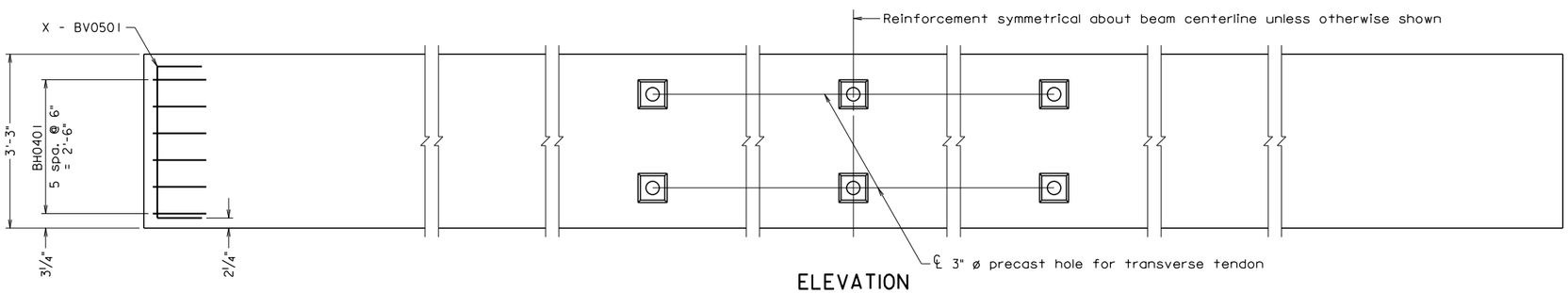


ELEVATION

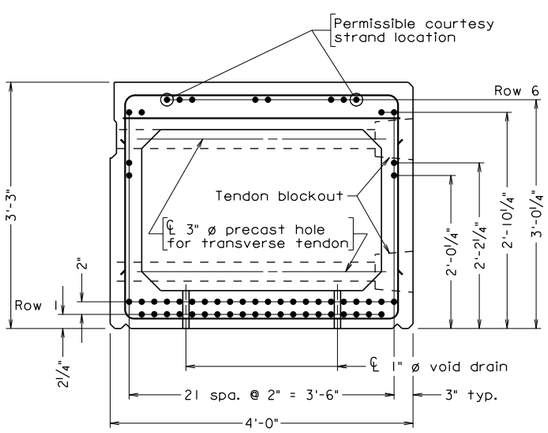


STRAND PATTERN

Scale: 1" = 1'-0"

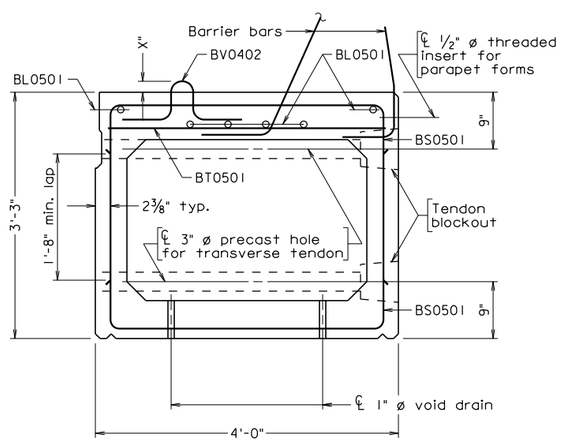


REINFORCING DETAILS

Scale: 1" = 1'-0"

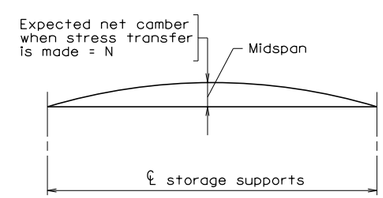


CAMBER DIAGRAM

Notes:

All reinforcing bars shall be Corrosion Resistant Reinforcing Steel, Class __.

BS series may be slighty shifted as directed by the Engineer to clear 3" ø hole for transverse tendon.

In lieu of splicing two reinforcing bars to form each stirrup, the stirrup may be made from one single bar.

The Contractor may submit an alternate prestressing strand pattern to the Engineer for approval.

The Contractor has the option of stressing two courtesy strands each to 8,000 lbs at the locations indicated.

Box corners damaged during construction shall be restored to their shape as shown on the plans by an approved epoxy mortar.

Contractor shall determine location and spacing of ½" ø threaded inserts for parapet forms.

Due to construction tolerances, adjustment to the bridge seat elevations may be needed. It is the Contractor's responsibility to make such adjustment as directed by the Engineer to insure the full bearing of the box on all the pads.

## REINFORCING STEEL SCHEDULE

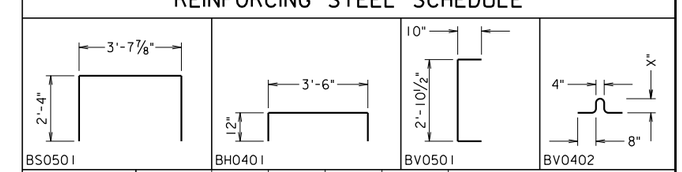


| Slab Size | Mark | No. | Size | Pin ø | Length | Location |
|---|---|---|---|---|---|---|
| 4'-0" x 39" Exterior beam Type A | BH0401 | | #4 | 2" | | End horizontal |
| | BL0501 | | #5 | — | | Top longitudinal |
| | BS0501 | | #5 | 2½" | | Stirrup |
| | BT0501 | | #5 | — | | Top transverse |
| | BV0501 | | #5 | 2½" | | End vertical |
| | BV0402 | | #4 | 3" | | Composite vertical |

Dimensions in bending diagram are out-to-out of bars.

Number of bars shown in table are per beam per beam type.

## PRESTRESSING STEEL DATA TABLE

| Strand Type | Slab Size | No. of strands per row: Row 1 | Row 2 | Row 3 | Row 4 | Row 5 | Row 6 | Distance from bottom of slab: Row 1 in. | Row 2 in. | Row 3 in. | Row 4 in. | Row 5 in. | Row 6 in. | Total number of strands per slab | Prestressing force per strand lbs. | Net camber N in. |
|---|---|---|---|---|---|---|---|---|---|---|---|---|---|---|---|---|
| 0.6" ø Low Relaxation Strands | 4'-0" x 39" Type A | | | | | | | | | | | | | | | |

Scale: ¾" = 1'-0" unless otherwise noted

©2016, Commonwealth of Virginia

| No. | Description | Date |
|---|---|---|
| | Revisions | |

COMMONWEALTH OF VIRGINIA
DEPARTMENT OF TRANSPORTATION

STRUCTURE AND BRIDGE DIVISION

# EXTERIOR BEAM TYPE A TRANSVERSE TENDONS

Designed: S&B DIV
Drawn: S&B DIV
Checked: S&B DIV

Date

Plan No. PBT-3

Sheet No.

Sealed and Signed by:
Junyi Meng
Lic. No. 033572
On the date of
December 28, 2016

A copy of the original sealed and signed standard drawing is on file in the Central Office.

VDOT S&B DIVISION
RICHMOND, VA
STRUCTURAL ENGINEER

12-28-2016

PBT-3

PBT_3.dgn

**PRESTRESSED CONCRETE AJACENT MEMBER STANDARD**
**BOX BEAMS – TRANSVERSE TENDONS**
**EXTERIOR BEAM – TYPE A**

**NOTES TO DESIGNER:**

Include standard PBT-1, PBT-2A or -2B, PBT-4 and PBT-6A or -6B in the plans when using this standard. Include standard PBT-5A in the plans when using F-shape parapet.

Cells for PLAN, ELEVATION, STRAND PATTERN AND REINFORCING DETAILS are provided for an exterior 4'-0" x 39" box beam. Replace with appropriate cells where other width or depth is used. Cells for completing the standard are located in the PSC_BB.CEL library.

All bar sizes, reinforcement spacing and strand positions provided in cells are input field holders and are to be adjusted as per design.

**ADD THE FOLLOWING NOTES, DIMENSIONS, DETAILS, ETC. TO STANDARD:**

PLAN:

Place appropriate PLAN from cell library. Adjust bar sizes and spacing per design.

Enter transverse tendon spacing. Cells detail tendons at quarter points for beams constrained from lateral movement by wing haunches cast tight against the beams. Remove tendon position at midspan for third points or both outside tendon positions for half point only. Add end tendon positions where beams are not constrained from lateral movement. See Part 2, Section 12.06, of this manual for tendon requirements. Note that 27" and 33" box beam depths require one transverse tendon per location. 39" and 42"depths require two tendons per location.

Where tendon positions are removed, show continuous void outlines.

Adjust end stirrup spacing as necessary and enter stirrup spacing throughout span.

Enter composite bar spacing or remove bars/dimensioning where composite bars are not used.

Remove BL series lap where not required.

For skews greater than 0 degrees, cells are not available and the PLAN shall be developed by the Designer to the actual skew.

ELEVATION:

Place appropriate ELEVATION from cell library. Adjust bar sizes and spacing per design. Adjust tendon positions to match PLAN view.

STRAND PATTERN:

Remove strands from positions not used per design. Adjust or add strand spacing dimensioning as needed per design. Courtesy strand positions must be on 2" x 2" grid established by position of bottom strands.

**ADD THE FOLLOWING NOTES, DIMENSIONS, DETAILS, ETC. TO STANDARD (cont'd):**

REINFORCING DETAILS:

Adjust bar sizes per design. Remove composite bars where not used. Coordinate longitudinal bars with strand positions shown in STRAND PATTERN to ensure conflicts do not occur.

PRESTRESSING STEEL DATA TABLE:

Complete table. Ensure table content matches number and position of strands shown in STRAND PATTERN.

REINFORCING STEEL SCHEDULE:

Update schedule for specific section and skew. Verify all dimensions per design requirements and adjust where necessary. Where smaller size bar is adequate per design, adjust size and dimensions accordingly.

## REINFORCING STEEL SCHEDULE

| Slab size | Mark | Size | Dimension A | | | | Dimension B |
|---|---|---|---|---|---|---|---|
| | | | Skew angle | | | | |
| | | | 0° | over 0° to 15° | over 15° to 30° | over 30° to 45° | |
| 3'-0" x all depths | BH0401 | #4 | | | | | |
| 4'-0" x all depths | BH0401 | #4 | | | | | |
| All slab sizes | BL0501 | #5 | Depends on beam length / whether splice req.'d | | | | ------ |
| 3'-0" x 27" | BS0501 | #5 | | | | | |
| 3'-0" x 33" | BS0501 | #5 | | | | | |
| 3'-0" x 39" | BS0501 | #5 | | | | | |
| 3'-0" x 42" | BS0501 | #5 | | | | | |
| 4'-0" x 27" | BS0501 | #5 | | | | | |
| 4'-0" x 33" | BS0501 | #5 | | | | | |
| 4'-0" x 39" | BS0501 | #5 | | | | | |
| 4'-0" x 42" | BS0501 | #5 | | | | | |
| 3'-0" x all depths | BT0501 | #5 | | | | | |
| 4'-0" x all depths | BT0501 | #5 | | | | | |
| 3'-0" / 4'-0" x 27"" | BV0501 | #5 | | | | | |
| 3'-0" / 4'-0" x 33" | BV0501 | #5 | | | | | |
| 3'-0" / 4'-0" x 39" | BV0501 | #5 | | | | | |
| 3'-0" / 4'-0" x 42" | BV0501 | #5 | | | | | |
| All slab sizes | BV0402 | #4 | | | | | |

**ADD THE FOLLOWING NOTES, DIMENSIONS, DETAILS, ETC. TO STANDARD (cont'd):**

NOTES:

Complete corrosion resistant reinforcing steel note by adding the required Class. See Structure and Bridge Division Instructional and Informational Memorandum (current IIM-S&B-81).

ANCHOR DETAIL and ALTERNATE ANCHOR DETAIL:

Where the ends of prestessed concrete box beams are not constrained or buoyancy will cause uplift of the superstructure, add the details and notes from the cell library to this sheet. If insufficient room, move them to another sheet.

| STATE | FEDERAL AID ROUTE | FEDERAL AID PROJECT | STATE ROUTE | STATE PROJECT | SHEET NO. |
|---|---|---|---|---|---|
| VA. | — | | | | |

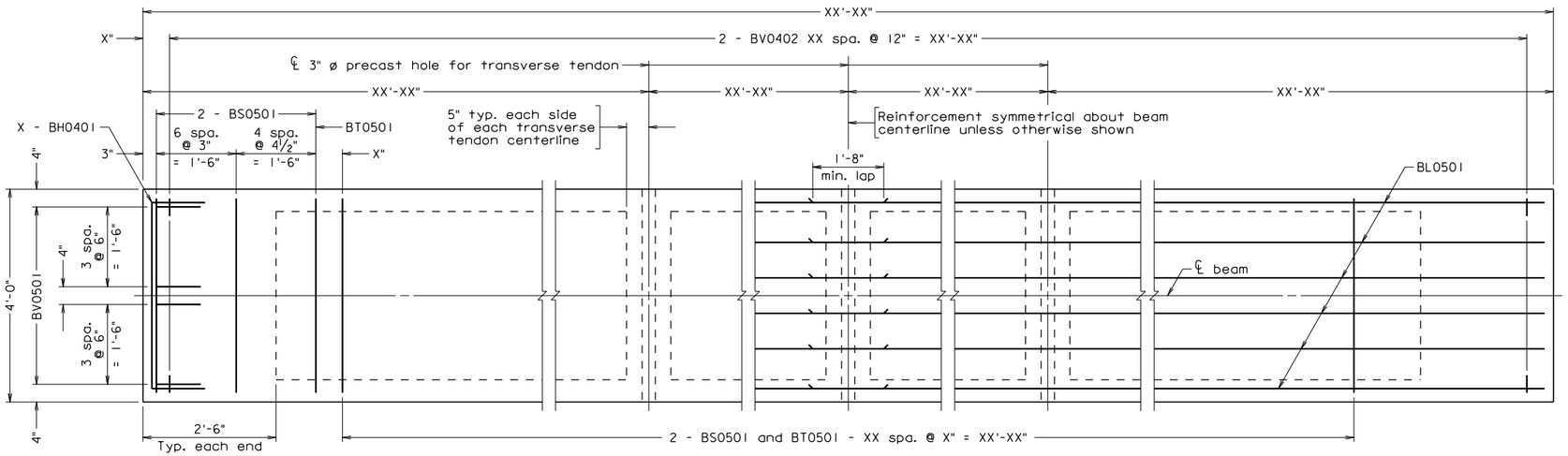


PLAN

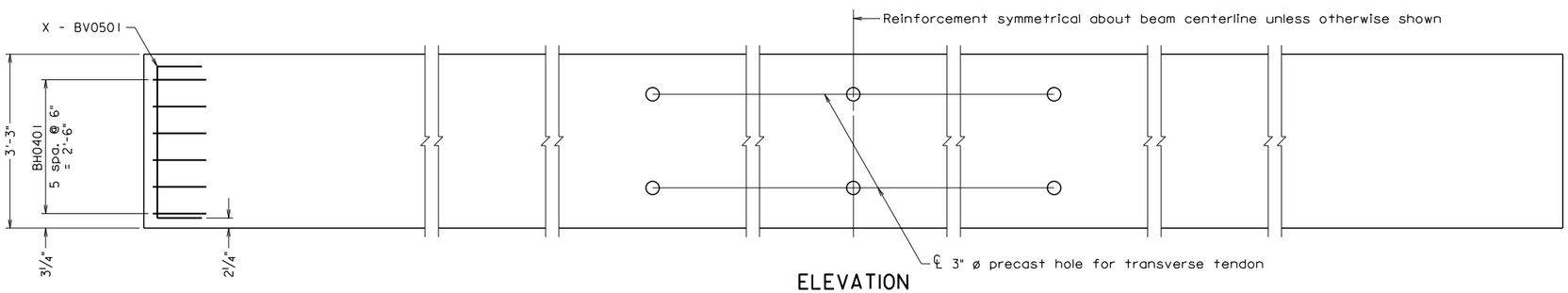


ELEVATION

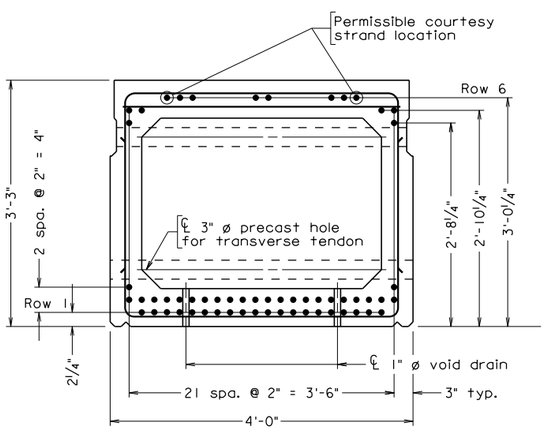


STRAND PATTERN

Scale: 1" = 1'-0"

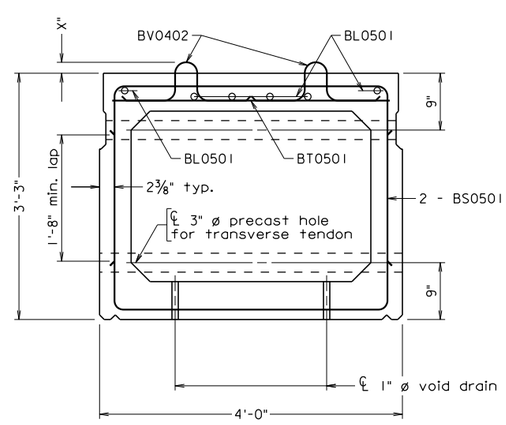


REINFORCING DETAILS

Scale: 1" = 1'-0"

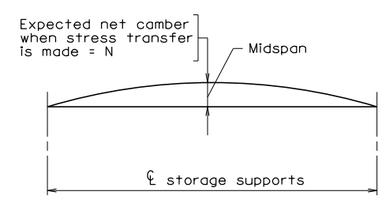


CAMBER DIAGRAM

Scale: ¾" = 1'-0" unless otherwise noted

## PRESTRESSING STEEL DATA TABLE

| Strand Type | Slab Size | No. of strands per row: Row 1 | Row 2 | Row 3 | Row 4 | Row 5 | Row 6 | Distance from bottom of slab: Row 1 in. | Row 2 in. | Row 3 in. | Row 4 in. | Row 5 in. | Row 6 in. | Total number of strands per slab | Prestressing force per strand lbs. | Net camber N in. |
|---|---|---|---|---|---|---|---|---|---|---|---|---|---|---|---|---|
| 0.6" ø Low Relaxation Strands | 4'-0" x 39" Type B | | | | | | | | | | | | | | | |

Notes:

All reinforcing bars shall be Corrosion Resistant Reinforcing Steel, Class __.

BS series may be slighty shifted as directed by the Engineer to clear 3" ø hole for transverse tendon.

In lieu of splicing two reinforcing bars to form each stirrup, the stirrup may be made from one single bar.

The Contractor may submit an alternate prestressing strand pattern to the Engineer for approval.

The Contractor has the option of stressing two courtesy strands each to 8,000 lbs at the locations indicated.

Box corners damaged during construction shall be restored to their shape as shown on the plans by an approved epoxy mortar.

Due to construction tolerances, adjustment to the bridge seat elevations may be needed. It is the Contractor's responsibility to make such adjustment as directed by the Engineer to insure the full bearing of the box on all the pads.

## REINFORCING STEEL SCHEDULE

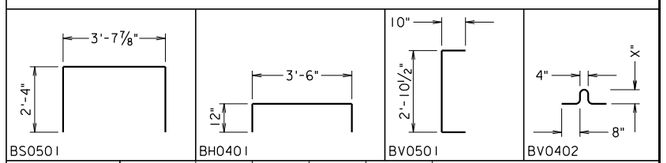


| Slab Size | Mark | No. | Size | Pin ø | Length | Location |
|---|---|---|---|---|---|---|
| 4'-0" x 39" Interior beam Type B | BH0401 | | #4 | 2" | | End horizontal |
| | BL0501 | | #5 | — | | Top longitudinal |
| | BS0501 | | #5 | 2½" | | Stirrup |
| | BT0501 | | #5 | — | | Top transverse |
| | BV0501 | | #5 | 2½" | | End vertical |
| | BV0402 | | #4 | 3" | | Composite vertical |

Dimensions in bending diagram are out-to-out of bars.

Number of bars shown in table are per beam per beam type.

| No. | Description | Date |
|---|---|---|
| | | |

Revisions

COMMONWEALTH OF VIRGINIA
DEPARTMENT OF TRANSPORTATION

STRUCTURE AND BRIDGE DIVISION

# INTERIOR BEAM TYPE B TRANSVERSE TENDONS

Designed: S&B DIV
Drawn: S&B DIV
Checked: S&B DIV

Date

Plan No. PBT-4

Sheet No.

©2016, Commonwealth of Virginia

PBT_4.dgn

12-28-2016

Sealed and Signed by:
Junyi Meng
Lic. No. 033572
On the date of
December 28, 2016

A copy of the original sealed and signed standard drawing is on file in the Central Office.

VDOT S&B DIVISION
RICHMOND, VA
STRUCTURAL ENGINEER

PBT-4

**PRESTRESSED CONCRETE AJACENT MEMBER STANDARD**
**BOX BEAMS – TRANSVERSE TENDONS**
**INTERIOR BEAM – TYPE B**

**NOTES TO DESIGNER:**

Include standard PBT-1, PBT-2A or -2B, PBT-3 and PBT-6A or -6B in the plans when using this standard. Include standard PBT-5A in the plans when using F-shape parapet.

Cells for PLAN, ELEVATION, STRAND PATTERN AND REINFORCING DETAILS are provided for an interior 4'-0" x 39" BOX BEAM. Replace with appropriate cells where other width or depth is used. Cells for completing the standard are located in the PSC_BB.CEL library.

All bar sizes, reinforcement spacing and strand positions provided in cells are input field holders and are to be adjusted as per design.

**ADD THE FOLLOWING NOTES, DIMENSIONS, DETAILS, ETC. TO STANDARD:**

PLAN:

Place appropriate PLAN from cell library. Adjust bar sizes and spacing per design.

Enter transverse tendon spacing. Cells detail tendons at quarter points for beams constrained from lateral movement by wing haunches cast tight against the beams. Remove tendon position at midspan for third points or both outside tendon positions for half point only. Add end tendon positions where beams are not constrained from lateral movement. See Part 2, Section 12.06, of this manual for tendon requirements. Note that 27" and 33" box beam depths require one transverse tendon per location. 39" and 42" require two tendons per location.

Where tendon positions are removed, show continuous void outlines.

Adjust end stirrup spacing as necessary and enter stirrup spacing throughout span.

Enter composite bar spacing or remove bars/dimensioning where composite bars are not used.

Remove BL series lap where not required.

For skews greater than 0 degrees, cells are not available and the PLAN shall be developed by the Designer to the actual skew.

ELEVATION:

Place appropriate ELEVATION from cell library. Adjust bar sizes and spacing per design. Adjust tendon positions to match PLAN view.

STRAND PATTERN:

Remove strands from positions not used per design. Adjust or add strand spacing dimensioning as needed per design. Courtesy strand positions must be on 2" x 2" grid established by position of bottom strands.

**PRESTRESSED CONCRETE ADJACENT MEMBER STANDARD**
**BOX BEAMS – TRANSVERSE TENDONS**
**INTERIOR BEAM – TYPE B**

**ADD THE FOLLOWING NOTES, DIMENSIONS, DETAILS, ETC. TO STANDARD (cont'd):**

REINFORCING DETAILS:

Adjust bar sizes per design. Remove composite bars where not used. Coordinate longitudinal bars with strand positions shown in STRAND PATTERN to ensure conflicts do not occur.

PRESTRESSING STEEL DATA TABLE:

Complete table. Ensure table content matches number and position of strands shown in STRAND PATTERN.

REINFORCING STEEL SCHEDULE:

Update schedule for specific section and skew. Verify all dimensions per design requirements and adjust where necessary. Where smaller size bar is adequate per design, adjust size and dimensions accordingly.

## REINFORCING STEEL SCHEDULE

| Slab size | Mark | Size | Dimension A | | | | Dimension B |
|---|---|---|---|---|---|---|---|
| | | | Skew angle | | | | |
| | | | 0° | over 0° to 15° | over 15° to 30° | over 30° to 45° | |
| 3'-0" x all depths | BH0401 | #4 | | | | | |
| 4'-0" x all depths | BH0401 | #4 | | | | | |
| All slab sizes | BL0501 | #5 | Depends on beam length / whether splice req.'d | | | | ------ |
| 3'-0" x 27" | BS0501 | #5 | | | | | |
| 3'-0" x 33" | BS0501 | #5 | | | | | |
| 3'-0" x 39" | BS0501 | #5 | | | | | |
| 3'-0" x 42" | BS0501 | #5 | | | | | |
| 4'-0" x 27" | BS0501 | #5 | | | | | |
| 4'-0" x 33" | BS0501 | #5 | | | | | |
| 4'-0" x 39" | BS0501 | #5 | | | | | |
| 4'-0" x 42" | BS0501 | #5 | | | | | |
| 3'-0" x all depths | BT0501 | #5 | | | | | |
| 4'-0" x all depths | BT0501 | #5 | | | | | |
| 3'-0" / 4'-0" x 27"" | BV0501 | #5 | | | | | |
| 3'-0" / 4'-0" x 33" | BV0501 | #5 | | | | | |
| 3'-0" / 4'-0" x 39" | BV0501 | #5 | | | | | |
| 3'-0" / 4'-0" x 42" | BV0501 | #5 | | | | | |
| All slab sizes | BV0402 | #4 | | | | | |

NOTES:

Complete corrosion resistant reinforcing steel note by adding the required Class. See Structure and Bridge Division Instructional and Informational Memorandum (current IIM-S&B-81).

| STATE | FEDERAL AID ROUTE | FEDERAL AID PROJECT | STATE ROUTE | STATE PROJECT | SHEET NO. |
|---|---|---|---|---|---|
| VA. | — | | | | |

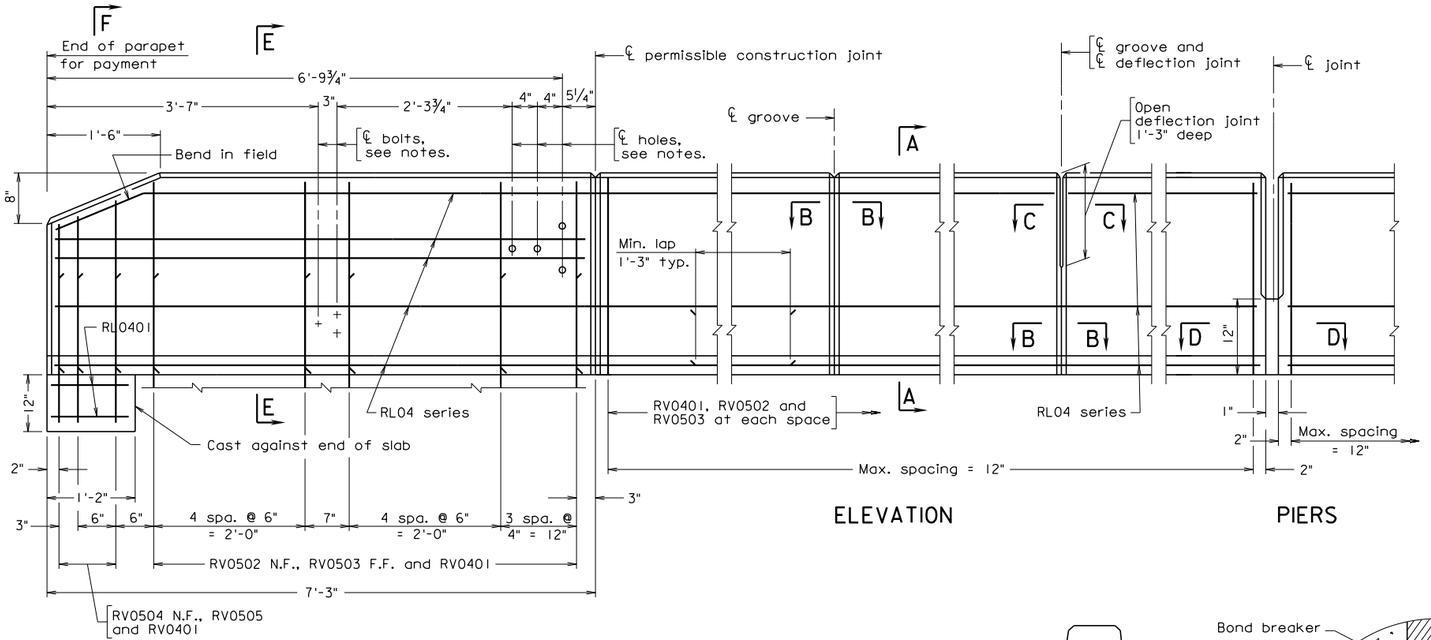


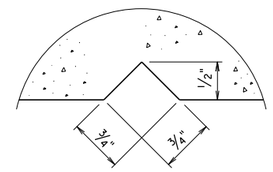


SECTION B-B
Full Scale
Groove detail for both sides of parapet.

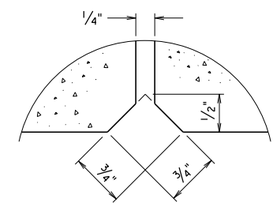


SECTION C-C
Full Scale
Deflection joint detail for both sides of parapet

Notes:

Rounded edges with 1" radius may be used in lieu of bevels along top of parapet.

All reinforcing bars shall be Corrosion Resistant Reinforcing Steel, Class __.

Spacing of grooves to be approximately 8'-0". Spacing of deflection joints shall not exceed three groove spaces.

Barrier delineator size, color, and spacing to be in accordance with the Specifications. Cost of delineator to be included in the price bid for parapet. Reflective surface of barrier delineator, in all instances, to be facing oncoming traffic.

The Contractor shall determine all dimensions and details necessary for installation.

All concrete shall be Class A4.

Terminal walls are detailed to take guardrail attachment GR-FOA-2.

Holes, where shown, shall be formed with sleeves of 1½" dia. nominal pipe.

Bolts, where shown, shall be ⅝" dia. expansion anchor bolts, 6" long to be drilled and installed when rub rail is attached.

Plan dimensions shown are measured in the respective horizontal and vertical planes. The reinforcing steel shown has been detailed based on a standard ¼" per foot cross slope and a 8½" slab depth. The Contractor shall adjust the reinforcing steel as required for other cross slopes and slab depths.

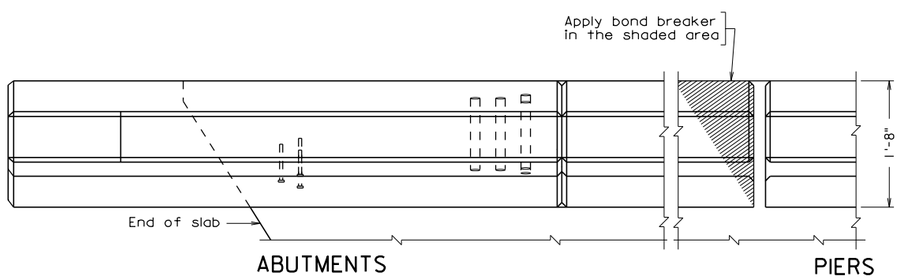


PART PLAN
TYPICAL FOR SKEWED CROSSING

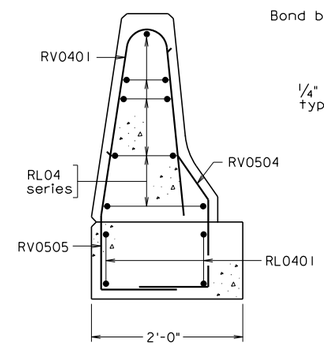


SECTION F-F
For details not shown, see Section A-A.

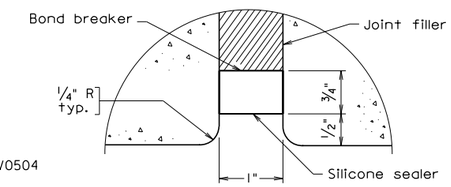


SECTION D-D
Full Scale
Joint detail for both sides of parapet

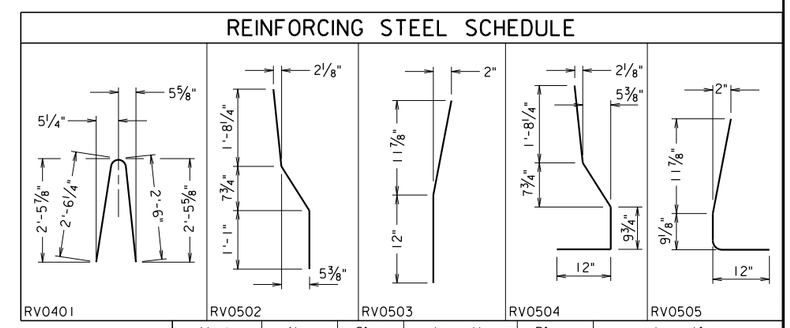


| Mark | No. | Size | Length | Pin ø | Location |
|---|---|---|---|---|---|
| RV0401 | · | #4 | 5'-2" | 4½" | Parapet |
| RV0502 | · | #5 | 3'-7" | 3¾" | Parapet |
| RV0503 | · | #5 | 2'-0" | 3¾" | Parapet |
| RV0504 | · | #5 | 4'-2" | 3¾" | Parapet |
| RV0505 | · | #5 | 2'-7" | 3¾" | Parapet |
| RL0401 | · | #4 | 1'-9" | — | Parapet |
| RL04 | · | #4 | · | — | Parapet |
| · | · | · | · | · | · |
| · | · | · | · | · | · |
| · | · | · | · | · | · |

Dimensions in bending diagram are out to out of bars, except as shown.

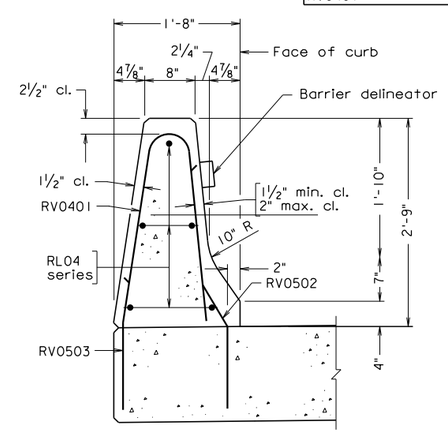


SECTION A-A

Gross concrete quantities (C.Y.) = Lin. ft. x 0.110 for all concrete above roadway slab.

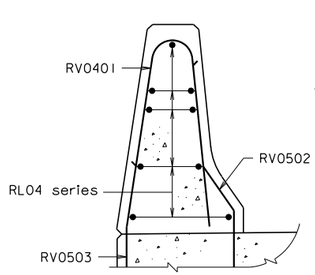


SECTION E-E
Holes and bolts not shown. For details not shown, see Section A-A.

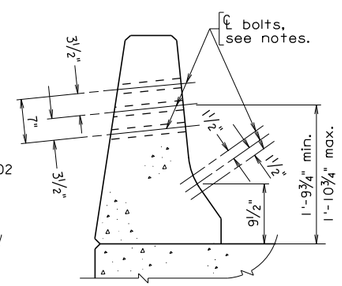


SECTION E-E
Reinforcing steel not shown

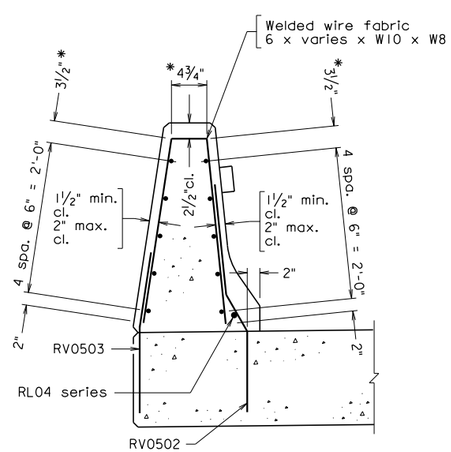


*Dimensions are out-to-out of wires.

SECTION A-A
ALTERNATE REINFORCING STEEL

Scale: 1" = 1'-0" unless otherwise noted

©2012, Commonwealth of Virginia

| No. | Description | Date |
|---|---|---|
| | | |
| | | |
| | | |
| | | |
| | | |
| | | |
| | | |
| | | |

Revisions

COMMONWEALTH OF VIRGINIA
DEPARTMENT OF TRANSPORTATION

STRUCTURE AND BRIDGE DIVISION

# CAST-IN-PLACE CONCRETE PARAPET (F-SHAPE)

| Designed: ..... | Date | Plan No. | Sheet No. |
|---|---|---|---|
| Drawn: ..... | | PBT-5A | |
| Checked: ..... | | | |

PBT-5A

08-07-2012

PBT_5A.dgn

Sealed and Signed by:
Julius F.J. Volgyi Jr.
Lic. No. 010487
On the date of
Aug. 7, 2012

A copy of the original sealed and signed standard drawing is on file in the Central Office.

VDOT S&B DIVISION
RICHMOND, VA
STRUCTURAL ENGINEER

**PRESTRESSED CONCRETE ADJACENT MEMBER STANDARD**
**BOX BEAMS – TRANSVERSE TENDONS**
**CAST-IN-PLACE PARAPET (F-SHAPE)**

**NOTES TO DESIGNER:**

Standard is to be used as an insertable sheet when F-shape parapets are used.

Terminal wall is detailed on abutment.

Designer shall modify bars to fit within the top slab of the box beam.

If an initial bituminous overlay is used on the bridge at the time of construction, vertical dimensions and dimensions for reinforcing steel may need to be adjusted The vertical dimensions and dimensions for reinforcing steel shown on this standard are established from the top of the roadway surface for a 1" thick bituminous overlay at the face of parapet curb, $^1/_4$" per foot cross slope and a 15" slab depth.

If the thickness of the bituminous overlay at the face of parapet curb is greater than 1", vertical dimensions and dimensions for reinforcing steel will need to be adjusted. For example if a 2" overlay at the curb is set, the 4" curb dimension and the overall 2'-9" height of the parapet would need to be adjusted to 5" and 2'-10" respectively (Section A-A). In addition, the $9^1/_2$" and 1'-10" height of the bolts would need to be adjusted to $10^1/_2$" and 1'-11" respectively (Section E-E).

**ADD THE FOLLOWING NOTES, DIMENSIONS, DETAILS, ETC. TO STANDARD:**

SECTION A-A:

Modify vertical dimensions (4" curb and 2'-9" parapet height) as noted above if an initial overlay is used on bridge.

SECTION E-E:

Modify vertical dimensions ($9^1/_2$" curb and 1'-10" bolt locations) as noted above if an initial overlay is used on bridge.

REINFORCING STEEL SCHEDULE:

Modify bars if needed due to slab depth, cross slope or initial overlay if used on bridge.

NOTES:

Complete second note by adding the Class I, II or III of corrosion resistant reinforcing steel required. For additional information on corrosion resistant reinforcing steels (CRR), see Structure and Bridge Division Instructional and Informational Memorandum (current IIM-S&B-81).

| STATE | FEDERAL AID ROUTE | FEDERAL AID PROJECT | STATE ROUTE | STATE PROJECT | SHEET NO. |
|---|---|---|---|---|---|
| VA. | — | | | | |

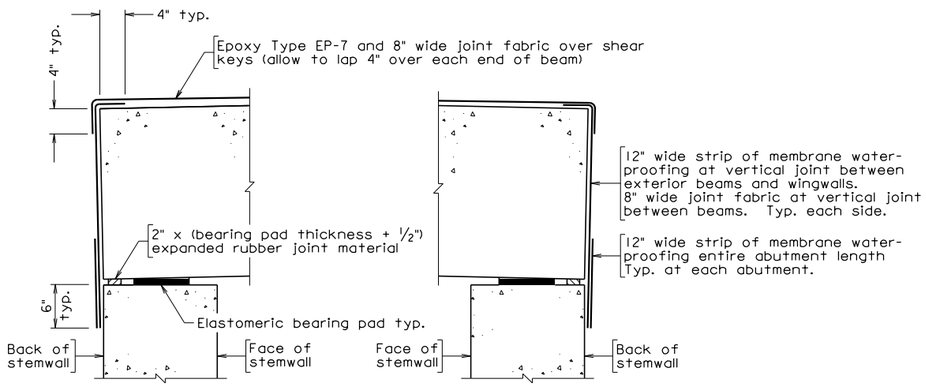


ABUTMENT A ABUTMENT B

## WATERPROOFING MEMBRANE DETAIL

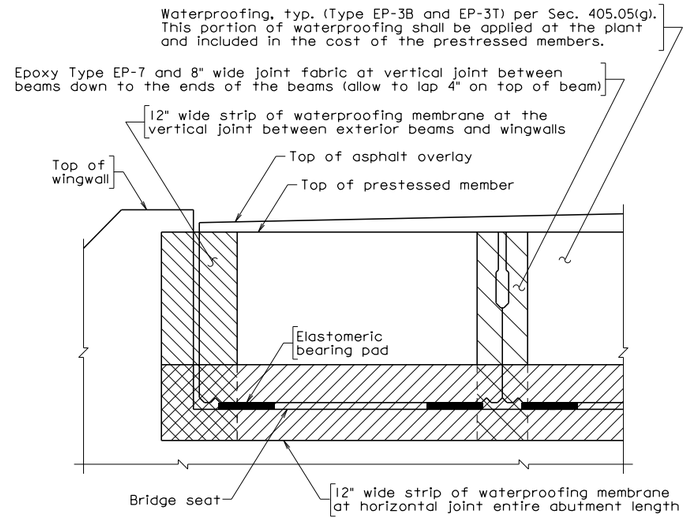


## END OF BEAM VIEW AT ABUTMENTS

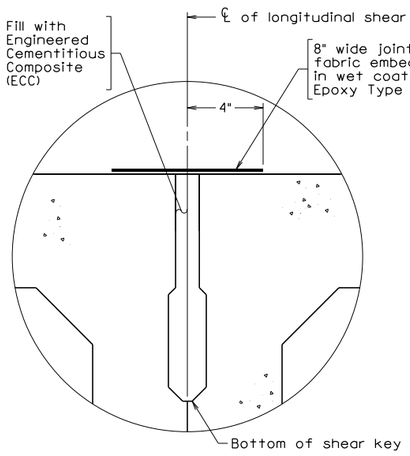


## SHEAR KEY DETAIL

Overlay not shown
Scale: 3" = 1'-0"

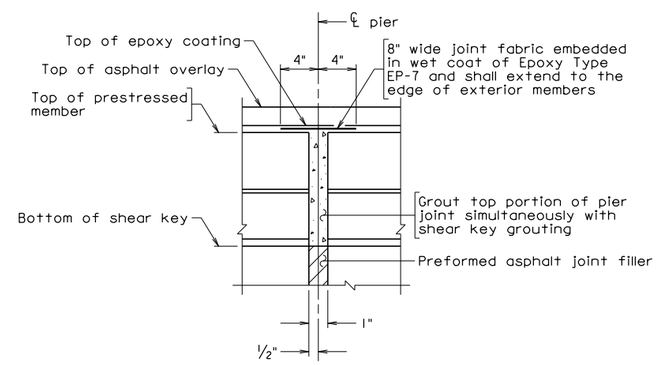


## SECTION THRU PIER JOINTS

Typical all pier joints
Normal to joint
Not to scale

Notes:

Details shown for 4'-0" x 27" prestressed concrete box beam. Details similar for other widths and depths.

Procedure for sealing shear keys and pier joint utilizing Epoxy EP-7 and joint fabric:

Surface preparation, application guidelines, Epoxy EP-7 and sand shall be in accordance with Section 431 of the 2016 Road and Bridge Specifications.

1. Prepare deck surface.

2. Apply a coat of epoxy to the beam ends at the shear keys and then set the joint fabric into the wet epoxy. Allow enough joint fabric to provide for a 4" min. lap on top of beams. Apply additional epoxy over the jont fabric to thoroughly wet the joint fabric. Remove any air pockets under the joint fabric using a short nap paint roller.

3. Apply the first coat of epoxy to beam surface over the grouted shear keys and set the joint fabric (continuous over pier joints) into the wet epoxy. Allow enough joint fabric to provide for a 4" min. lap down the beam ends. Apply additional epoxy over the joint fabric to thoroughly wet the joint fabric and provide sufficient free epoxy to engage the sand. Remove any air pockets under the joint fabric using a short nap paint roller. Apply sand and allow epoxy and sand to cure and then remove loose sand.

4. Apply the first coat of epoxy and sand on the remaining deck surface including pier joint (areas between shear keys). Remove loose sand after epoxy has cured. This will complete the first coat of epoxy overlay.

5. Apply a second coat of epoxy over pier joint and set the joint fabric into the wet epoxy. Apply additional epoxy over the joint fabric to thoroughly wet the joint fabric and provide sufficient free epoxy to engage the sand. Remove any air pockets under the joint fabric using a short nap paint roller. Apply sand and allow epoxy and sand to cure and then remove loose sand.

6. Apply second coat of epoxy and sand, covering remaining surface of deck including shear keys. Remove loose sand after the epoxy has cured.

7. Any epoxy spills outside the limits of the shear key treatment shall be covered with sand while the epoxy is still wet.

The cost of Epoxy Type EP-7, sand and joint fabric shall be included in the cost of the prestressed members.

Joint fabric from the VDOT Special Products Evaluation List under Joint Fabrics shall be used.

Notes for End of Beam Membrane Waterproofing:

The membrane shall be applied to the end of beams at abutments at the vertical joint between exterior beams and wingwalls and the horizontal joint as shown in END OF BEAM VIEW AT ABUTMENTS.

The membrane shall consist of a Type III preformed membrane system in accordance with Section 429 of the 2016 Road and Bridge Specifications. The cost of the membrane shall be included in the cost of the prestressed members.

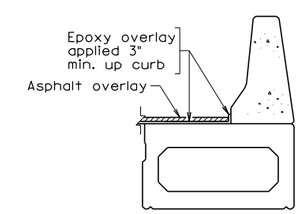


## SECTION THRU PARAPET

Scale: ½" = 1'-0"

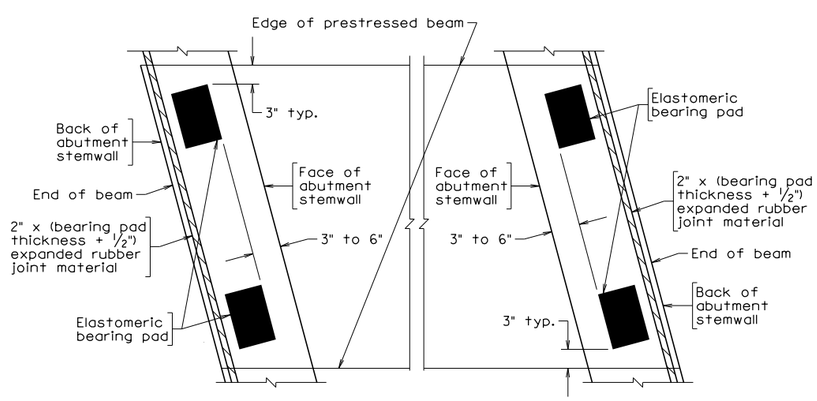


PART PLAN AT ABUTMENT A PART PLAN AT ABUTMENT B

## END BEARING DETAILS

Scale: 1" = 1'-0" unless otherwise shown

©2016, Commonwealth of Virginia

PBT_6A.dgn

12-28-2016

PBT-6A

Sealed and Signed by:
Junyi Meng
Lic. No. 033572
On the date of
December 28, 2016

A copy of the original sealed and signed standard drawing is on file in the Central Office.

VDOT S&B DIVISION
RICHMOND, VA
STRUCTURAL ENGINEER

| No. | Description | Date |
|---|---|---|
| | | |
| | | |
| | | |
| | | |
| | | |
| | | |
| | | |
| | Revisions | |

COMMONWEALTH OF VIRGINIA
DEPARTMENT OF TRANSPORTATION

STRUCTURE AND BRIDGE DIVISION

# END BEARING AND WATERPROOFING DETAILS FOR ASPHALT OVERLAY

| Designed: S&B DIV | Date | Plan No. | Sheet No. |
|---|---|---|---|
| Drawn: S&B DIV | | PBT-6A | |
| Checked: S&B DIV | | | |

**PRESTRESSED CONCRETE ADJACENT MEMBER STANDARD**
**BOX BEAMS – TRANSVERSE TENDONS**
**WATERPROOFING DETAILS FOR ASPHALT OVERLAY**

**NOTES TO DESIGNER:**

Include standard PBT-1, PBT-2A, PBT-3 and PBT-4 in the plans when using this standard.

Include standard PBT-5A in the plans when using F-shape parapet.

Details are shown for 4'-0" x 27" prestressed concrete box beams. Details are similar for other widths and depths and alterations are not necessary unless indicated below. Remove scales from details and indicate sheet is Not to Scale at bottom when other widths and depths are used. Scales are shown on the standard sheet to assist Designers when detail changes are necessary.

Cells for completing the standard are located in the PSC_BB.CEL library.

**ADD THE FOLLOWING NOTES, DIMENSIONS, DETAILS, ETC. TO STANDARD:**

WATERPROOFING MEMBRANE DETAIL:

Modify abutment or bearing details as necessary.

END OF SLAB VIEW AT ABUTMENTS:

Modify details when necessary to convey waterproofing membrane limits due to abutment details.

SECTION THRU PIER JOINTS:

Do not remove detail for bridges without piers. Modify the detail when sleeves through the beam ends for anchor bolts are used at fixed bearing locations.

SECTION THRU PARAPET:

Replace with parapet or other rail as needed.

END BEARING DETAILS:

Modify details as necessary where laminated elastomeric bearings are used to account for grade, skew or longer expansion lengths. Where grades exceed 1 percent and laminated elastomeric bearings are not used, add cell for SLABS ON GRADIENT IN EXCESS OF 1% to standards PBT -3 and -4.

NOTES:

Do not alter procedure for bridges without piers.

| STATE | FEDERAL AID ROUTE | FEDERAL AID PROJECT | STATE ROUTE | STATE PROJECT | SHEET NO. |
|---|---|---|---|---|---|
| VA. | — | | | | |

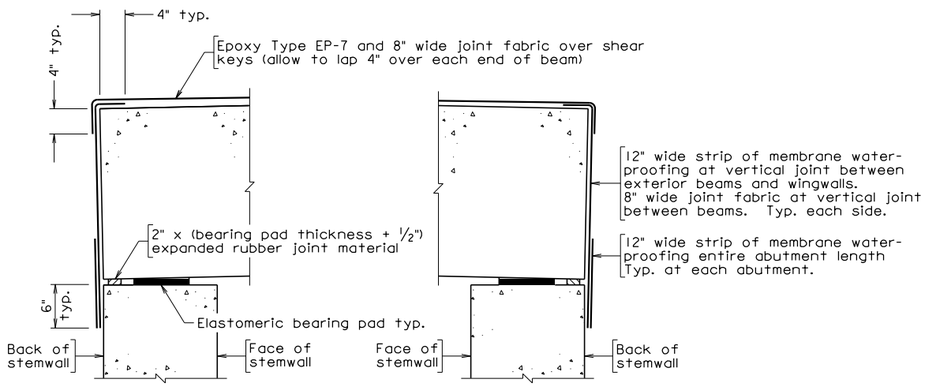


WATERPROOFING MEMBRANE DETAIL

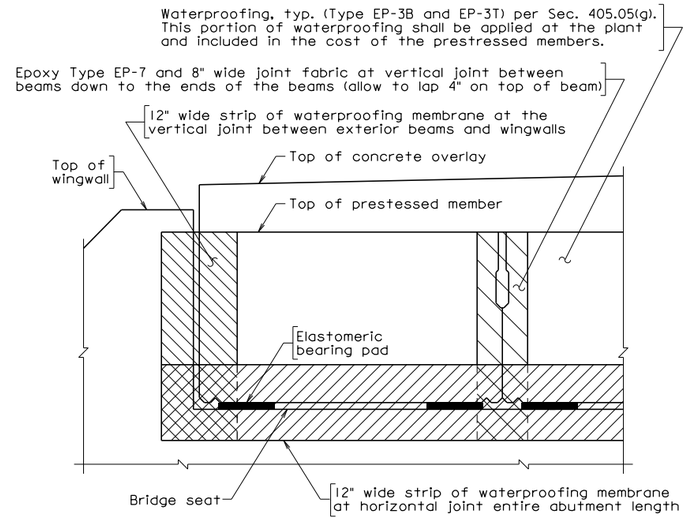


END OF BEAM VIEW AT ABUTMENTS

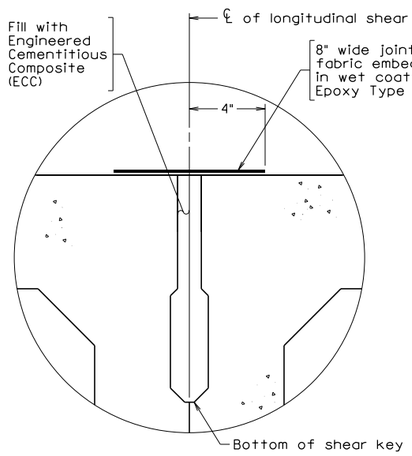


SHEAR KEY DETAIL

Overlay not shown
Scale: 3" = 1'-0"

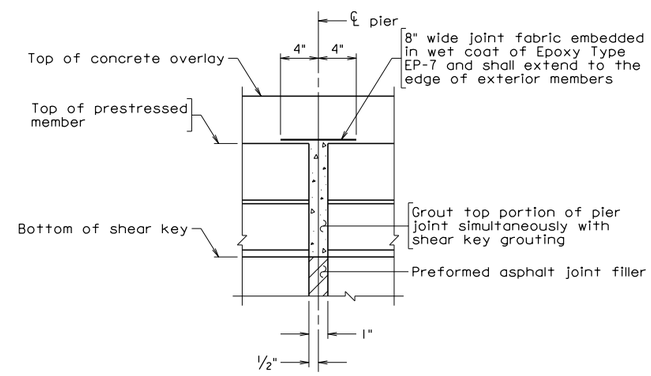


SECTION THRU PIER JOINTS

Typical all pier joints
Normal to joint
Not to scale

Notes:

Details shown for 4'-0" x 27" prestressed concrete box beam. Details similar for other widths and depths.

Procedure for sealing shear keys and pier joint utilizing Epoxy EP-7 and joint fabric:

Surface preparation, application guidelines, Epoxy EP-7 and sand shall be in accordance with Section 431 of the 2016 Road and Bridge Specifications.

1. Prepare deck surface.

2. Apply a coat of epoxy to the beam ends at the shear keys and then set the joint fabric into the wet epoxy. Allow enough joint fabric to provide for a 4" min. lap on top of beams. Apply additional epoxy over the joint fabric to thoroughly wet the joint fabric. Remove any air pockets under the joint fabric using a short nap paint roller.

3. Apply the first coat of epoxy to beam surface over the grouted shear keys and set the joint fabric (continuous over pier joints) into the wet epoxy. Allow enough joint fabric to provide for a 4" min. lap down the beam ends. Apply additional epoxy over the joint fabric to thoroughly wet the joint fabric and provide sufficient free epoxy to engage the sand. Remove any air pockets under the joint fabric using a short nap paint roller. Apply sand and allow epoxy and sand to cure and then remove loose sand.

4. Apply the first coat of epoxy over pier joint and set the joint fabric into the wet epoxy. Apply additional epoxy over the joint fabric to thoroughly wet the joint fabric and provide sufficient free epoxy to engage the sand. Remove any air pockets under the joint fabric using a short nap paint roller. Apply sand and allow epoxy and sand to cure and then remove loose sand.

5. Apply a second coat of epoxy and sand over shear keys and pier joint. Remove loose sand after epoxy has cured.

6. Any epoxy spills outside the limits of the shear key treatment shall be covered with sand while the epoxy is still wet.

The cost of Epoxy Type EP-7, sand and joint fabric shall be included in the cost of the prestressed members.

Joint fabric from the VDOT Special Products Evaluation List under Joint Fabrics shall be used.

Notes for End of Beam Membrane Waterproofing:

The membrane shall be applied to the end of beams at abutments at the vertical joint between exterior beams and wingwalls and the horizontal joint as shown in END OF BEAM VIEW AT ABUTMENTS.

The membrane shall consist of a Type III preformed membrane system in accordance with Section 429 of the 2016 Road and Bridge Specifications. The cost of the membrane shall be included in the cost of the prestressed members.

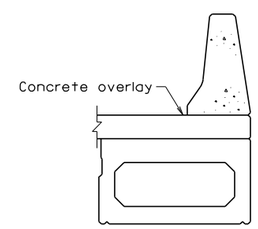


SECTION THRU PARAPET

Scale: ½" = 1'-0"

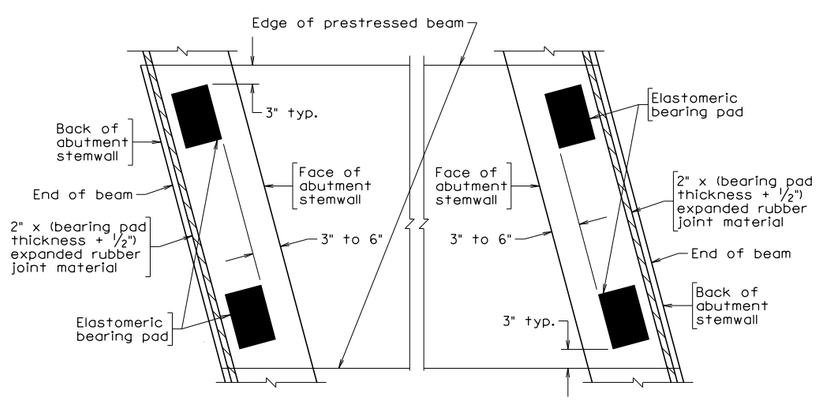


PART PLAN AT ABUTMENT A

PART PLAN AT ABUTMENT B

END BEARING DETAILS

Scale: 1" = 1'-0" unless otherwise shown

©2016, Commonwealth of Virginia

PBT_6B.dgn

12-28-2016

PBT-6B

Sealed and Signed by:
Junyi Meng
Lic. No. 033572
On the date of
December 28, 2016

A copy of the original sealed and signed standard drawing is on file in the Central Office.

VDOT S&B DIVISION
RICHMOND, VA
STRUCTURAL ENGINEER

| No. | Description | Date |
|---|---|---|
| | | |
| | | |
| | | |
| | | |
| | | |
| | | |
| | | |

Revisions

COMMONWEALTH OF VIRGINIA
DEPARTMENT OF TRANSPORTATION

STRUCTURE AND BRIDGE DIVISION

END BEARING AND WATERPROOFING DETAILS FOR CONCRETE OVERLAY

| Designed: S&B DIV | Date | Plan No. | Sheet No. |
|---|---|---|---|
| Drawn: S&B DIV | | PBT-6B | |
| Checked: S&B DIV | | | |

**PRESTRESSED CONCRETE ADJACENT MEMBER STANDARD**
**BOX BEAMS – TRANSVERSE TENDONS**
**WATERPROOFING DETAILS FOR CONCRETE OVERLAY**

**NOTES TO DESIGNER:**

Include standard PBT-1, PBT-2B, PBT-3 and PBT-4 in the plans when using this standard.

Include standard PBT-5A in the plans when using F-shape parapet.

Details are shown for 4'-0" x 27" prestressed concrete box beams. Details are similar for other widths and depths and alterations are not necessary unless indicated below. Remove scales from details and indicate sheet is Not to Scale at bottom when other widths and depths are used. Scales are shown on the standard sheet to assist Designers when detail changes are necessary.

Cells for completing the standard are located in the PSC_BB.CEL library.

**ADD THE FOLLOWING NOTES, DIMENSIONS, DETAILS, ETC. TO STANDARD:**

WATERPROOFING MEMBRANE DETAIL:

Modify abutment or bearing details as necessary.

END OF SLAB VIEW AT ABUTMENTS:

Modify details when necessary to convey waterproofing membrane limits due to abutment details.

SECTION THRU PIER JOINTS:

Do not remove detail for bridges without piers. Modify the detail when sleeves through the beam ends for anchor bolts are used at fixed bearing locations.

SECTION THRU PARAPET:

Replace with parapet or other rail as needed.

END BEARING DETAILS:

Modify details as necessary where laminated elastomeric bearings are used to account for grade, skew or longer expansion lengths. Where grades exceed 1 percent and laminated elastomeric bearings are not used, add cell for SLABS ON GRADIENT IN EXCESS OF 1% to standards PBT -3 and -4.

NOTES:

Do not alter procedure for bridges without piers.

| STATE | FEDERAL AID ROUTE | FEDERAL AID PROJECT | STATE ROUTE | STATE PROJECT | SHEET NO. |
|---|---|---|---|---|---|
| VA. | — | | | | |

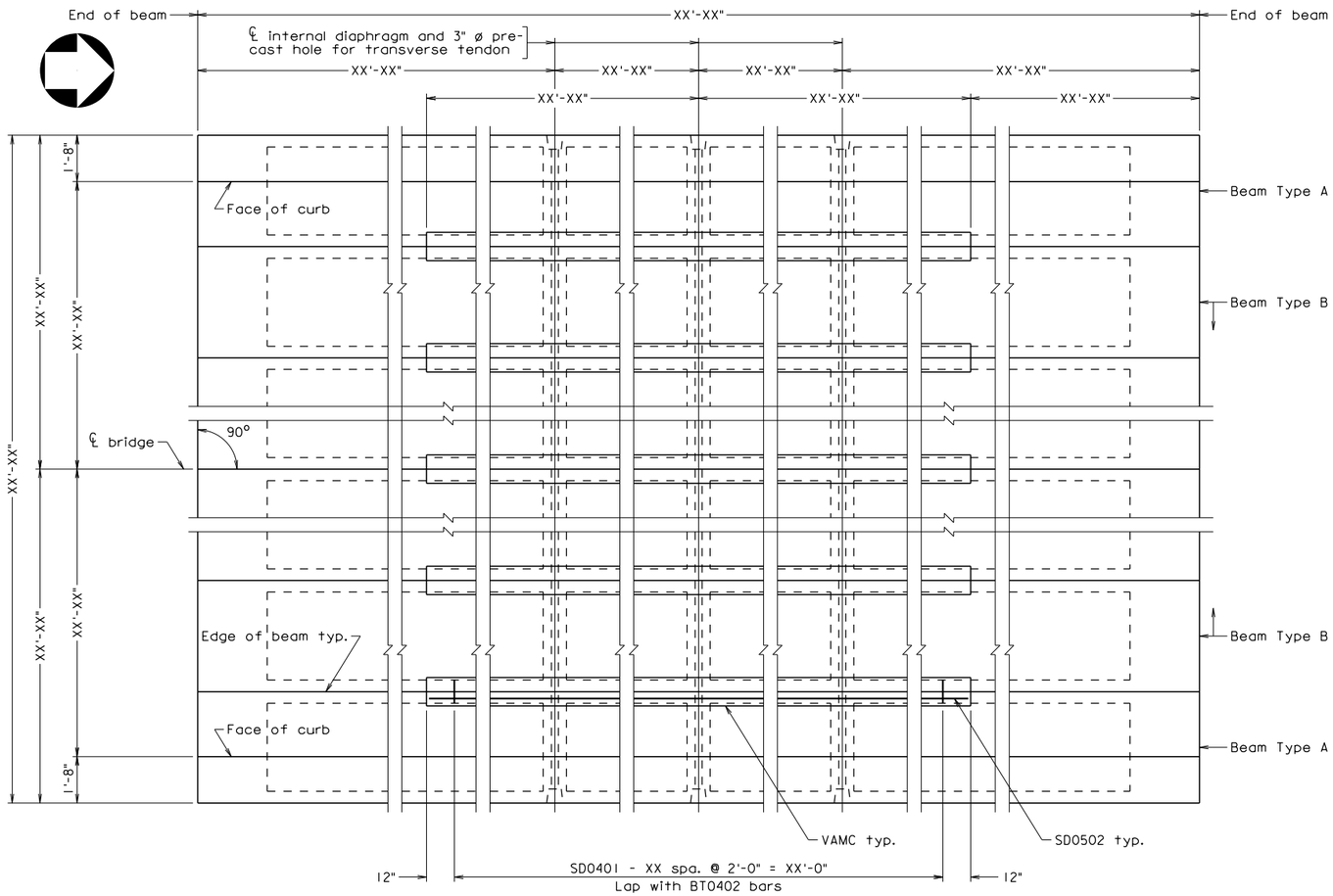


## ERECTION DIAGRAM

Shear key limits not shown for clarity

Notes:

SD0401 and SD0502 bars are included in the Reinforcing Steel Schedule for Superstructure.

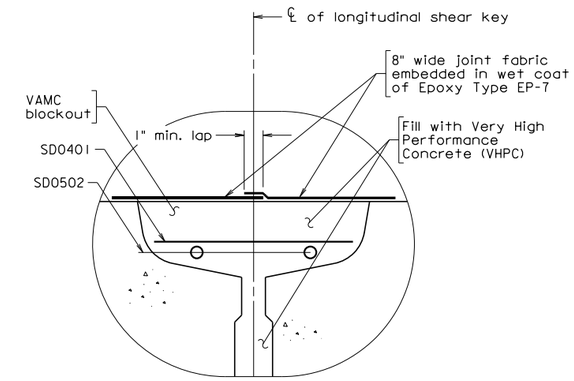


## VIRGINIA ADJACENT MEMBER CONNECTION (VAMC) DETAIL

Overlay not shown.
One strip required for shear key waterproofing beyond VAMC.
Scale: 3" = 1'-0"

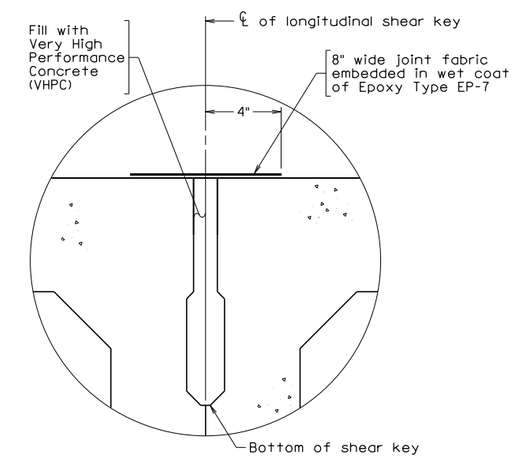


## SHEAR KEY DETAIL

Overlay not shown
Scale: 3" = 1'-0"

PBV_1.dgn

12-28-2016

PBV-1

Sealed and Signed by:
Junyi Meng
Lic. No. 033572
On the date of
December 28, 2016

A copy of the original sealed and signed standard drawing is on file in the Central Office.

VDOT S&B DIVISION
RICHMOND, VA
STRUCTURAL ENGINEER

| No. | Description | Date |
|---|---|---|
| | | |
| | | |
| | | |
| | | |
| | | |
| | | |
| | | |

Revisions

Scale: 3/8" = 1'-0" unless otherwise noted

©2016, Commonwealth of Virginia

COMMONWEALTH OF VIRGINIA
DEPARTMENT OF TRANSPORTATION

STRUCTURE AND BRIDGE DIVISION

ERECTION DIAGRAM

Designed: S&B DIV
Drawn: S&B DIV
Checked: S&B DIV

Date

Plan No. PBV-1

Sheet No.

**PRESTRESSED CONCRETE AJACENT MEMBER STANDARD**
**BOX BEAMS – VIRGINIA ADJACENT MEMBER CONNECTIONS (VAMC)**
**ERECTION DIAGRAM**

**NOTES TO DESIGNER:**

Include standard PBV-2A or -2B, PBV-3, PBV-4 and PBV-6A or -6B in the plans when using this standard. Include standard PBV-5A in the plans when using F-shape parapet.

The default ERECTION DIAGRAM cell provided is for single span 4'-0" wide box beams on 0 degree skew where an edge of beam falls on the bridge centerline for beams constrained from lateral movement by wing haunches cast tight against the beams. F-shape parapet is shown with the back of parapet aligning with the exterior edge of beam.

Cells for completing the standard are located in the PSC_BB.CEL library.

The available ERECTION DIAGRAM cells are generic and may require modification or complete replacement as indicated below.

**ADD THE FOLLOWING NOTES, DIMENSIONS, DETAILS, ETC. TO STANDARD:**

ERECTION DIAGRAM:

Replace with appropriate cell where 3'-0" box beams are used, skew is other than 0 degrees or centerline of bridge falls within beam width.

Transverse tendons are not required using VAMC details for 27" and 33" box beam depths, but solid sections (breaks in voids serving as interior diaphragms) are required at the same intervals. Transverse tendons are required in the bottom of 39" and 42" box beam depths. Cells detail solid sections/tendons at quarter points. Remove solid section/tendon at midspan for third points or both outside solid sections/tendons for half point only depending on depth. Remove solid sections by showing continuous void outlines. See Part 2, Section 12.06, of this manual for transverse tendon/interior diaphragm requirements.

Enter beam length, bridge width, distances to bridge centerline and distances to faces of curb/rail.

Where F-shape parapet is not used or the back of parapet/rail does not align with the exterior edge of beam, adjust details to show actual barrier width and position.

Enter lengths and distance from end of beam for the VAMC blockouts. The overall longitudinal VAMC blockout dimension is to extend between 0.25 and 0.75 of the span rounded up to an even 6-foot interval. This will allow the use of reusable standard forms for the blockouts with slits to accommodate the BT0401 bars.

Orient North Arrow to correct direction.

For skews greater than 10 degrees, cells are not available and the ERECTION DIAGRAM shall be developed by the Designer to the actual skew. Transverse rods will be necessary to connect two beams at a time with access pockets cast into the beams for 39" and 42" depths. See Part 2, File No. 12.06-13 for sample sheet showing example details required.

**ADD THE FOLLOWING NOTES, DIMENSIONS, DETAILS, ETC. TO STANDARD (cont'd):**

ERECTION DIAGRAM (continued):

For multiple spans, the ERECTION DIAGRAM shall be developed by the Designer to provide the necessary details for the complete structure. Where a reduced scale is necessary such that showing void outlines reduces detail clarity significantly, remove void outlines.

For stage construction, temporary barrier is typically necessary requiring an additional member type and the ERECTION DIAGRAM shall be developed by the Designer to provide the required details. See Part 2, File No. 12.06-13 for sample sheet showing example details required. An additional interior beam sheet will be necessary and can be developed by providing an additional PBV-4 standard sheet in the plan set and modifying to provide the Type C details.

NOTES:

Enter sheet numbers for references to specific details.

| STATE | FEDERAL AID ROUTE | FEDERAL AID PROJECT | STATE ROUTE | STATE PROJECT | SHEET NO. |
|---|---|---|---|---|---|
| VA. | — | | | | |

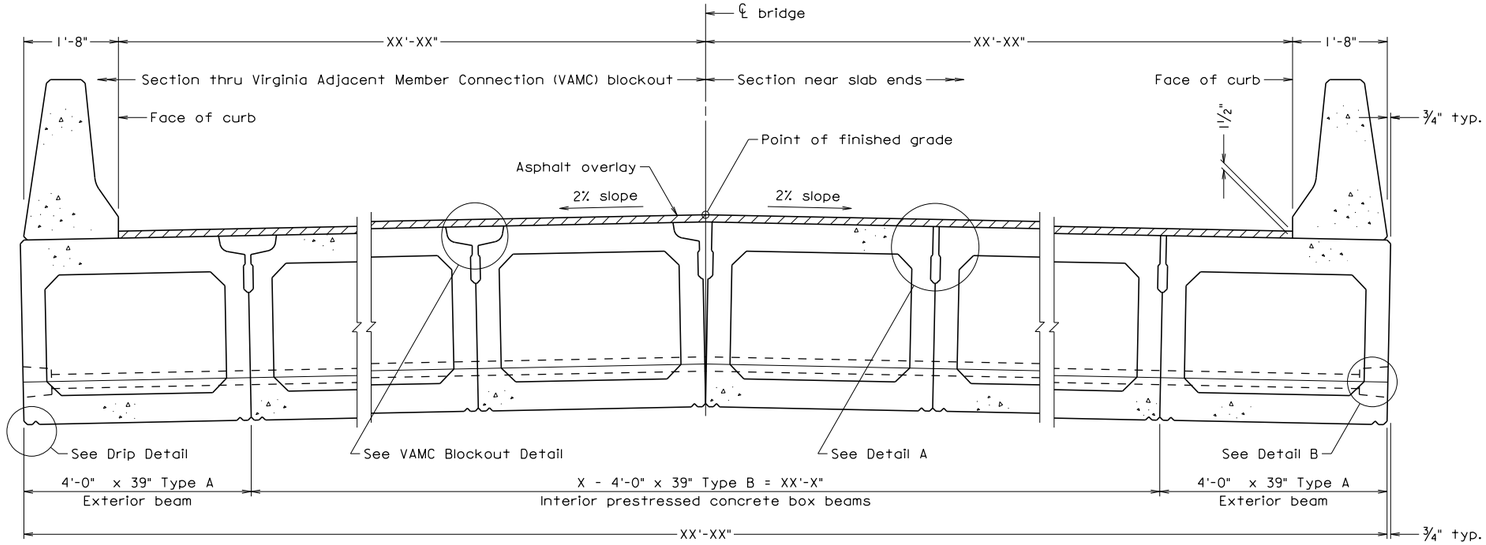


## TRANSVERSE SECTION

NOTES:

The bridge and roadway widths shown are nominal. Actual widths may vary due to fabrication and construction (gaps between boxes) tolerances.

Asphalt concrete overlay shall be Type SM-12.5D. Payment for the entire overlay shall be made at the unit price for asphalt concrete Type SM-2C.

Transverse tendons shall be ½" dia. coated, low-relaxation Grade 270 strand (Polystrand CP or equal) tensioned to 31,600 lbs. When the length of the strand used for transverse tendon is less than 20 feet, substitute a ⅞" dia. smooth rod conforming to ASTM A449 with 2½" long threaded ends tensioned to 30,000 lbs. for the ½" dia. strand. The rod shall have a washer and nut at each end. Rods, nuts, washers and 1" x 5" x 5" steel plates shall be galvanized.

Very High Performance Concrete shall be furnished and placed in accordance with the current VDOT Special Provision for Very High Performance Concrete (VHPC). The cost of the VHPC shall be included in the cost of the prestressed concrete members.

All keyway surfaces shall be cleaned of all dirt, laitance and loose aggregate by means of sandblasting and pre-wetted prior to the grouting of shear keys.

All grouting of shear keys and VAMC blockouts with VHPC shall be done in one continuous operation without interruption for each span. Care shall be taken to prevent leakage of VHPC into precast holes for transverse tendons or from bottoms of shear keys.

Post-tensioning of transverse tendons and the casting of parapets shall not be done until all grouting of keys are completed and the VHPC has reached a minimum strength of 4000 psi.

Entire deck shall be waterproofed in accordance with the requirements of Section 405 and Section 416 of the Specifications. For waterproofing details, see sheet ___.

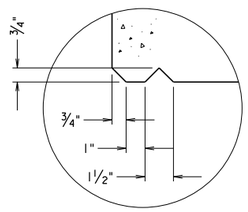


## DRIP DETAIL

Typ. each side of each member
Scale: 3" = 1'-0"

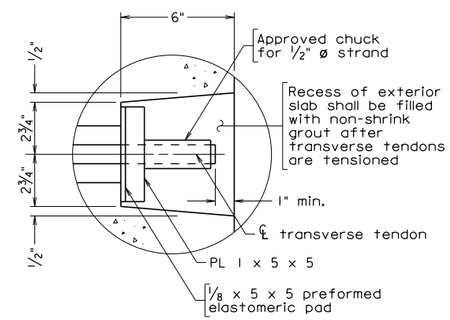


## DETAIL B

Scale: 3" = 1'-0"

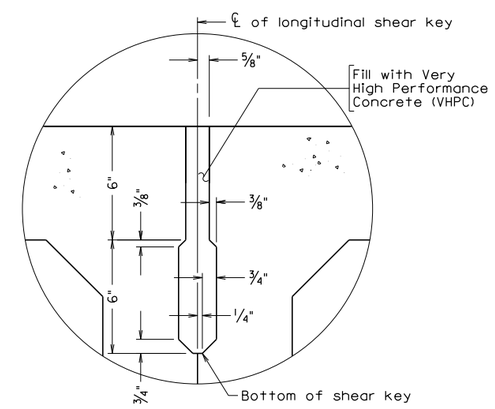


## DETAIL A

Overlay not shown
All shear key dimensions typ. each side
Scale: 3" = 1'-0"

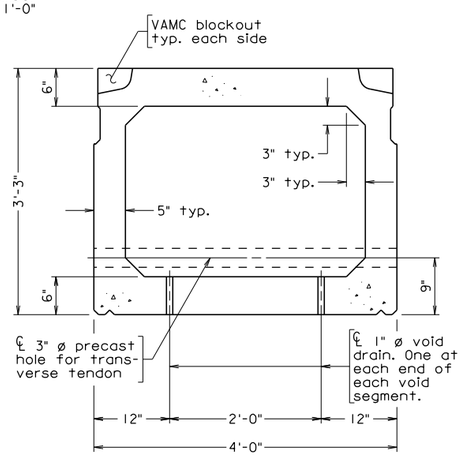


## TYPICAL INTERIOR SECTION TYPE B

Scale: 1" = 1'-0"

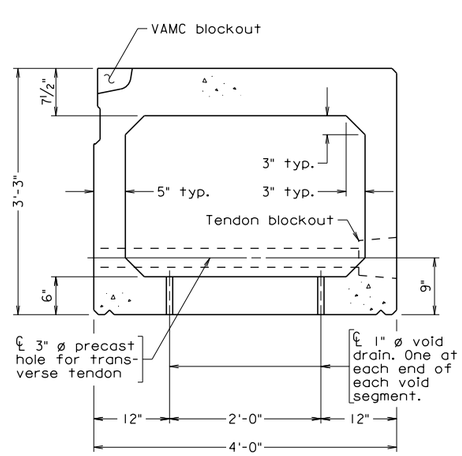


## TYPICAL EXTERIOR SECTION TYPE A

Scale: 1" = 1'-0"

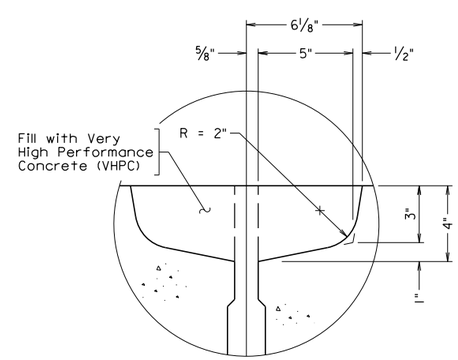


## VAMC BLOCKOUT DETAIL

Overlay not shown
All blockout dimensions typ. each side
Scale: 3" = 1'-0"

Scale: ¾" = 1'-0" unless otherwise noted

©2016, Commonwealth of Virginia

PBV_2A.dgn

12-28-2016

Sealed and Signed by:
Junyi Meng
Lic. No. 033572
On the date of December 28, 2016

A copy of the original sealed and signed standard drawing is on file in the Central Office.

VDOT S&B DIVISION
RICHMOND, VA
STRUCTURAL ENGINEER

PBV-2A

| No. | Description | Date |
|---|---|---|
| | | |
| | | |
| | | |
| | | |
| | | |
| | | |
| | | |

Revisions

COMMONWEALTH OF VIRGINIA
DEPARTMENT OF TRANSPORTATION

STRUCTURE AND BRIDGE DIVISION

# TRANSVERSE AND TYPICAL SECTIONS; ASPHALT OVERLAY

Designed: S&B DIV
Drawn: S&B DIV
Checked: S&B DIV

Date

Plan No. PBV-2A

Sheet No.

**PRESTRESSED CONCRETE ADJACENT MEMBER STANDARD**
**BOX BEAMS – VIRGINIA ADJACENT MEMBER CONNECTIONS (VAMC)**
**TRANSVERSE AND TYPICAL SECTIONS – ASPHALT OVERLAY**

**NOTES TO DESIGNER:**

Include standard PBV-1, PBV-3, PBV-4 and PBV-6A in the plans when using this standard. Include standard PBV-5A in the plans when using F-shape parapet.

The designer shall ensure that the width of the pier cap or the seat of the abutment is sufficient for locating the anchor bolts.

The designer should avoid whenever possible the mixing of 3'-0" and 4'-0" wide beam sections.

For exterior beams, use thicker top flange to avoid conflicts and problems with reinforcing steel for some parapets/railings (e.g., F-shape).

The default cells provided on the sheet are for 4'-0" x 39" box beams. Transverse Section is shown for beams sloped to bridge crown, edge of beam falls on the bridge centerline and back of F-shape parapet aligned with the exterior edge of beam.

Cells for completing the standard are located in the PSC_BB.CEL library.

**ADD THE FOLLOWING NOTES, DIMENSIONS, DETAILS, ETC. TO STANDARD:**

TRANSVERSE SECTION:

Enter dimensions from face of curb/rail to bridge centerline. Enter number of interior sections and total length of interior sections. Enter total width.

Modify F-shaped parapet position when not aligned with the edge of the exterior beam. Replace with sidewalk, rail, etc. as needed.

Replace with appropriate cell for other depths/widths and where beams are level.

For stage construction, the Transverse Section shall be developed by the Designer. The Transverse Section may need to be drawn full width to properly show and dimension the location of the temporary barrier and a reduced scale may be necessary. An additional interior beam sheet is required and can be developed by providing an additional PBV-4 standard sheet in the plan set and modifying to provide the Type C details.

TYPICAL INTERIOR SECTION and TYPICAL EXTERIOR SECTION:

Where 4'-0" x 39" sections are not used, replace with appropriate sections from cell library. For stage construction, add Type C Section.

| STATE | FEDERAL AID ROUTE | FEDERAL AID PROJECT | STATE ROUTE | STATE PROJECT | SHEET NO. |
|---|---|---|---|---|---|
| VA. | — | | | | |

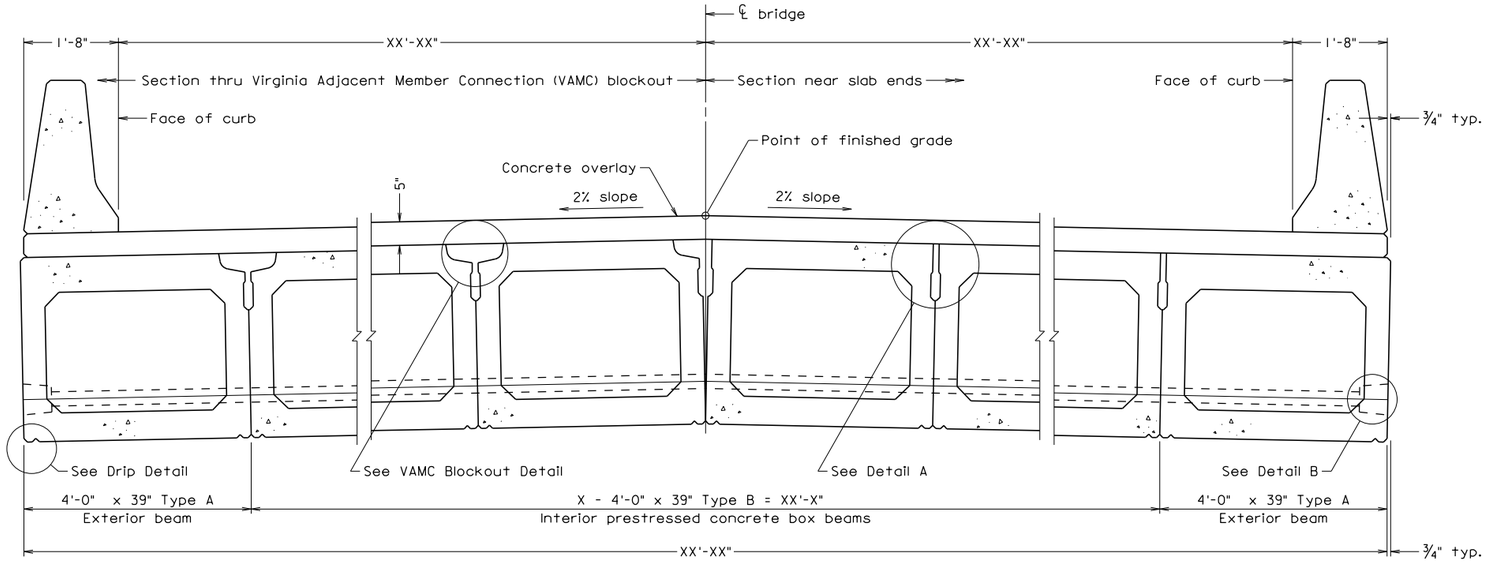


## TRANSVERSE SECTION

NOTES:

The bridge and roadway widths shown are nominal. Actual widths may vary due to fabrication and construction (gaps between boxes) tolerances.

Concrete for the overlay shall be Low Shrinkage Class A4 Modified having a minimum 28 day compressive strength of 4000 psi. Payment for the concrete overlay shall be made at the unit price for Concrete Class A4.

All reinforcing bars shall be Corrosion Resistant Reinforcing steel, Class __.

Top surfaces of all boxes shall be a clean concrete surface, free of laitance, with surface intentionally roughened to an amplitude of ¼".

Transverse tendons shall be ½" dia. coated, low-relaxation Grade 270 strand (Polystrand CP or equal) tensioned to 31,600 lbs. When the length of the strand used for transverse tendon is less than 20 feet, substitute a ⅞" dia. smooth rod conforming to ASTM A449 with 2½" long threaded ends tensioned to 30,000 lbs. for the ½" dia. strand. The rod shall have a washer and nut at each end. Rods, nuts, washers and 1" x 5" x 5" steel plates shall be galvanized.

Very High Performance Concrete shall be furnished and placed in accordance with the current VDOT Special Provision for Very High Performance Concrete (VHPC). The cost of the VHPC shall be included in the cost of the prestressed concrete members.

All keyway surfaces shall be cleaned of all dirt, laitance and loose aggregate by means of sandblasting and pre-wetted prior to the grouting of shear keys.

All grouting of shear keys and VAMC blockouts with VHPC shall be done in one continuous operation without interruption for each span. Care shall be taken to prevent leakage of VHPC into precast holes for transverse tendons or from bottoms of shear keys.

Post-tensioning of transverse tendons and the casting of parapets shall not be done until all grouting of keys are completed and the VHPC has reached a minimum strength of 4000 psi.

For waterproofing details, see sheet __.

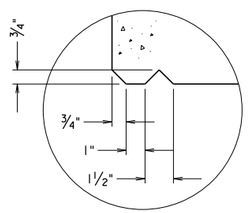


## DRIP DETAIL

Typ. each side of each member
Scale: 3" = 1'-0"

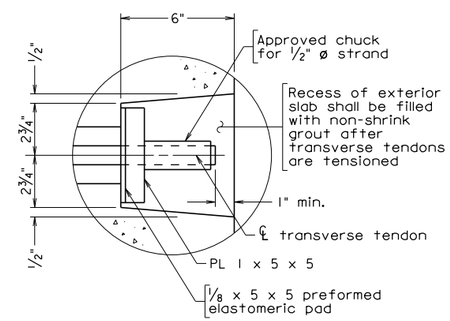


## DETAIL B

Scale: 3" = 1'-0"

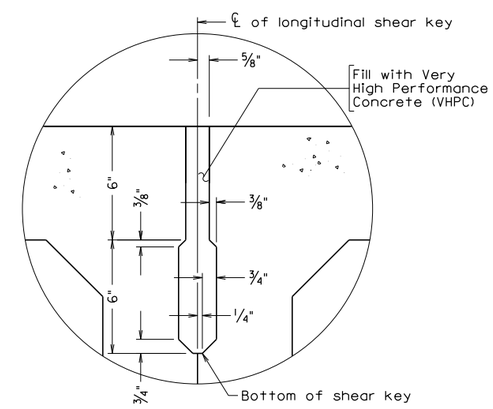


## DETAIL A

Overlay not shown
All shear key dimensions typ. each side
Scale: 3" = 1'-0"

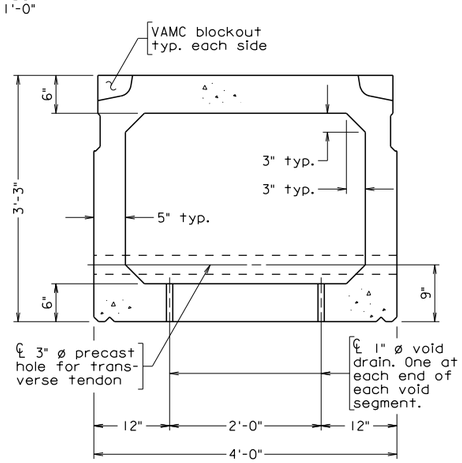


## TYPICAL INTERIOR SECTION TYPE B

Scale: 1" = 1'-0"

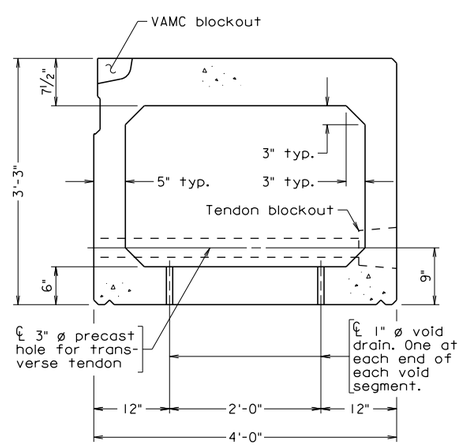


## TYPICAL EXTERIOR SECTION TYPE A

Scale: 1" = 1'-0"

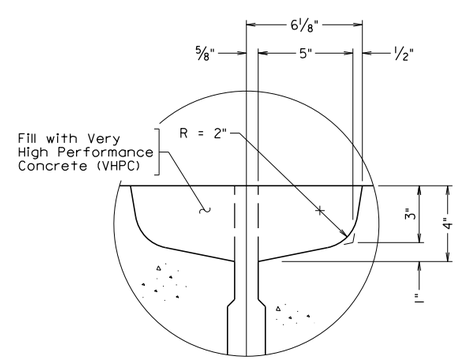


## VAMC BLOCKOUT DETAIL

Overlay not shown
All blockout dimensions typ. each side
Scale: 3" = 1'-0"

Scale: ¾" = 1'-0" unless otherwise noted

©2016, Commonwealth of Virginia

PBV_2B.dgn

12-28-2016

Sealed and Signed by:
Junyi Meng
Lic. No. 033572
On the date of December 28, 2016

A copy of the original sealed and signed standard drawing is on file in the Central Office.

VDOT S&B DIVISION
RICHMOND, VA
STRUCTURAL ENGINEER

PBV-2B

| No. | Description | Date |
|---|---|---|
| | Revisions | |

COMMONWEALTH OF VIRGINIA
DEPARTMENT OF TRANSPORTATION

STRUCTURE AND BRIDGE DIVISION

# TRANSVERSE AND TYPICAL SECTIONS; CONCRETE OVERLAY

Designed: S&B DIV
Drawn: S&B DIV
Checked: S&B DIV

Date

Plan No. PBV-2B

Sheet No.

**NOTES TO DESIGNER:**

Include standard PBV-1, PBV-3, PBV-4 and PBV-6B in the plans when using this standard. Include standard PBV-5A in the plans when using F-shape parapet.

The designer shall ensure that the width of the pier cap or the seat of the abutment is sufficient for locating the anchor bolts.

The designer should avoid whenever possible the mixing of 3'-0" and 4'-0" wide beam sections.

For exterior beams, use thicker top flange to avoid conflicts and problems with reinforcing steel for some parapets/railings (e.g., F-shape).

The default cells provided on the sheet are for 4'-0" x 39" box beams. Transverse Section is shown for beams sloped to bridge crown, edge of beam falls on the bridge centerline and back of F-shape parapet aligned with the exterior edge of beam.

Cells for completing the standard are located in the PSC_BB.CEL library.

**ADD THE FOLLOWING NOTES, DIMENSIONS, DETAILS, ETC. TO STANDARD:**

TRANSVERSE SECTION:

Enter dimensions from face of curb/rail to bridge centerline. Enter number of interior sections and total length of interior sections. Enter total width. Modify concrete overlay thickness where 7 ½" is used.

Modify F-shaped parapet position when not aligned with the edge of the exterior beam. Replace with sidewalk, rail, etc. as needed.

Where scale allows, detail the reinforcing steel bars in the concrete overlay. Where scale is not sufficient, add Part Detail on this sheet or provide on separate sheet with Deck Plan. See Part 2, File No. 12.06-3 for minimum reinforcement requirements.

Replace with appropriate cell for other depths/widths and where beams are level.

For stage construction, the Transverse Section shall be developed by the Designer. The Transverse Section may need to be drawn full width to properly show and dimension the location of the temporary barrier and a reduced scale may be necessary. An additional interior beam sheet is required and can be developed by providing an additional PBV-4 standard sheet in the plan set and modifying to provide the Type C details.

TYPICAL INTERIOR SECTION and TYPICAL EXTERIOR SECTION:

Where 4'-0" x 39" sections are not used, replace with appropriate sections from cell library. For stage construction, add Type C Section.

**ADD THE FOLLOWING NOTES, DIMENSIONS, DETAILS, ETC. TO STANDARD (cont'd):**

NOTES:

Complete second note by adding the Class I, II or III of corrosion resistant reinforcing steel required. For additional information on corrosion resistant reinforcing steel (CRR), see Structure and Bridge Division Instructional and Informational Memorandum (current IIM-S&B-81).

| STATE | FEDERAL AID ROUTE | FEDERAL AID PROJECT | STATE ROUTE | STATE PROJECT | SHEET NO. |
|---|---|---|---|---|---|
| VA. | — | | | | |

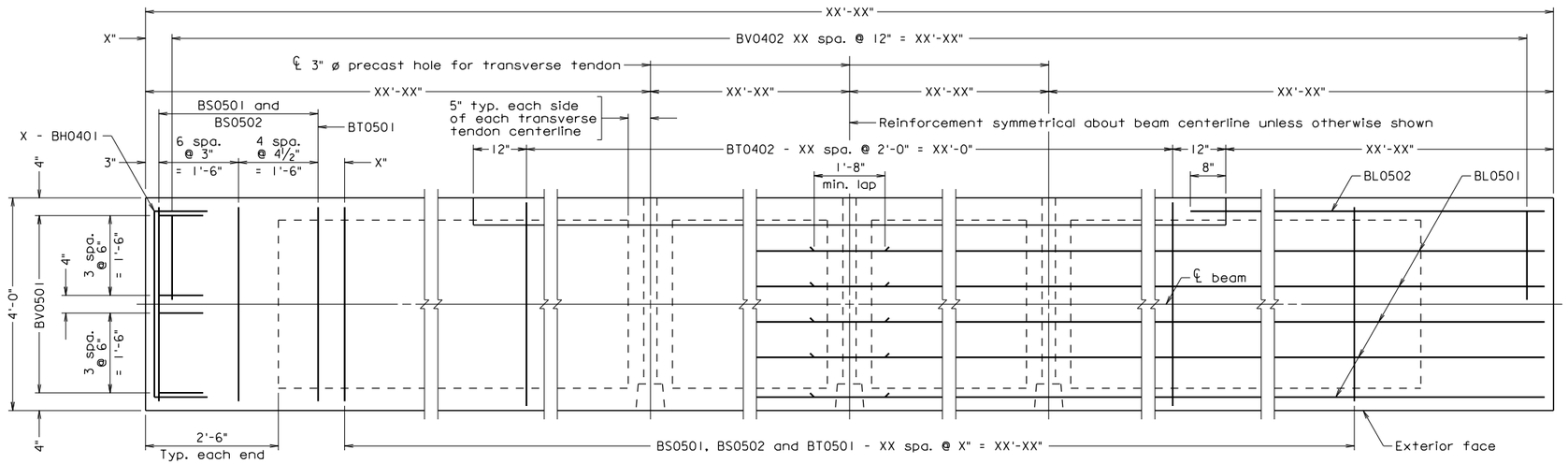


## PLAN

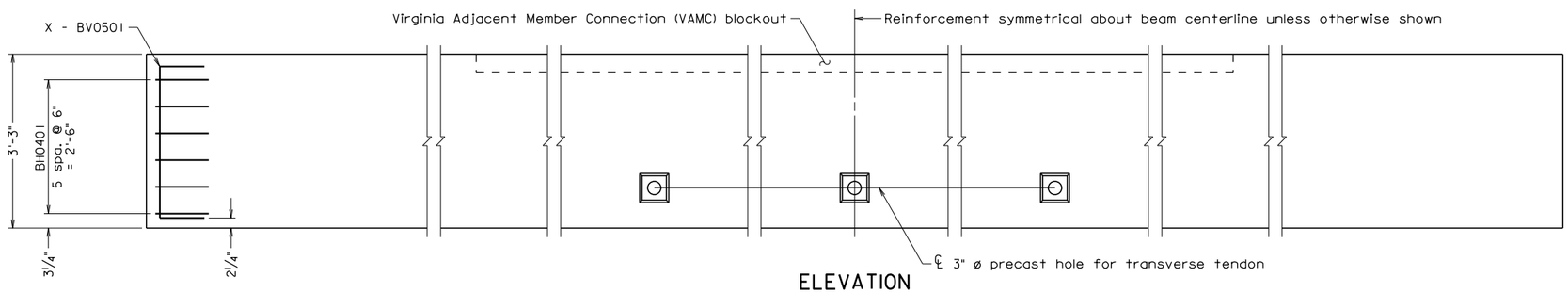


## ELEVATION

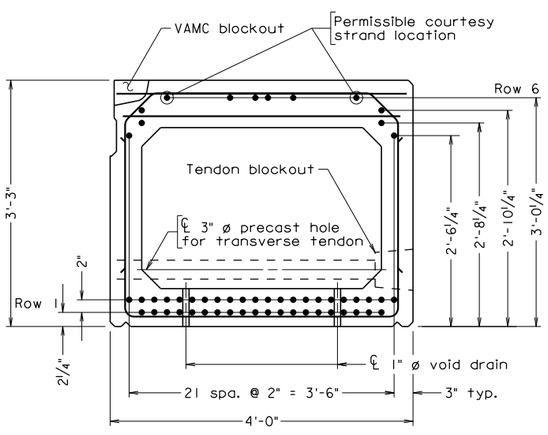


## STRAND PATTERN

Scale: 1" = 1'-0"

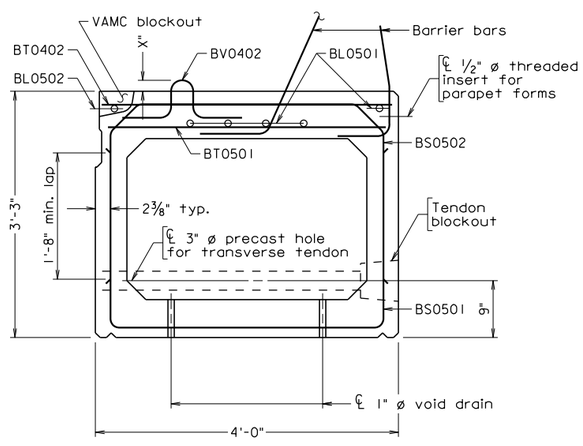


## REINFORCING DETAILS

Scale: 1" = 1'-0"

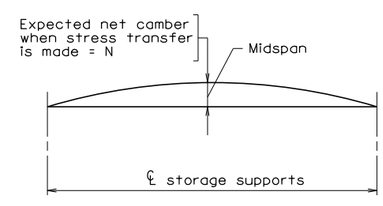


## CAMBER DIAGRAM

Scale: ¾" = 1'-0" unless otherwise noted

Notes:

All reinforcing bars shall be Corrosion Resistant Reinforcing Steel, Class __.

BS series may be slighty shifted as directed by the Engineer to clear 3" ø hole for transverse tendon.

In lieu of splicing two reinforcing bars to form each stirrup, the stirrup may be made from one single bar.

The Contractor may submit an alternate prestressing strand pattern to the Engineer for approval.

The Contractor has the option of stressing two courtesy strands each to 8,000 lbs at the locations indicated.

Box corners damaged during construction shall be restored to their shape as shown on the plans by an approved epoxy mortar.

Contractor shall determine location and spacing of ½" ø threaded inserts for parapet forms.

Due to construction tolerances, adjustment to the bridge seat elevations may be needed. It is the Contractor's responsibility to make such adjustment as directed by the Engineer to insure the full bearing of the box on all the pads.

## REINFORCING STEEL SCHEDULE

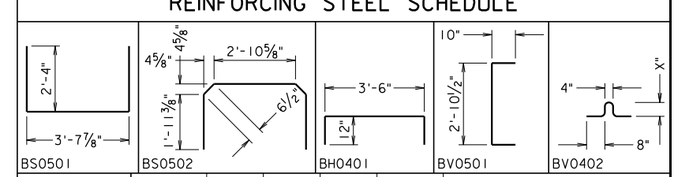


| Slab Size | Mark | No. | Size | Pin ø | Length | Location |
|---|---|---|---|---|---|---|
| 4'-0" x 39" Exterior beam Type A | BH0401 | | #4 | 2" | | End horizontal |
| | BL0501 | | #5 | — | | Top longitudinal |
| | BL0502 | | #5 | — | | Top longitudinal |
| | BS0501 | | #5 | 2½" | | Stirrup |
| | BS0502 | | #5 | 2½" | | Stirrup |
| | BT0501 | | #5 | — | 3'-8" | Top transverse |
| | BT0402 | | #4 | — | 3'-10" | Top transverse |
| | BV0501 | | #5 | 2½" | | End vertical |
| | BV0402 | | #4 | 3" | | Composite vertical |

Dimensions in bending diagram are out-to-out of bars.

Number of bars shown in table are per beam per beam type.

## PRESTRESSING STEEL DATA TABLE

| Strand Type | Slab Size | No. of strands per row: Row 1 | Row 2 | Row 3 | Row 4 | Row 5 | Row 6 | Distance from bottom of slab: Row 1 in. | Row 2 in. | Row 3 in. | Row 4 in. | Row 5 in. | Row 6 in. | Total number of strands per slab | Prestressing force per strand lbs. | Net camber N in. |
|---|---|---|---|---|---|---|---|---|---|---|---|---|---|---|---|---|
| 0.6" ø Low Relaxation Strands | 4'-0" x 39" Type A | | | | | | | | | | | | | | | |

| No. | Description | Date |
|---|---|---|
| | | |

Revisions

COMMONWEALTH OF VIRGINIA
DEPARTMENT OF TRANSPORTATION

STRUCTURE AND BRIDGE DIVISION

# EXTERIOR BEAM TYPE A VAMC BLOCKOUTS

Designed: S&B DIV
Drawn: S&B DIV
Checked: S&B DIV

Date

Plan No. PBV-3

Sheet No.

©2016, Commonwealth of Virginia

PBV_3.dgn

12-28-2016

Sealed and Signed by:
Junyi Meng
Lic. No. 033572
On the date of
December 28, 2016

A copy of the original sealed and signed standard drawing is on file in the Central Office.

VDOT S&B DIVISION
RICHMOND, VA
STRUCTURAL ENGINEER

PBV-3

**PRESTRESSED CONCRETE AJACENT MEMBER STANDARD**
**BOX BEAMS – VIRGINIA ADJACENT MEMBER CONNECTIONS (VAMC)**
**EXTERIOR BEAM – TYPE A**

**NOTES TO DESIGNER:**

Include standard PBV-1, PBV-2A or -2B, PBV-4 and PBV-6A or -6B in the plans when using this standard. Include standard PBV-5A in the plans when using F-shape parapet.

Cells for PLAN, ELEVATION, STRAND PATTERN AND REINFORCING DETAILS are provided for an exterior 4'-0" x 39" box beam. Replace with appropriate cells where other width or depth is used. Cells for completing the standard are located in the PSC_BB.CEL library.

All bar sizes, reinforcement spacing and strand positions provided in cells are input field holders and are to be adjusted as per design.

**ADD THE FOLLOWING NOTES, DIMENSIONS, DETAILS, ETC. TO STANDARD:**

PLAN:

Place appropriate PLAN from cell library. Adjust bar sizes and spacing per design.

Transverse tendons are not required using VAMC details for 27" and 33" box beam depths, but solid sections (breaks in voids serving as interior diaphragms) are required at the same intervals. Transverse tendons are required in the bottom for 39" and 42" box beam depths. Cells detail solid sections/tendons at quarter points. Remove solid section/tendon at midspan for third points or both outside solid sections/tendons for half point only depending on depth. Remove solid sections by showing continuous void outlines. See Part 2, Section 12.06, of this manual for transverse tendon/interior diaphragm requirements.

Enter the number and total length of spaces for BT0402 bars. The overall longitudinal VAMC blockout dimension is to extend between 0.25 and 0.75 of the span rounded up to an even 6-foot interval. This will allow the use of reusable standard forms for the blockouts with slits to accommodate the BT0402 bars.

Adjust end stirrup size/spacing as necessary and enter stirrup spacing throughout span.

Enter composite bar spacing or remove bars/dimensioning where composite bars are not used.

For skews greater than 0 degrees, cells are not available and the PLAN shall be developed by the Designer to the actual skew.

ELEVATION:

Place appropriate ELEVATION from cell library. Adjust bar sizes and spacing per design. Adjust interior diaphragm/tendon positions to match PLAN view.

STRAND PATTERN:

Remove strands from positions not used per design. Adjust or add strand spacing dimensioning as needed per design. Courtesy strand positions must be on 2" x 2" grid established by position of bottom strands.

**ADD THE FOLLOWING NOTES, DIMENSIONS, DETAILS, ETC. TO STANDARD (cont'd):**

REINFORCING DETAILS:

Adjust bar sizes per design. Remove composite bars where not used. Coordinate longitudinal bars with strand positions shown in STRAND PATTERN to ensure conflicts do not occur.

REINFORCING STEEL SCHEDULE:

Update schedule for specific section and skew. Verify all dimensions per design requirements and adjust where necessary. Where smaller size bar is adequate per design, adjust size and dimensions accordingly.

## REINFORCING STEEL SCHEDULE

| Slab size | Mark | Size | Dimension A | | | | Dimension B |
|---|---|---|---|---|---|---|---|
| | | | Skew angle | | | | |
| | | | 0° | over 0° to 15° | over 15° to 30° | over 30° to 45° | |
| 3'-0" x all depths | BH0401 | #4 | | | | | |
| 4'-0" x all depths | BH0401 | #4 | | | | | |
| All slab sizes | BL0501 | #5 | Depends on beam length / whether splice req.'d | | | | ------ |
| All slab sizes | BL0502 | #5 | Depends on drop-in bar blockout length | | | | ------ |
| 3'-0" x 27" | BS0501 | #5 | | | | | |
| 3'-0" x 33" | BS0501 | #5 | | | | | |
| 3'-0" x 39" | BS0501 | #5 | | | | | |
| 3'-0" x 42" | BS0501 | #5 | | | | | |
| 4'-0" x 27" | BS0501 | #5 | | | | | |
| 4'-0" x 33" | BS0501 | #5 | | | | | |
| 4'-0" x 39" | BS0501 | #5 | | | | | |
| 4'-0" x 42" | BS0501 | #5 | | | | | |
| 3'-0" x all depths | BT0501 | #5 | | | | | |
| 4'-0" x all depths | BT0501 | #5 | | | | | |
| 3'-0" x all depths | BT0401 | #4 | | | | | |
| 4'-0" x all depths | BT0401 | #4 | | | | | |
| 3'-0" / 4'-0" x 27"" | BV0501 | #5 | | | | | |
| 3'-0" / 4'-0" x 33" | BV0501 | #5 | | | | | |
| 3'-0" / 4'-0" x 39" | BV0501 | #5 | | | | | |
| 3'-0" / 4'-0" x 42" | BV0501 | #5 | | | | | |
| All slab sizes | BV0402 | #4 | | | | | |

**ADD THE FOLLOWING NOTES, DIMENSIONS, DETAILS, ETC. TO STANDARD (cont'd):**

PRESTRESSING STEEL DATA TABLE:

Complete table. Ensure table content matches number and position of strands shown in STRAND PATTERN.

NOTES:

Complete corrosion resistant reinforcing steel note by adding the required Class. See Structure and Bridge Division Instructional and Informational Memorandum (current IIM-S&B-81).

ANCHOR DETAIL and ALTERNATE ANCHOR DETAIL:

Where the ends of prestessed concrete box beams are not constrained or buoyancy will cause uplift of the superstructure, add the details and notes from the cell library to this sheet. If insufficient room, move them to another sheet.

| STATE | FEDERAL AID ROUTE | FEDERAL AID PROJECT | STATE ROUTE | STATE PROJECT | SHEET NO. |
|---|---|---|---|---|---|
| VA. | — | | | | |

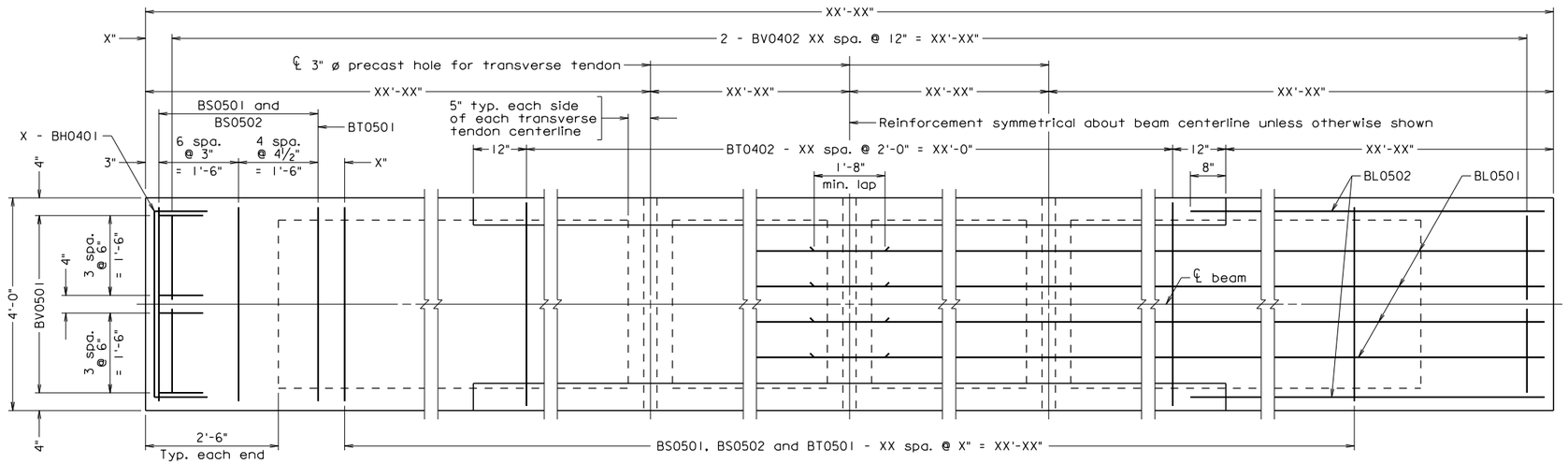


## PLAN

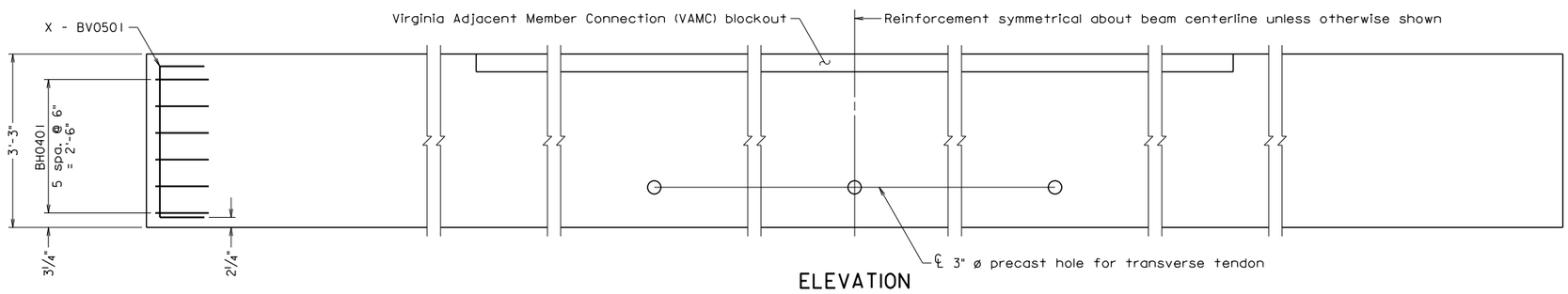


## ELEVATION

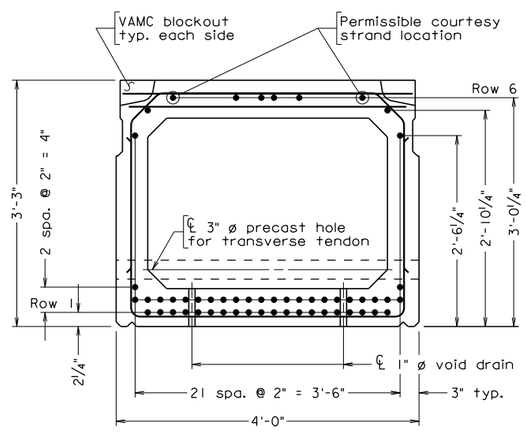


## STRAND PATTERN

Scale: 1" = 1'-0"

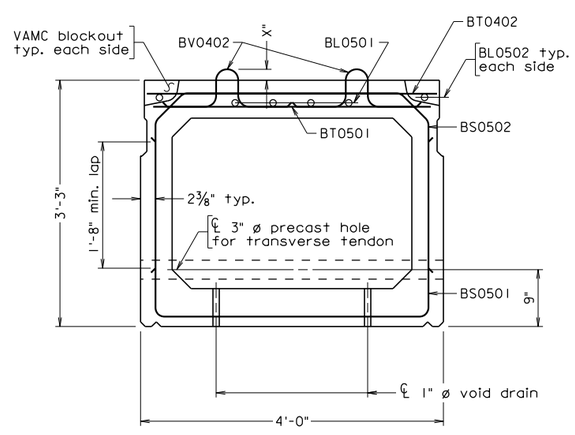


## REINFORCING DETAILS

Scale: 1" = 1'-0"

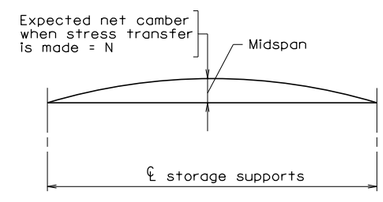


## CAMBER DIAGRAM

Scale: ¾" = 1'-0" unless otherwise noted

## PRESTRESSING STEEL DATA TABLE

| Strand Type | Slab Size | No. of strands per row: Row 1 | Row 2 | Row 3 | Row 4 | Row 5 | Row 6 | Distance from bottom of slab: Row 1 in. | Row 2 in. | Row 3 in. | Row 4 in. | Row 5 in. | Row 6 in. | Total number of strands per slab | Prestressing force per strand lbs. | Net camber N in. |
|---|---|---|---|---|---|---|---|---|---|---|---|---|---|---|---|---|
| 0.6" ø Low Relaxation Strands | 4'-0" x 39" Type B | | | | | | | | | | | | | | | |

Notes:

All reinforcing bars shall be Corrosion Resistant Reinforcing Steel, Class __.

BS series may be slighty shifted as directed by the Engineer to clear 3" ø hole for transverse tendon.

In lieu of splicing two reinforcing bars to form each stirrup, the stirrup may be made from one single bar.

The Contractor may submit an alternate prestressing strand pattern to the Engineer for approval.

The Contractor has the option of stressing two courtesy strands each to 8,000 lbs at the locations indicated.

Box corners damaged during construction shall be restored to their shape as shown on the plans by an approved epoxy mortar.

Due to construction tolerances, adjustment to the bridge seat elevations may be needed. It is the Contractor's responsibility to make such adjustment as directed by the Engineer to insure the full bearing of the box on all the pads.

## REINFORCING STEEL SCHEDULE

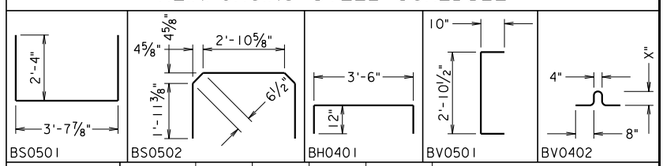


| Slab Size | Mark | No. | Size | Pin ø | Length | Location |
|---|---|---|---|---|---|---|
| 4'-0" x 39" Interior beam Type B | BH0401 | | #4 | 2" | | End horizontal |
| | BL0501 | | #5 | — | | Top longitudinal |
| | BL0502 | | #5 | — | | Top longitudinal |
| | BS0501 | | #5 | 2½" | | Stirrup |
| | BS0502 | | #5 | 2½" | | Stirrup |
| | BT0501 | | #5 | — | 3'-8" | Top transverse |
| | BT0402 | | #4 | — | 3'-10" | Top transverse |
| | BV0501 | | #5 | 2½" | | End vertical |
| | BV0402 | | #4 | 3" | | Composite vertical |

Dimensions in bending diagram are out-to-out of bars.

Number of bars shown in table are per beam per beam type.

| No. | Description | Date |
|---|---|---|
| | | |

Revisions

COMMONWEALTH OF VIRGINIA
DEPARTMENT OF TRANSPORTATION

STRUCTURE AND BRIDGE DIVISION

# INTERIOR BEAM TYPE B VAMC BLOCKOUTS

Designed: S&B DIV
Drawn: S&B DIV
Checked: S&B DIV

Date

Plan No. PBV-4

Sheet No.

©2016, Commonwealth of Virginia

PBV_4.dgn

12-28-2016

Sealed and Signed by:
Junyi Meng
Lic. No. 033572
On the date of
December 28, 2016

A copy of the original sealed and signed standard drawing is on file in the Central Office.

VDOT S&B DIVISION
RICHMOND, VA
STRUCTURAL ENGINEER

PBV-4

**PRESTRESSED CONCRETE AJACENT MEMBER STANDARD**
**BOX BEAMS – VIRGINIA ADJACENT MEMBER CONNECTIONS (VAMC)**
**INTERIOR BEAM – TYPE B**

**NOTES TO DESIGNER:**

Include standard PBV-1, PBV-2A or -2B, PBV-3 and PBV-6A or -6B in the plans when using this standard. Include standard PBV-5A in the plans when using F-shape parapet.

Cells for PLAN, ELEVATION, STRAND PATTERN AND REINFORCING DETAILS are provided for an interior 4'-0" x 39" BOX BEAM. Replace with appropriate cells where other width or depth is used. Cells for completing the standard are located in the PSC_BB.CEL library.

All bar sizes, reinforcement spacing and strand positions provided in cells are input field holders and are to be adjusted as per design.

**ADD THE FOLLOWING NOTES, DIMENSIONS, DETAILS, ETC. TO STANDARD:**

PLAN:

Place appropriate PLAN from cell library. Adjust bar sizes and spacing per design.

Transverse tendons are not required using VAMC details for 27" and 33" box beam depths, but solid sections (breaks in voids serving as interior diaphragms) are required at the same intervals. Transverse tendons are required in the bottom of 39" and 42" box beam depths. Cells detail solid sections/tendons at quarter points. Remove solid section/tendon at midspan for third points or both outside solid sections/tendons for half point only depending on depth. Remove solid sections by showing continuous void outlines. See Part 2, Section 12.06, of this manual for transverse tendon/interior diaphragm requirements.

Enter the number and total length of spaces for BT0402 bars. The overall longitudinal VAMC blockout dimension is to extend between 0.25 and 0.75 of the span rounded up to an even 6-foot interval. This will allow the use of reusable standard forms for the blockouts with slits to accommodate the BT0402 bars.

Adjust end stirrup spacing as necessary and enter stirrup spacing throughout span.

Enter composite bar spacing or remove bars/dimensioning where composite bars are not used.

For skews greater than 0 degrees, cells are not available and the PLAN shall be developed by the Designer to the actual skew.

ELEVATION:

Place appropriate ELEVATION from cell library. Adjust bar sizes and spacing per design. Adjust tendon positions to match PLAN view.

STRAND PATTERN:

Remove strands from positions not used per design. Adjust or add strand spacing dimensioning as needed per design. Courtesy strand positions must be on 2" x 2" grid established by position of bottom strands.

**ADD THE FOLLOWING NOTES, DIMENSIONS, DETAILS, ETC. TO STANDARD (cont'd):**

REINFORCING DETAILS:

Adjust bar sizes per design. Remove composite bars where not used. Coordinate longitudinal bars with strand positions shown in STRAND PATTERN to ensure conflicts do not occur.

REINFORCING STEEL SCHEDULE:

Update schedule for specific section and skew. Verify all dimensions per design requirements and adjust where necessary. Where smaller size bar is adequate per design, adjust size and dimensions accordingly.

## REINFORCING STEEL SCHEDULE

| Slab size | Mark | Size | Dimension A – Skew angle: 0° | over 0° to 15° | over 15° to 30° | over 30° to 45° | Dimension B |
|---|---|---|---|---|---|---|---|
| 3'-0" x all depths | BH0401 | #4 | | | | | |
| 4'-0" x all depths | BH0401 | #4 | | | | | |
| All slab sizes | BL0501 | #5 | Depends on beam length / whether splice req.'d | | | | ------ |
| All slab sizes | BL0502 | #5 | Depends on drop-in bar blockout length | | | | ------ |
| 3'-0" x 27" | BS0501 | #5 | | | | | |
| 3'-0" x 33" | BS0501 | #5 | | | | | |
| 3'-0" x 39" | BS0501 | #5 | | | | | |
| 3'-0" x 42" | BS0501 | #5 | | | | | |
| 4'-0" x 27" | BS0501 | #5 | | | | | |
| 4'-0" x 33" | BS0501 | #5 | | | | | |
| 4'-0" x 39" | BS0501 | #5 | | | | | |
| 4'-0" x 42" | BS0501 | #5 | | | | | |
| 3'-0" x all depths | BT0501 | #5 | | | | | |
| 4'-0" x all depths | BT0501 | #5 | | | | | |
| 3'-0" x all depths | BT0401 | #4 | | | | | |
| 4'-0" x all depths | BT0401 | #4 | | | | | |
| 3'-0" / 4'-0" x 27"" | BV0501 | #5 | | | | | |
| 3'-0" / 4'-0" x 33" | BV0501 | #5 | | | | | |
| 3'-0" / 4'-0" x 39" | BV0501 | #5 | | | | | |
| 3'-0" / 4'-0" x 42" | BV0501 | #5 | | | | | |
| All slab sizes | BV0402 | #4 | | | | | |

**ADD THE FOLLOWING NOTES, DIMENSIONS, DETAILS, ETC. TO STANDARD (cont'd):**

PRESTRESSING STEEL DATA TABLE:

Complete table. Ensure table content matches number and position of strands shown in STRAND PATTERN.

NOTES:

Complete corrosion resistant reinforcing steel note by adding the required Class. See Structure and Bridge Division Instructional and Informational Memorandum (current IIM-S&B-81).

| STATE | FEDERAL AID ROUTE | FEDERAL AID PROJECT | STATE ROUTE | STATE PROJECT | SHEET NO. |
|---|---|---|---|---|---|
| VA. | — | | | | |

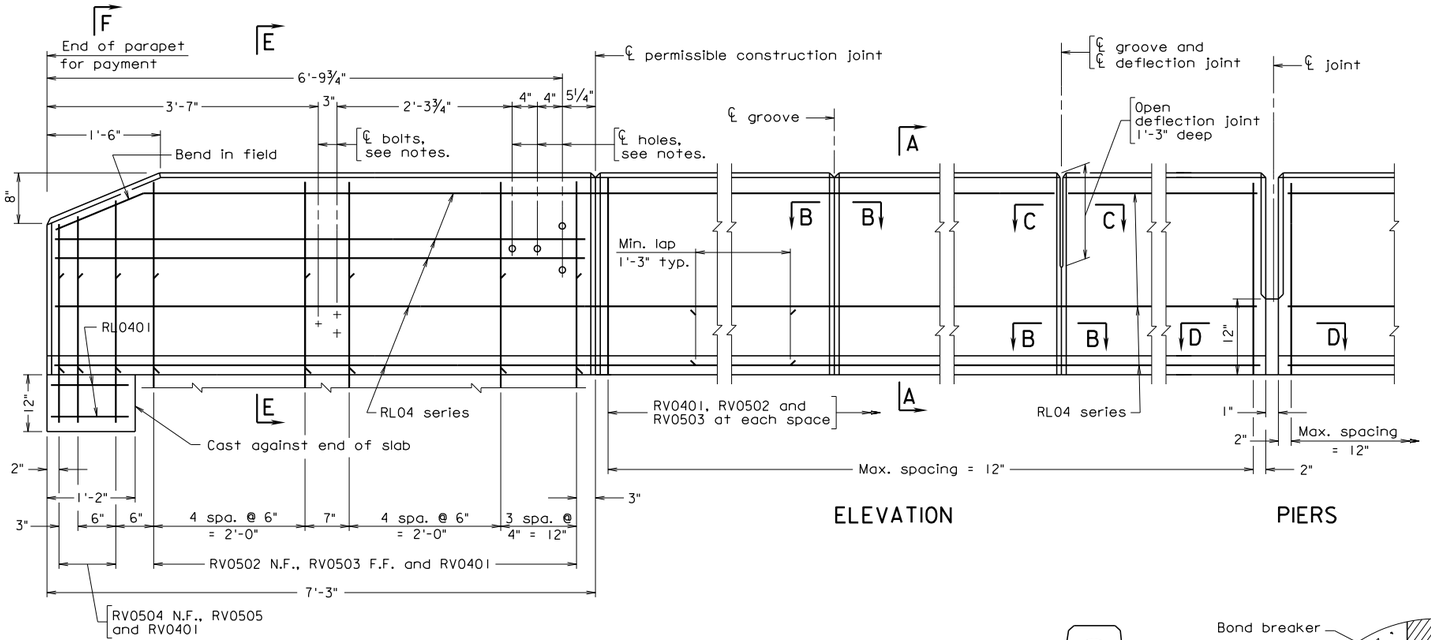


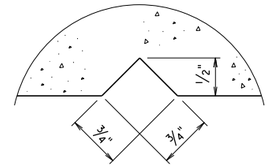


SECTION B-B
Full Scale
Groove detail for both sides of parapet.

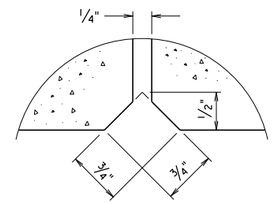


SECTION C-C
Full Scale
Deflection joint detail for both sides of parapet

Notes:

Rounded edges with 1" radius may be used in lieu of bevels along top of parapet.

All reinforcing bars shall be Corrosion Resistant Reinforcing Steel, Class __.

Spacing of grooves to be approximately 8'-0". Spacing of deflection joints shall not exceed three groove spaces.

Barrier delineator size, color, and spacing to be in accordance with the Specifications. Cost of delineator to be included in the price bid for parapet. Reflective surface of barrier delineator, in all instances, to be facing oncoming traffic.

The Contractor shall determine all dimensions and details necessary for installation.

All concrete shall be Class A4.

Terminal walls are detailed to take guardrail attachment GR-FOA-2.

Holes, where shown, shall be formed with sleeves of 1½" dia. nominal pipe.

Bolts, where shown, shall be ⅝" dia. expansion anchor bolts, 6" long to be drilled and installed when rub rail is attached.

Plan dimensions shown are measured in the respective horizontal and vertical planes. The reinforcing steel shown has been detailed based on a standard ¼" per foot cross slope and a 8½" slab depth. The Contractor shall adjust the reinforcing steel as required for other cross slopes and slab depths.

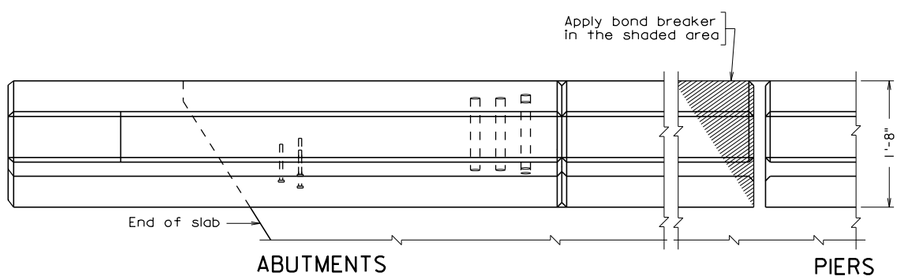


PART PLAN
TYPICAL FOR SKEWED CROSSING

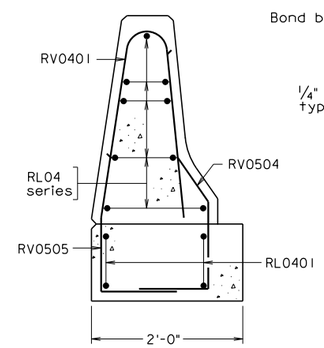


SECTION F-F
For details not shown, see Section A-A.

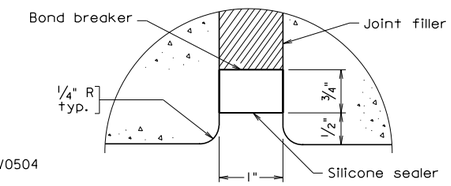


SECTION D-D
Full Scale
Joint detail for both sides of parapet

## REINFORCING STEEL SCHEDULE

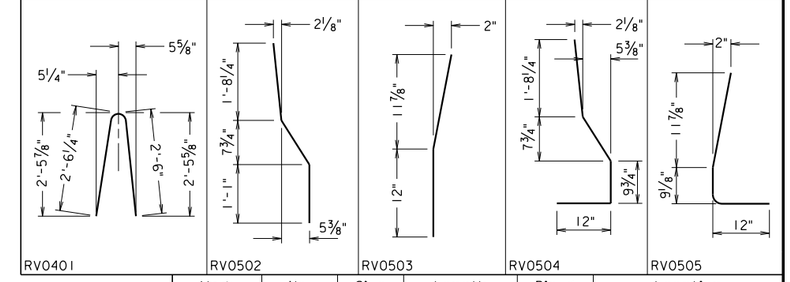


| Mark | No. | Size | Length | Pin ø | Location |
|---|---|---|---|---|---|
| RV0401 | · | #4 | 5'-2" | 4½" | Parapet |
| RV0502 | · | #5 | 3'-7" | 3¾" | Parapet |
| RV0503 | · | #5 | 2'-0" | 3¾" | Parapet |
| RV0504 | · | #5 | 4'-2" | 3¾" | Parapet |
| RV0505 | · | #5 | 2'-7" | 3¾" | Parapet |
| RL0401 | · | #4 | 1'-9" | — | Parapet |
| RL04 | · | #4 | · | — | Parapet |
| · | · | · | · | · | · |
| · | · | · | · | · | · |
| · | · | · | · | · | · |

Dimensions in bending diagram are out to out of bars, except as shown.

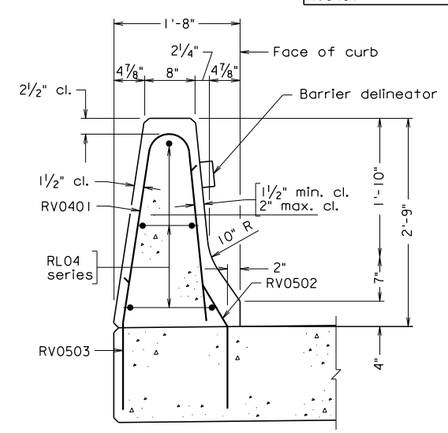


SECTION A-A

Gross concrete quantities (C.Y.) = Lin. ft. x 0.110 for all concrete above roadway slab.

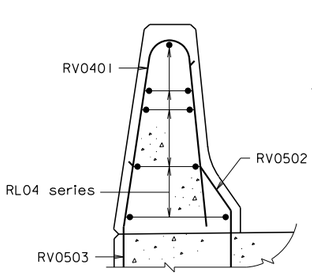


SECTION E-E
Holes and bolts not shown. For details not shown, see Section A-A.

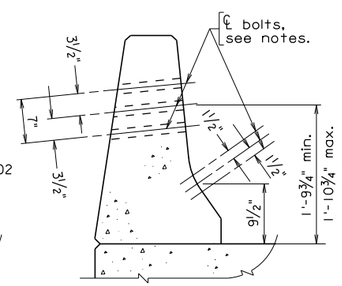


SECTION E-E
Reinforcing steel not shown

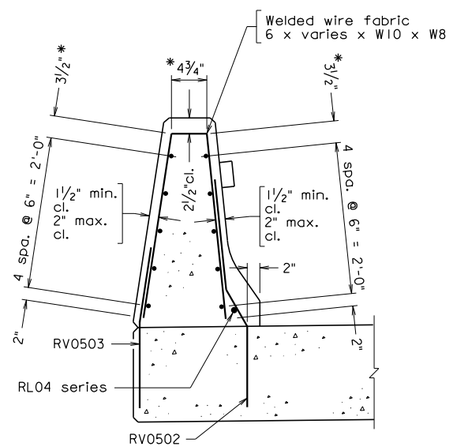


*Dimensions are out-to-out of wires.

SECTION A-A
ALTERNATE REINFORCING STEEL

Scale: 1" = 1'-0" unless otherwise noted

©2012, Commonwealth of Virginia

| No. | Description | Date |
|---|---|---|
| | | |
| | | |
| | | |
| | | |
| | | |
| | | |
| | | |
| | | |

Revisions

COMMONWEALTH OF VIRGINIA
DEPARTMENT OF TRANSPORTATION

STRUCTURE AND BRIDGE DIVISION

# CAST-IN-PLACE CONCRETE PARAPET (F-SHAPE)

| Designed: ..... | Date | Plan No. | Sheet No. |
|---|---|---|---|
| Drawn: ..... | | PBV-5A | |
| Checked: ..... | | | |

PBV_5A.dgn

08-07-2012

Sealed and Signed by:
Julius F.J. Volgyi Jr.
Lic. No. 010487
On the date of
Aug. 7, 2012

A copy of the original sealed and signed standard drawing is on file in the Central Office.

VDOT S&B DIVISION
RICHMOND, VA
STRUCTURAL ENGINEER

PBV-5A

**PRESTRESSED CONCRETE ADJACENT MEMBER STANDARD**
**BOX BEAMS – VIRGINIA ALTERNATE MEMBER CONNECTIONS (VAMC)**
**CAST-IN-PLACE PARAPET (F-SHAPE)**

**NOTES TO DESIGNER:**

Standard is to be used as an insertable sheet when F-shape parapets are used.

Terminal wall is detailed on abutment.

Designer shall modify bars to fit within the top slab of the box beam.

If an initial bituminous overlay is used on the bridge at the time of construction, vertical dimensions and dimensions for reinforcing steel may need to be adjusted The vertical dimensions and dimensions for reinforcing steel shown on this standard are established from the top of the roadway surface for a 1" thick bituminous overlay at the face of parapet curb, $^{1}/_{4}$" per foot cross slope and a 15" slab depth.

If the thickness of the bituminous overlay at the face of parapet curb is greater than 1", vertical dimensions and dimensions for reinforcing steel will need to be adjusted. For example if a 2" overlay at the curb is set, the 4" curb dimension and the overall 2'-9" height of the parapet would need to be adjusted to 5" and 2'-10" respectively (Section A-A). In addition, the $9^{1}/_{2}$" and 1'-10" height of the bolts would need to be adjusted to $10^{1}/_{2}$" and 1'-11" respectively (Section E-E).

**ADD THE FOLLOWING NOTES, DIMENSIONS, DETAILS, ETC. TO STANDARD:**

SECTION A-A:

Modify vertical dimensions (4" curb and 2'-9" parapet height) as noted above if an initial overlay is used on bridge.

SECTION E-E:

Modify vertical dimensions ($9^{1}/_{2}$" curb and 1'-10" bolt locations) as noted above if an initial overlay is used on bridge.

REINFORCING STEEL SCHEDULE:

Modify bars if needed due to slab depth, cross slope or initial overlay if used on bridge.

NOTES:

Complete second note by adding the Class I, II or III of corrosion resistant reinforcing steel required. For additional information on corrosion resistant reinforcing steels (CRR), see Structure and Bridge Division Instructional and Informational Memorandum (current IIM-S&B-81).

| STATE | FEDERAL AID ROUTE | FEDERAL AID PROJECT | STATE ROUTE | STATE PROJECT | SHEET NO. |
|---|---|---|---|---|---|
| VA. | — | | | | |

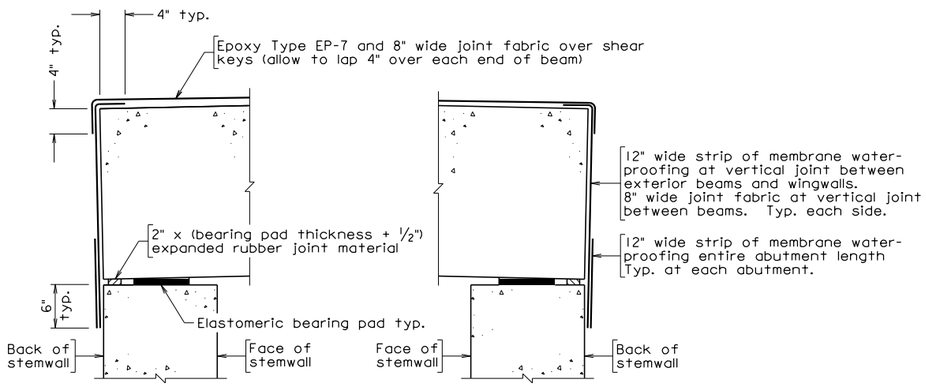


ABUTMENT A ABUTMENT B

## WATERPROOFING MEMBRANE DETAIL

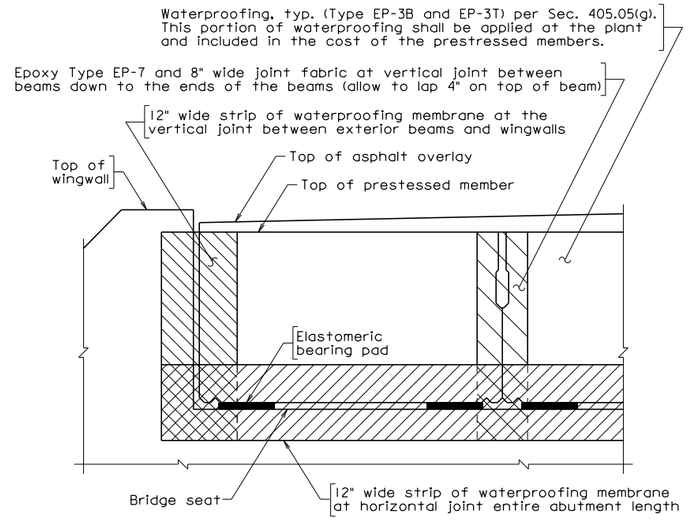


## END OF BEAM VIEW AT ABUTMENTS

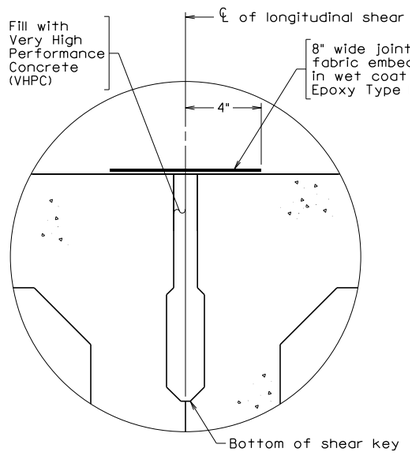


## SHEAR KEY DETAIL

Overlay not shown
Scale: 3" = 1'-0"

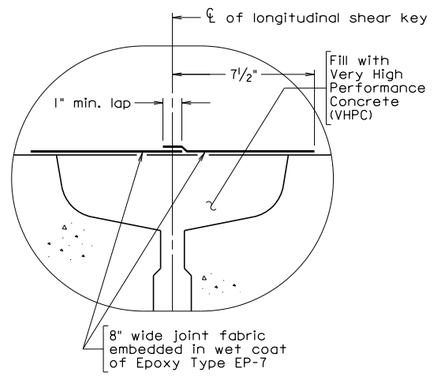


## VIRGINIA ADJACENT MEMBER CONNECTION (VAMC) DETAIL

Overlay not shown
Scale: 3" = 1'-0"

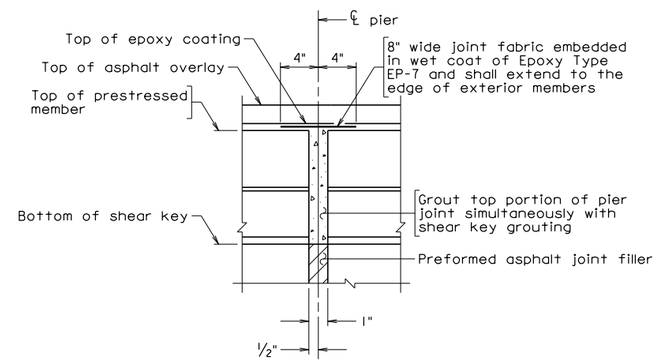


## SECTION THRU PIER JOINTS

Typical all pier joints
Normal to Joint
Not to scale

Notes:

Details shown for 4'-0" x 18" prestressed concrete voided slab. Details similar for other widths and depths.

Epoxy and joint fabric shall not be placed until the VHPC has cured for 28 days unless the Contractor tests trial patches and obtains passing results per Section 431 of the 2016 Road and Bridge Specifications.

Procedure for sealing shear keys and pier joint utilizing Epoxy EP-7 and joint fabric:

Surface preparation, application guidelines, Epoxy EP-7 and sand shall be in accordance with Section 431 of the 2016 Road and Bridge Specifications.

1. Prepare deck surface.

2. Apply a coat of epoxy to the beam ends at the shear keys and then set the joint fabric into the wet epoxy. Allow enough joint fabric to provide for a 4" min. lap on top of beams. Apply additional epoxy over the joint fabric to thoroughly wet the joint fabric. Remove any air pockets under the joint fabric using a short nap paint roller.

3. Apply the first coat of epoxy to beam surface over the grouted shear keys and set the joint fabric (continuous over pier joints) into the wet epoxy. Allow enough joint fabric to provide for a 4" min. lap down the beam ends. Apply additional epoxy over the joint fabric to thoroughly wet the joint fabric and provide sufficient free epoxy to engage the sand. Remove any air pockets under the joint fabric using a short nap paint roller. Apply sand and allow epoxy and sand to cure and then remove loose sand.

4. Apply the first coat of epoxy and sand on the remaining deck surface including pier joint (areas between shear keys). Remove loose sand after epoxy has cured. This will complete the first coat of epoxy overlay.

5. Apply a second coat of epoxy over pier joint and set the joint fabric into the wet epoxy. Apply additional epoxy over the joint fabric to thoroughly wet the joint fabric and provide sufficient free epoxy to engage the sand. Remove any air pockets under the joint fabric using a short nap paint roller. Apply sand and allow epoxy and sand to cure and then remove loose sand.

6. Apply second coat of epoxy and sand, covering remaining surface of deck including shear keys. Remove loose sand after the epoxy has cured.

7. Any epoxy spills outside the limits of the shear key treatment shall be covered with sand while the epoxy is still wet.

The cost of Epoxy Type EP-7, sand and joint fabric shall be included in the cost of the prestressed members.

Joint fabric from the VDOT Special Products Evaluation List under Joint Fabrics shall be used.

Notes for End of Beam Membrane Waterproofing:

The membrane shall be applied to the end of beams at abutments at the vertical joint between exterior beams and wingwalls and the horizontal joint as shown in END OF BEAM VIEW AT ABUTMENTS.

The membrane shall consist of a Type III preformed membrane system in accordance with Section 429 of the 2016 Road and Bridge Specifications. The cost of the membrane shall be included in the cost of the prestressed members.

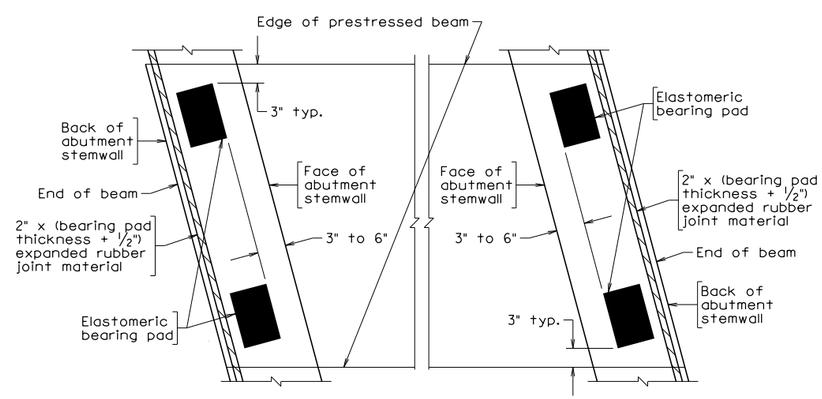


PART PLAN AT ABUTMENT A PART PLAN AT ABUTMENT B

## END BEARING DETAILS

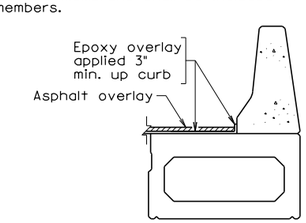


## SECTION THRU PARAPET

Scale: 1/2" = 1'-0"

Scale: 1" = 1'-0" unless otherwise shown

©2016, Commonwealth of Virginia

| No. | Description | Date |
|---|---|---|
| | Revisions | |

COMMONWEALTH OF VIRGINIA
DEPARTMENT OF TRANSPORTATION

STRUCTURE AND BRIDGE DIVISION

# END BEARING AND WATERPROOFING DETAILS FOR ASPHALT OVERLAY

| Designed: S&B DIV | Date | Plan No. | Sheet No. |
|---|---|---|---|
| Drawn: S&B DIV | | PBV-6A | |
| Checked: S&B DIV | | | |

Sealed and Signed by:
Junyi Meng
Lic. No. 033572
On the date of December 28, 2016

A copy of the original sealed and signed standard drawing is on file in the Central Office.

VDOT S&B DIVISION
RICHMOND, VA
STRUCTURAL ENGINEER

12-28-2016

PBV-6A

PBV_6A.dgn

**PRESTRESSED CONCRETE ADJACENT MEMBER STANDARD**
**BOX BEAMS – VIRGINIA ADJACENT MEMBER CONNECTIONS (VAMC)**
**WATERPROOFING DETAILS FOR ASPHALT OVERLAY**

**NOTES TO DESIGNER:**

Include standard PBV-1, PBV-2A, PBV-3 and PBV-4 in the plans when using this standard.

Include standard PBV-5A in the plans when using F-shape parapet.

Details are shown for 4'-0" x 27" prestressed concrete box beams. Details are similar for other widths and depths and alterations are not necessary unless indicated below. Remove scales from details and indicate sheet is Not to Scale at bottom when other widths and depths are used. Scales are shown on the standard sheet to assist Designers when detail changes are necessary.

Cells for completing the standard are located in the PSC_BB.CEL library.

**ADD THE FOLLOWING NOTES, DIMENSIONS, DETAILS, ETC. TO STANDARD:**

WATERPROOFING MEMBRANE DETAIL:

Modify abutment or bearing details as necessary.

END OF SLAB VIEW AT ABUTMENTS:

Modify details when necessary to convey waterproofing membrane limits due to abutment details.

SECTION THRU PIER JOINTS:

Do not remove detail for bridges without piers. Modify the detail when sleeves through the beam ends for anchor bolts are used at fixed bearing locations.

SECTION THRU PARAPET:

Replace with parapet or other rail as needed.

END BEARING DETAILS:

Modify details as necessary where laminated elastomeric bearings are used to account for grade, skew or longer expansion lengths. Where grades exceed 1 percent and laminated elastomeric bearings are not used, add cell for SLABS ON GRADIENT IN EXCESS OF 1% to standards PBV -3 and -4.

NOTES:

Do not alter procedure for bridges without piers.

| STATE | FEDERAL AID ROUTE | FEDERAL AID PROJECT | STATE ROUTE | STATE PROJECT | SHEET NO. |
|---|---|---|---|---|---|
| VA. | — | | | | |

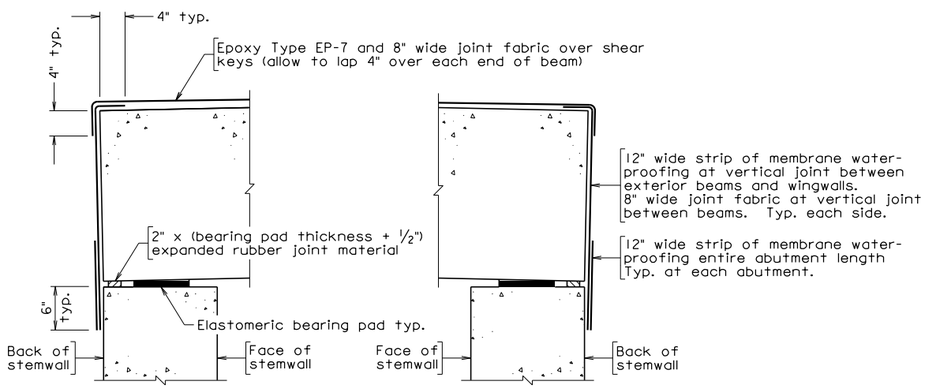


WATERPROOFING MEMBRANE DETAIL

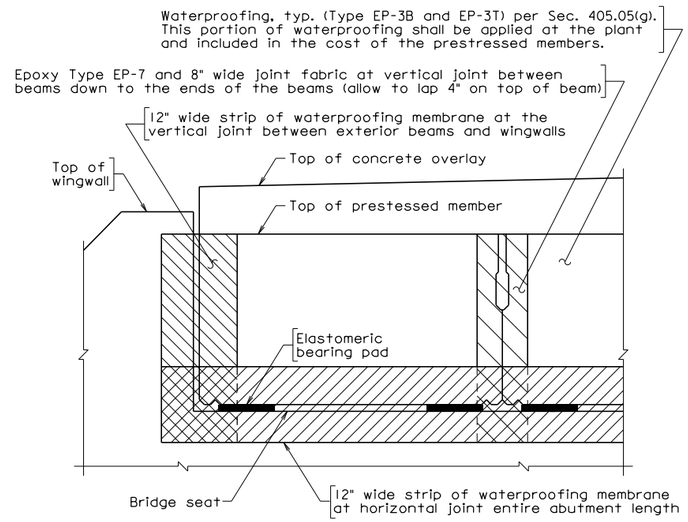


END OF BEAM VIEW AT ABUTMENTS

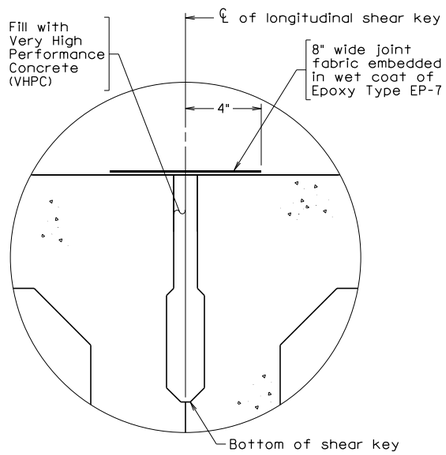


SHEAR KEY DETAIL

Overlay not shown
Scale: 3" = 1'-0"

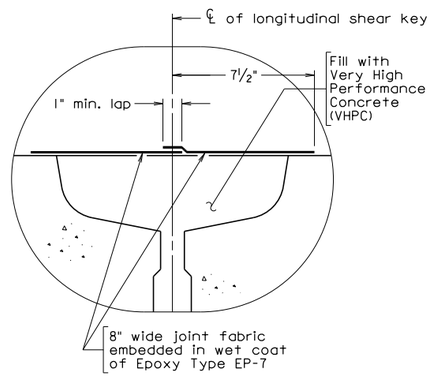


VIRGINIA ADJACENT MEMBER CONNECTION (VAMC) DETAIL

Overlay not shown
Scale: 3" = 1'-0"

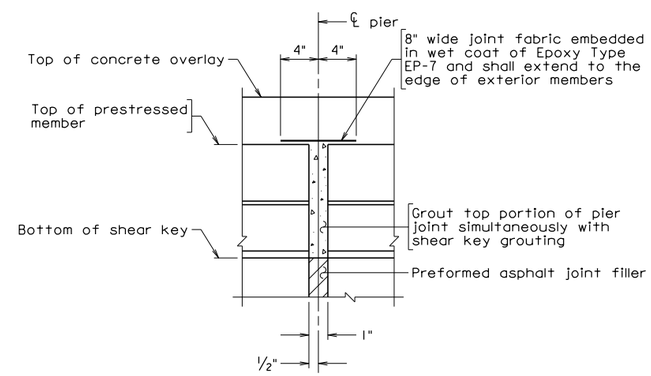


SECTION THRU PIER JOINTS

Typical all pier joints
Normal to joint
Not to scale

Notes:

Details shown for 4'-0" x 18" prestressed concrete voided slab. Details similar for other widths and depths.

Epoxy and joint fabric shall not be placed until the VHPC has cured for 28 days unless the Contractor tests trial patches and obtains passing results per Section 431 of the 2016 Road and Bridge Specifications.

Procedure for sealing shear keys and pier joint utilizing Epoxy EP-7 and joint fabric:

Surface preparation, application guidelines, Epoxy EP-7 and sand shall be in accordance with Section 431 of the 2016 Road and Bridge Specifications.

1. Prepare deck surface.

2. Apply a coat of epoxy to the beam ends at the shear keys and then set the joint fabric into the wet epoxy. Allow enough joint fabric to provide for a 4" min. lap on top of beams. Apply additional epoxy over the joint fabric to thoroughly wet the joint fabric. Remove any air pockets under the joint fabric using a short nap paint roller.

3. Apply the first coat of epoxy to beam surface over the grouted shear keys and set the joint fabric (continuous over pier joints) into the wet epoxy. Allow enough joint fabric to provide for a 4" min. lap down the beam ends. Apply additional epoxy over the joint fabric to thoroughly wet the joint fabric and provide sufficient free epoxy to engage the sand. Remove any air pockets under the joint fabric using a short nap paint roller. Apply sand and allow epoxy and sand to cure and then remove loose sand.

4. Apply the first coat of epoxy over pier joint and set the joint fabric into the wet epoxy. Apply additional epoxy over the joint fabric to thoroughly wet the joint fabric and provide sufficient free epoxy to engage the sand. Remove any air pockets under the joint fabric using a short nap paint roller. Apply sand and allow epoxy and sand to cure and then remove loose sand.

5. Apply a second coat of epoxy and sand over shear keys and pier joint. Remove loose sand after epoxy has cured.

6. Any epoxy spills outside the limits of the shear key treatment shall be covered with sand while the epoxy is still wet.

The cost of Epoxy Type EP-7, sand and joint fabric shall be included in the cost of the prestressed members.

Joint fabric from the VDOT Special Products Evaluation List under Joint Fabrics shall be used.

Notes for End of Beam Membrane Waterproofing:

The membrane shall be applied to the end of beams at abutments at the vertical joint between exterior beams and wingwalls and the horizontal joint as shown in END OF BEAM VIEW AT ABUTMENTS.

The membrane shall consist of a Type III preformed membrane system in accordance with Section 429 of the 2016 Road and Bridge Specifications. The cost of the membrane shall be included in the cost of the prestressed members.

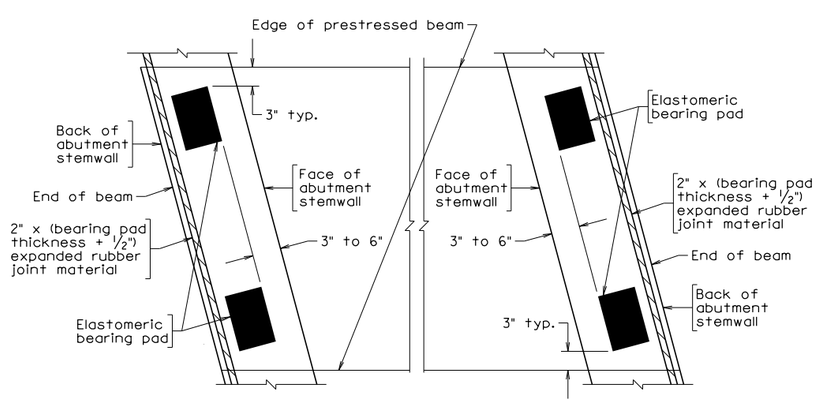


PART PLAN AT ABUTMENT A

PART PLAN AT ABUTMENT B

END BEARING DETAILS

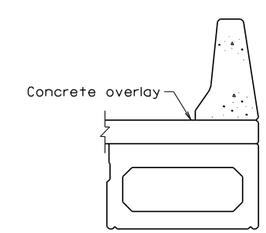


SECTION THRU PARAPET

Scale: 1/2" = 1'-0"

Scale: 1" = 1'-0" unless otherwise shown

©2016, Commonwealth of Virginia

PBV_6B.dgn

12-28-2016

PBV-6B

Sealed and Signed by:
Junyi Meng
Lic. No. 033572
On the date of
December 28, 2016

A copy of the original sealed and signed standard drawing is on file in the Central Office.

VDOT S&B DIVISION
RICHMOND, VA
STRUCTURAL ENGINEER

| No. | Description | Date |
|---|---|---|
| | | |
| | | |
| | | |
| | | |
| | | |
| | | |
| | | |

Revisions

COMMONWEALTH OF VIRGINIA
DEPARTMENT OF TRANSPORTATION

STRUCTURE AND BRIDGE DIVISION

# END BEARING AND WATERPROOFING DETAILS FOR CONCRETE OVERLAY

Designed: S&B DIV
Drawn: S&B DIV
Checked: S&B DIV

Date

Plan No. PBV-6B

Sheet No.

**PRESTRESSED CONCRETE ADJACENT MEMBER STANDARD**
**BOX BEAMS – VIRGINIA ADJACENT MEMBER CONNECTIONS (VAMC)**
**WATERPROOFING DETAILS FOR CONCRETE OVERLAY**

**NOTES TO DESIGNER:**

Include standard PBV-1, PBV-2B, PBV-3 and PBV-4 in the plans when using this standard.

Include standard PBV-5A in the plans when using F-shape parapet.

Details are shown for 4'-0" x 27" prestressed concrete box beams. Details are similar for other widths and depths and alterations are not necessary unless indicated below. Remove scales from details and indicate sheet is Not to Scale at bottom when other widths and depths are used. Scales are shown on the standard sheet to assist Designers when detail changes are necessary.

Cells for completing the standard are located in the PSC_BB.CEL library.

**ADD THE FOLLOWING NOTES, DIMENSIONS, DETAILS, ETC. TO STANDARD:**

WATERPROOFING MEMBRANE DETAIL:

Modify abutment or bearing details as necessary.

END OF SLAB VIEW AT ABUTMENTS:

Modify details when necessary to convey waterproofing membrane limits due to abutment details.

SECTION THRU PIER JOINTS:

Do not remove detail for bridges without piers. Modify the detail when sleeves through the beam ends for anchor bolts are used at fixed bearing locations.

SECTION THRU PARAPET:

Replace with parapet or other rail as needed.

END BEARING DETAILS:

Modify details as necessary where laminated elastomeric bearings are used to account for grade, skew or longer expansion lengths. Where grades exceed 1 percent and laminated elastomeric bearings are not used, add cell for SLABS ON GRADIENT IN EXCESS OF 1% to standards PBV -3 and -4.

NOTES:

Do not alter procedure for bridges without piers.

**PRESTRESSED CONCRETE ADJACENT MEMBER STANDARDS**
**CELL LIBRARY: PSC_VS.CEL**

**INDEX OF CELLS**


| CELL NAME | FILE NO. | DESCRIPTION | DATE |
|---|---|---|---|
| **PST Series: Prestressed Voided Slab Transverse Tendon Details** | | | |
| ST1E0S3E | PSCV-1 | PST-1: Erection Diagram; 0° skew; 3'-0"; Edge on CL | 28Dec2016 |
| ST1E0S3O | PSCV-1 | PST-1: Erection Diagram; 0° skew; 3'-0"; CL on slab | 28Dec2016 |
| ST1E0S4E | PSCV-2 | PST-1: Erection Diagram; 0° skew; 4'-0"; Edge on CL | 28Dec2016 |
| ST1E0S4O | PSCV-3 | PST-1: Erection Diagram; 0° skew; 4'-0"; CL on slab | 28Dec2016 |
| ST2DETAA | PSCV-3 | PST-2: Detail A, 15" / 18" / 21" | 28Dec2016 |
| ST2TSALG | PSCV-4 | PST-2: Transv. Section, asphalt overlay, level slabs | 28Dec2016 |
| ST2TSAS3 | PSCV-5 | PST-2: Tr. Section, asphalt overlay, sloped slabs, 3'-0" | 28Dec2016 |
| ST2TSAS4 | PSCV-6 | PST-2: Tr. Section, asphalt overlay, sloped slabs, 4'-0" | 28Dec2016 |
| ST2TSCLG | PSCV-7 | PST-2: Transv. Section, concrete overlay, level slabs | 28Dec2016 |
| ST2TSCS3 | PSCV-8 | PST-2: Tr. Section, concrete overlay, sloped slabs, 3'-0" | 28Dec2016 |
| ST2TSCS4 | PSCV-9 | PST-2: Tr. Section, concrete overlay, sloped slabs, 4'-0" | 28Dec2016 |
| ST2TYPS3 | PSCV-10 | PST-2: Typical Sections, 3'-0" x 15" / 18" / 21" | 28Dec2016 |
| ST2TYPS4 | PSCV-11 | PST-2: Typical Sections, 4'-0" x 15" / 18" / 21" | 28Dec2016 |
| ST3ANCHD | PSCV-12 | PST-3: Anchor Detail and Alternate Anchor Detail | 28Dec2016 |
| ST3ELEV0 | PSCV-13 | PST-3: Elevation; 0° skew; 15" / 18" / 21" | 28Dec2016 |
| ST3PLANB | PSCV-13 | PST-3: Plan; 0° skew; both 3'-0" and 4'-0" widths | 28Dec2016 |
| ST3SPRD3 | PSCV-14 | PST-3: Strand Pattern; Reinforcing Details 3'-0" width | 28Dec2016 |
| ST3SPRD4 | PSCV-15 | PST-3: Strand Pattern; Reinforcing Details 4'-0" width | 28Dec2016 |
| ST34GRAD | PSCV-16 | PST-3 / -4: Slabs on Gradient in Excess of 1% | 28Dec2016 |
| ST4ELEV0 | PSCV-17 | PST-4: Elevation; 0° skew; 15" / 18" / 21" | 28Dec2016 |
| ST4PLANB | PSCV-17 | PST-4: Plan; 0° skew; both 3'-0" and 4'-0" widths | 28Dec2016 |
| ST4SPRD3 | PSCV-18 | PST-4: Strand Pattern; Reinforcing Details 3'-0" width | 28Dec2016 |
| ST4SPRD4 | PSCV-19 | PST-4: Strand Pattern; Reinforcing Details 4'-0" width | 28Dec2016 |
| ST5STRAI | PSCV-20 | PST-5: Section Thru Rail | 28Dec2016 |

**PRESTRESSED CONCRETE ADJACENT MEMBER STANDARDS**
**CELL LIBRARY: PSC_VS.CEL**

**INDEX OF CELLS**

| CELL NAME | FILE NO. | DESCRIPTION | DATE |
|---|---|---|---|
| **PSV Series: Prestressed Voided Slab Virginia Adjacent Member Connection Details** | | | |
| SV1E0S3E | PSCV-21 | PSV-1: Erection Diagram; 0° skew; 3'-0"; Edge on CL | 28Dec2016 |
| SV1E0S3O | PSCV-21 | PSV-1: Erection Diagram; 0° skew; 3'-0"; CL on slab | 28Dec2016 |
| SV1E0S4E | PSCV-22 | PSV-1: Erection Diagram; 0° skew; 4'-0"; Edge on CL | 28Dec2016 |
| SV1E0S4O | PSCV-23 | PSV-1: Erection Diagram; 0° skew; 4'-0"; CL on slab | 28Dec2016 |
| SV2DETAA | PSCV-23 | PSV-2: Detail A, 15" / 18" / 21" | 28Dec2016 |
| SV2TSALG | PSCV-24 | PSV-2: Transv. Section, asphalt overlay, level slabs | 28Dec2016 |
| ST2TSAS3 | PSCV-25 | PSV-2: Tr. Section, asphalt overlay, sloped slabs, 3'-0" | 28Dec2016 |
| SV2TSAS4 | PSCV-26 | PSV-2: Tr. Section, asphalt overlay, sloped slabs, 4'-0" | 28Dec2016 |
| SV2TSCLG | PSCV-27 | PSV-2: Transv. Section, concrete overlay, level slabs | 28Dec2016 |
| ST2TSCS3 | PSCV-28 | PSV-2: Tr. Section, concrete overlay, sloped slabs, 3'-0" | 28Dec2016 |
| SV2TSCS4 | PSCV-29 | PSV-2: Tr. Section, concrete overlay, sloped slabs, 4'-0" | 28Dec2016 |
| SV2TYPS3 | PSCV-30 | PSV-2: Typical Sections, 3'-0" x 15" / 18" / 21" | 28Dec2016 |
| SV2TYPS4 | PSCV-31 | PSV-2: Typical Sections, 4'-0" x 15" / 18" / 21" | 28Dec2016 |
| SV3ANCHD | PSCV-32 | PSV-3: Anchor Detail and Alternate Anchor Detail | 28Dec2016 |
| SV3ELEV0 | PSCV-33 | PSV-3 Elevation; 0° skew; 15" / 18" / 21" | 28Dec2016 |
| SV3PLANB | PSCV-33 | PSV-3 Plan; 0° skew; both 3'-0" and 4'-0" widths | 28Dec2016 |
| SV3SPRD3 | PSCV-34 | PSV-3 Strand Pattern; Reinforcing Details 3'-0" width | 28Dec2016 |
| SV3SPRD4 | PSCV-35 | PSV-3 Strand Pattern; Reinforcing Details 4'-0" width | 28Dec2016 |
| SV34GRAD | PSCV-36 | PSV-3 / -4: Slabs on Gradient in Excess of 1% | 28Dec2016 |
| SV4ELEV0 | PSCV-37 | PSV-4 Elevation; 0° skew; 15" / 18" / 21" | 28Dec2016 |
| SV4PLANB | PSCV-37 | PSV-4 Plan; 0° skew; both 3'-0" and 4'-0" widths | 28Dec2016 |
| SV4SPRD3 | PSCV-38 | PSV-4 Strand Pattern; Reinforcing Details 3'-0" width | 28Dec2016 |
| SV4SPRD4 | PSCV-39 | PSV-4 Strand Pattern; Reinforcing Details 4'-0" width | 28Dec2016 |
| SV5STRAI | PSCV-40 | PSV-5: Section Thru Rail | 28Dec2016 |

**PRESTRESSED CONCRETE ADJACENT MEMBER STANDARDS**
**CELL LIBRARY: PSC_BB.CEL**

**INDEX OF CELLS**

| CELL NAME | FILE NO. | DESCRIPTION | DATE |
|---|---|---|---|
| **PBT Series: Prestressed Box Beam Transverse Tendon Details** | | | |
| BT1E0S3E | PSCB-1 | PBT-1: Erection Diagram; 0° skew; 3'-0"; Edge on CL | 28Dec2016 |
| BT1E0S3O | PSCB-1 | PBT-1: Erection Diagram; 0° skew; 3'-0"; CL on slab | 28Dec2016 |
| BT1E0S4E | PSCB-2 | PBT-1: Erection Diagram; 0° skew; 4'-0"; Edge on CL | 28Dec2016 |
| BT1E0S4O | PSCB-3 | PBT-1: Erection Diagram; 0° skew; 4'-0"; CL on slab | 28Dec2016 |
| BT2DETAA | PSCB-3 | PBT-2: Detail A | 28Dec2016 |
| BT2TSALG | PSCB-4 | PBT-2: Transv. Section, asphalt overlay, level slabs | 28Dec2016 |
| BT2TSAS3 | PSCB-5 | PBT-2: Tr. Section, asphalt overlay, sloped slabs, 3'-0" | 28Dec2016 |
| BT2TSAS4 | PSCB-6 | PBT-2: Tr. Section, asphalt overlay, sloped slabs, 4'-0" | 28Dec2016 |
| BT2TSCLG | PSCB-7 | PBT-2: Transv. Section, concrete overlay, level slabs | 28Dec2016 |
| BT2TSCS3 | PSCB-8 | PBT-2: Tr. Section, concrete overlay, sloped slabs, 3'-0" | 28Dec2016 |
| BT2TSCS4 | PSCB-9 | PBT-2: Tr. Section, concrete overlay, sloped slabs, 4'-0" | 28Dec2016 |
| BT2TYPS3 | PSCB-10 | PBT-2: Typical Sections, 3'-0" x 27" / 33" / 39" / 42" | 28Dec2016 |
| BT2TYPS4 | PSCB-11 | PBT-2: Typical Sections, 4'-0" x 27" / 33" / 39" / 42" | 28Dec2016 |
| BT3ANCHD | PSCB-12 | PBT-3: Anchor Detail and Alternate Anchor Detail | 28Dec2016 |
| BT3ELEV0 | PSCB-13 | PBT-3: Elevation; 0° skew; 27" / 33" / 39" / 42" | 28Dec2016 |
| BT3PLANB | PSCB-14 | PBT-3: Plan; 0° skew; both 3'-0" and 4'-0" widths | 28Dec2016 |
| BT3SPRD3 | PSCB-15 | PBT-3: Strand Pattern; Reinforcing Details 3'-0" width | 28Dec2016 |
| BT3SPRD4 | PSCB-16 | PBT-3: Strand Pattern; Reinforcing Details 4'-0" width | 28Dec2016 |
| BT34GRAD | PSCB-17 | PBT-3 / -4: Beams on Gradient in Excess of 1% | 28Dec2016 |
| BT4ELEV0 | PSCB-18 | PBT-4: Elevation; 0° skew; 27" / 33" / 39" / 42" | 28Dec2016 |
| BT4PLANB | PSCB-19 | PBT-4: Plan; 0° skew; both 3'-0" and 4'-0" widths | 28Dec2016 |
| BT4SPRD3 | PSCB-20 | PBT-4: Strand Pattern; Reinforcing Details 3'-0" width | 28Dec2016 |
| BT4SPRD4 | PSCB-21 | PBT-4: Strand Pattern; Reinforcing Details 4'-0" width | 28Dec2016 |
| BT5STRAI | PSCB-22 | PBT-5: Section Thru Rail | 28Dec2016 |

**PRESTRESSED CONCRETE ADJACENT MEMBER STANDARDS**
**CELL LIBRARY: PSC_BB.CEL**

**INDEX OF CELLS**

| CELL NAME | FILE NO. | DESCRIPTION | DATE |
|---|---|---|---|
| **PBV Series: Prestressed Box Beam Virginia Adjacent Member Connection Details** | | | |
| BV1E0S3E | PSCB-23 | PBV-1: Erection Diagram; 0° skew; 3'-0"; Edge on CL | 28Dec2016 |
| BV1E0S3O | PSCB-23 | PBV-1: Erection Diagram; 0° skew; 3'-0"; CL on slab | 28Dec2016 |
| BV1E0S4E | PSCB-24 | PBV-1: Erection Diagram; 0° skew; 4'-0"; Edge on CL | 28Dec2016 |
| BV1E0S4O | PSCB-25 | PBV-1: Erection Diagram; 0° skew; 4'-0"; CL on slab | 28Dec2016 |
| BV2DETAA | PSCB-25 | PBV-2: Detail A | 28Dec2016 |
| BV2TSALG | PSCB-26 | PBV-2: Transv. Section, asphalt overlay, level slabs | 28Dec2016 |
| BV2TSAS3 | PSCB-27 | PBV-2: Tr. Section, asphalt overlay, sloped slabs, 3'-0" | 28Dec2016 |
| BV2TSAS4 | PSCB-28 | PBV-2: Tr. Section, asphalt overlay, sloped slabs, 3'-0" | 28Dec2016 |
| BV2TSCLG | PSCB-29 | PBV-2: Transv. Section, concrete overlay, level slabs | 28Dec2016 |
| BV2TSCS3 | PSCB-30 | PBV-2: Tr. Section, concrete overlay, sloped slabs, 3'-0" | 28Dec2016 |
| BV2TSCS4 | PSCB-31 | PBV-2: Tr. Section, concrete overlay, sloped slabs, 3'-0" | 28Dec2016 |
| BV2TYPS3 | PSCB-32 | PBV-2: Typical Sections, 3'-0" x 27" / 33" / 39" / 42" | 28Dec2016 |
| BV2TYPS4 | PSCB-33 | PBV-2: Typical Sections, 4'-0" x 27" / 33" / 39" / 42" | 28Dec2016 |
| BV3ANCHD | PSCB-34 | PBV-3: Anchor Detail and Alternate Anchor Detail | 28Dec2016 |
| BV3ELEV0 | PSCB-35 | PBV-3: Elevation; 0° skew, 27" / 33" / 39" / 42" | 28Dec2016 |
| BV3PLANB | PSCB-36 | PBV-3: Plan; 0° skew; 3'-0" and 4'-0" widths | 28Dec2016 |
| BV3SPRD3 | PSCB-37 | PBV-3: Strand Pattern; Reinforcing Details 3'-0" width | 28Dec2016 |
| BV3SPRD4 | PSCB-38 | PBV-3: Strand Pattern; Reinforcing Details 4'-0" width | 28Dec2016 |
| BV34GRAD | PSCB-39 | PBV-3 / -4: Beams on Gradient in Excess of 1% | 28Dec2016 |
| BV4ELEV0 | PSCB-40 | PBV-4: Elevation; 0° skew, 27" / 33" / 39" / 42" | 28Dec2016 |
| BV4PLANB | PSCB-41 | PBV-4: Plan; 0° skew; 3'-0" and 4'-0" widths | 28Dec2016 |
| BV4SPRD3 | PSCB-42 | PBV-4: Strand Pattern; Reinforcing Details 3'-0" width | 28Dec2016 |
| BV4SPRD4 | PSCB-43 | PBV-4: Strand Pattern; Reinforcing Details 4'-0" width | 28Dec2016 |
| BV5STRAI | PSCB-44 | PBV-5: Section Thru Rail | 28Dec2016 |

| CELL | CELL NAME | CELL DESCRIPTION |
|---|---|---|
| | **ST1E0S3E** | Erection Diagram; 0° skew; 3'-0"; Edge on CL<br>Use with standard PST-1. |

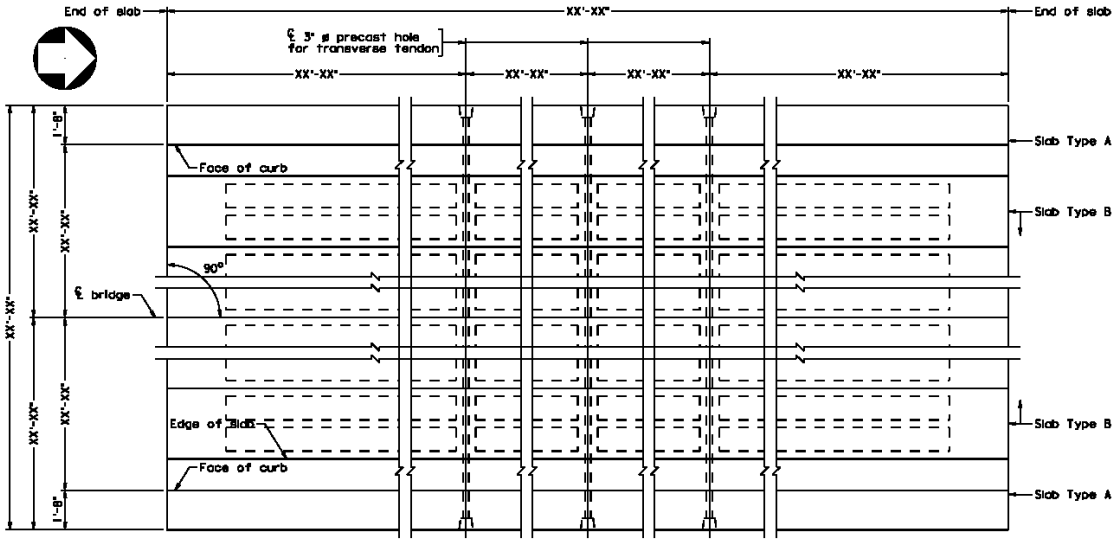


**ERECTION DIAGRAM**

Shear key limits not shown for clarity

| | | |
|---|---|---|
| | **ST1E0S3O** | Erection Diagram; 0° skew; 3'-0"; CL on slab<br>Use with standard PST-1. |

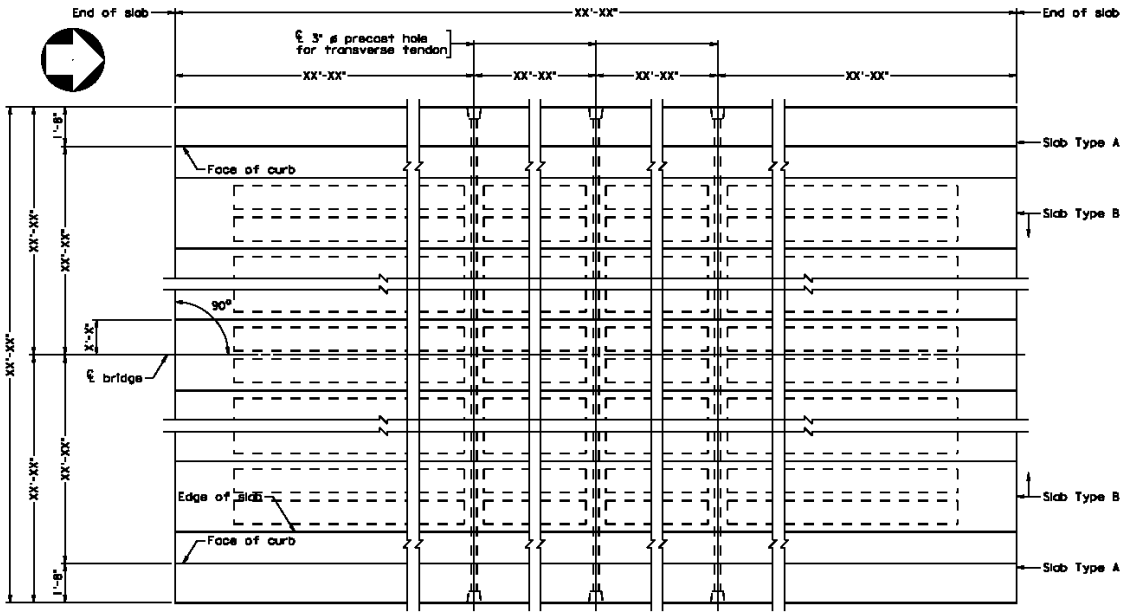


**ERECTION DIAGRAM**

Shear key limits not shown for clarity

| CELL | CELL NAME | CELL DESCRIPTION |
|---|---|---|
| | **ST1E0S4E** | Erection Diagram; 0° skew; 4'-0"; Edge on CL<br>Use with standard PST-1. |

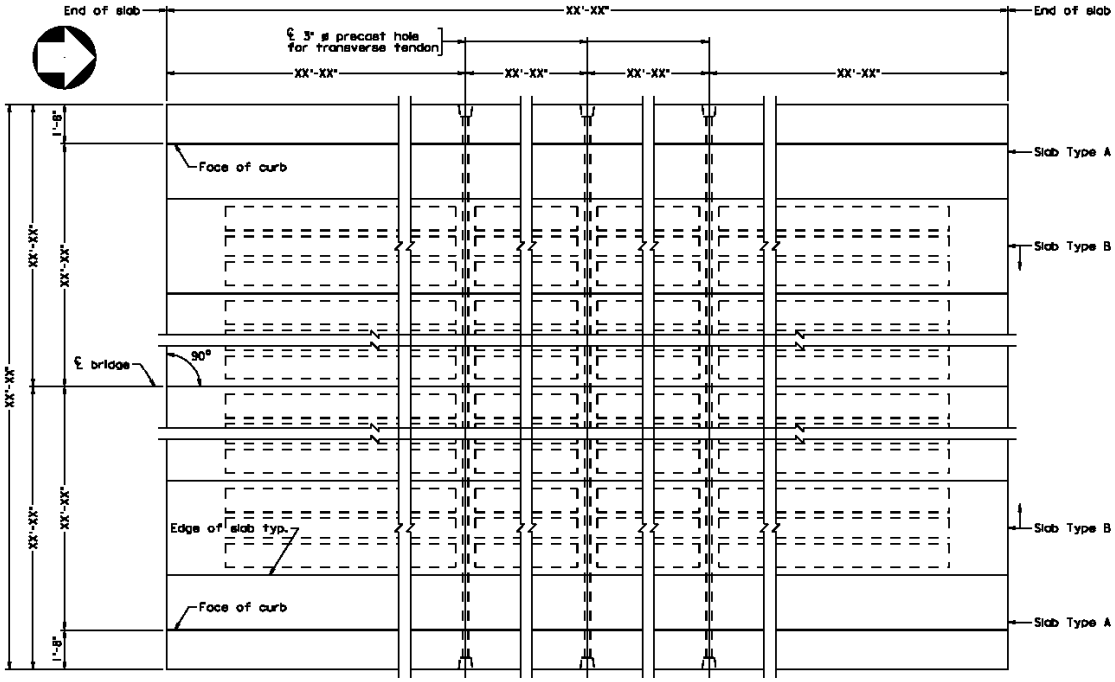


**ERECTION DIAGRAM**

Shear key limits not shown for clarity

| CELL | CELL NAME | CELL DESCRIPTION |
|---|---|---|
| | **ST1E0S4O** | Erection Diagram; 0° skew; 4'-0"; Edge on CL<br>Use with standard PST-1. |

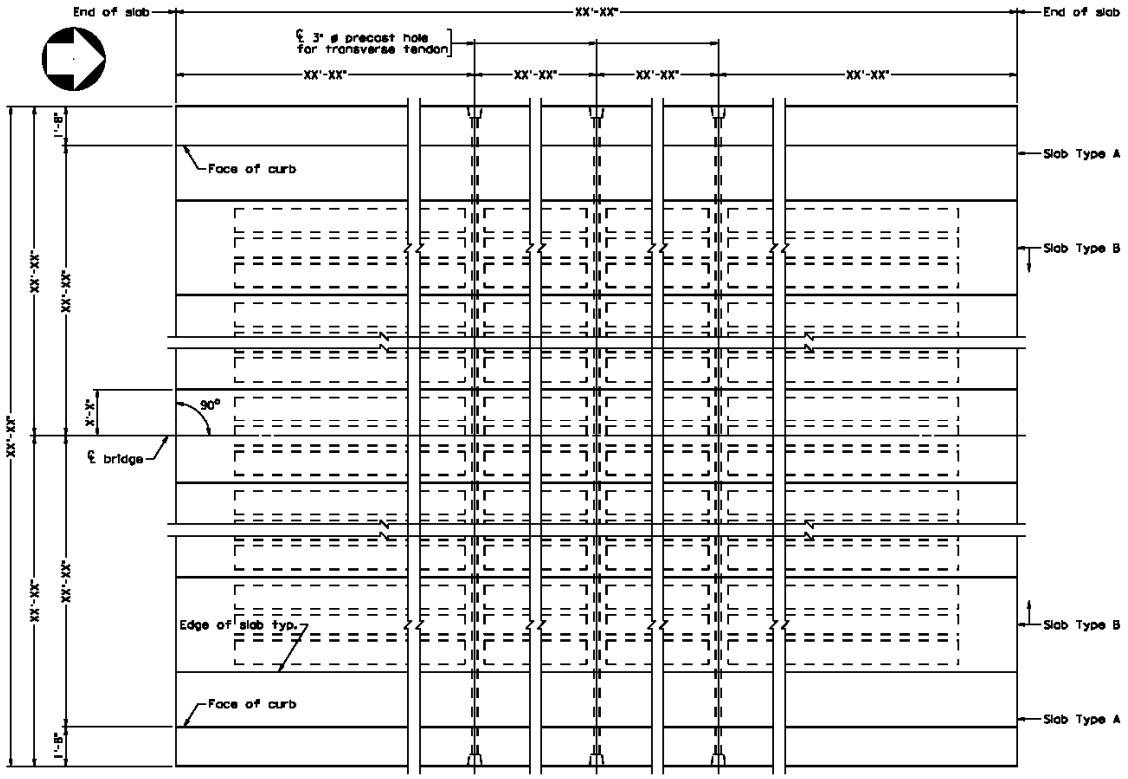


**ERECTION DIAGRAM**

Shear key limits not shown for clarity

| | | |
|---|---|---|
| | **ST2DETAA** | Detail A, 15" / 18" / 21"<br>Use with standard PST-2A and PST-2B. |

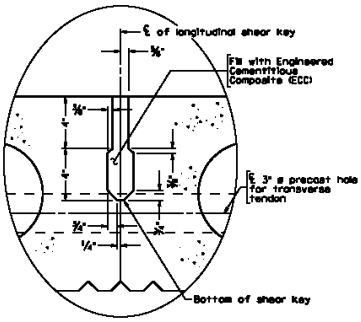


**DETAIL A**

Overlay not shown
(Shown for 15" prestressed voided slab)

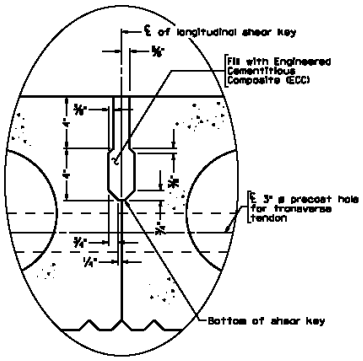


**DETAIL A**

Overlay not shown
(Shown for 18" prestressed voided slab)

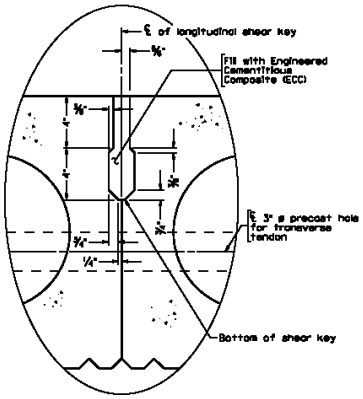


**DETAIL A**

Overlay not shown
(Shown for 21" prestressed voided slab)

| CELL | CELL NAME | CELL DESCRIPTION |
|---|---|---|
| | **ST2TSALG** | Transverse Section, asphalt overlay, level slabs, generic; Use with standard PST-2A. |

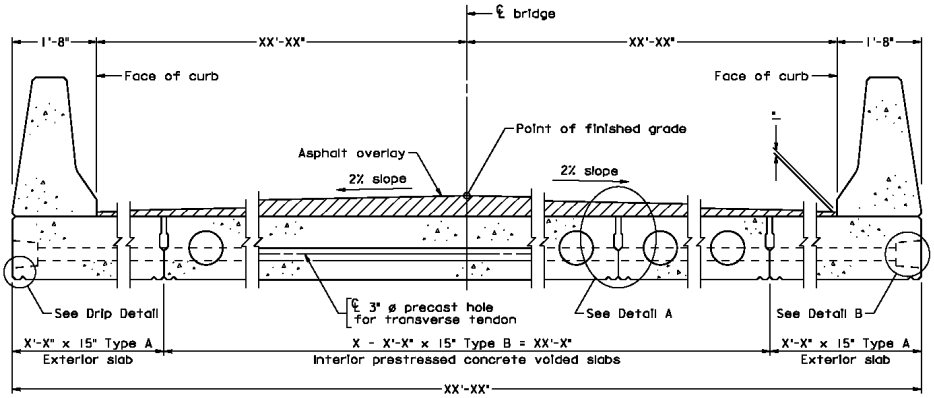


TRANSVERSE SECTION

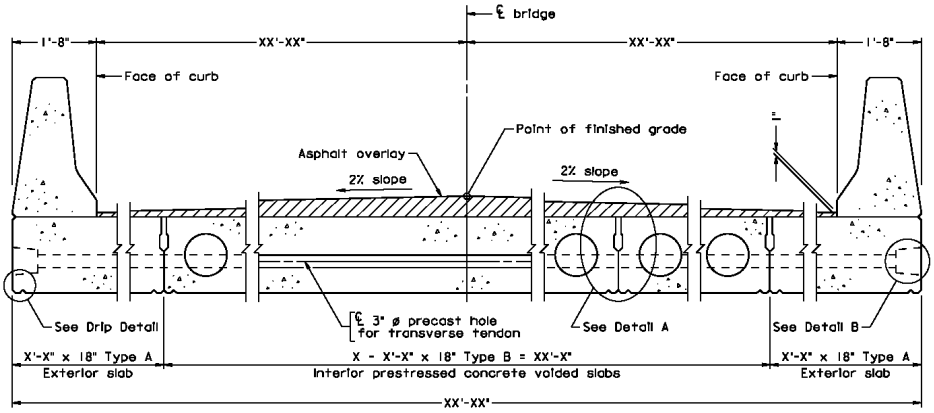


TRANSVERSE SECTION

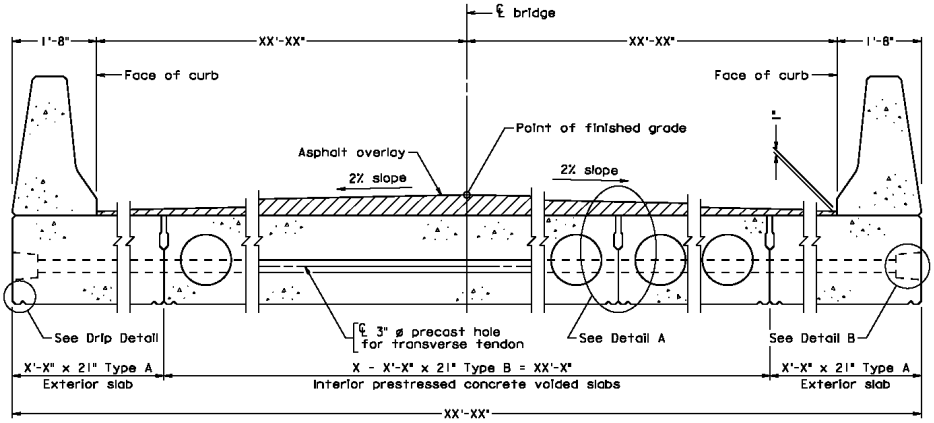


TRANSVERSE SECTION

| CELL | CELL NAME | CELL DESCRIPTION |
|---|---|---|
| | **ST2TSAS3** | Transverse Section; asphalt overlay; sloped slabs; 3'-0" width; Use with standard PST-2A. |

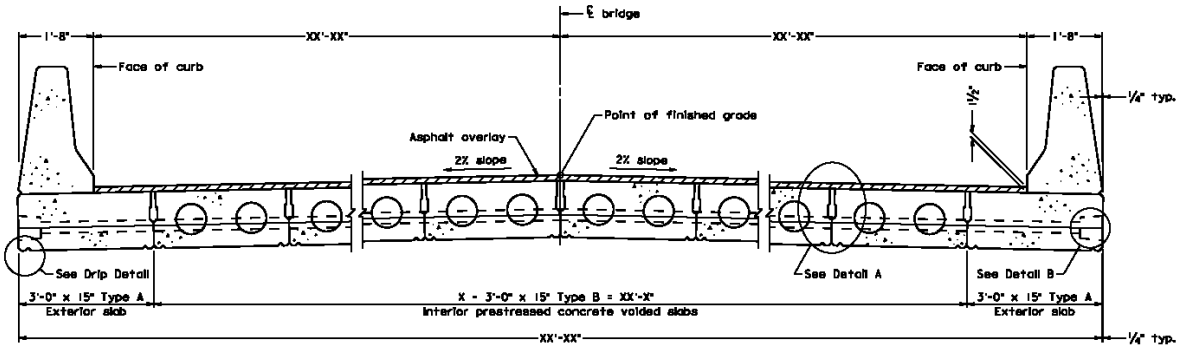


TRANSVERSE SECTION

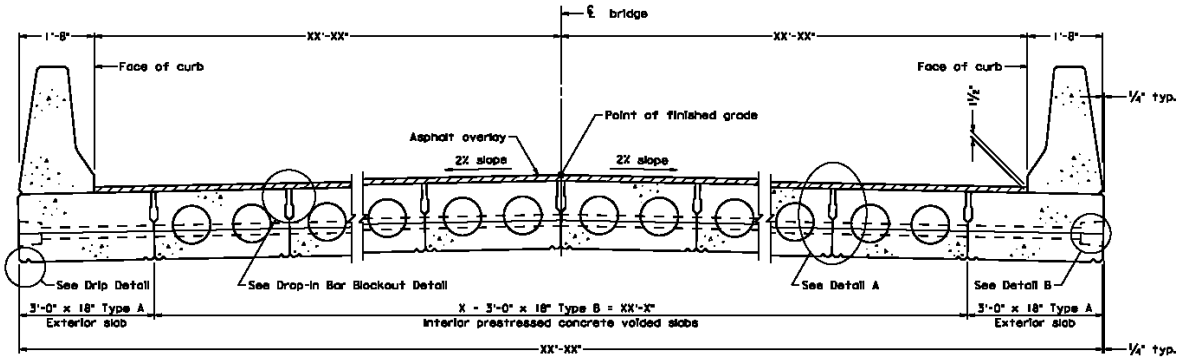


TRANSVERSE SECTION

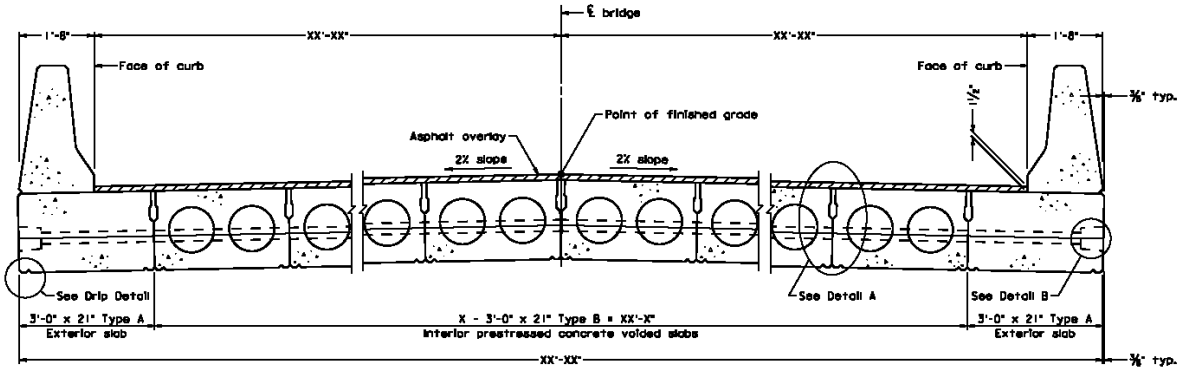


TRANSVERSE SECTION

| CELL | CELL NAME | CELL DESCRIPTION |
|---|---|---|
| | **ST2TSAS4** | Transverse Section; asphalt overlay; sloped slabs; 4'-0" width; Use with standard PST-2A. |

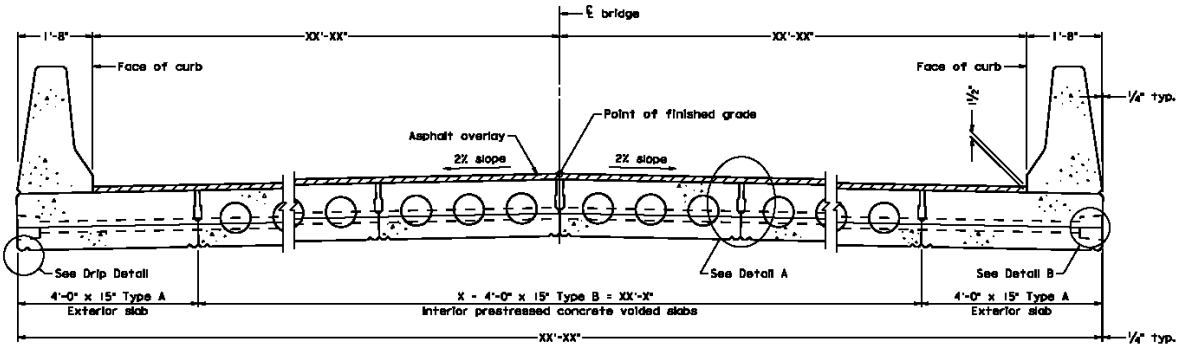


**TRANSVERSE SECTION**

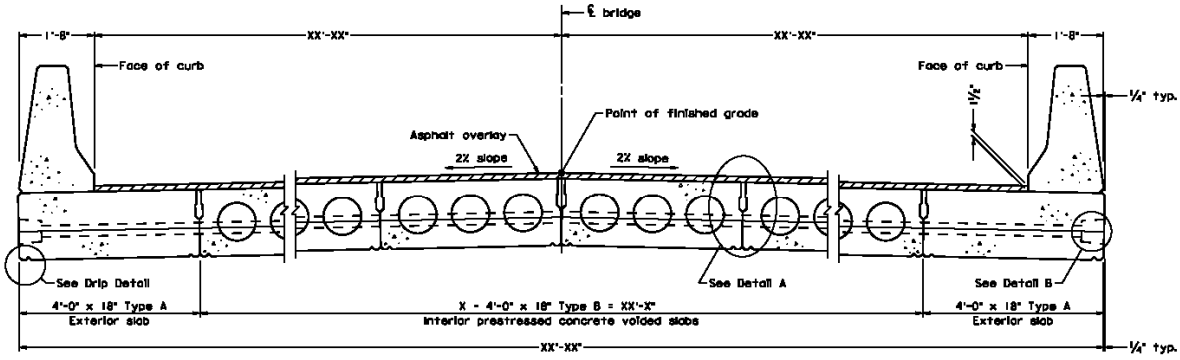


**TRANSVERSE SECTION**

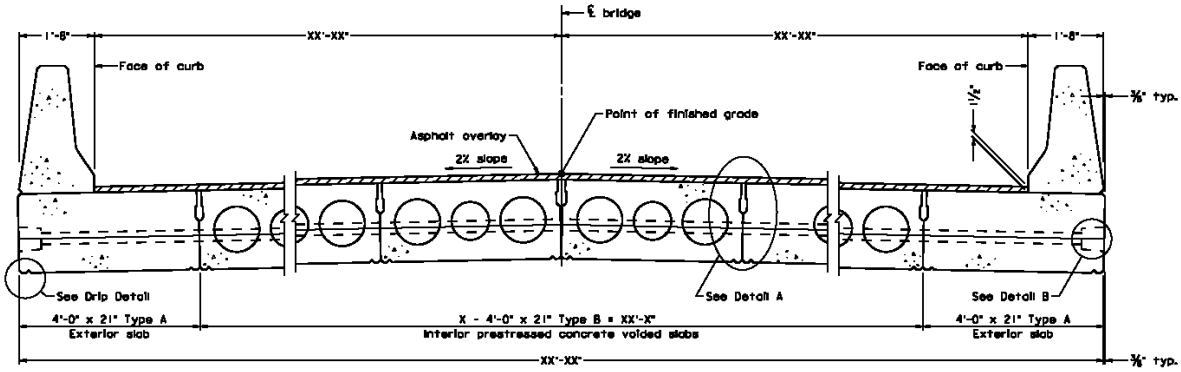


**TRANSVERSE SECTION**

| CELL | CELL NAME | CELL DESCRIPTION |
|---|---|---|
| | **ST2TSCLG** | Transverse Section; concrete overlay; level slabs; generic; Use with standard PST-2B. |

| CELL | CELL NAME | CELL DESCRIPTION |
|---|---|---|
| | **ST2TSCS3** | Transverse Section; concrete overlay; sloped slabs; 3'-0" width; Use with standard PST-2B. |

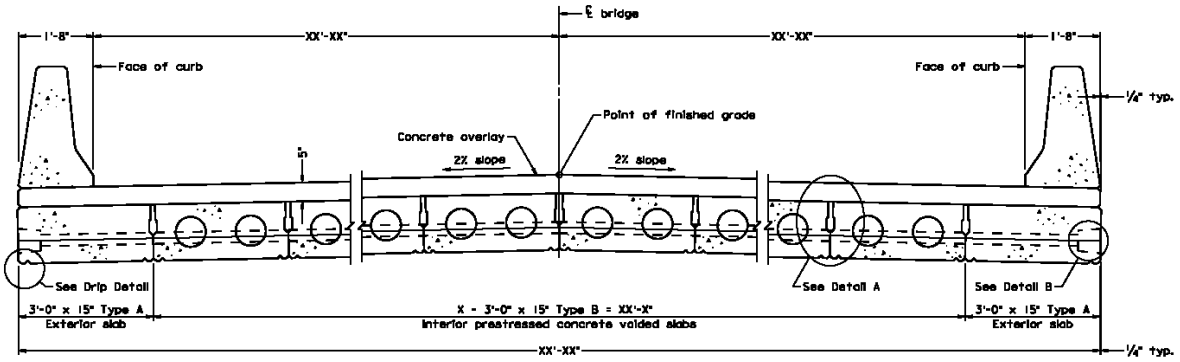


TRANSVERSE SECTION

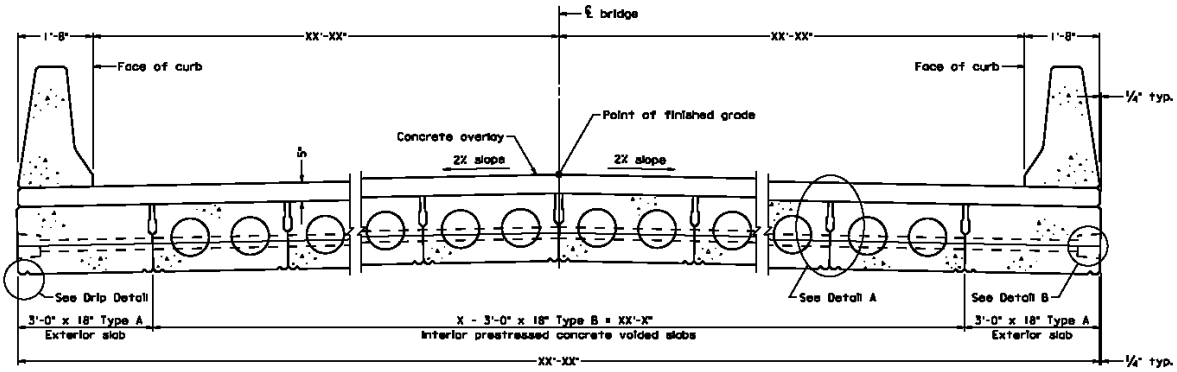


TRANSVERSE SECTION

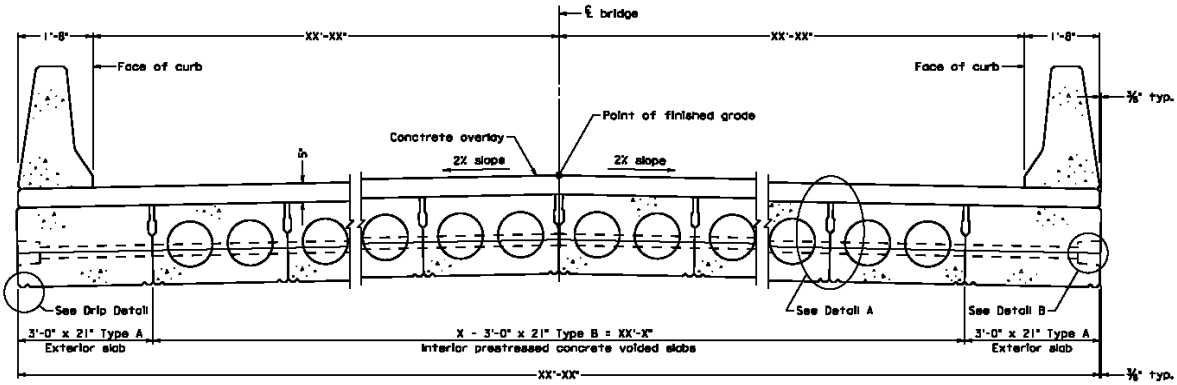


TRANSVERSE SECTION

| CELL | CELL NAME | CELL DESCRIPTION |
|---|---|---|
| | **ST2TSCS4** | Transverse Section; concrete overlay; sloped slabs; 4'-0" width; Use with standard PST-2B. |

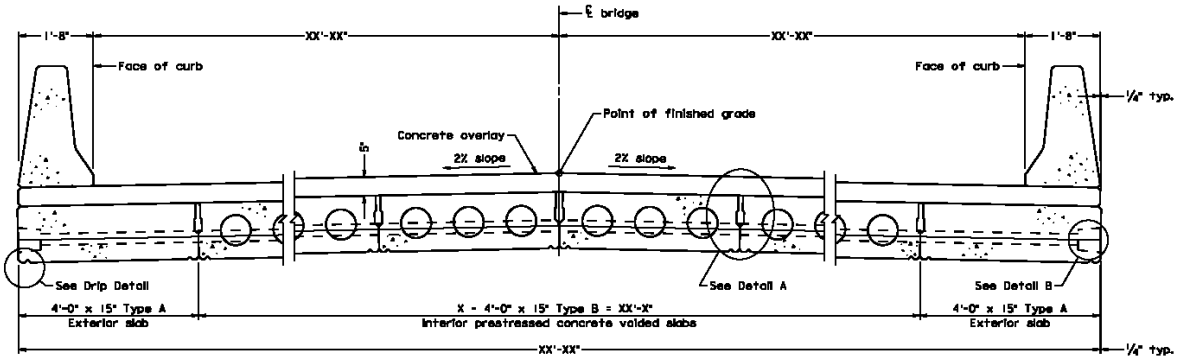


TRANSVERSE SECTION

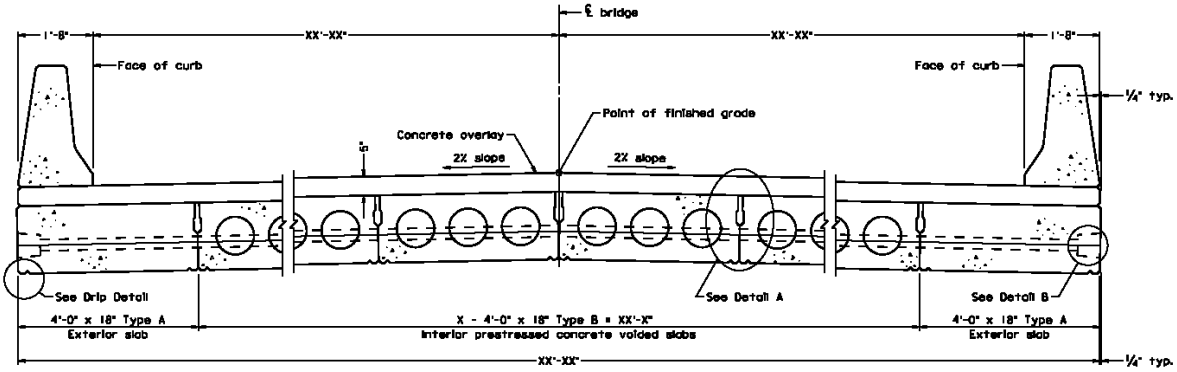


TRANSVERSE SECTION

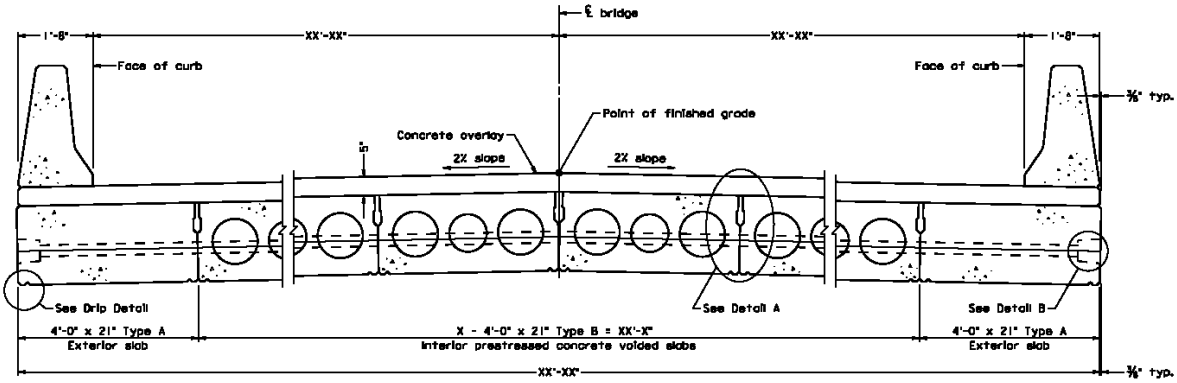


TRANSVERSE SECTION

| CELL | CELL NAME | CELL DESCRIPTION |
|---|---|---|
| | **ST2TYPS3** | Typical Sections; 3'-0" x 15" / 18" / 21"<br>Use with standard PST-2A and PST-2B. |

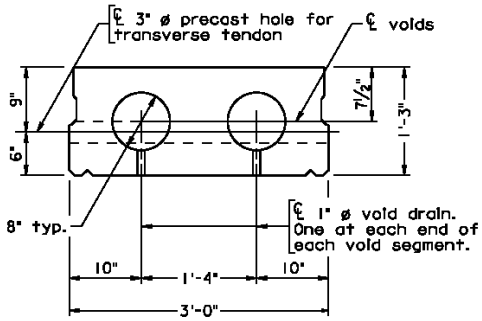


TYPICAL INTERIOR SECTION
TYPE B
Scale: 1" = 1'-0"

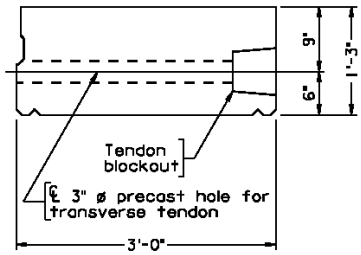


TYPICAL EXTERIOR SECTION
TYPE A
Scale: 1" = 1'-0"

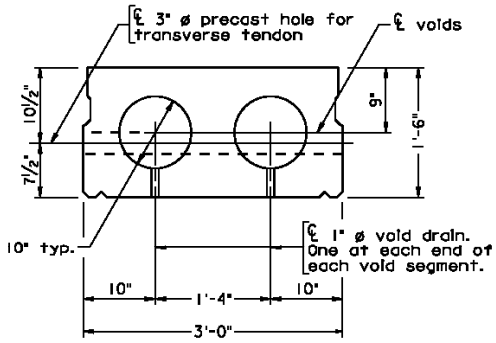


TYPICAL INTERIOR SECTION
TYPE B
Scale: 1" = 1'-0"

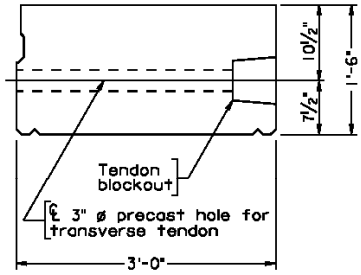


TYPICAL EXTERIOR SECTION
TYPE A
Scale: 1" = 1'-0"

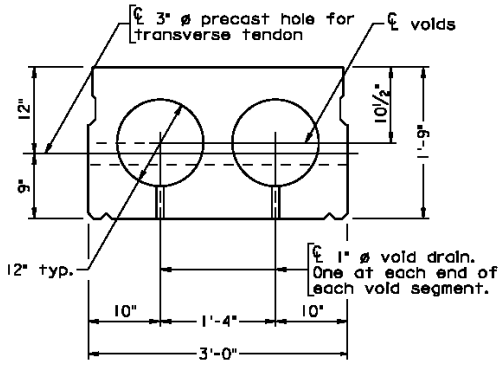


TYPICAL INTERIOR SECTION
TYPE B
Scale: 1" = 1'-0"

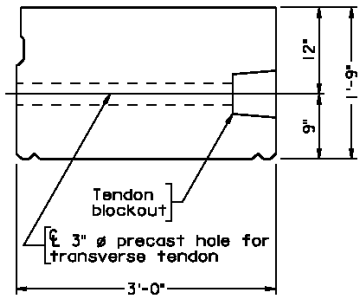


TYPICAL EXTERIOR SECTION
TYPE A
Scale: 1" = 1'-0"

| CELL | CELL NAME | CELL DESCRIPTION |
|---|---|---|
| | **ST2TYPS4** | Typical Sections; 4'-0" x 15" / 18" / 21";<br>Use with standard PST-2A and PST-2B. |

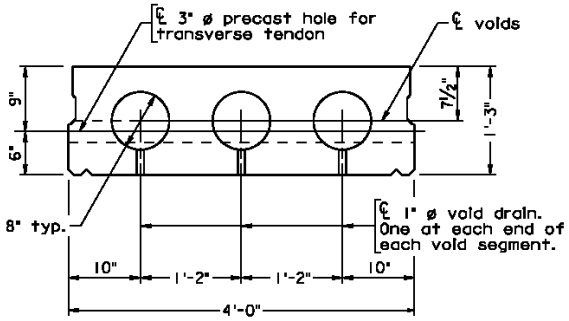


TYPICAL INTERIOR SECTION
TYPE B
Scale: 1" = 1'-0"

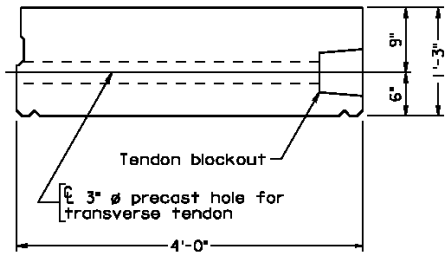


TYPICAL EXTERIOR SECTION
TYPE A
Scale: 1" = 1'-0"

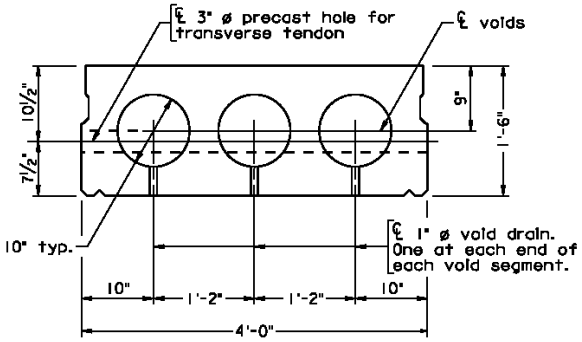


TYPICAL INTERIOR SECTION
TYPE B
Scale: 1" = 1'-0"

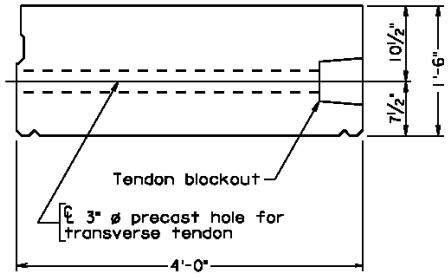


TYPICAL EXTERIOR SECTION
TYPE A
Scale: 1" = 1'-0"

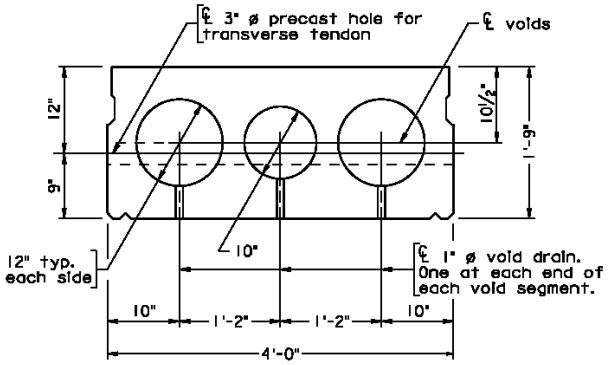


TYPICAL INTERIOR SECTION
TYPE B
Scale: 1" = 1'-0"

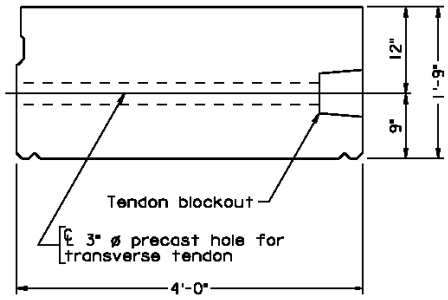


TYPICAL EXTERIOR SECTION
TYPE A
Scale: 1" = 1'-0"

| CELL | CELL NAME | CELL DESCRIPTION |
|---|---|---|
| | **ST3ANCHD** | Anchor Detail and Alternate Anchor Detail<br>Use with standard PST-3. |

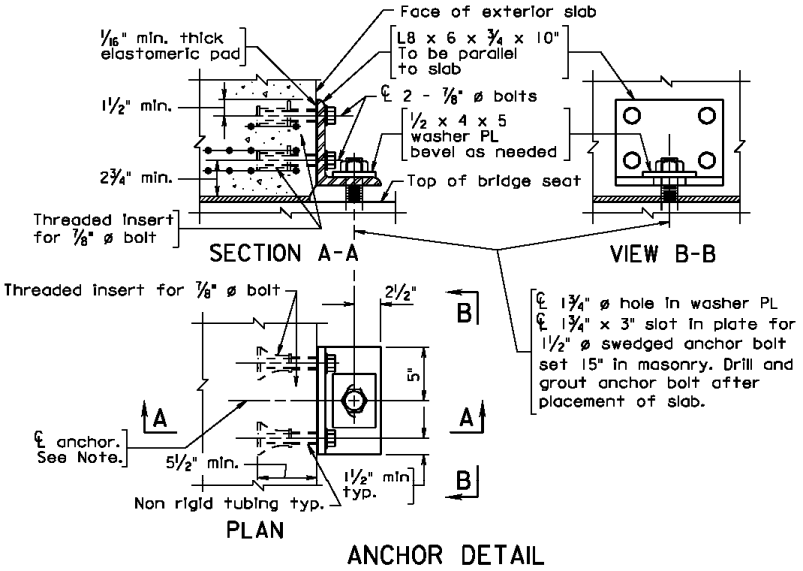


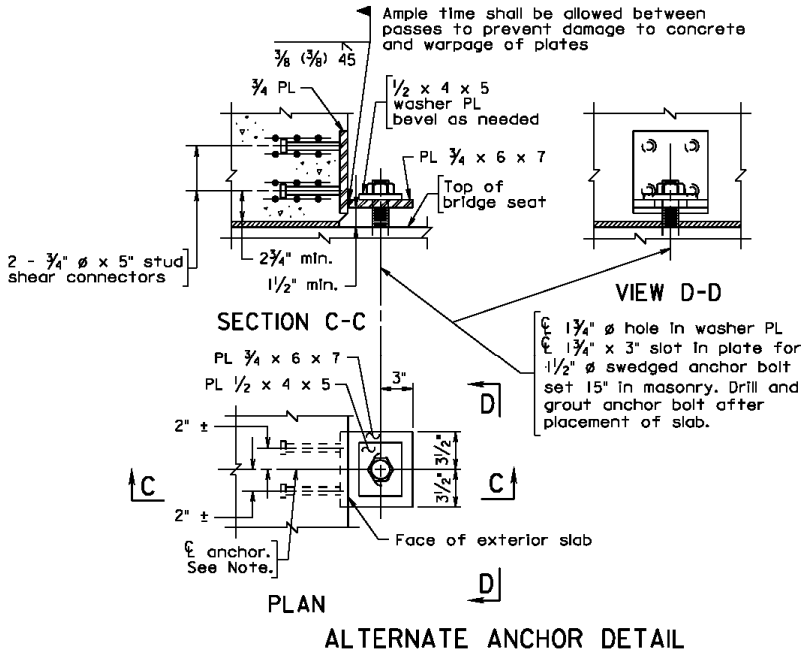


Notes:

All steel in Anchor Detail except stud shear connectors shall be ASTM A709 grade 36 and shall be galvanized.

℄ Anchor may be shifted as approved by the Engineer to provide minimum concrete cover of 2" for threaded inserts or stud shear connectors.

Threaded inserts when embedded as shown shall develop full strength strength of 7/8" ø threaded bolt.

| CELL | CELL NAME | CELL DESCRIPTION |
|---|---|---|
| | **ST3ELEV0** | Elevation; 0° skew; 15” / 18” / 21”<br>Use with standard PST-3. |

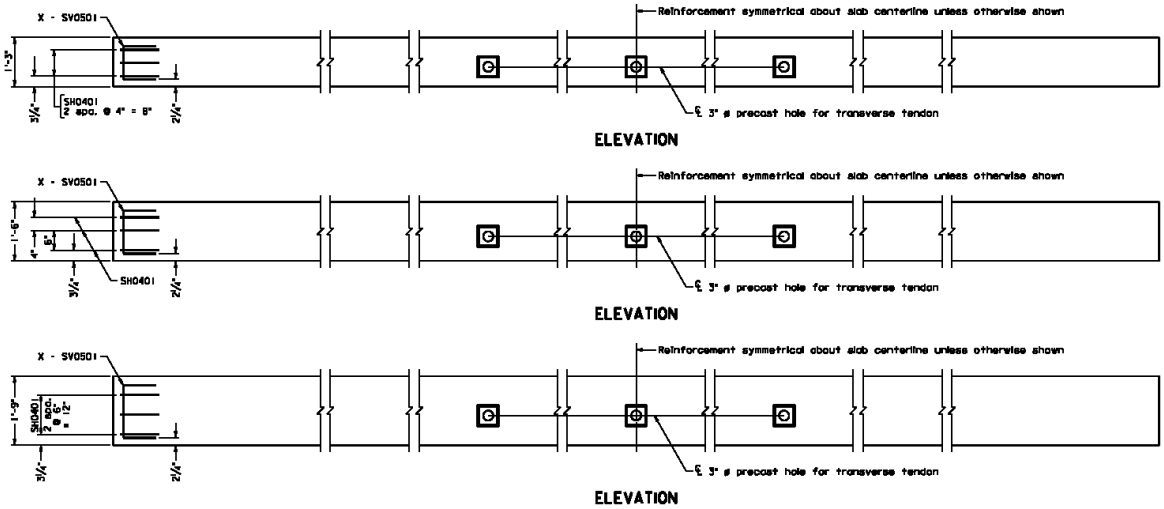


| | | |
|---|---|---|
| | **ST3PLANB** | Plan; 0° skew; both 3’-0” and 4’-0” widths<br>Use with standard PST-3. |

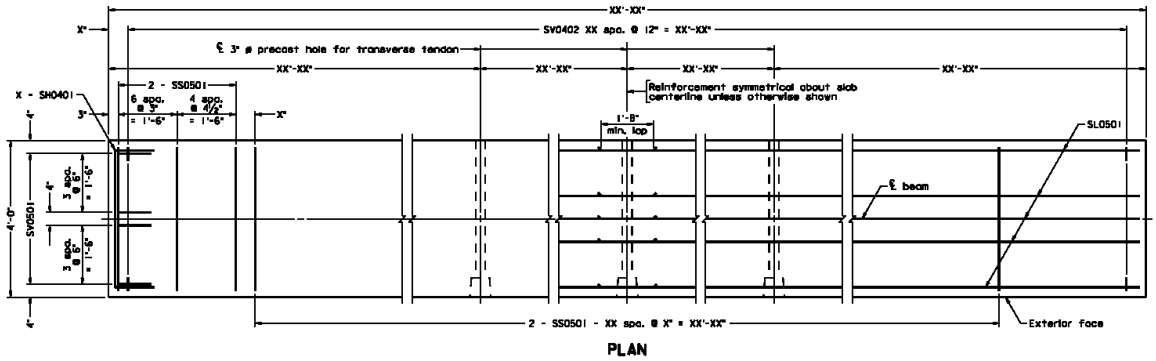


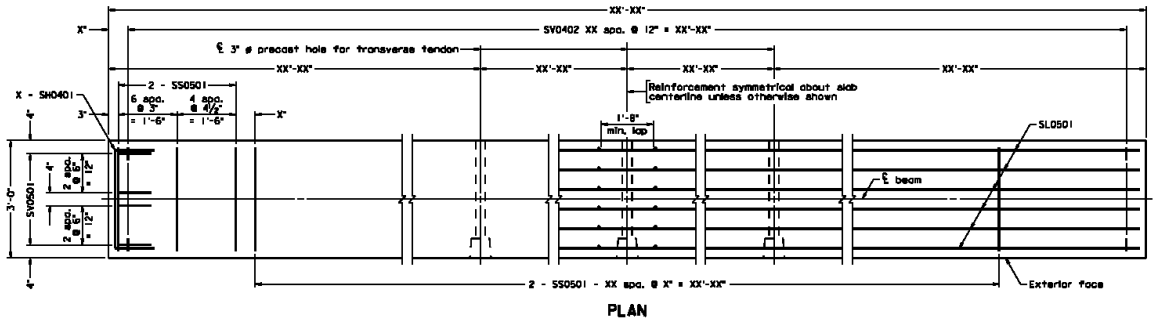

| CELL | CELL NAME | CELL DESCRIPTION |
|---|---|---|
| | **ST3SPRD3** | Strand Pattern; Reinforcing Details; 3'-0" width<br>Use with standard PST-3. |

| CELL | CELL NAME | CELL DESCRIPTION |
|---|---|---|
| | **ST3SPRD4** | Strand Pattern; Reinforcing Details; 4’-0” width<br>Use with standard PST-3. |

| CELL | CELL NAME | CELL DESCRIPTION |
|---|---|---|
| | **ST34GRAD** | Slabs on Gradient in Excess of 1 %<br>Use with standards PST-3 and -4. |

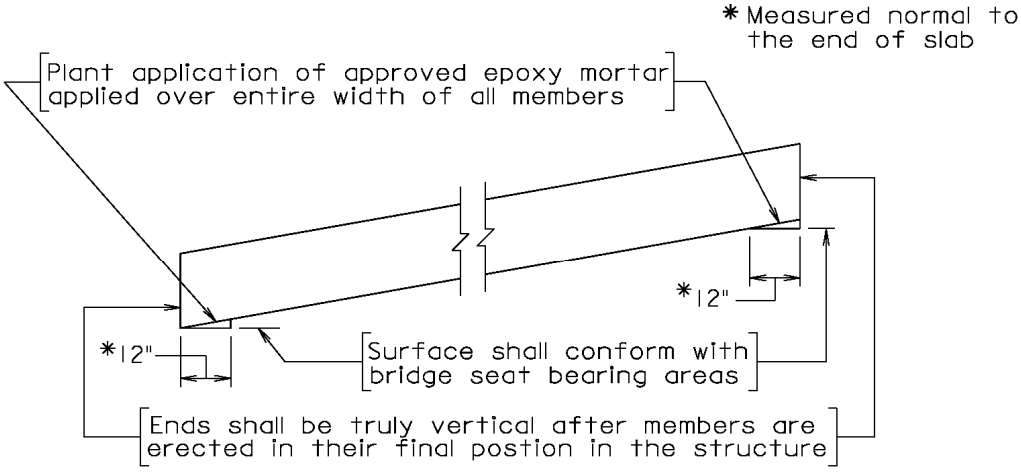


SLABS ON GRADIENT IN EXCESS OF 1%

| CELL | CELL NAME | CELL DESCRIPTION |
|---|---|---|
| | **ST4ELEV0** | Elevation; 0° skew; 15” / 18” / 21”<br>Use with standard PST-4. |

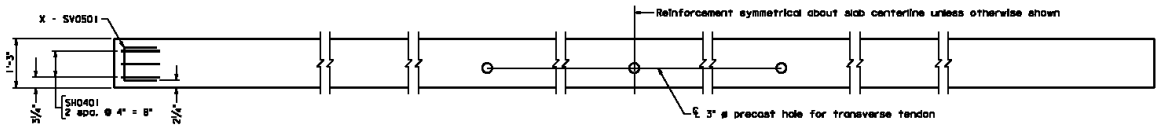


ELEVATION

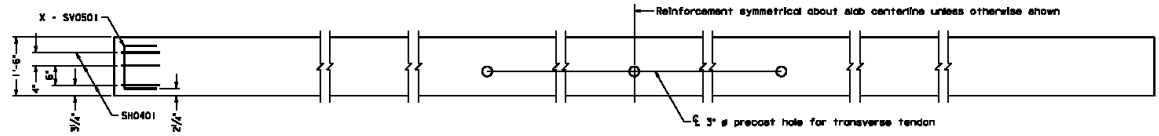


ELEVATION

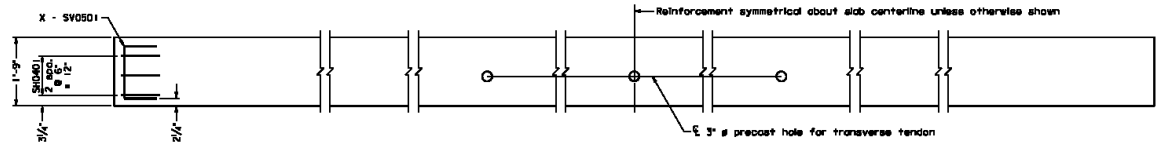


ELEVATION

| | | |
|---|---|---|
| | **ST4PLANB** | Plan; 0° skew; both 3’-0” and 4’-0” widths<br>Use with standard PST-4. |

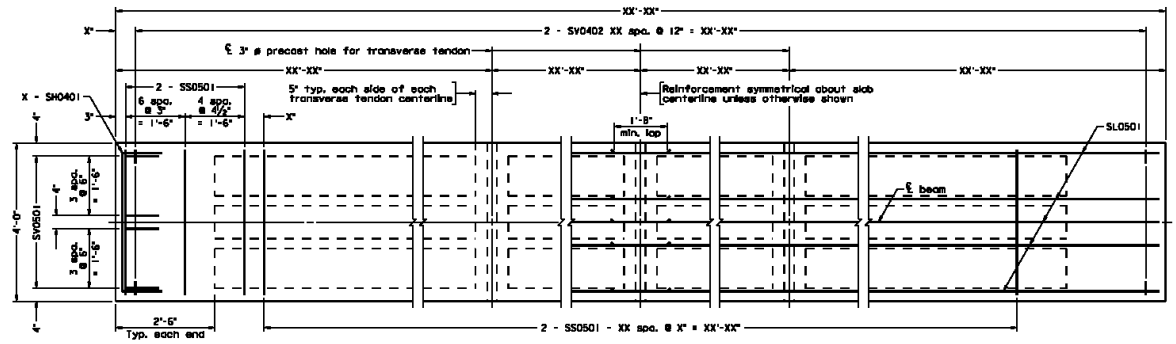


PLAN

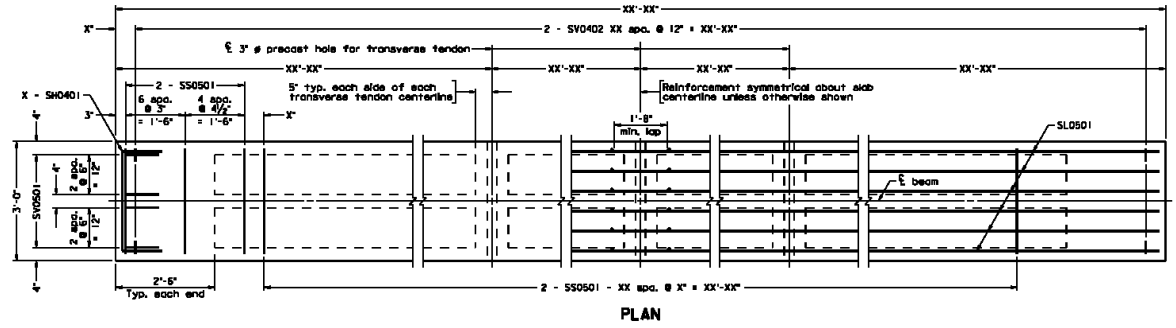


PLAN

| CELL | CELL NAME | CELL DESCRIPTION |
|---|---|---|
| | **ST4SPRD3** | Strand Pattern; Reinforcing Details; 3'-0" width<br>Use with standard PST-4. |

| CELL | CELL NAME | CELL DESCRIPTION |
|---|---|---|
| | **ST4SPRD4** | Strand Pattern; Reinforcing Details; 4'-0: width<br>Use with standard PST-4. |

| CELL | CELL NAME | CELL DESCRIPTION |
|---|---|---|
| | **ST5STRAI** | Section Thru Rail<br>Use with standard PST-5. |

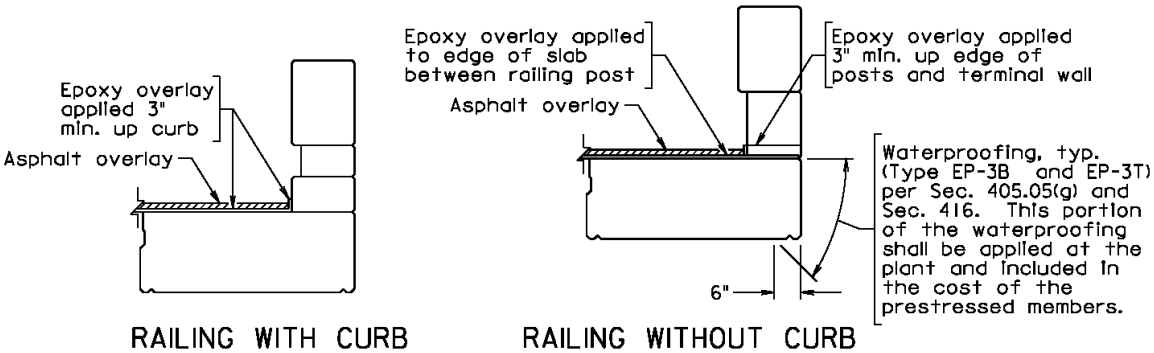


RAILING WITH CURB RAILING WITHOUT CURB

SECTION THRU RAIL

Scale: 1/2" = 1'-0"
(for asphalt overlay)

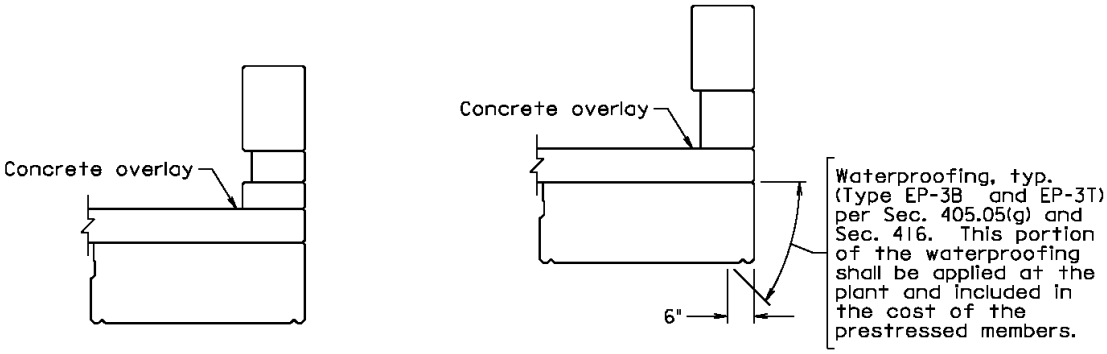


RAILING WITH CURB RAILING WITHOUT CURB

SECTION THRU RAIL

Scale: 1/2" = 1'-0"
(for concrete overlay)

| CELL | CELL NAME | CELL DESCRIPTION |
|---|---|---|
| | **SV1E0S3E** | Erection Diagram; 0° skew; 3'-0"; Edge on CL<br>Use with standard PSV-1. |

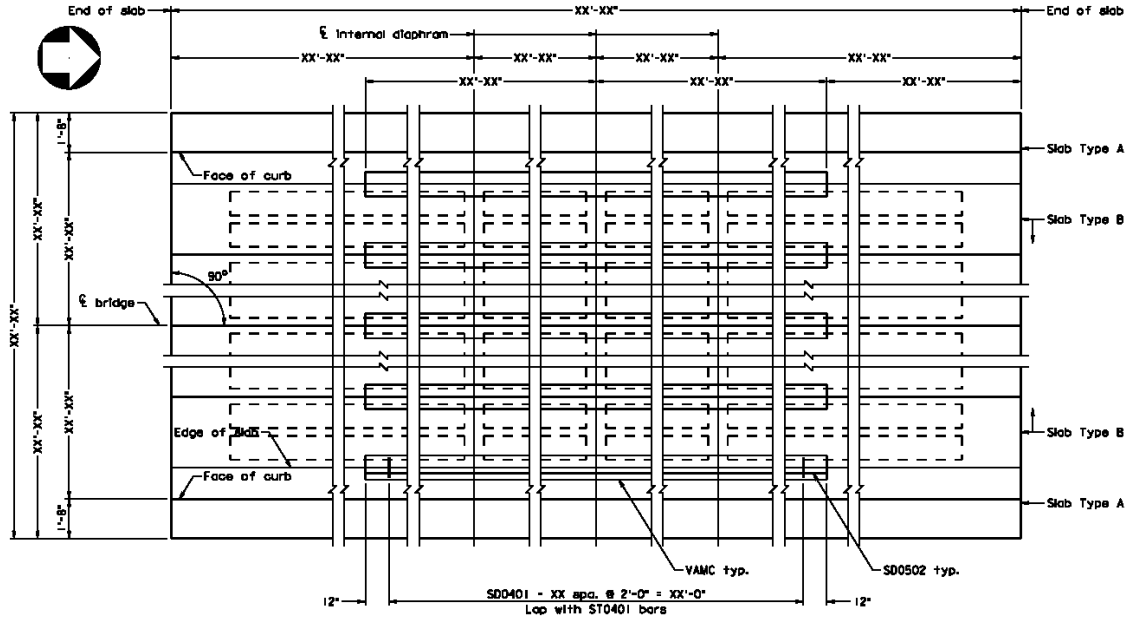


**ERECTION DIAGRAM**

Shear key limits not shown for clarity

| | | |
|---|---|---|
| | **SV1E0S3O** | Erection Diagram; 0° skew; 3'-0"; CL on slab<br>Use with standard PSV-1. |

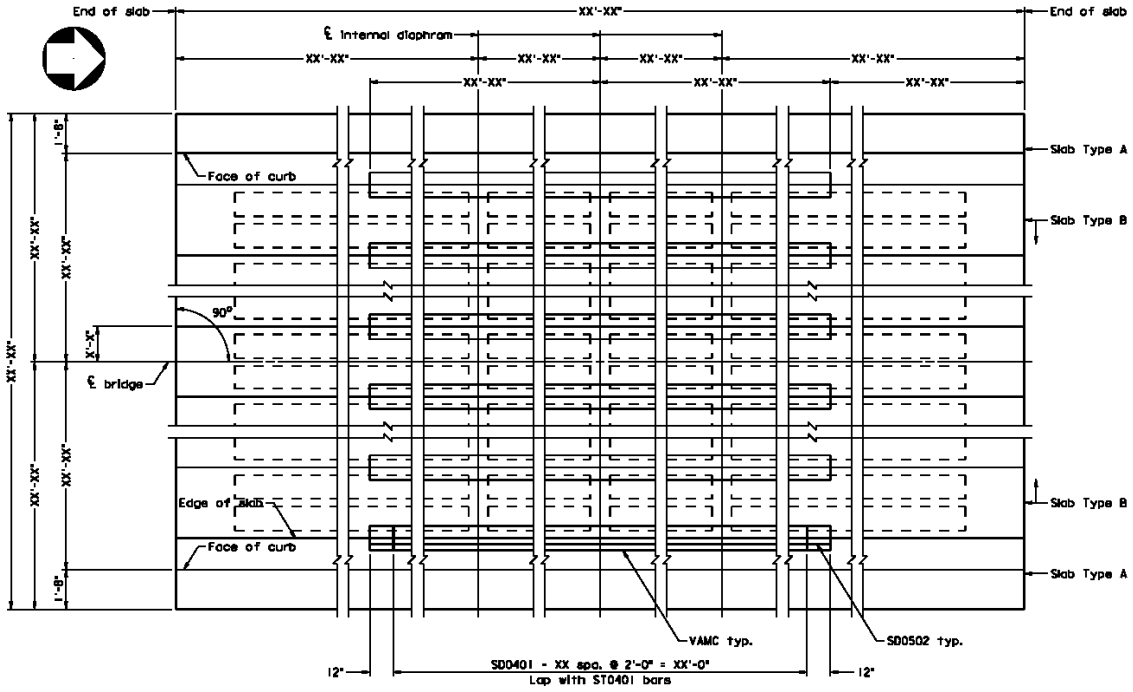


**ERECTION DIAGRAM**

Shear key limits not shown for clarity

| CELL | CELL NAME | CELL DESCRIPTION |
|---|---|---|
| | **SV1E0S4E** | Erection Diagram; 0° skew; 4'-0"; Edge on CL<br>Use with standard PSV-1. |

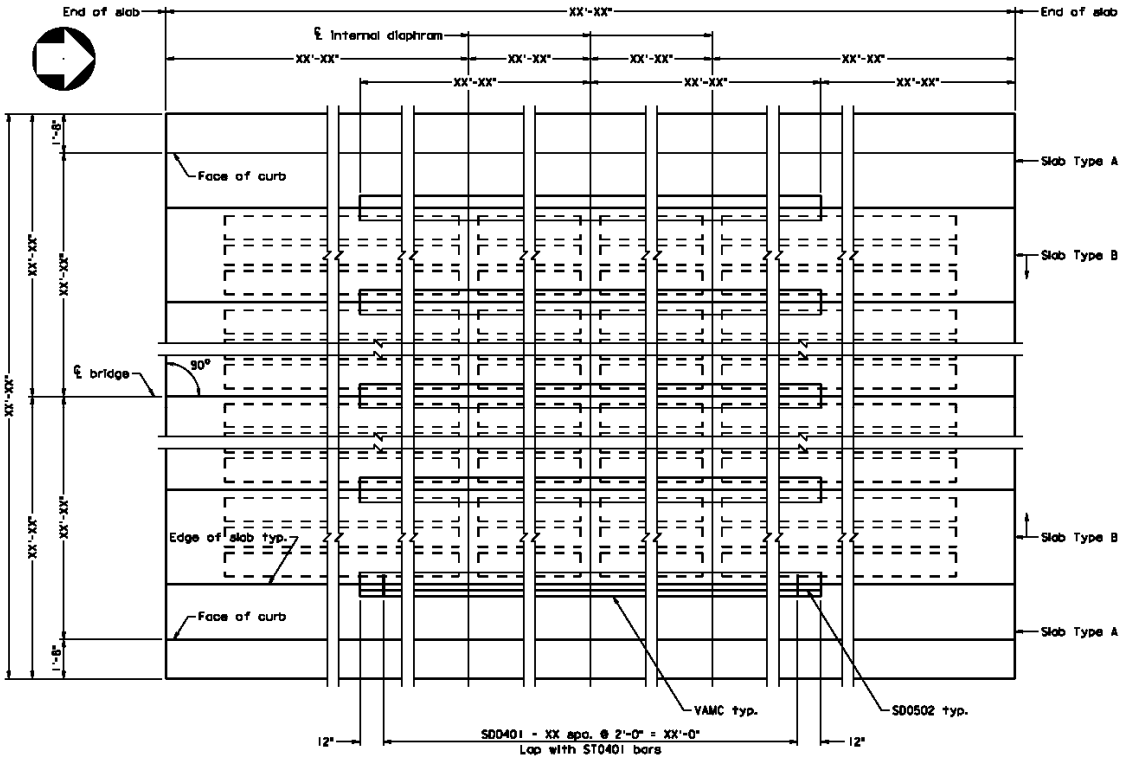


**ERECTION DIAGRAM**

Shear key limits not shown for clarity

| CELL | CELL NAME | CELL DESCRIPTION |
|---|---|---|
| | **SV1E0S4O** | Erection Diagram; 0° skew; 4'-0"; Edge on CL<br>Use with standard PSV-1. |

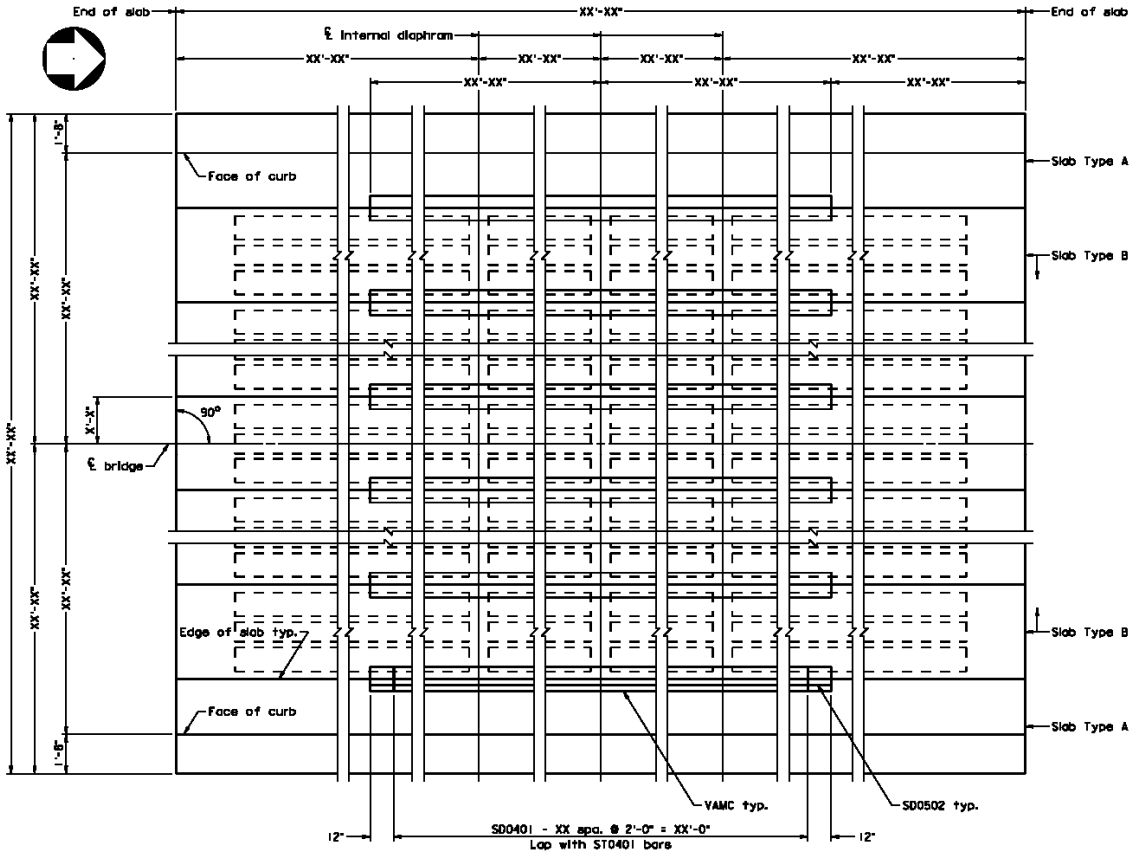


**ERECTION DIAGRAM**

Shear key limits not shown for clarity

| | | |
|---|---|---|
| | **SV2DETAA** | Detail A, 15" / 18" / 21"<br>Use with standard PSV-2A and PSV-2B. |

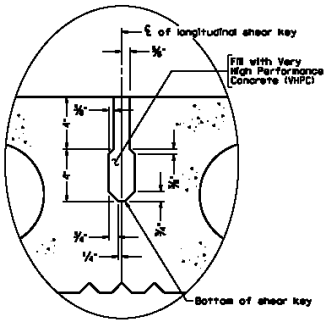


**DETAIL A**

Overlay not shown
(Shown for 15" prestressed voided slab)

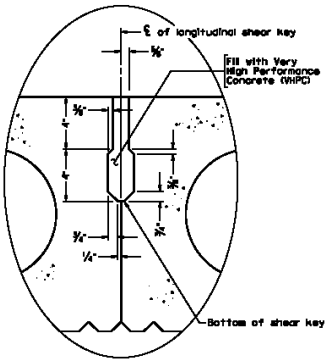


**DETAIL A**

Overlay not shown
(Shown for 18" prestressed voided slab)

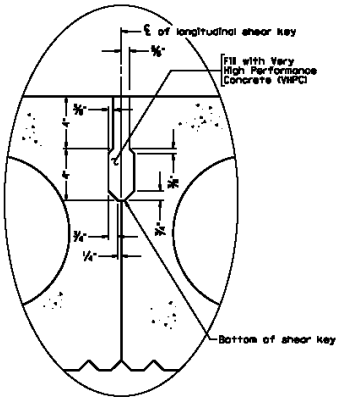


**DETAIL A**

Overlay not shown
(Shown for 21" prestressed voided slab)

| CELL | CELL NAME | CELL DESCRIPTION |
|---|---|---|
| | **SV2TSALG** | Transverse Section, asphalt overlay, level slabs, generic; Use with standard PSV-2A. |

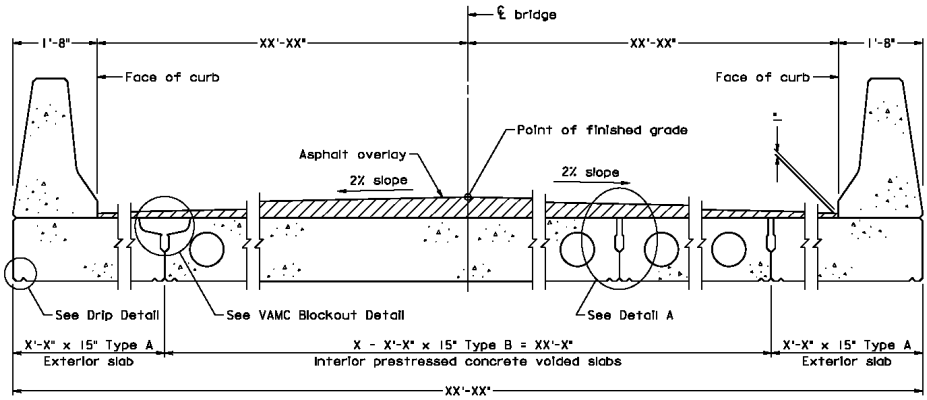


TRANSVERSE SECTION

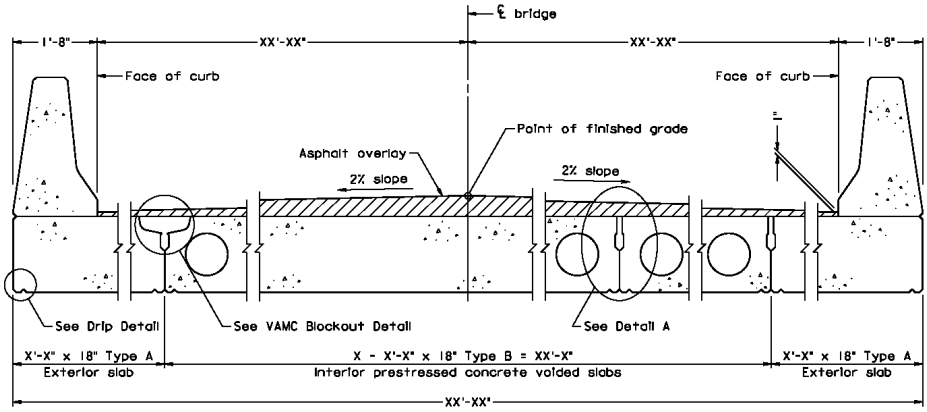


TRANSVERSE SECTION

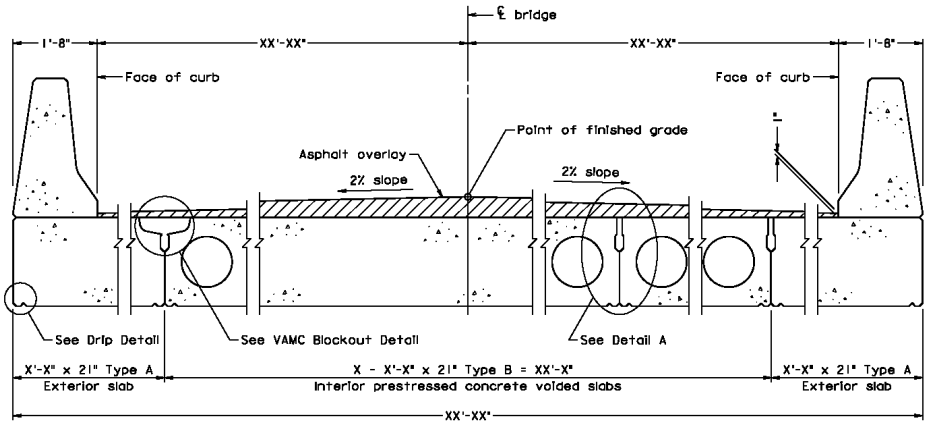


TRANSVERSE SECTION

| CELL | CELL NAME | CELL DESCRIPTION |
|---|---|---|
| | **SV2TSAS3** | Transverse Section; asphalt overlay; sloped slabs; 3'-0" width; Use with standard PSV-2A. |

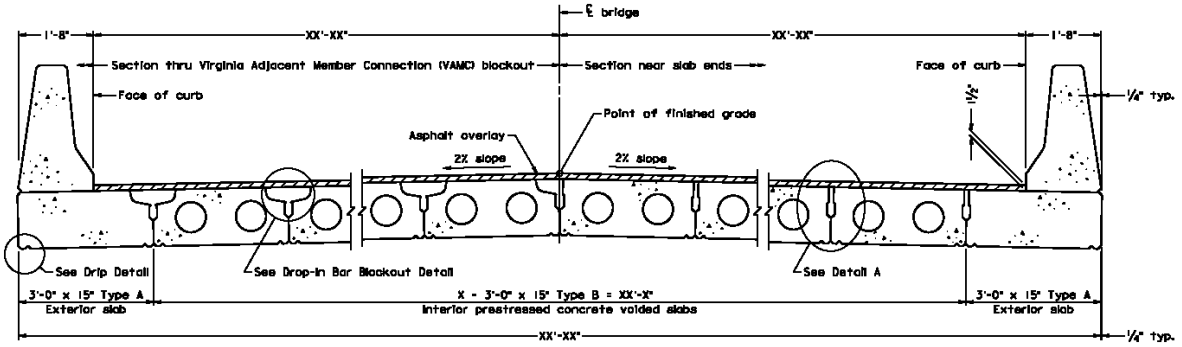


TRANSVERSE SECTION

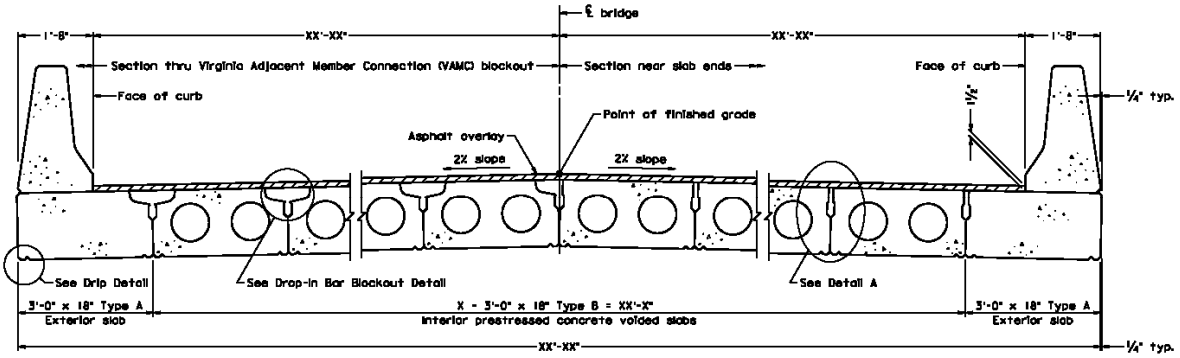


TRANSVERSE SECTION

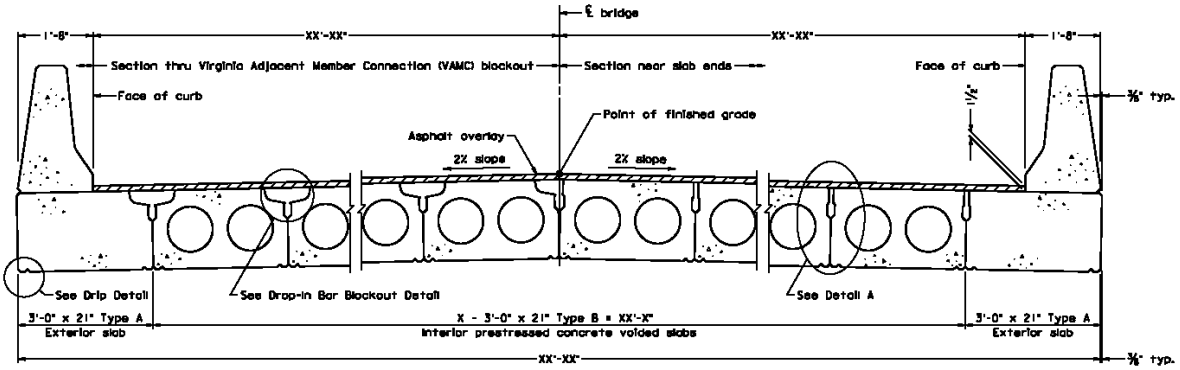


TRANSVERSE SECTION

| CELL | CELL NAME | CELL DESCRIPTION |
|---|---|---|
| | **SV2TSAS4** | Transverse Section; asphalt overlay; sloped slabs; 4'-0" width; Use with standard PSV-2A. |

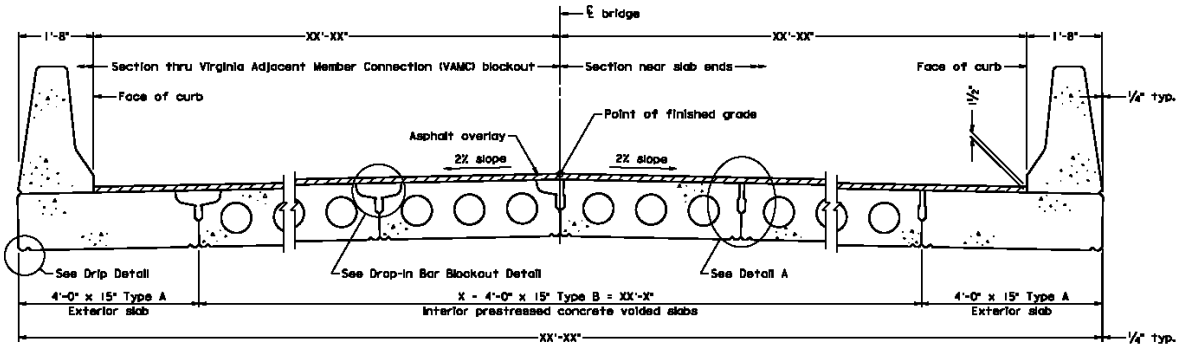


**TRANSVERSE SECTION**

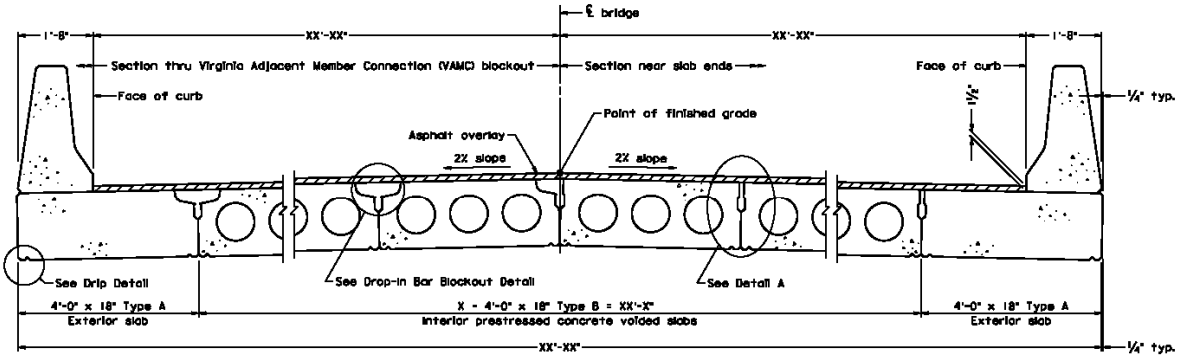


**TRANSVERSE SECTION**

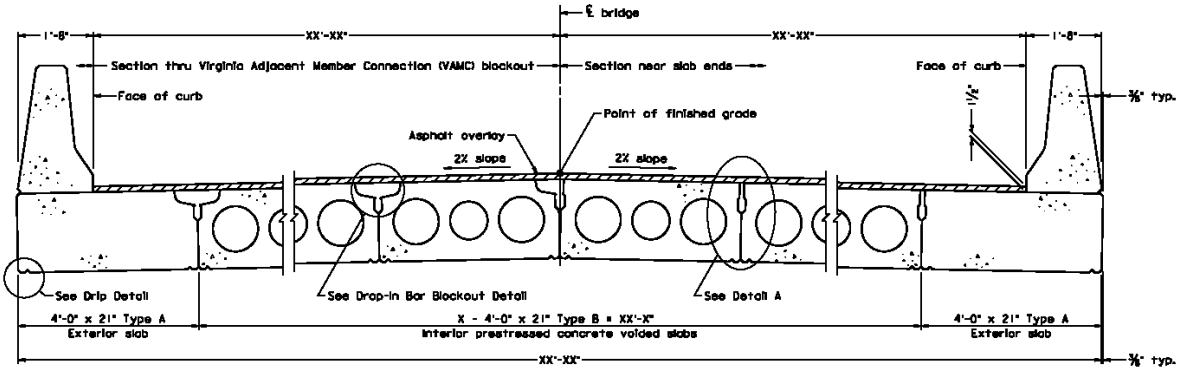


**TRANSVERSE SECTION**

| CELL | CELL NAME | CELL DESCRIPTION |
|---|---|---|
| | **SV2TSCLG** | Transverse Section; concrete overlay; level slabs; generic; Use with standard PSV-2B. |

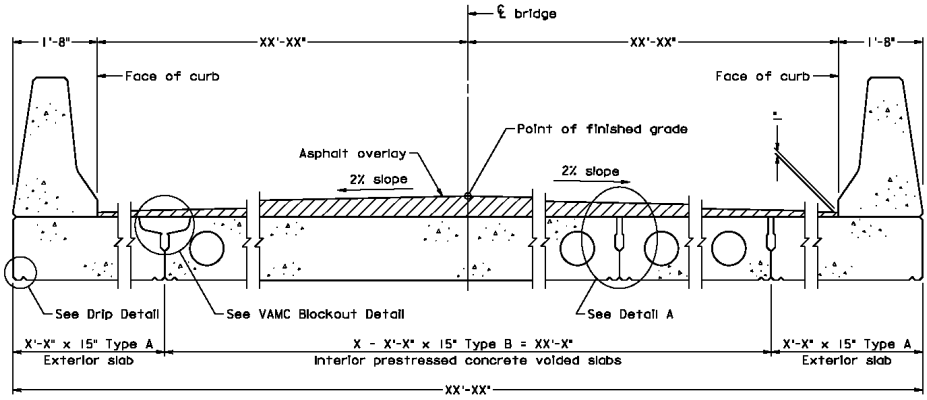


TRANSVERSE SECTION

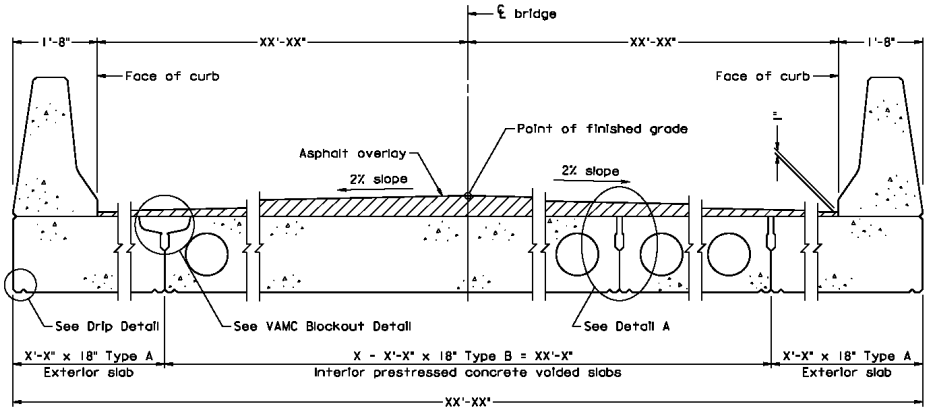


TRANSVERSE SECTION

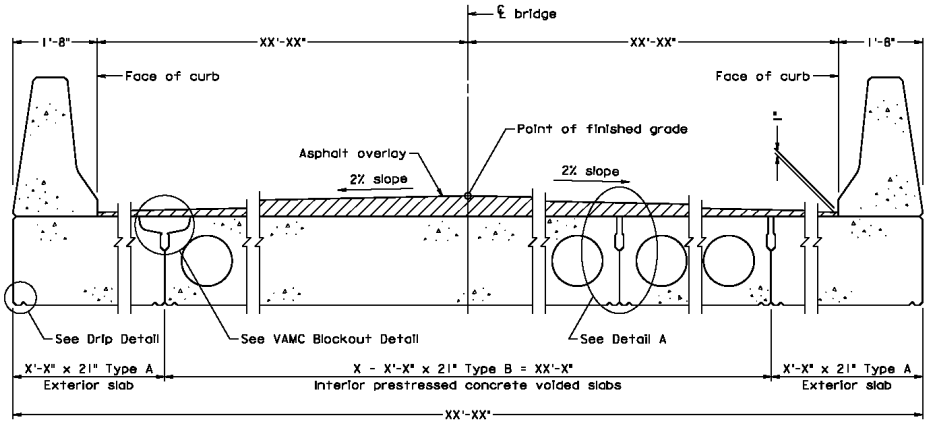


TRANSVERSE SECTION

| CELL | CELL NAME | CELL DESCRIPTION |
|---|---|---|
| | **SV2TSCS3** | Transverse Section; concrete overlay; sloped slabs; 3'-0" width; Use with standard PSV-2B. |

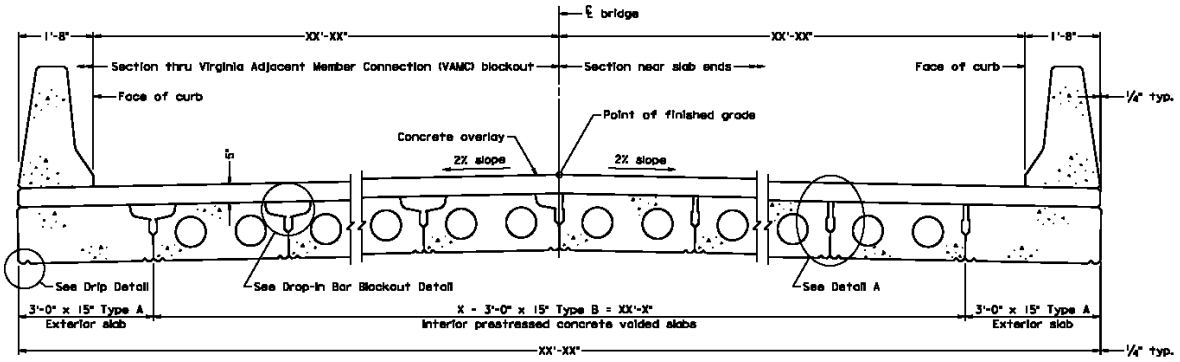


TRANSVERSE SECTION

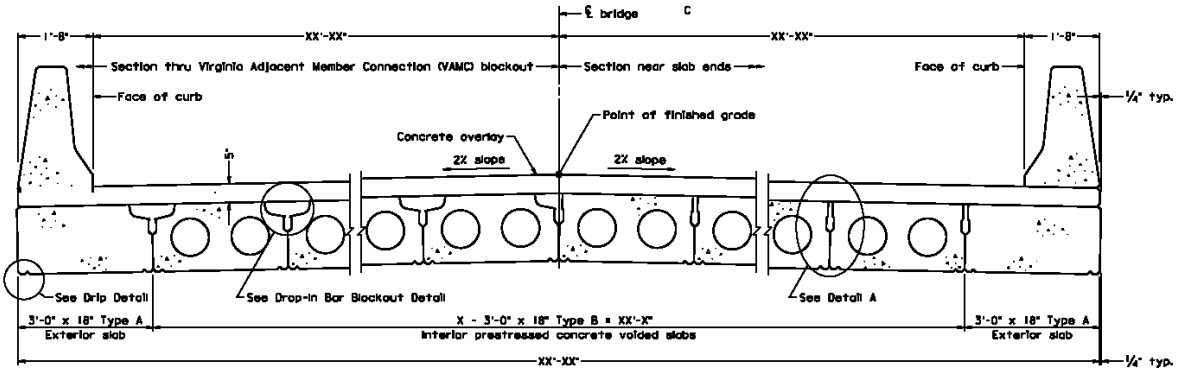


TRANSVERSE SECTION

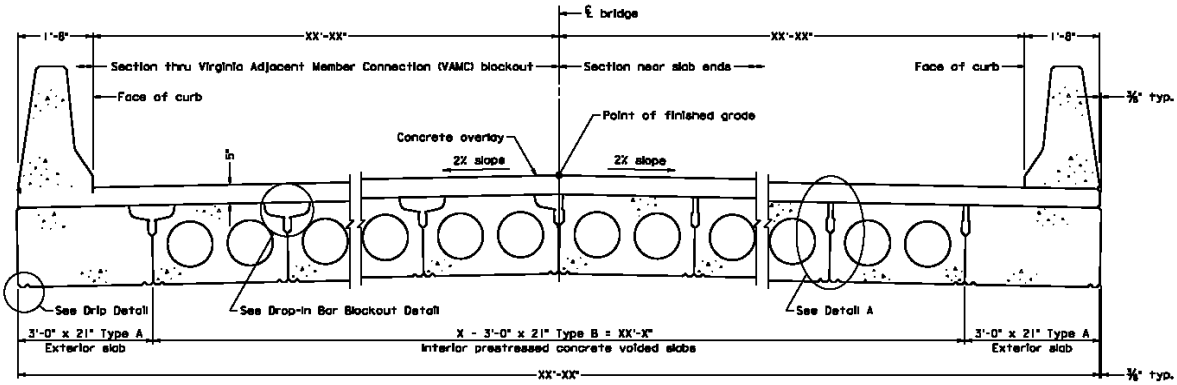


TRANSVERSE SECTION

| CELL | CELL NAME | CELL DESCRIPTION |
|---|---|---|
| | **SV2TSCS4** | Transverse Section; concrete overlay; sloped slabs; 4'-0" width; Use with standard PSV-2B. |

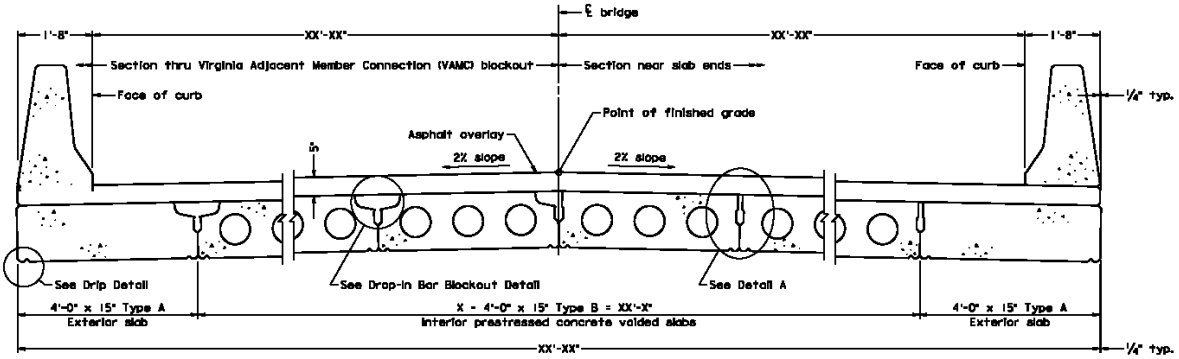


TRANSVERSE SECTION

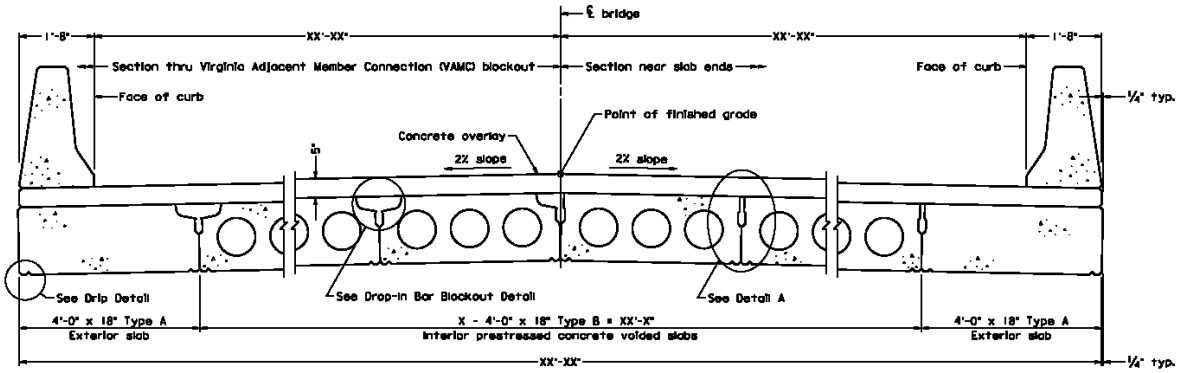


TRANSVERSE SECTION

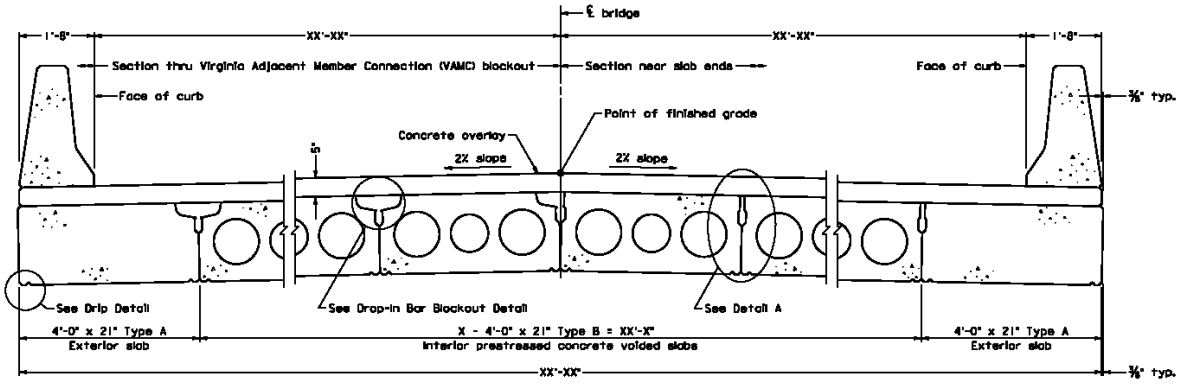


TRANSVERSE SECTION

| CELL | CELL NAME | CELL DESCRIPTION |
|---|---|---|
| | **SV2TYPS3** | Typical Sections; 3'-0" x 15" / 18" / 21"<br>Use with standard PSV-2A and PSV-2B. |

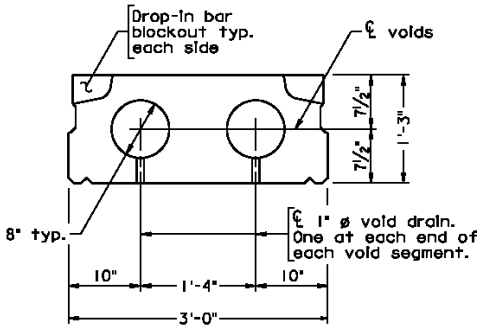


TYPICAL INTERIOR SECTION
TYPE B
Scale: 1" = 1'-0"

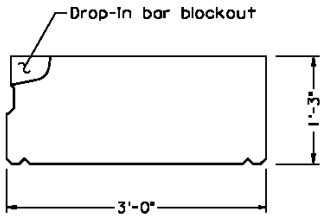


TYPICAL EXTERIOR SECTION
TYPE A
Scale: 1" = 1'-0"

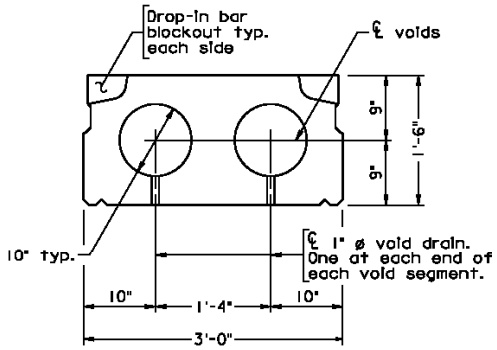


TYPICAL INTERIOR SECTION
TYPE B
Scale: 1" = 1'-0"

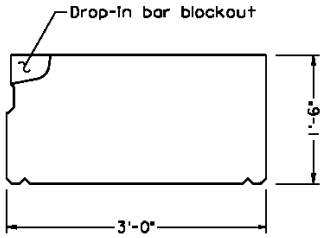


TYPICAL EXTERIOR SECTION
TYPE A
Scale: 1" = 1'-0"

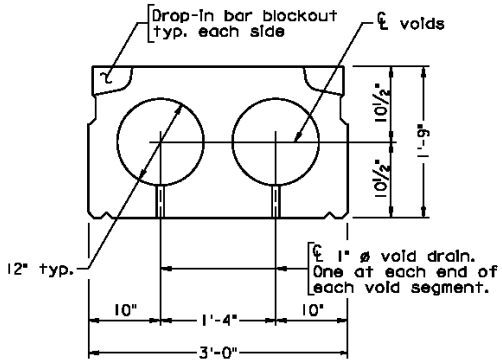


TYPICAL INTERIOR SECTION
TYPE B
Scale: 1" = 1'-0"

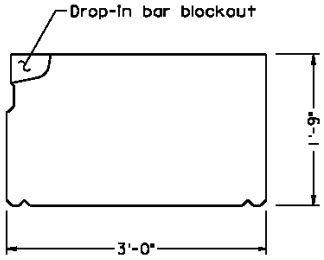


TYPICAL EXTERIOR SECTION
TYPE A
Scale: 1" = 1'-0"

| CELL | CELL NAME | CELL DESCRIPTION |
|---|---|---|
| | **SV2TYPS4** | Typical Sections; 4'-0" x 15" / 18" / 21";<br>Use with standard PSV-2A and PSV-2B. |

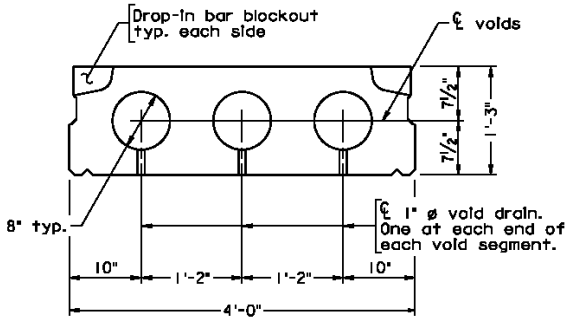


TYPICAL INTERIOR SECTION
TYPE B
Scale: 1" = 1'-0"

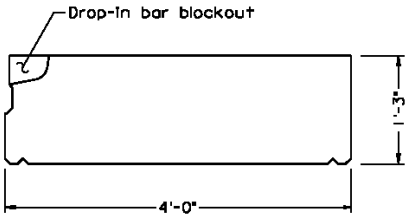


TYPICAL EXTERIOR SECTION
TYPE A
Scale: 1" = 1'-0"

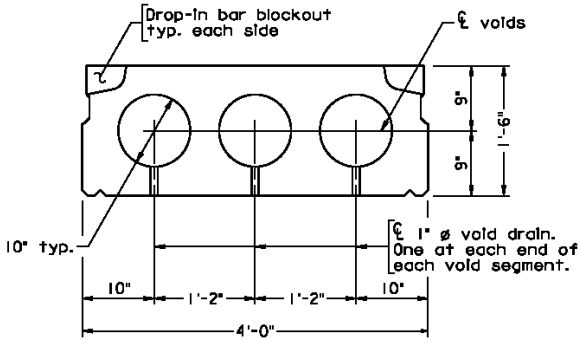


TYPICAL INTERIOR SECTION
TYPE B
Scale: 1" = 1'-0"

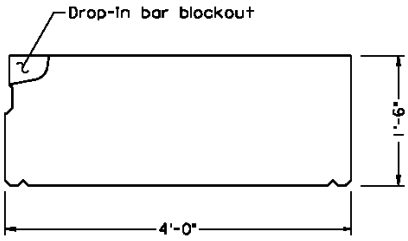


TYPICAL EXTERIOR SECTION
TYPE A
Scale: 1" = 1'-0"

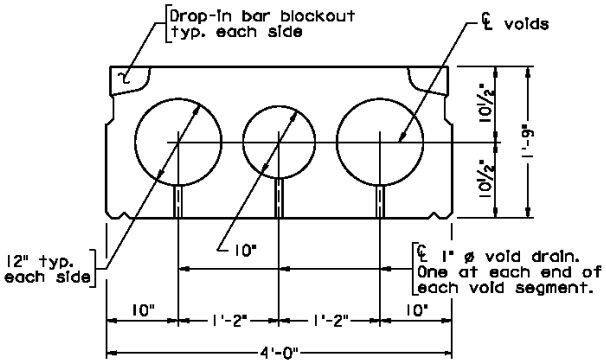


TYPICAL INTERIOR SECTION
TYPE B
Scale: 1" = 1'-0"

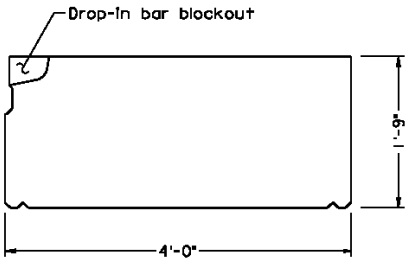


TYPICAL EXTERIOR SECTION
TYPE A
Scale: 1" = 1'-0"

| CELL | CELL NAME | CELL DESCRIPTION |
|---|---|---|
| | **SV3ANCHD** | Anchor Detail and Alternate Anchor Detail<br>Use with standard PSV-3. |

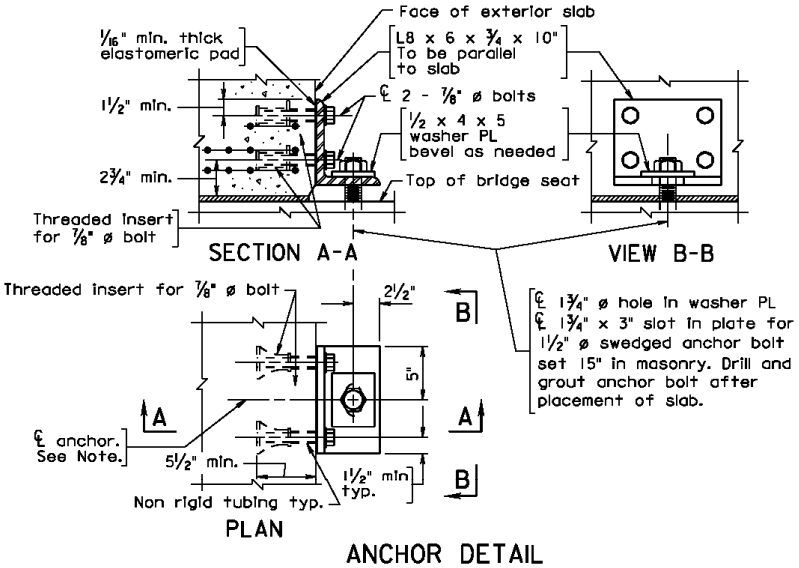


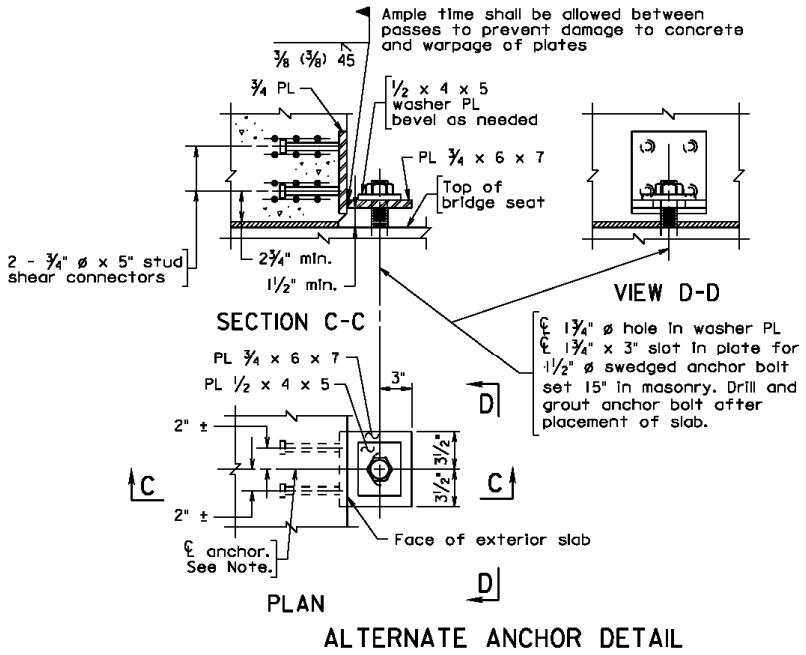


Notes:

All steel in Anchor Detail except stud shear connectors shall be ASTM A709 grade 36 and shall be galvanized.

℄ Anchor may be shifted as approved by the Engineer to provide minimum concrete cover of 2" for threaded inserts or stud shear connectors.

Threaded inserts when embedded as shown shall develop full strength strength of 7/8" ø threaded bolt.

| CELL | CELL NAME | CELL DESCRIPTION |
|---|---|---|
| | **SV3ELEV0** | Elevation; 0° skew; 15” / 18” / 21”<br>Use with standard PSV-3. |

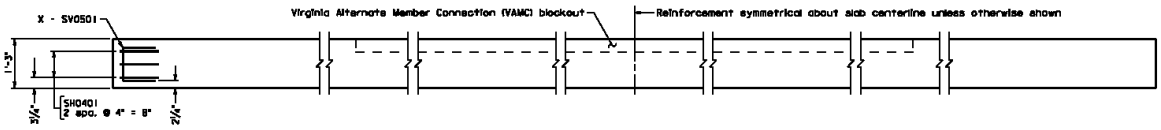


ELEVATION

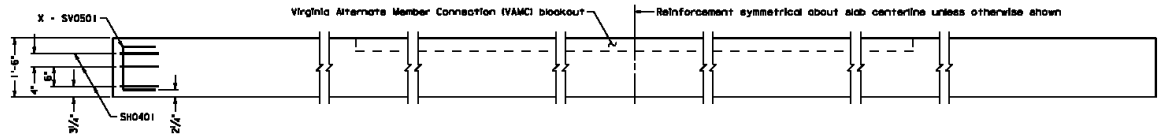


ELEVATION

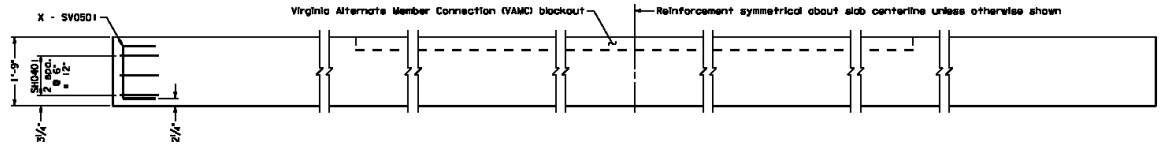


ELEVATION

| | | |
|---|---|---|
| | **SV3PLANB** | Plan; 0° skew; both 3’-0” and 4’-0” widths<br>Use with standard PSV-3. |

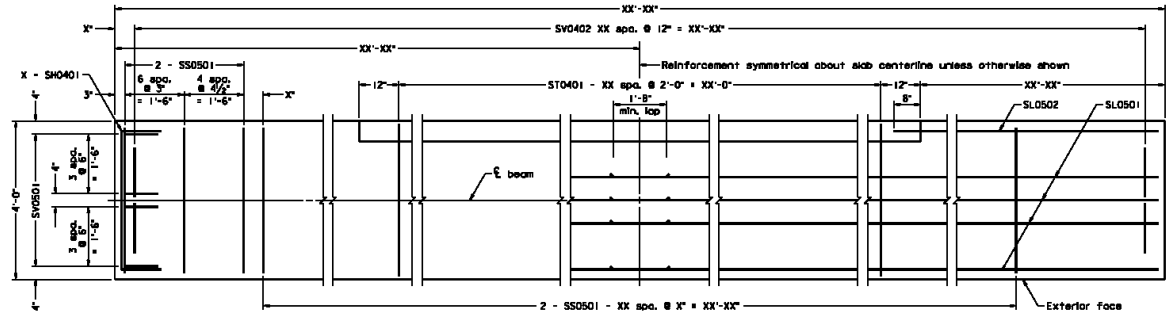


PLAN

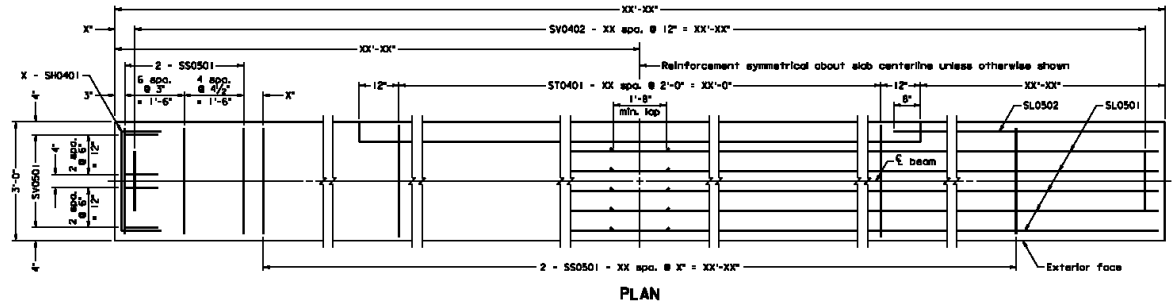


PLAN

| CELL | CELL NAME | CELL DESCRIPTION |
|---|---|---|
| | **SV3SPRD3** | Strand Pattern; Reinforcing Details; 3'-0" width<br>Use with standard PSV-3. |

| CELL | CELL NAME | CELL DESCRIPTION |
|---|---|---|
| | **SV3SPRD4** | Strand Pattern; Reinforcing Details; 4’-0” width<br>Use with standard PSV-3. |

| CELL | CELL NAME | CELL DESCRIPTION |
|---|---|---|
| | **SV34GRAD** | Slabs on Gradient in Excess of 1%<br>Use with standards PSV-3 and -4. |

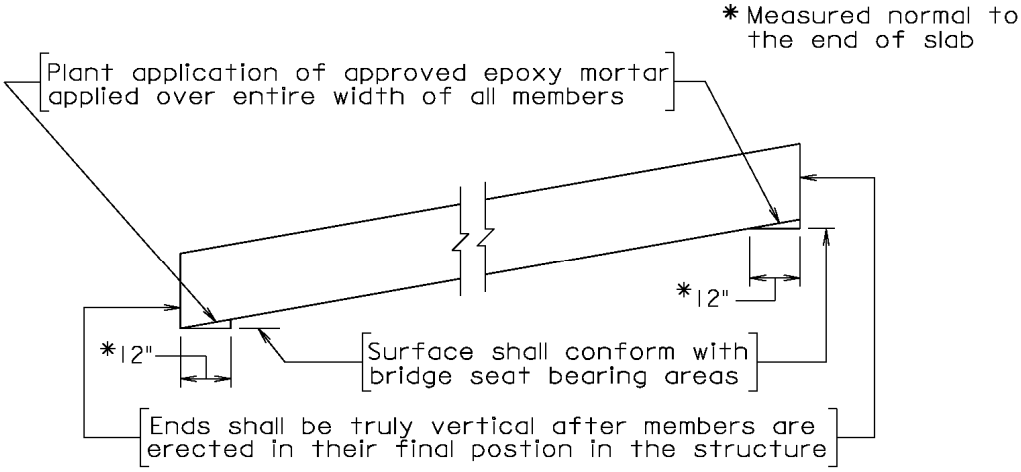


SLABS ON GRADIENT IN EXCESS OF 1%

| CELL | CELL NAME | CELL DESCRIPTION |
|---|---|---|
| | **SV4ELEV0** | Elevation; 0° skew; 15” / 18” / 21”<br>Use with standard PSV-4. |

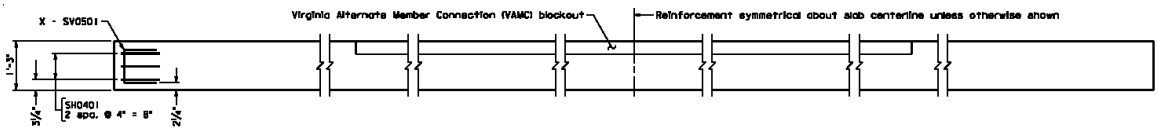


ELEVATION

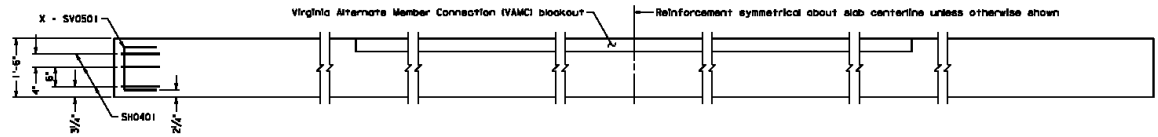


ELEVATION

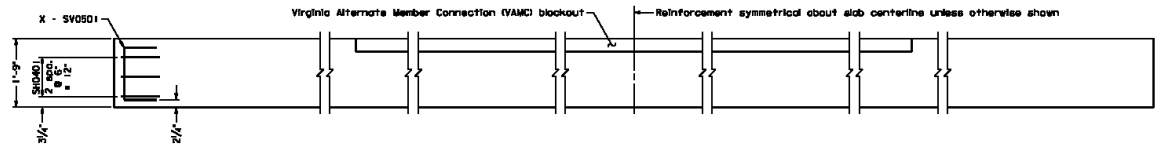


ELEVATION

| | | |
|---|---|---|
| | **SV4PLANB** | Plan; 0° skew; both 3’-0” and 4’-0” widths<br>Use with standard PSV-4. |

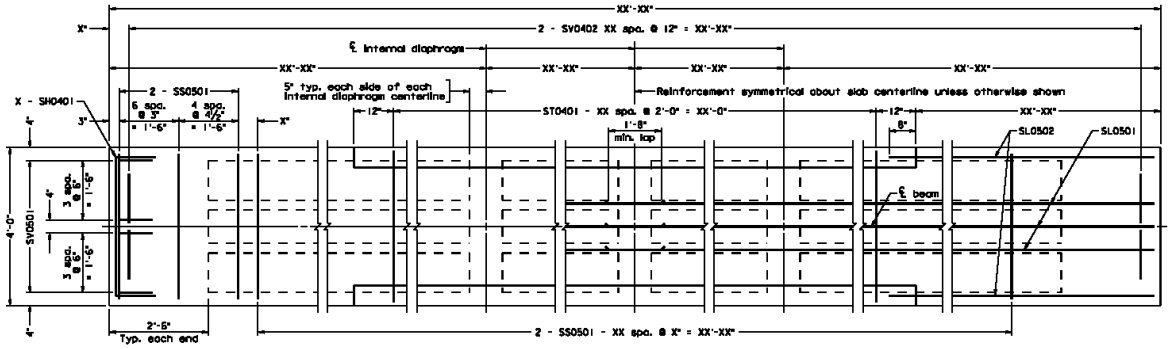


PLAN

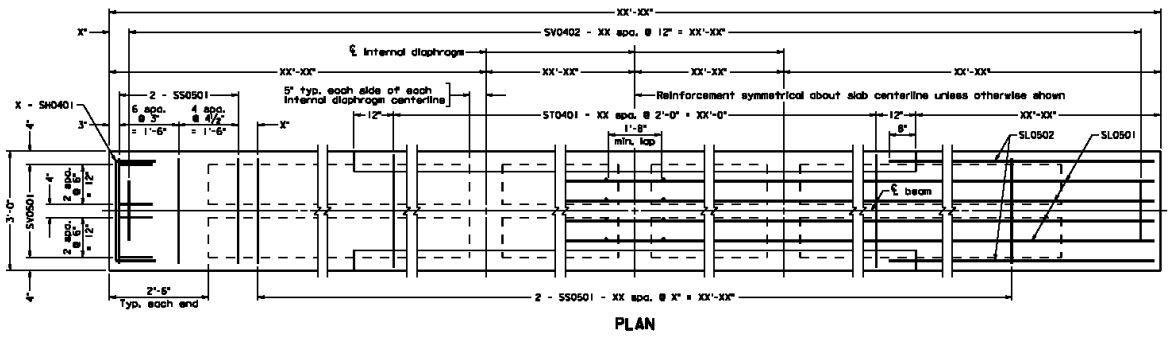


PLAN

| CELL | CELL NAME | CELL DESCRIPTION |
|---|---|---|
| | **SV4SPRD3** | Strand Pattern; Reinforcing Details; 3'-0" width<br>Use with standard PSV-4. |

| CELL | CELL NAME | CELL DESCRIPTION |
|---|---|---|
| | **SV4SPRD4** | Strand Pattern; Reinforcing Details; 4'-0: width<br>Use with standard PSV-4. |

| CELL | CELL NAME | CELL DESCRIPTION |
|---|---|---|
| | **SV5STRAI** | Section Thru Rail<br>Use with standard PSV-5. |

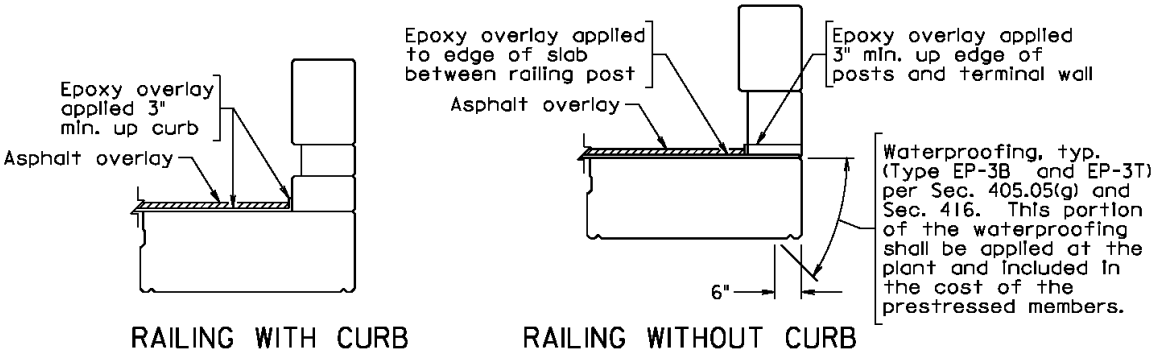


RAILING WITH CURB RAILING WITHOUT CURB

SECTION THRU RAIL

Scale: 1/2" = 1'-0"
(for asphalt overlay)

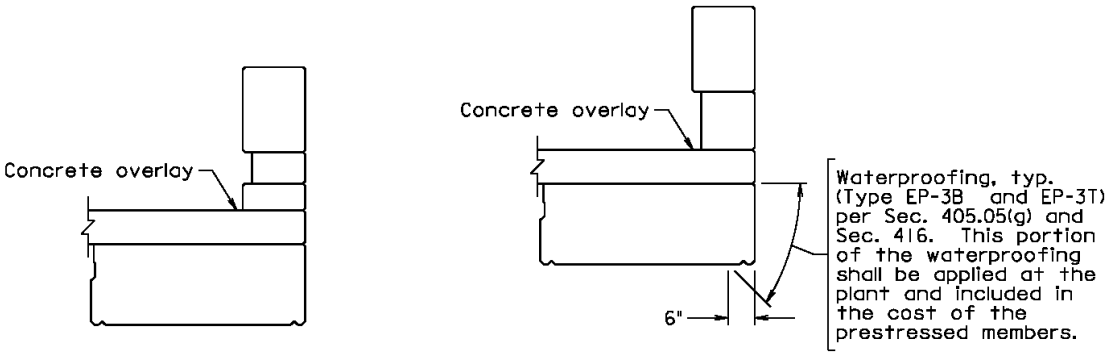


RAILING WITH CURB RAILING WITHOUT CURB

SECTION THRU RAIL

Scale: 1/2" = 1'-0"
(for concrete overlay)

| CELL | CELL NAME | CELL DESCRIPTION |
|---|---|---|
| | **BT1E0S3E** | Erection Diagram; 0° skew; 3'-0"; Edge on CL<br>Use with standard PBT-1. |

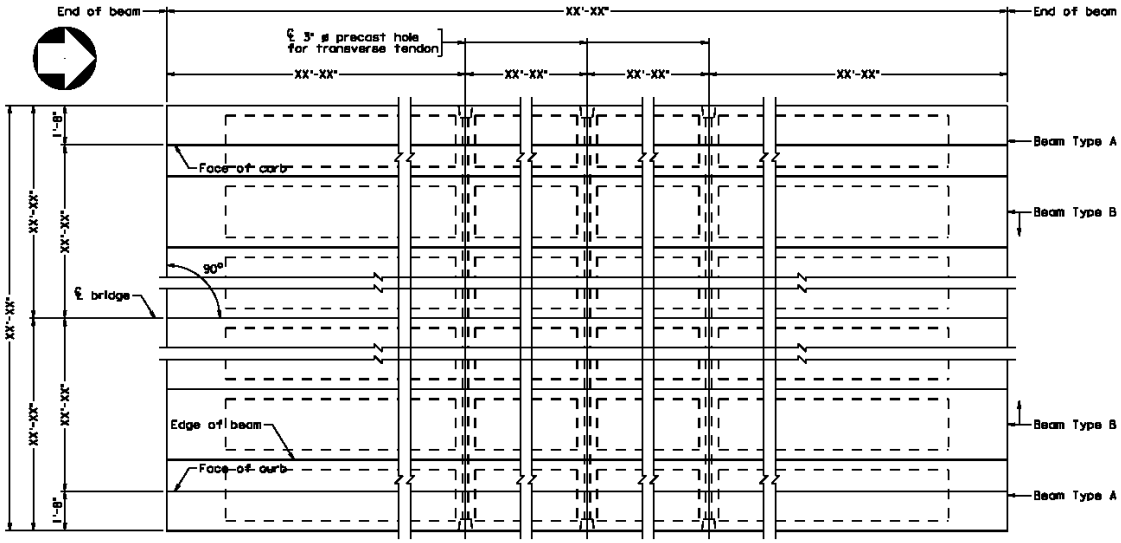


**ERECTION DIAGRAM**

Shear key limits not shown for clarity

| | | |
|---|---|---|
| | **BT1E0S3O** | Erection Diagram; 0° skew; 3'-0"; CL on slab<br>Use with standard PBT-1. |

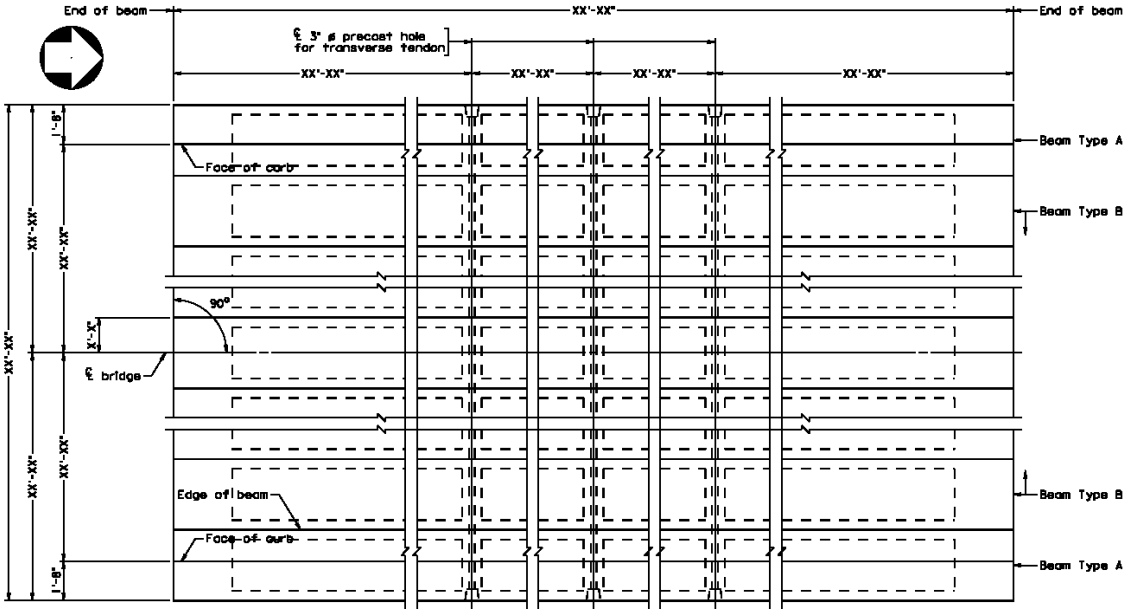


**ERECTION DIAGRAM**

Shear key limits not shown for clarity

| CELL | CELL NAME | CELL DESCRIPTION |
|---|---|---|
| | **BT1E0S4E** | Erection Diagram; 0° skew; 4'-0"; Edge on CL<br>Use with standard PBT-1. |

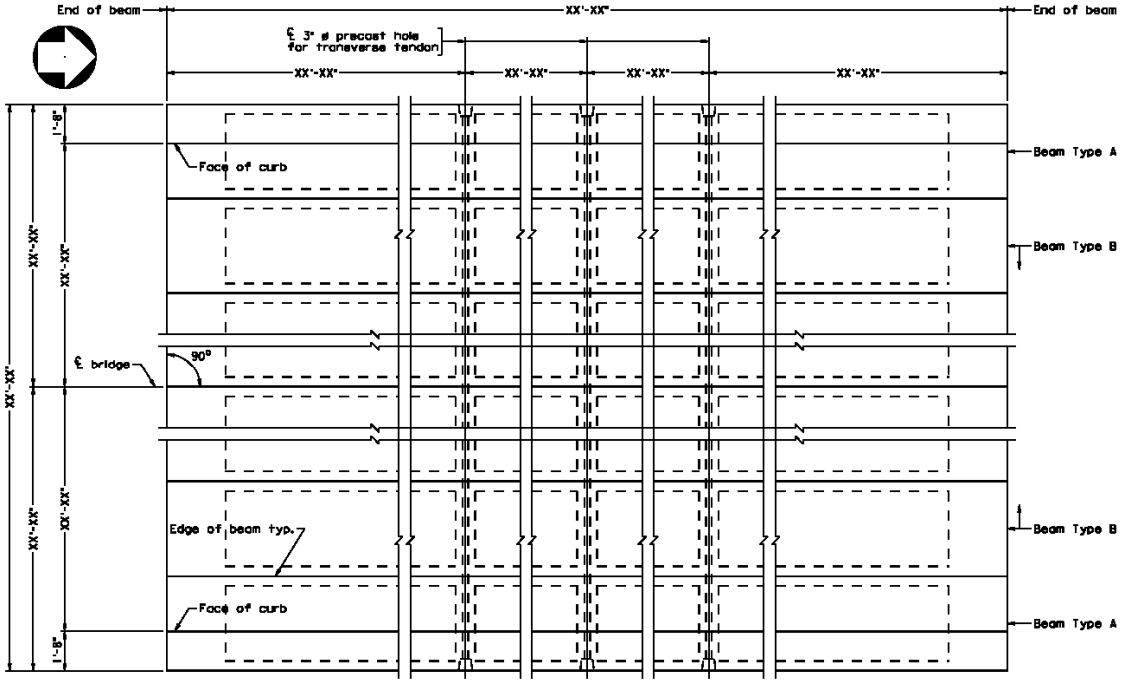


**ERECTION DIAGRAM**

Shear key limits not shown for clarity

| CELL | CELL NAME | CELL DESCRIPTION |
|---|---|---|
| | **BT1E0S4O** | Erection Diagram; 0° skew; 4'-0"; Edge on CL<br>Use with standard PBT-1. |

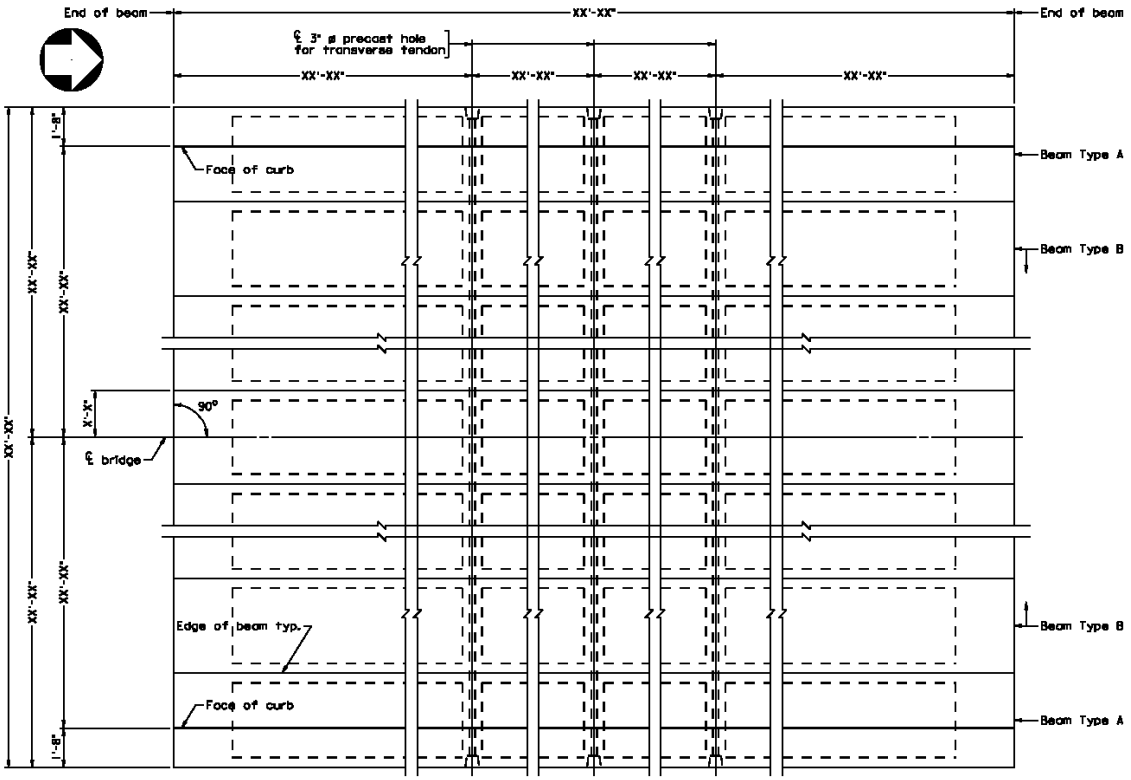


**ERECTION DIAGRAM**

Shear key limits not shown for clarity

| | | |
|---|---|---|
| | **BT2DETAA** | Detail A<br>Use with standard PBT-2A and PBT-2B. |

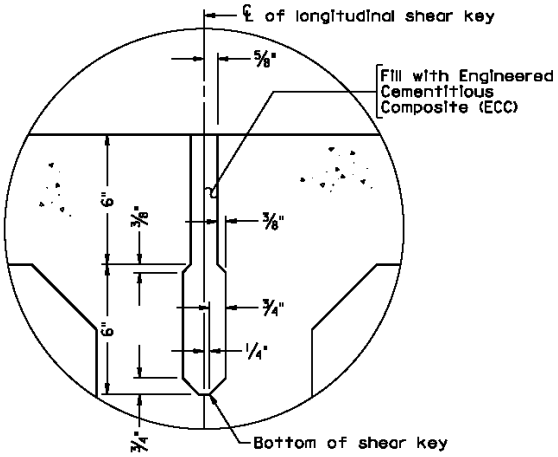


**DETAIL A**

Overlay not shown
All shear key dimensions typ. each side
Scale: 3" = 1'-0"

| CELL | CELL NAME | CELL DESCRIPTION |
|---|---|---|
| | **BT2TSALG** | Transverse Section, asphalt overlay, level beams, generic; Use with standard PBT-2A. |

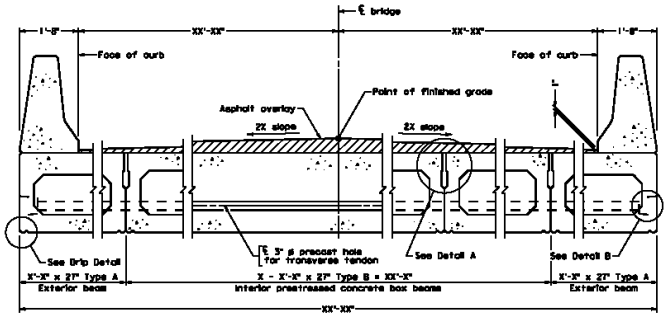


TRANSVERSE SECTION

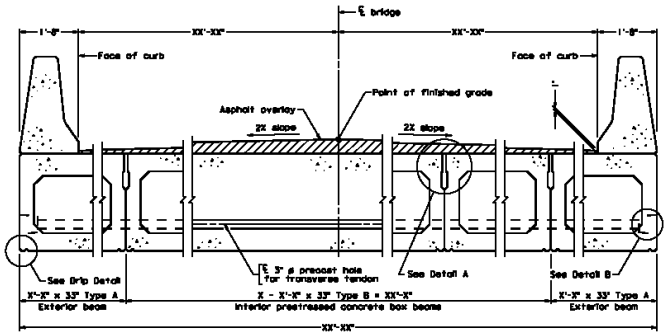


TRANSVERSE SECTION

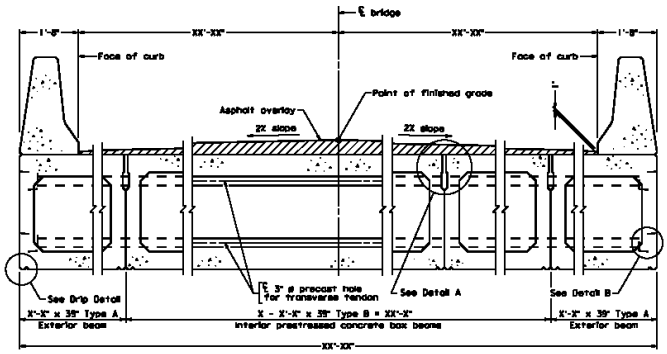


TRANSVERSE SECTION

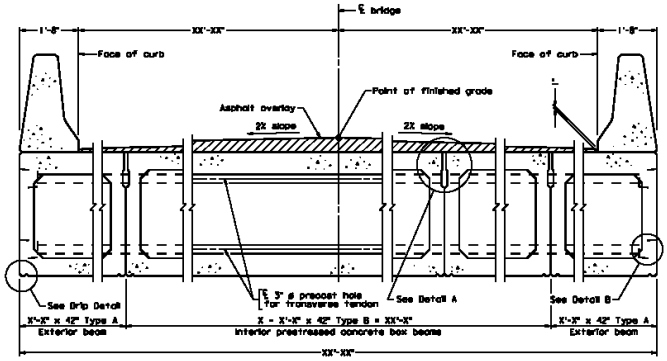


TRANSVERSE SECTION

| CELL | CELL NAME | CELL DESCRIPTION |
|---|---|---|
| | **BT2TSAS3** | Transverse Section; asphalt overlay; sloped beams; 3'-0" width; Use with standard PBT-2A. |

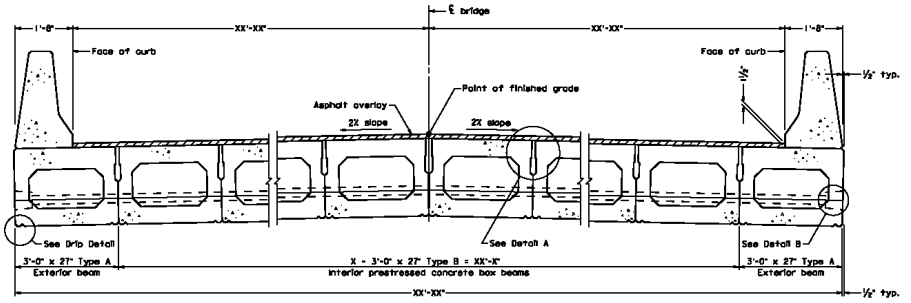


TRANSVERSE SECTION

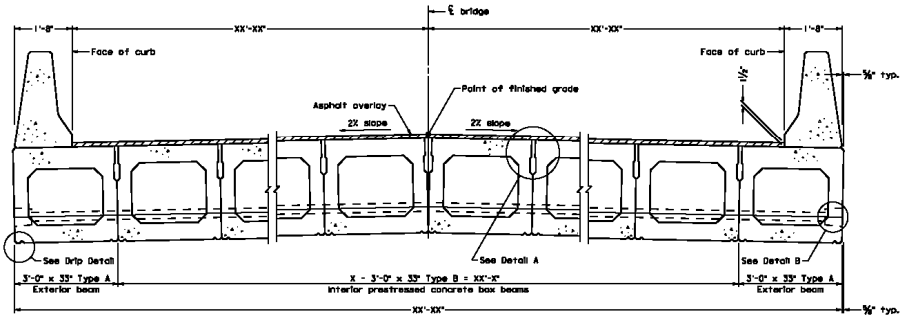


TRANSVERSE SECTION

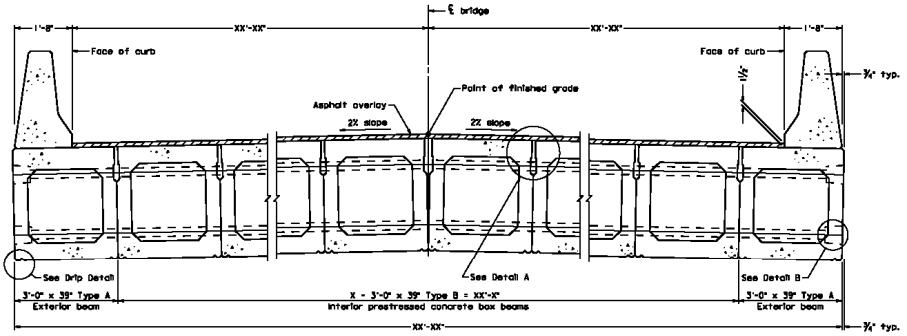


TRANSVERSE SECTION

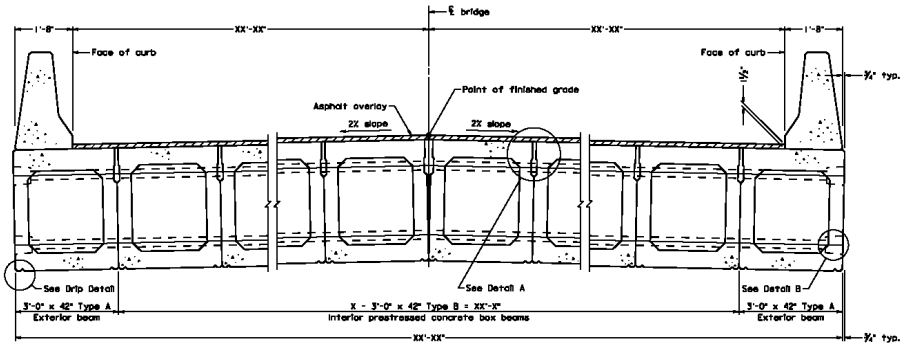


TRANSVERSE SECTION

| CELL | CELL NAME | CELL DESCRIPTION |
|---|---|---|
| | **BT2TSAS4** | Transverse Section; asphalt overlay; sloped beams; 4’-0” width; Use with standard PBT-2A. |

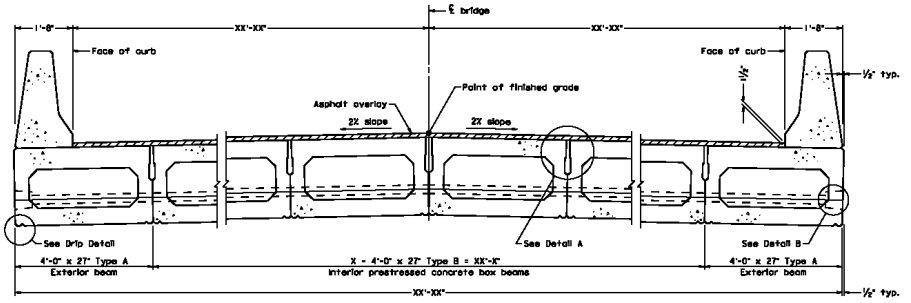


TRANSVERSE SECTION

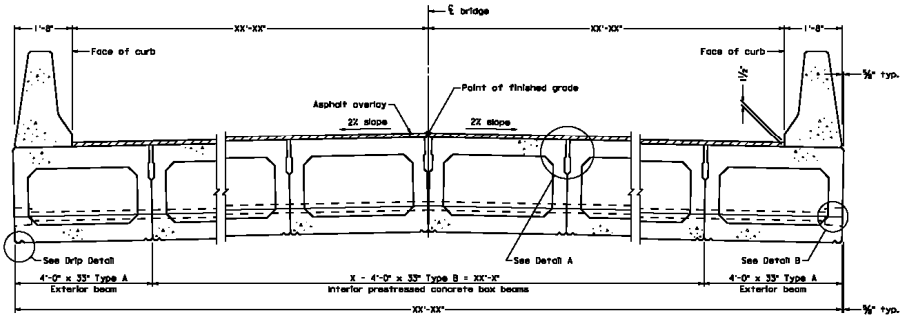


TRANSVERSE SECTION

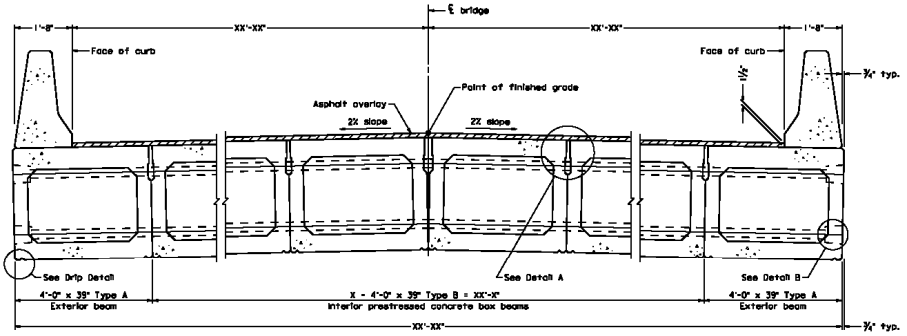


TRANSVERSE SECTION

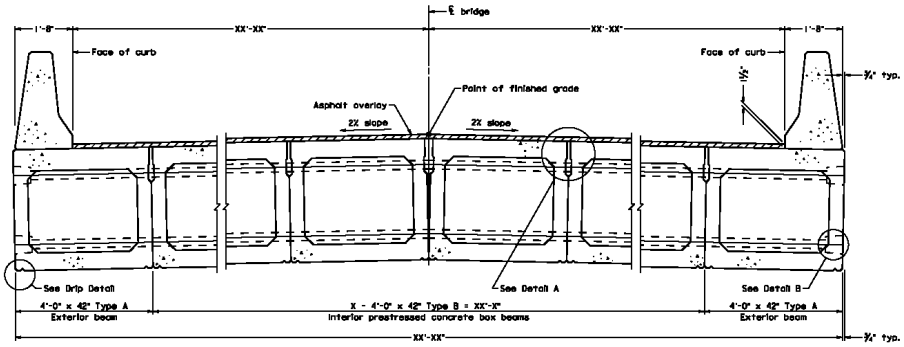


TRANSVERSE SECTION

| CELL | CELL NAME | CELL DESCRIPTION |
|---|---|---|
| | **BT2TSCLG** | Transverse Section; concrete overlay; level beams; generic; Use with standard PBT-2B. |

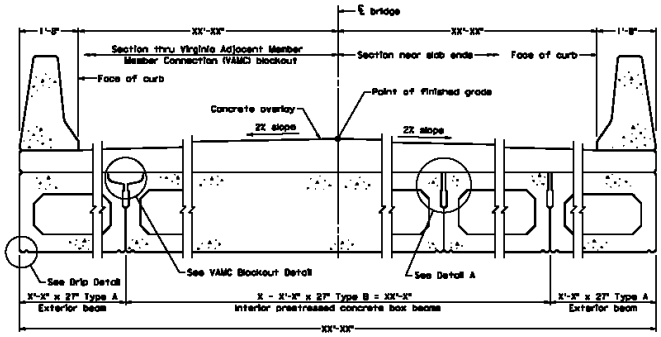


TRANSVERSE SECTION

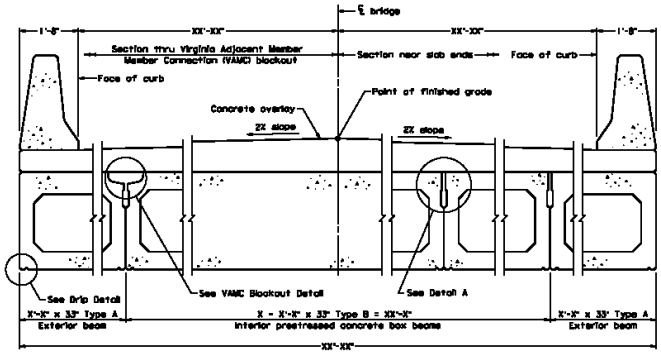


TRANSVERSE SECTION

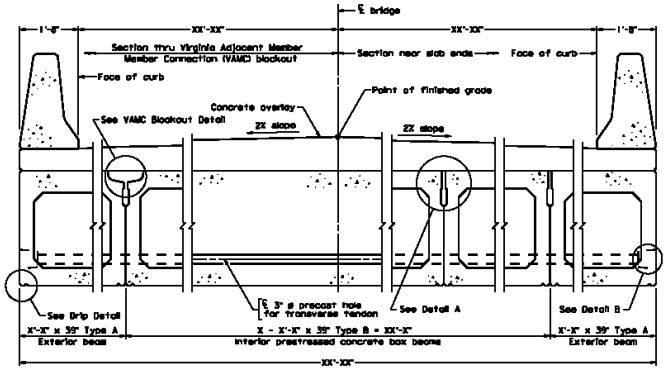


TRANSVERSE SECTION

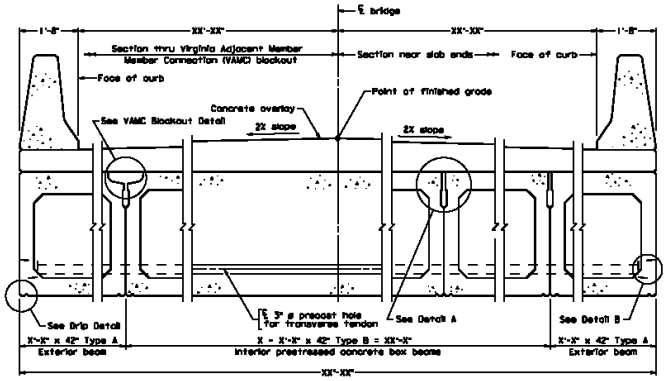


TRANSVERSE SECTION

| CELL | CELL NAME | CELL DESCRIPTION |
|---|---|---|
| | **BT2TSCS3** | Transverse Section; concrete overlay; sloped beams; 3'-0" width; Use with standard PBT-2B. |

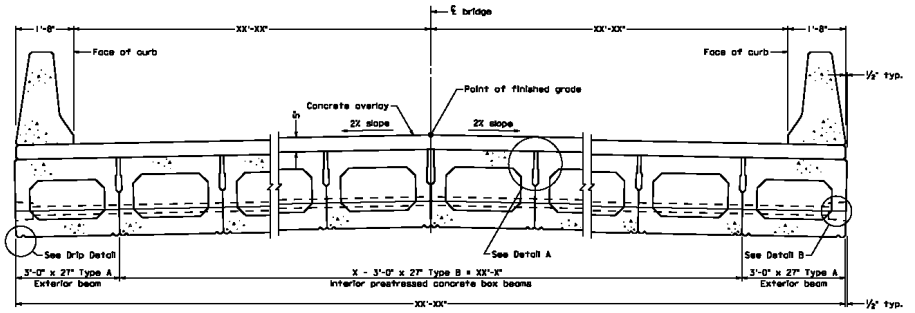


TRANSVERSE SECTION

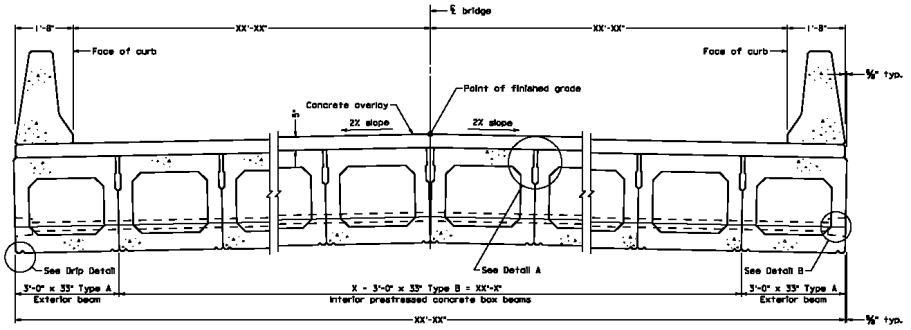


TRANSVERSE SECTION

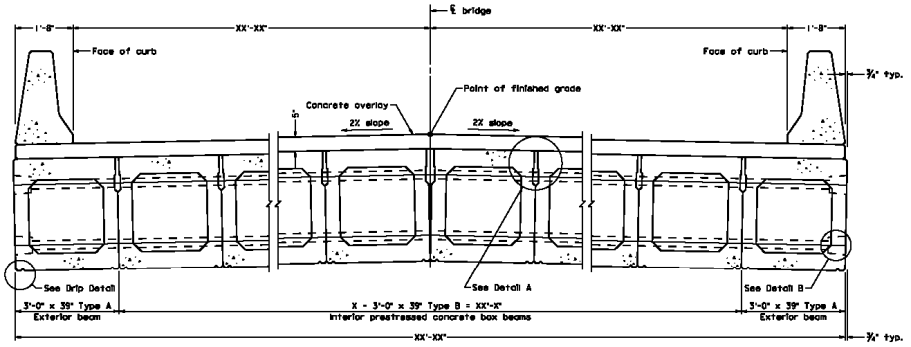


TRANSVERSE SECTION

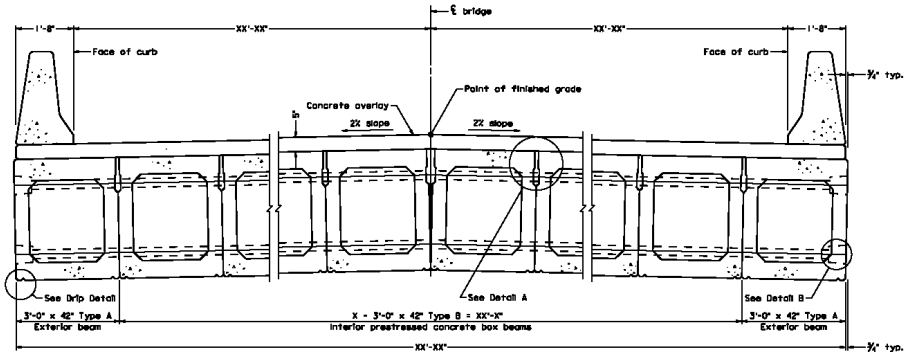


TRANSVERSE SECTION

| CELL | CELL NAME | CELL DESCRIPTION |
|---|---|---|
| | **BT2TSCS4** | Transverse Section; concrete overlay; sloped beams; 4’-0” width; Use with standard PBT-2B. |

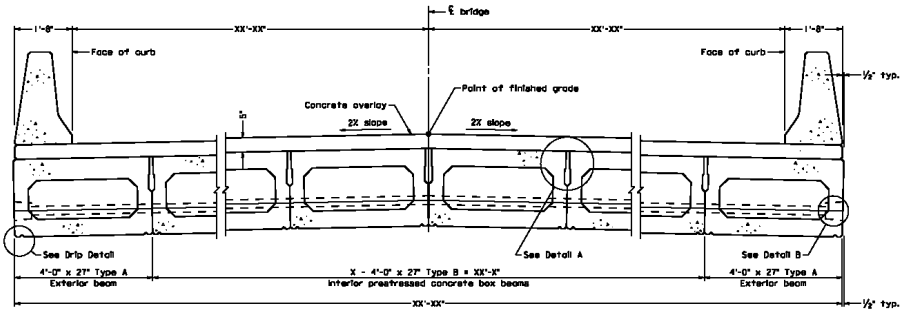


TRANSVERSE SECTION

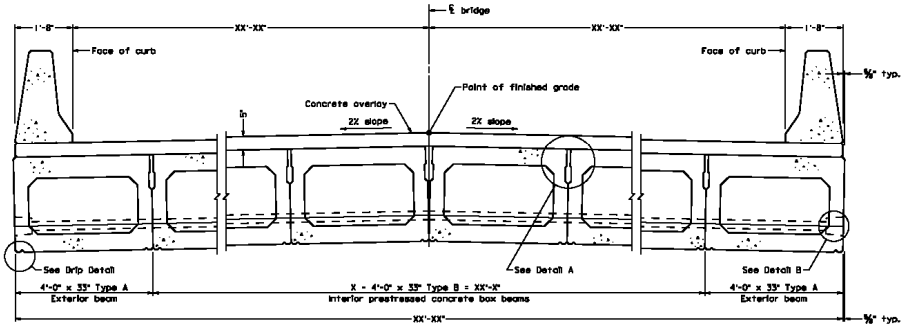


TRANSVERSE SECTION

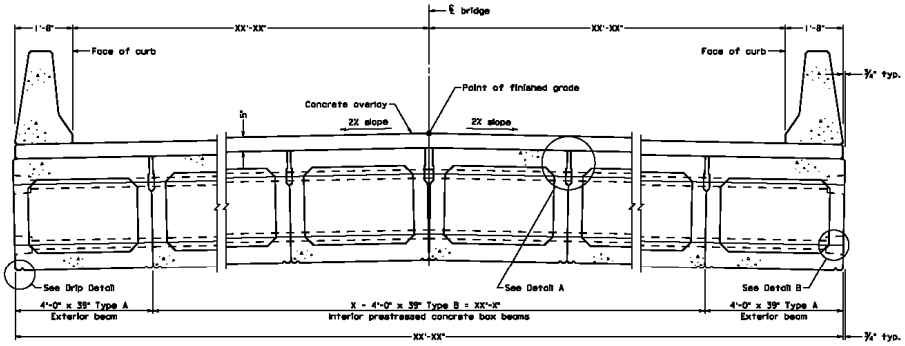


TRANSVERSE SECTION

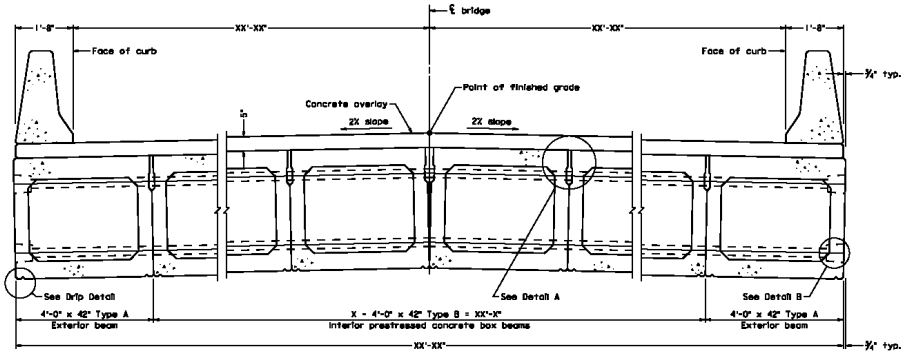


TRANSVERSE SECTION

| CELL | CELL NAME | CELL DESCRIPTION |
|---|---|---|
| | **BT2TYPS3** | Typical Sections; 3'-0" x 27" / 33" / 39" / 42"<br>Use with standard PST-2A and PST-2B. |

| CELL | CELL NAME | CELL DESCRIPTION |
|---|---|---|
| | **BT2TYPS4** | Typical Sections; 4’-0” x 27” / 33” / 39” / 42”;<br>Use with standard PBT-2A and PBT-2B. |

| CELL | CELL NAME | CELL DESCRIPTION |
|---|---|---|
| | **BT3ANCHD** | Anchor Detail and Alternate Anchor Detail<br>Use with standard PBT-3. |

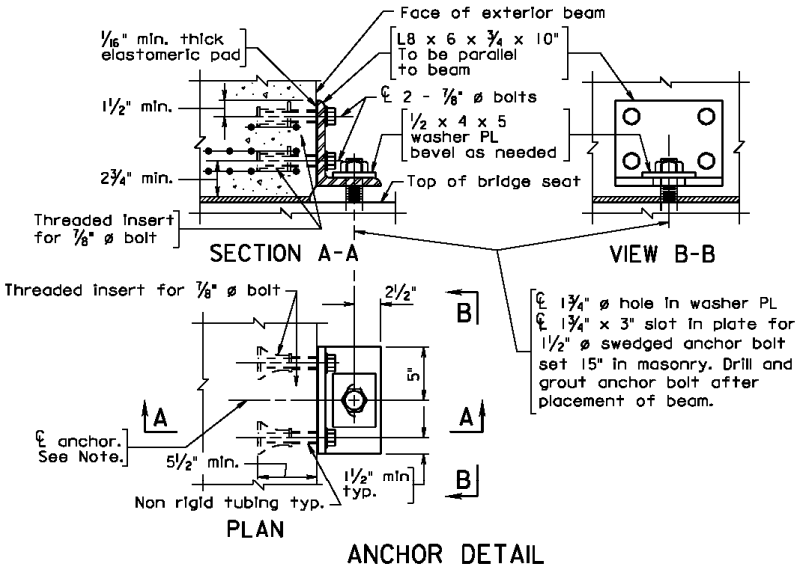


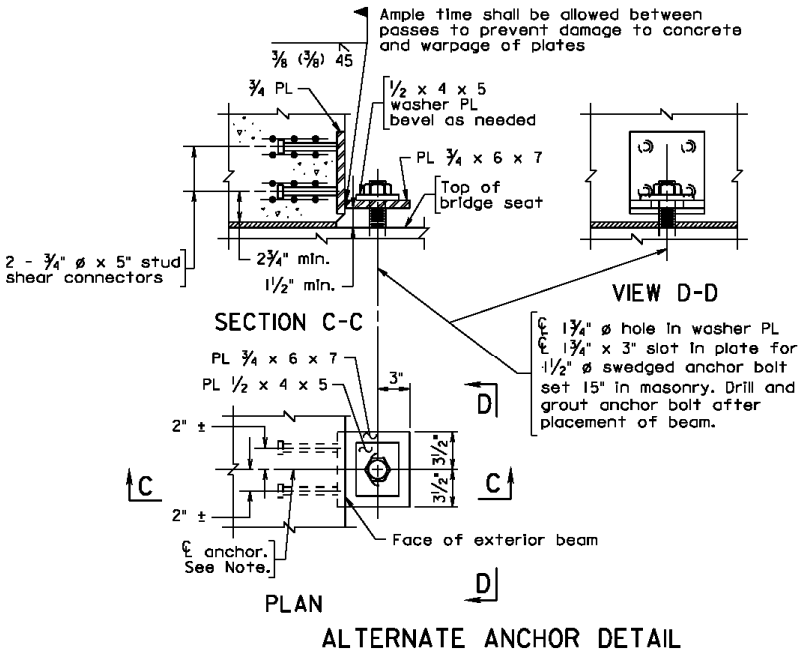


Notes:

All steel in Anchor Detail except stud shear connectors shall be ASTM A709 grade 36 and shall be galvanized.

℄ Anchor may be shifted as approved by the Engineer to provide minimum concrete cover of 2" for threaded inserts or stud shear connectors.

Threaded inserts when embedded as shown shall develop full strength strength of 7/8" ø threaded bolt.

| CELL | CELL NAME | CELL DESCRIPTION |
|---|---|---|
| | **BT3ELEV0** | Elevation; 0° skew; 27” / 33” / 39” /42”<br>Use with standard PBT-3. |

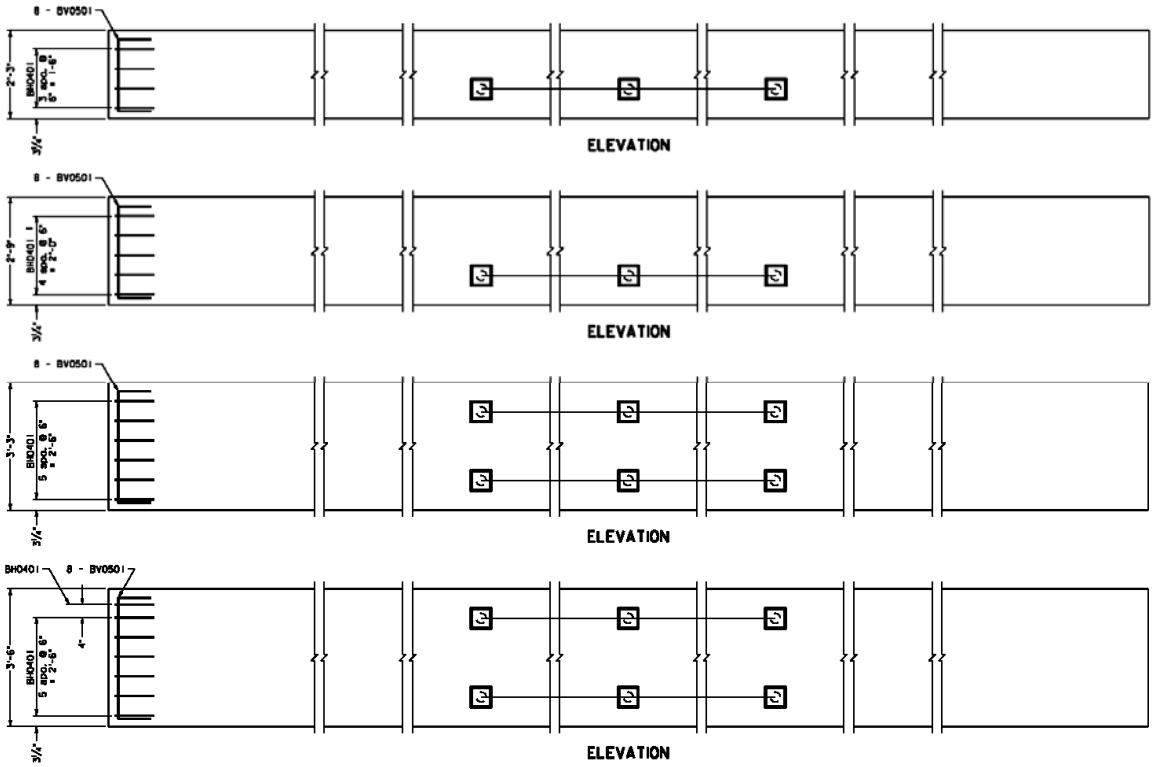

| CELL | CELL NAME | CELL DESCRIPTION |
|---|---|---|
| | **BT3PLANB** | Plan; 0° skew; both 3'-0" and 4'-0" widths<br>Use with standard PBT-3. |

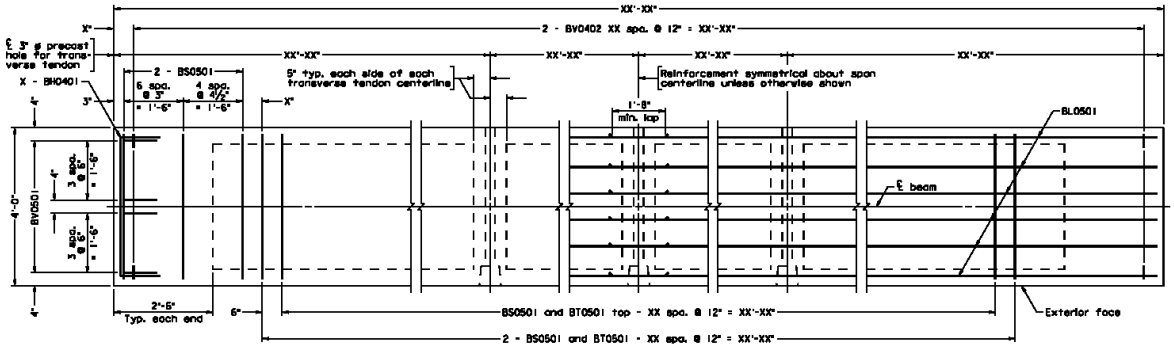


PLAN

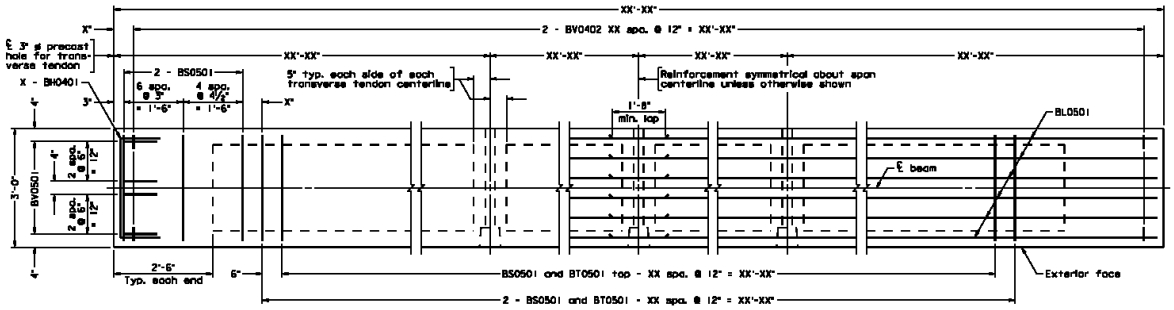


PLAN

| CELL | CELL NAME | CELL DESCRIPTION |
|---|---|---|
| | **BT3SPRD3** | Strand Pattern; Reinforcing Details; 3'-0" width<br>Use with standard PBT-3. |

| CELL | CELL NAME | CELL DESCRIPTION |
|---|---|---|
| | **BT3SPRD4** | Strand Pattern; Reinforcing Details; 4’-0” width<br>Use with standard PBT-3. |

| CELL | CELL NAME | CELL DESCRIPTION |
|---|---|---|
| | **BT34GRAD** | Beams on Gradient in Excess of 1%<br>Use with standards PBT-3 and -4. |

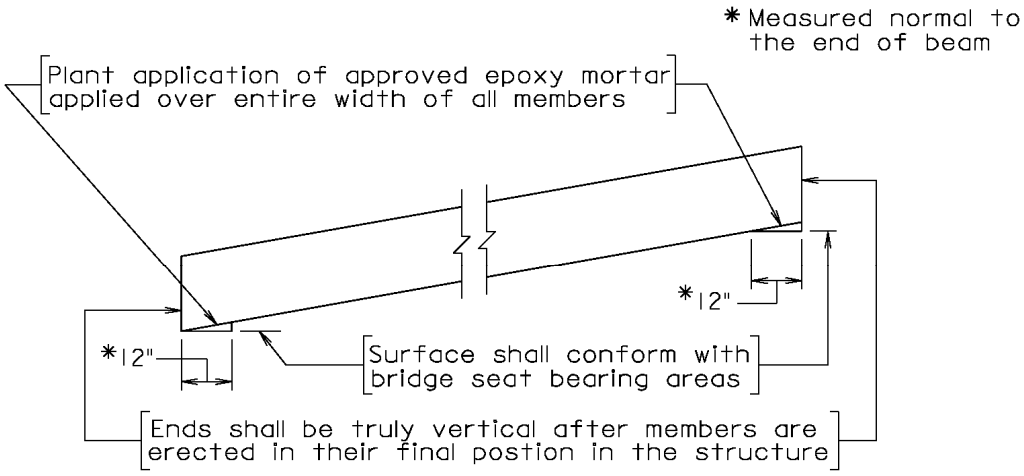


BEAMS ON GRADIENT IN EXCESS OF 1%

| CELL | CELL NAME | CELL DESCRIPTION |
|---|---|---|
| | **BT4ELEV0** | Elevation; 0° skew; 27” / 33” / 39” / 42”<br>Use with standard PBT-4. |

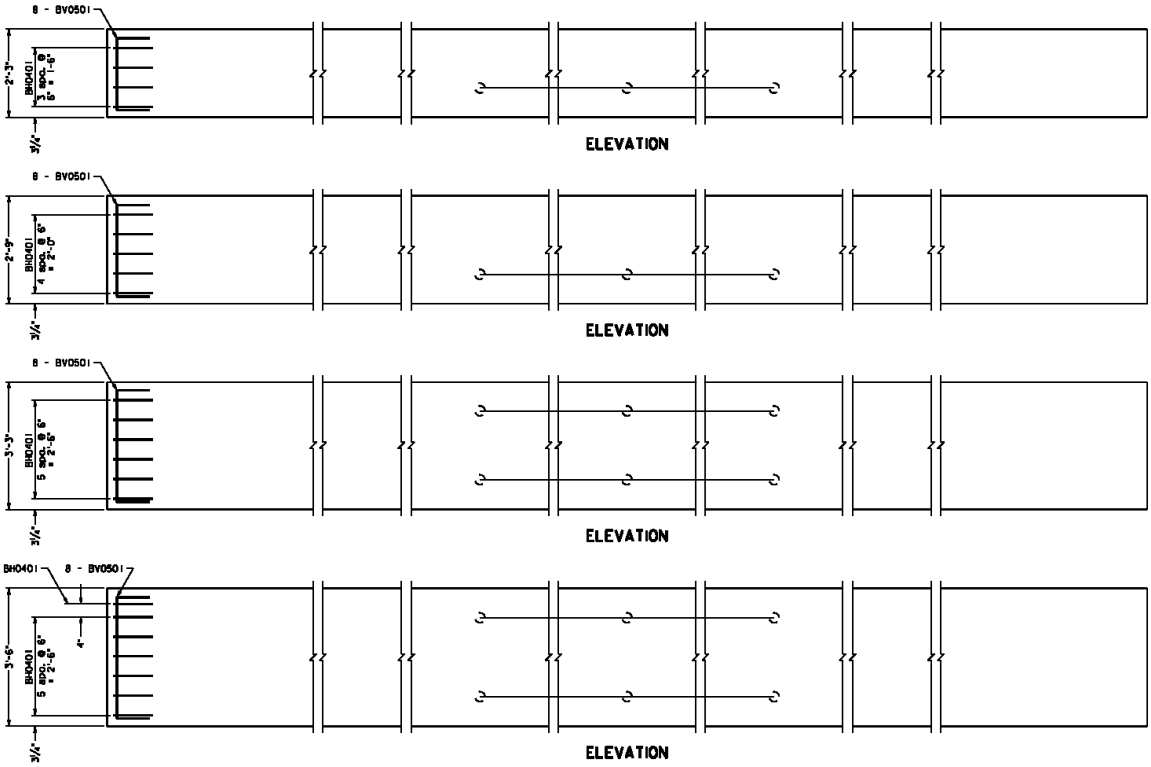

| CELL | CELL NAME | CELL DESCRIPTION |
|---|---|---|
| | **BT4PLANB** | Plan; 0° skew; both 3'-0" and 4'-0" widths<br>Use with standard PBT-4. |

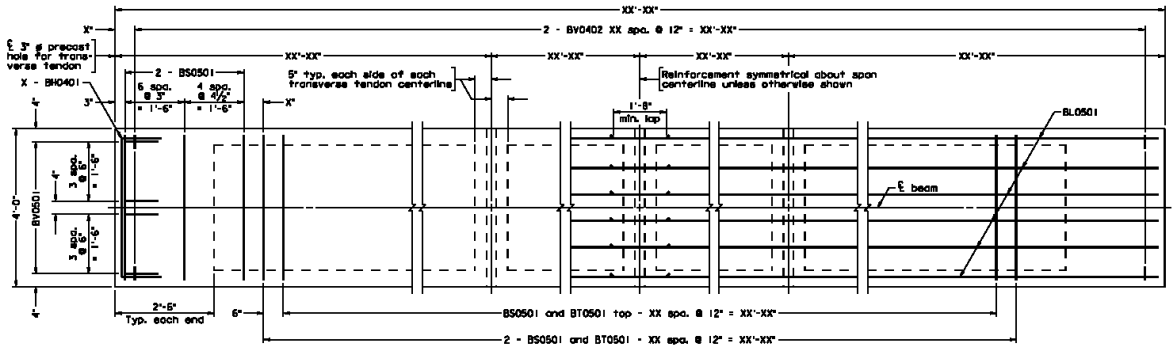


PLAN

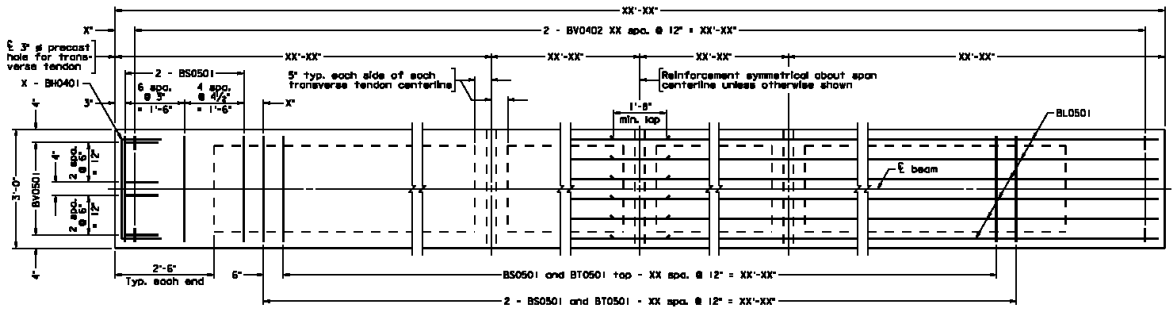


PLAN

| CELL | CELL NAME | CELL DESCRIPTION |
|---|---|---|
| | **BT4SPRD3** | Strand Pattern; Reinforcing Details; 3'-0" width<br>Use with standard PBT-4. |

| CELL | CELL NAME | CELL DESCRIPTION |
|---|---|---|
| | **BT4SPRD4** | Strand Pattern; Reinforcing Details; 4'-0: width<br>Use with standard PBT-4. |

| CELL | CELL NAME | CELL DESCRIPTION |
|---|---|---|
| | **BT5STRAI** | Section Thru Rail<br>Use with standard PBT-5. |

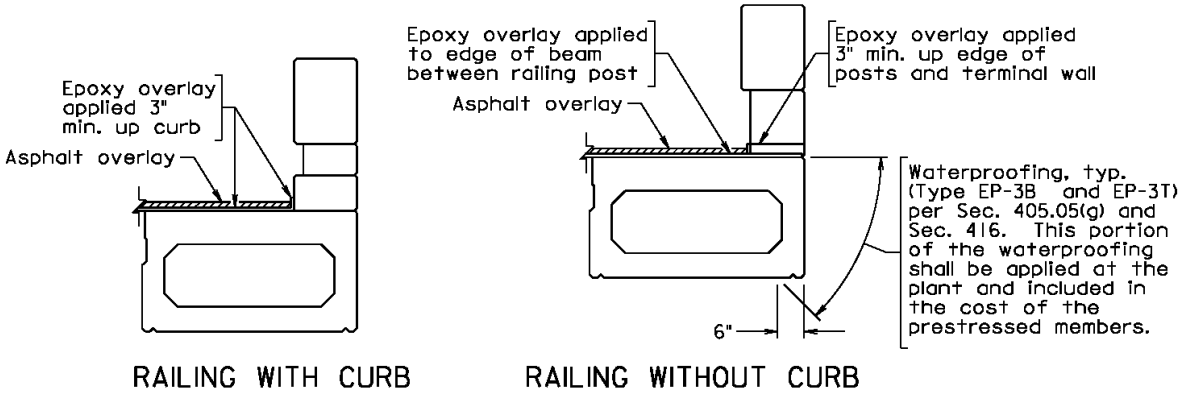


RAILING WITH CURB RAILING WITHOUT CURB

SECTION THRU RAIL

Scale: ½" = 1'-0"
(for asphalt overlay)

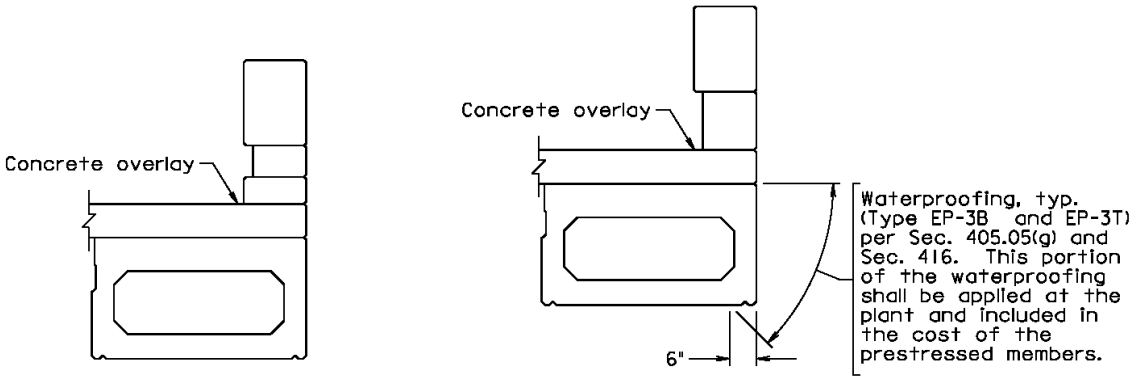


RAILING WITH CURB RAILING WITHOUT CURB

SECTION THRU RAIL

Scale: ½" = 1'-0"
(for concrete overlay)

| CELL | CELL NAME | CELL DESCRIPTION |
|---|---|---|
| | **BV1E0S3E** | Erection Diagram; 0° skew; 3'-0"; Edge on CL<br>Use with standard PBV-1. |

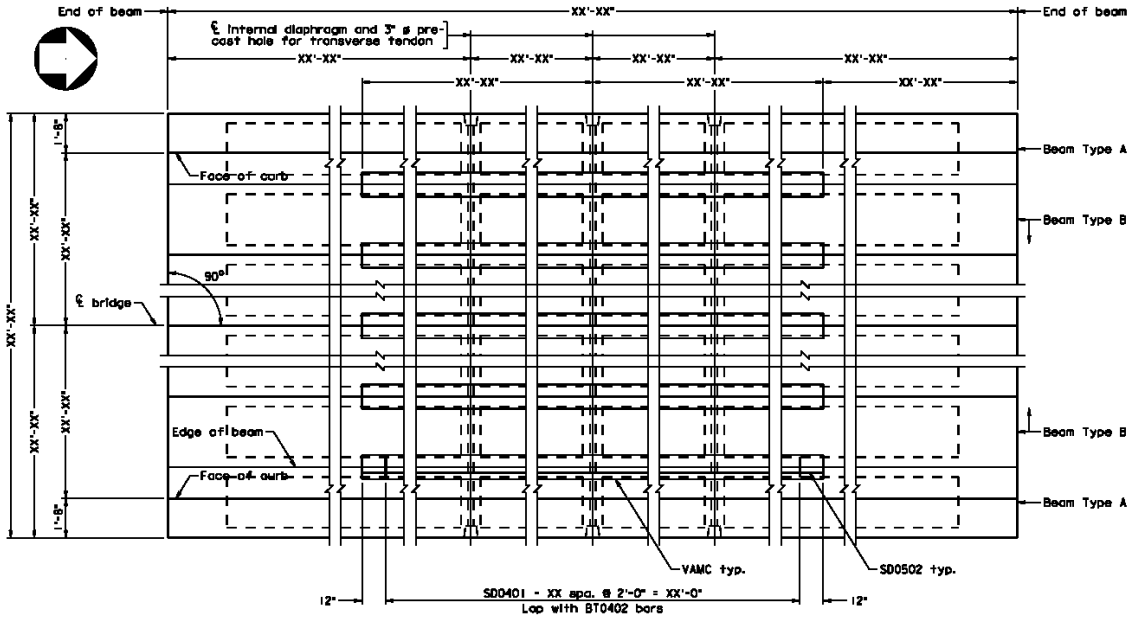


**ERECTION DIAGRAM**

Shear key limits not shown for clarity

| | | |
|---|---|---|
| | **BV1E0S3O** | Erection Diagram; 0° skew; 3'-0"; CL on slab<br>Use with standard PBV-1. |

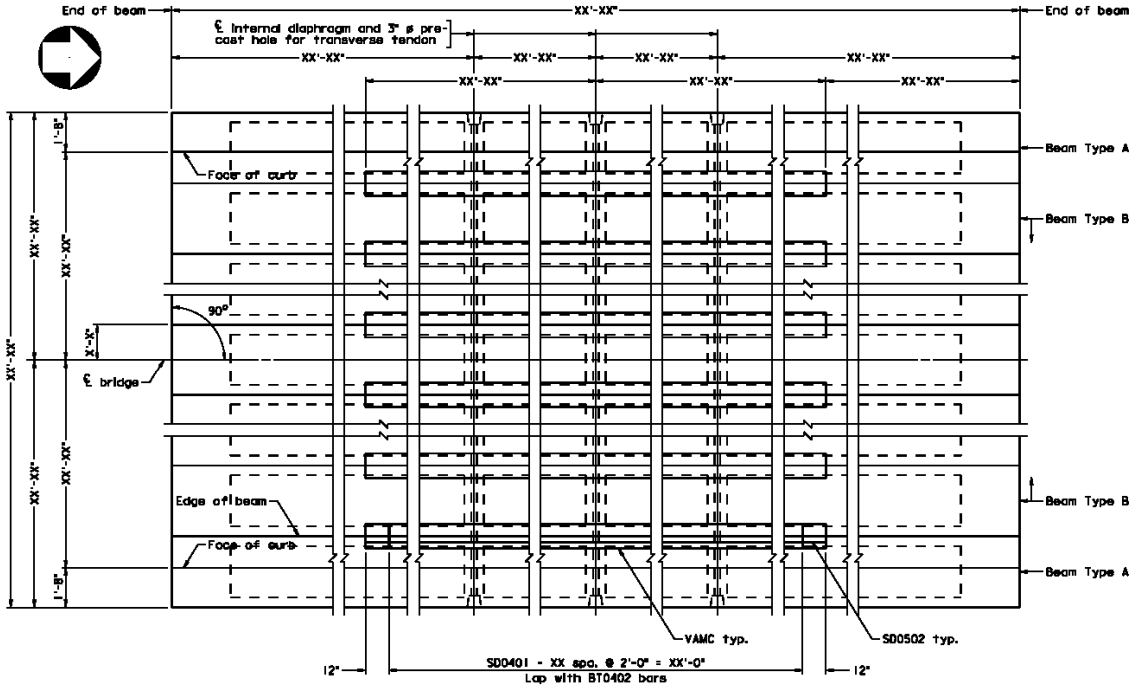


**ERECTION DIAGRAM**

Shear key limits not shown for clarity

| CELL | CELL NAME | CELL DESCRIPTION |
|---|---|---|
| | **BV1E0S4E** | Erection Diagram; 0° skew; 4'-0"; Edge on CL<br>Use with standard PBV-1. |

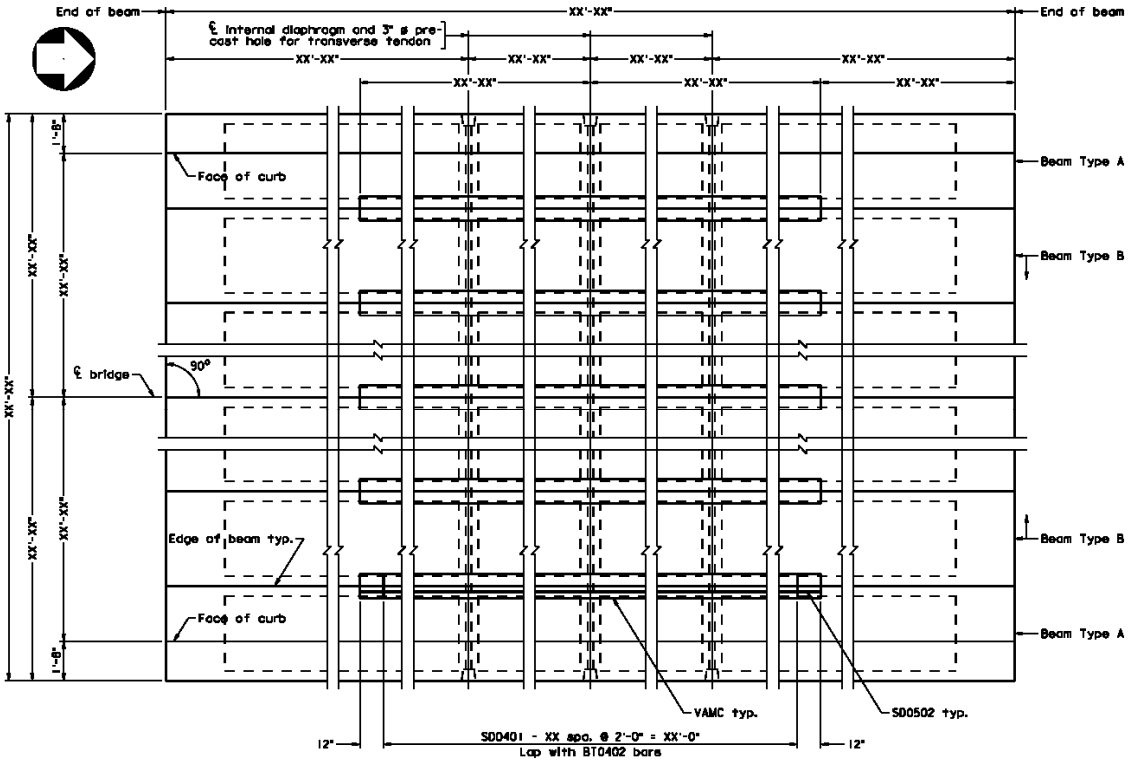


**ERECTION DIAGRAM**

Shear key limits not shown for clarity

| CELL | CELL NAME | CELL DESCRIPTION |
|---|---|---|
| | **BV1E0S4O** | Erection Diagram; 0° skew; 4'-0"; Edge on CL<br>Use with standard PBV-1. |

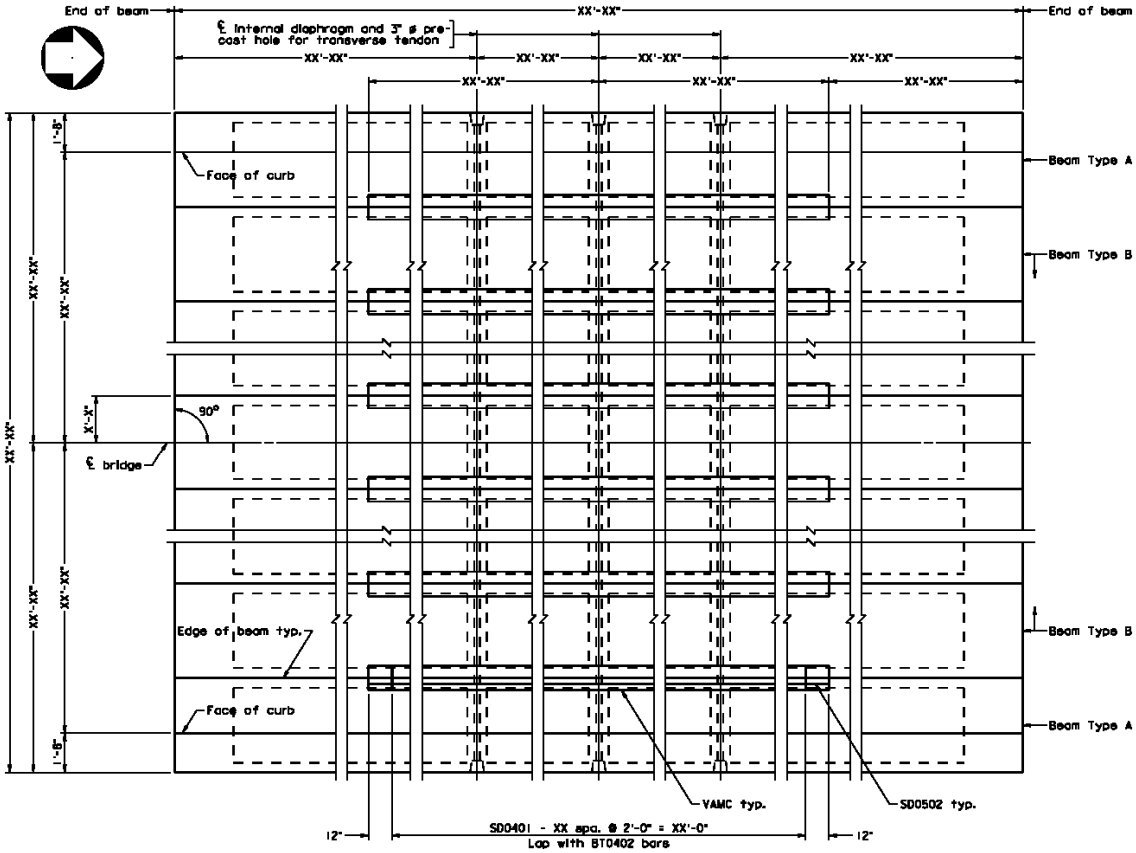


**ERECTION DIAGRAM**

Shear key limits not shown for clarity

| | | |
|---|---|---|
| | **BV2DETAA** | Detail A<br>Use with standard PBV-2A and PBV-2B. |

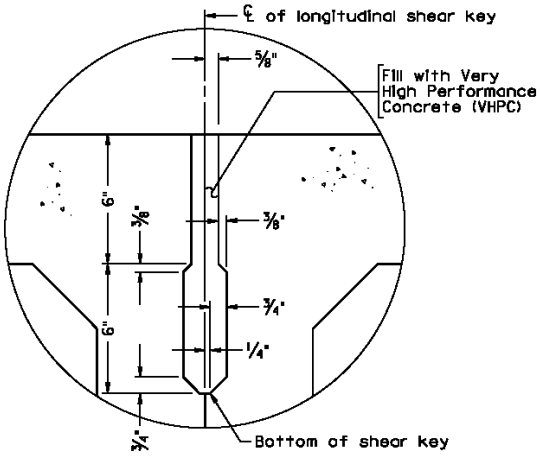


**DETAIL A**

Overlay not shown
All shear key dimensions typ. each side
Scale: 3" = 1'-0"

| CELL | CELL NAME | CELL DESCRIPTION |
|---|---|---|
| | **BV2TSALG** | Transverse Section, asphalt overlay, level slabs, generic; Use with standard PBV-2A. |

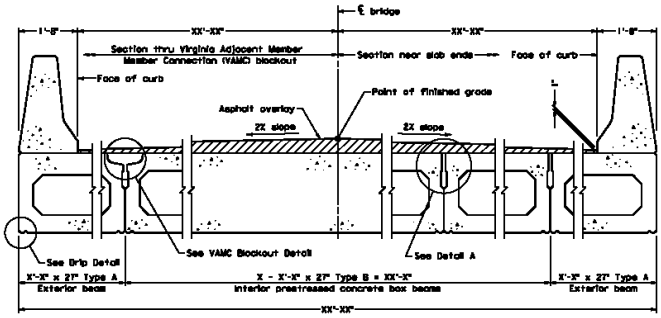


TRANSVERSE SECTION

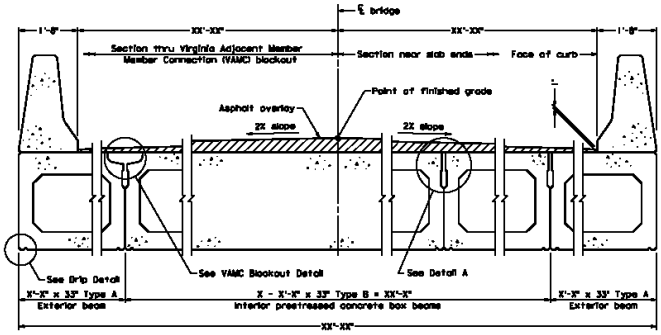


TRANSVERSE SECTION

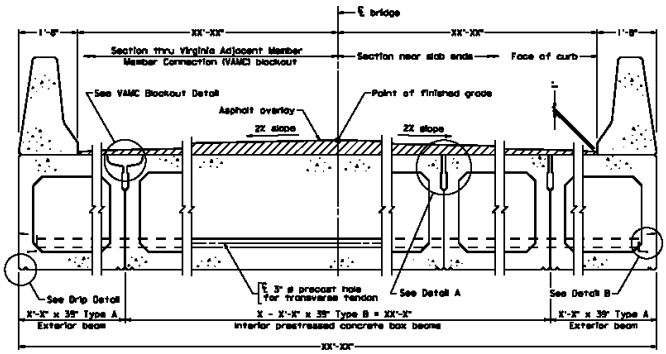


TRANSVERSE SECTION

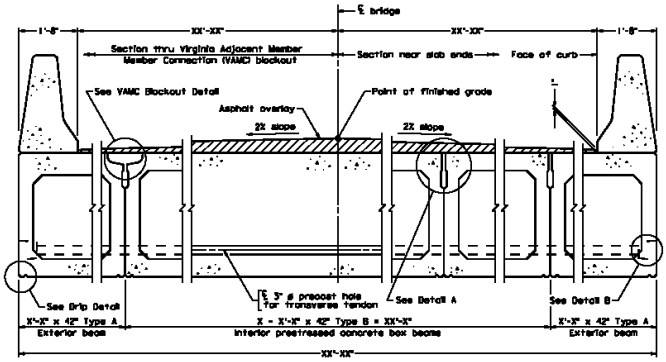


TRANSVERSE SECTION

| CELL | CELL NAME | CELL DESCRIPTION |
|---|---|---|
| | **BV2TSAS3** | Transverse Section; asphalt overlay; sloped beams; 3'-0" width; Use with standard PBV-2A. |

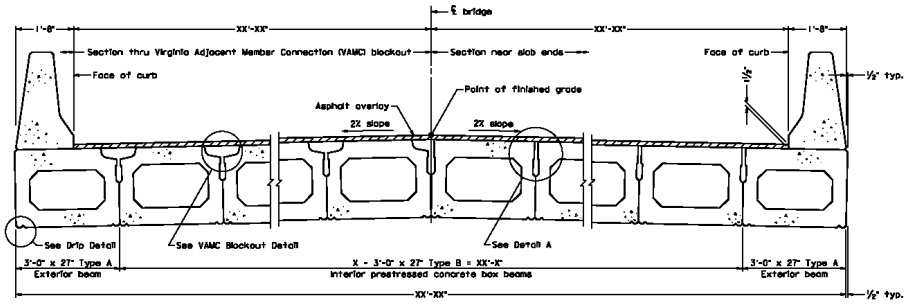


TRANSVERSE SECTION

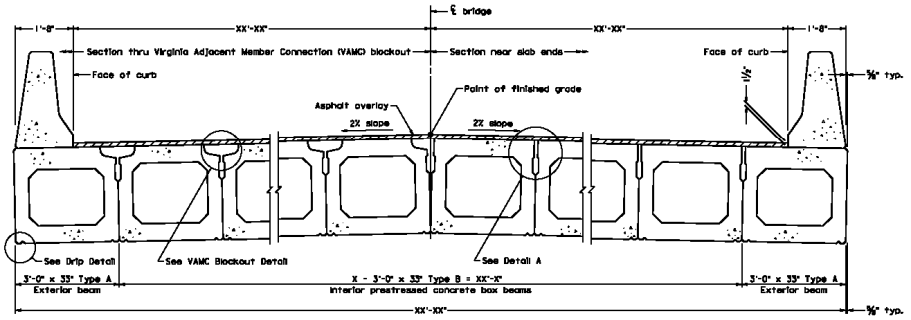


TRANSVERSE SECTION

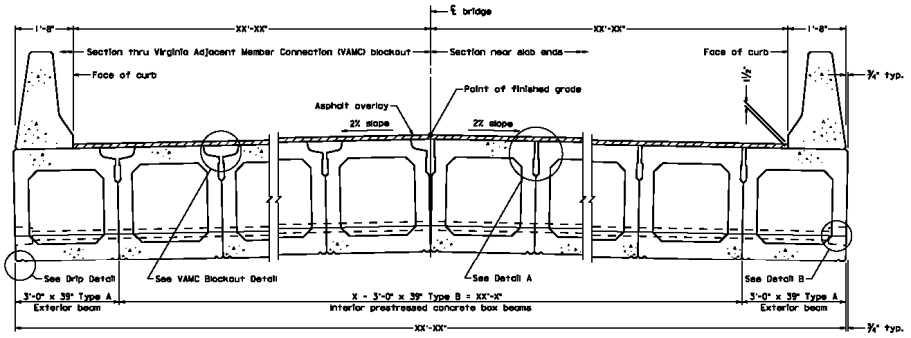


TRANSVERSE SECTION

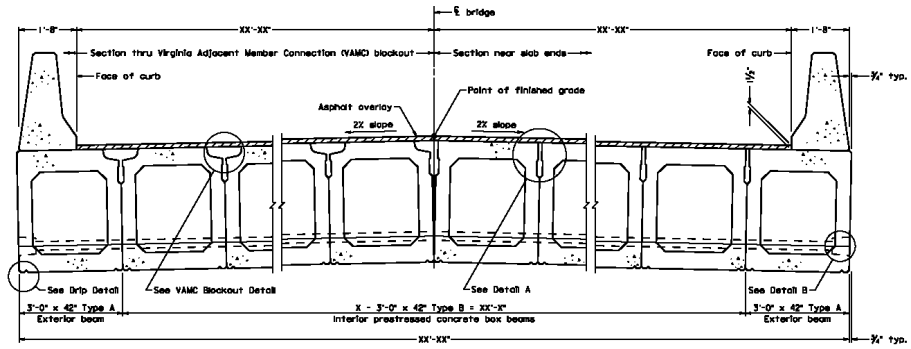


TRANSVERSE SECTION

| CELL | CELL NAME | CELL DESCRIPTION |
|---|---|---|
| | **BV2TSAS4** | Transverse Section; asphalt overlay; sloped beams; 4'-0" width; Use with standard PBV-2A. |

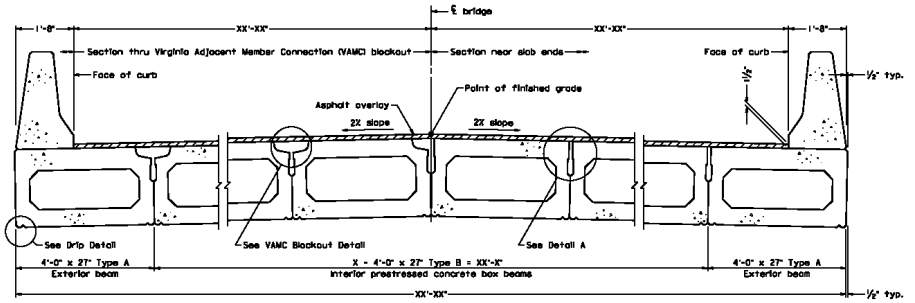


TRANSVERSE SECTION

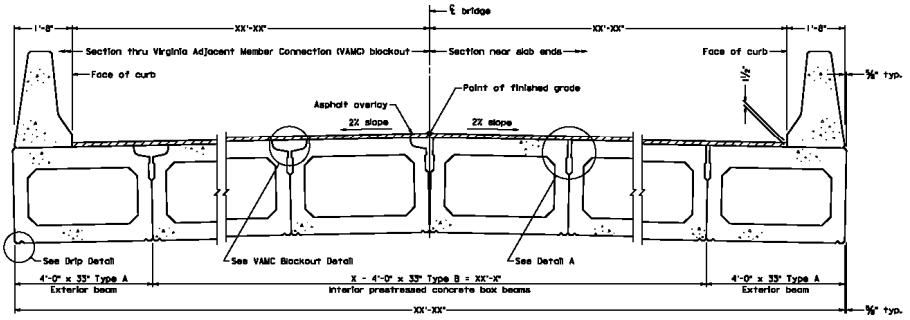


TRANSVERSE SECTION

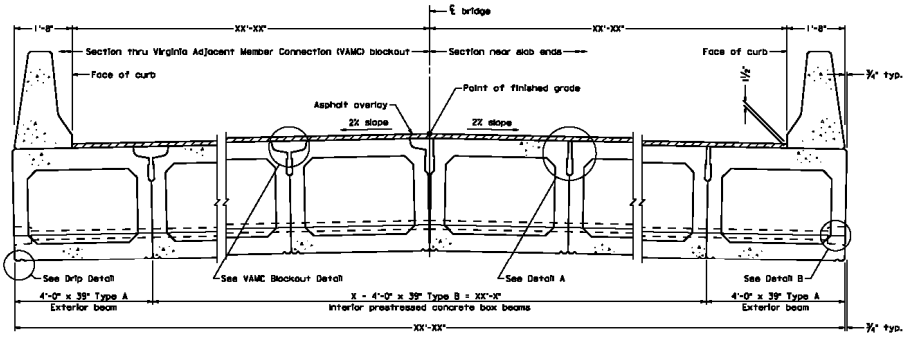


TRANSVERSE SECTION

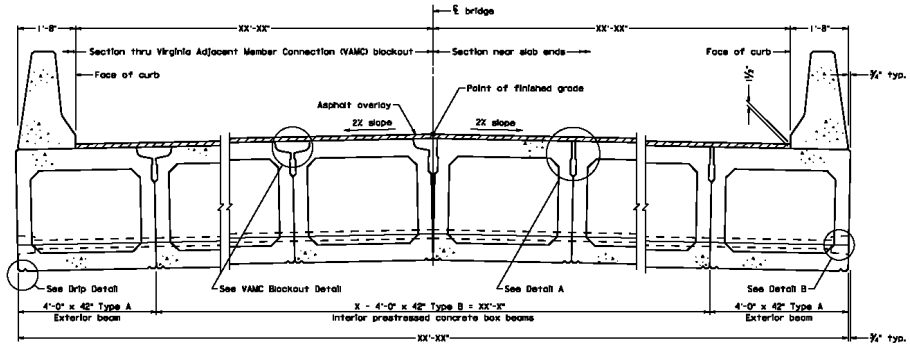


TRANSVERSE SECTION

| CELL | CELL NAME | CELL DESCRIPTION |
|---|---|---|
| | **BV2TSCLG** | Transverse Section; concrete overlay; level beams; generic Use with standard PBV-2B. |

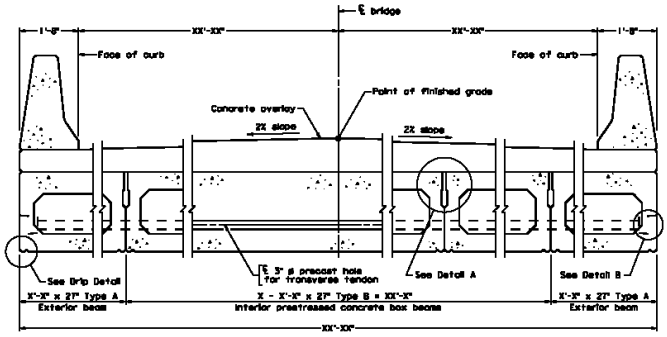


TRANSVERSE SECTION

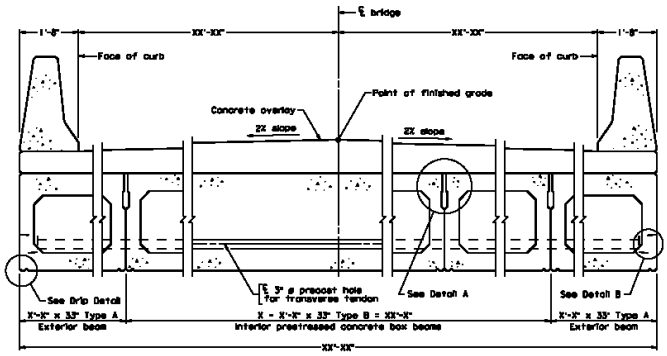


TRANSVERSE SECTION

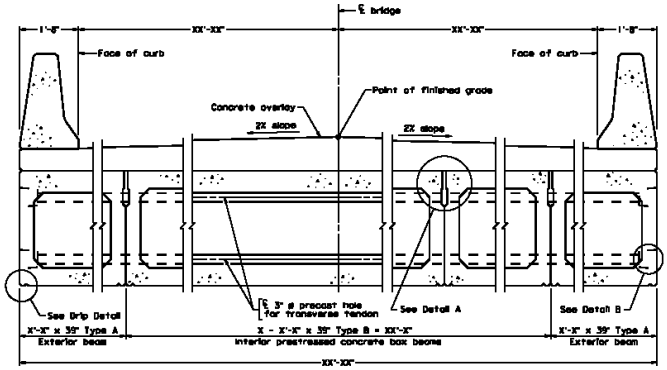


TRANSVERSE SECTION

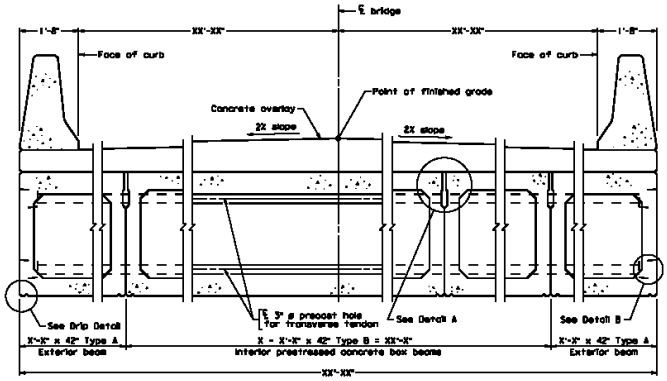


TRANSVERSE SECTION

| CELL | CELL NAME | CELL DESCRIPTION |
|---|---|---|
| | **BV2TSCS3** | Transverse Section; concrete overlay; sloped beams; 3'-0" width; Use with standard PBV-2B. |

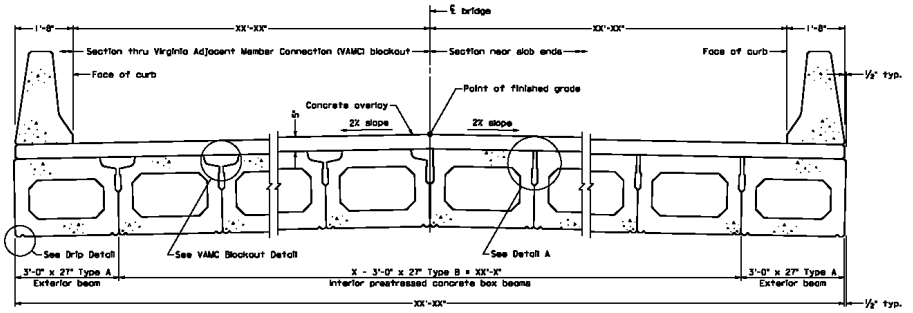


TRANSVERSE SECTION

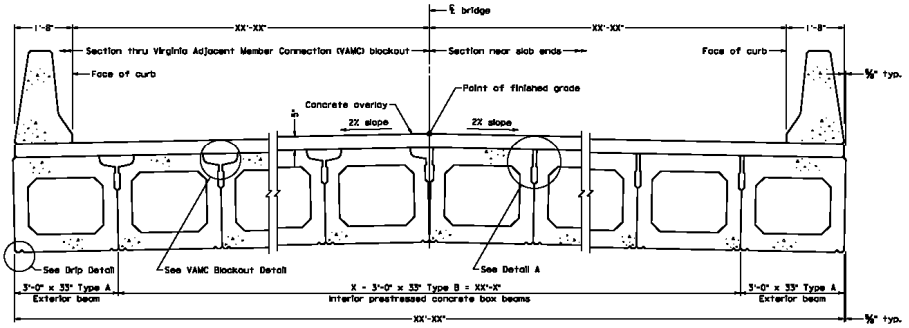


TRANSVERSE SECTION

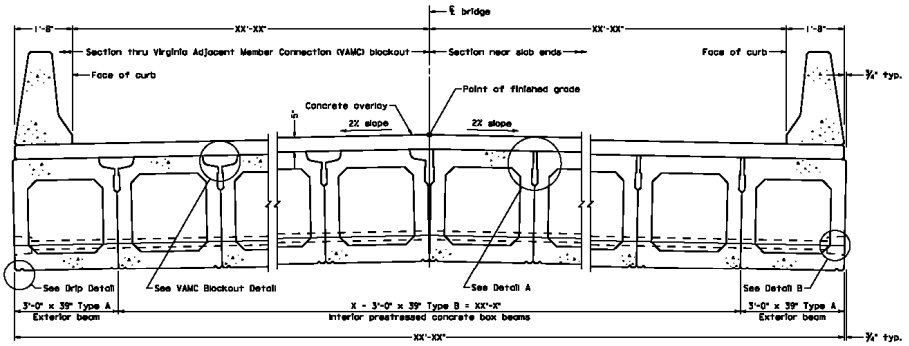


TRANSVERSE SECTION

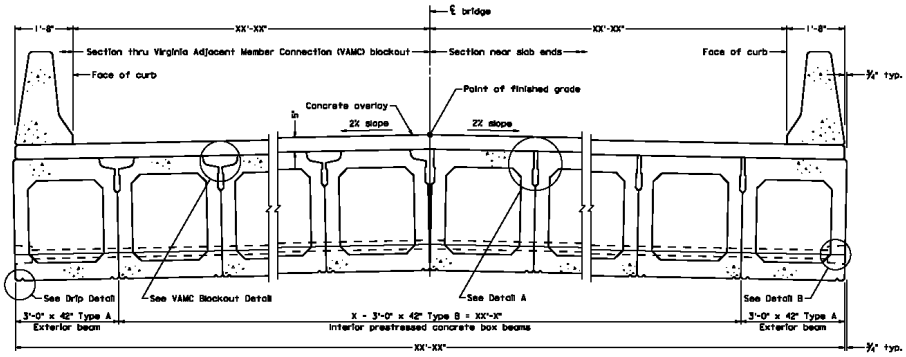


TRANSVERSE SECTION

| CELL | CELL NAME | CELL DESCRIPTION |
|---|---|---|
| | **BV2TSCS4** | Transverse Section; concrete overlay; sloped beams; 4’-0” width; Use with standard PBV-2B. |

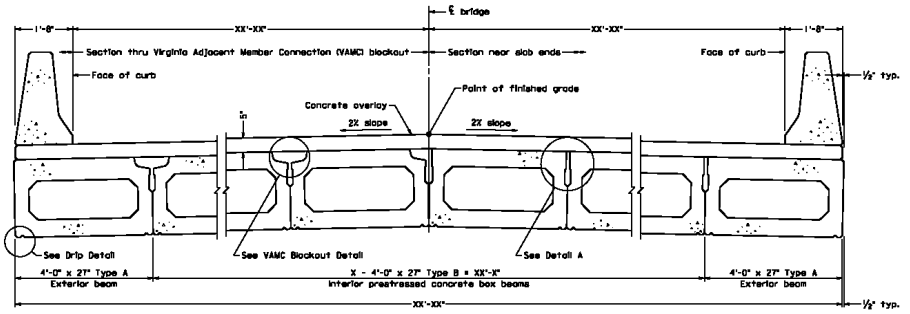


TRANSVERSE SECTION

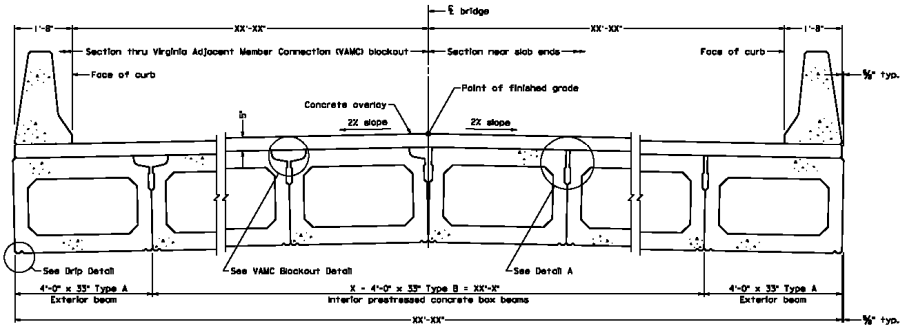


TRANSVERSE SECTION

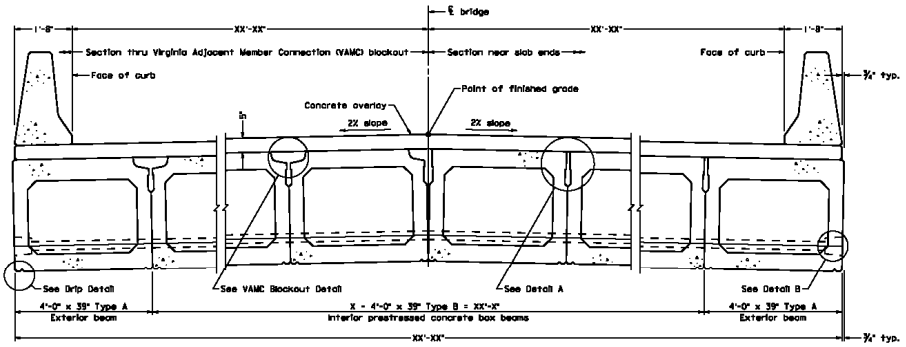


TRANSVERSE SECTION

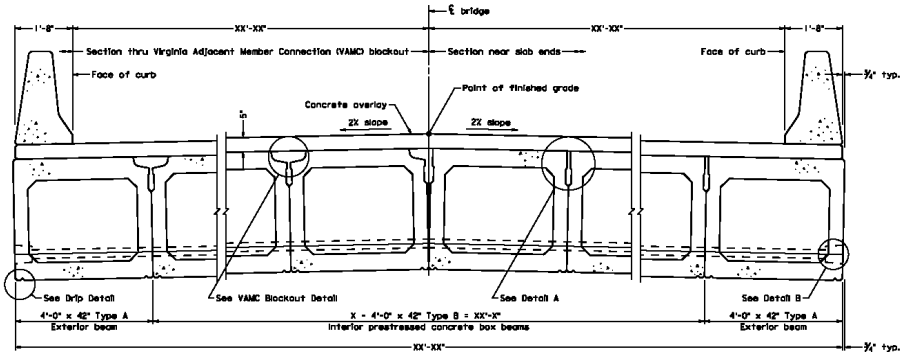


TRANSVERSE SECTION

| CELL | CELL NAME | CELL DESCRIPTION |
| --- | --- | --- |
| | **BV2TYPS3** | Typical Sections; 3'-0" x 27" / 33" / 39" / 42"<br>Use with standard PBV-2A and PBV-2B. |

| CELL | CELL NAME | CELL DESCRIPTION |
|---|---|---|
| | **BV2TYPS4** | Typical Sections; 4’-0” x 27” / 33” / 39” / 42”;<br>Use with standard PBV-2A and PBV-2B. |

| CELL | CELL NAME | CELL DESCRIPTION |
|---|---|---|
| | **BV3ANCHD** | Anchor Detail and Alternate Anchor Detail<br>Use with standard PBV-3. |

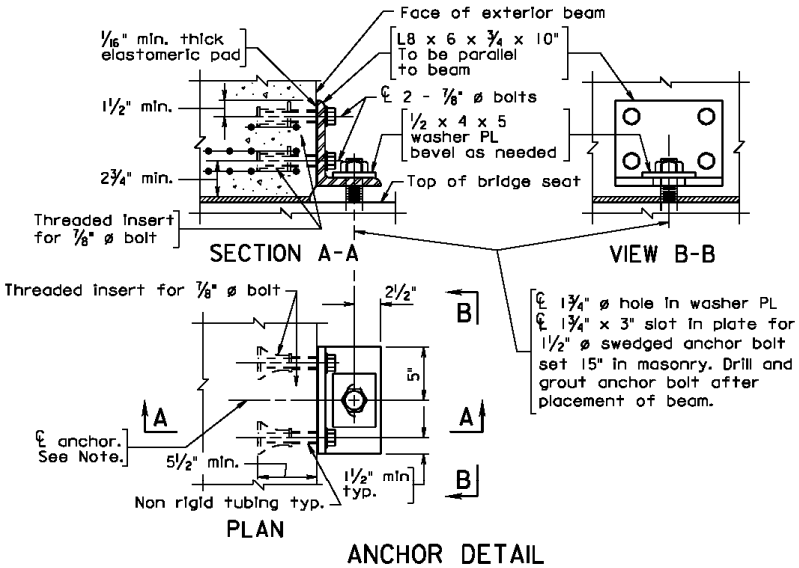


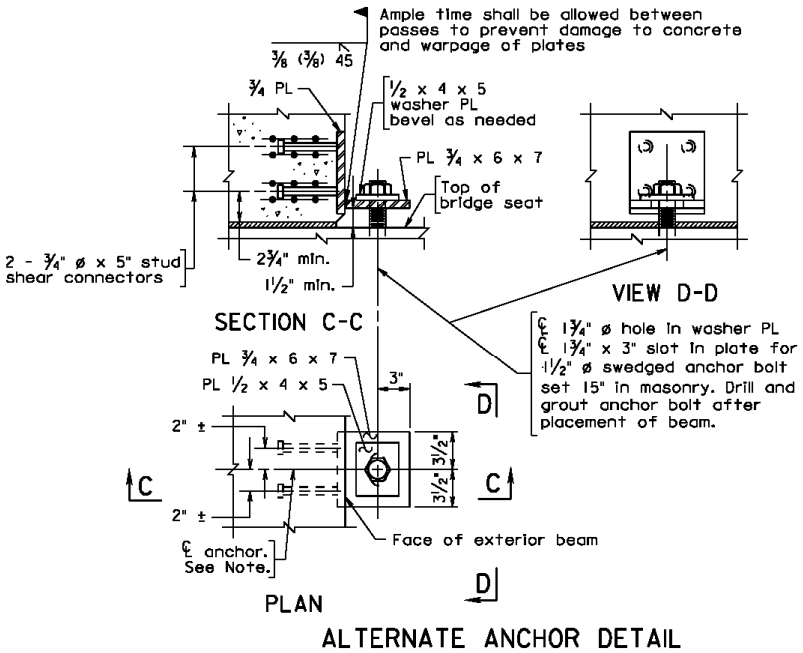


Notes:

All steel in Anchor Detail except stud shear connectors shall be ASTM A709 grade 36 and shall be galvanized.

℄ Anchor may be shifted as approved by the Engineer to provide minimum concrete cover of 2" for threaded inserts or stud shear connectors.

Threaded inserts when embedded as shown shall develop full strength strength of 7/8" ø threaded bolt.

| CELL | CELL NAME | CELL DESCRIPTION |
|---|---|---|
| | **BV3ELEV0** | Elevation; 0° skew; 27” / 33” / 39” / 42”<br>Use with standard PBV-3. |

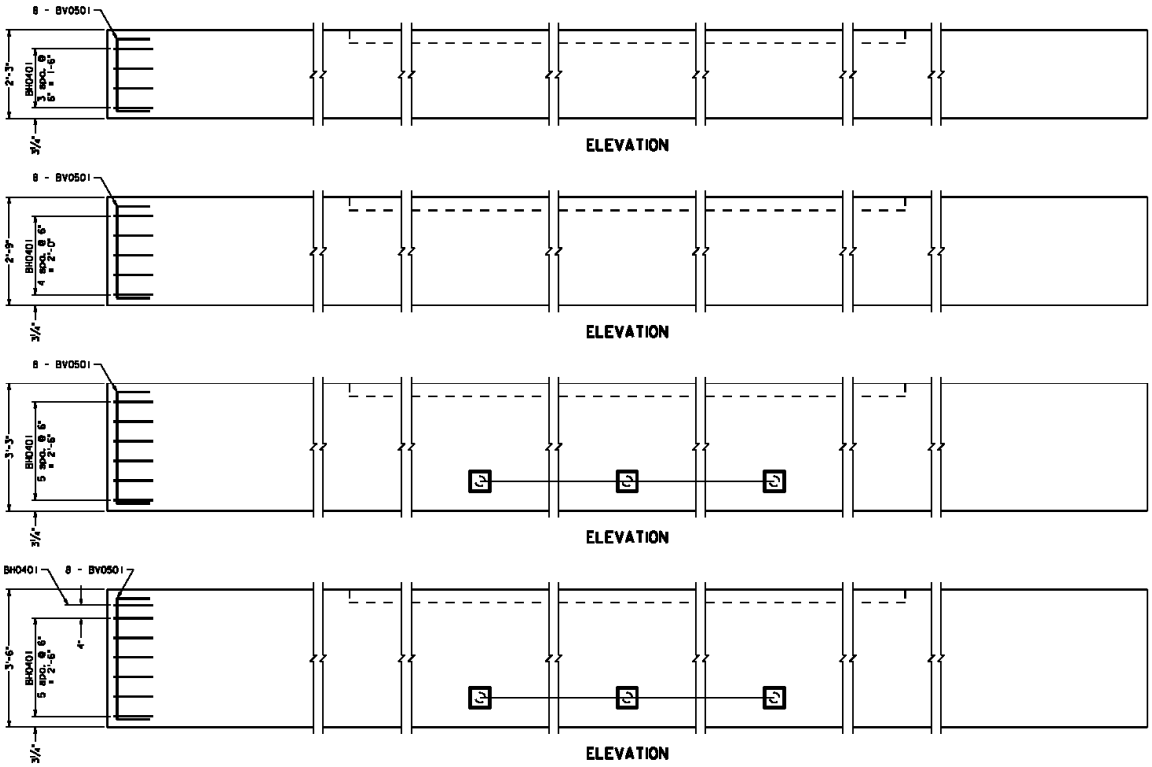

| CELL | CELL NAME | CELL DESCRIPTION |
|---|---|---|
| | **BV3PLANB** | Plan; 0° skew; both 3'-0" and 4'-0" widths<br>Use with standard PBV-3. |

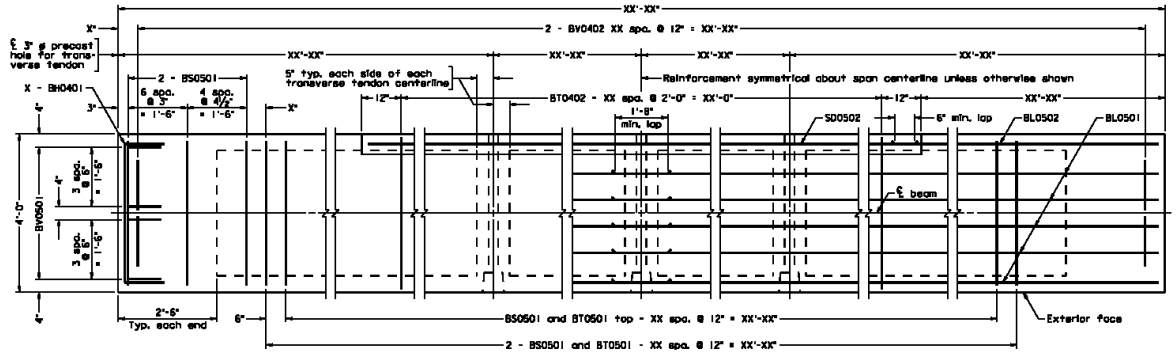


PLAN

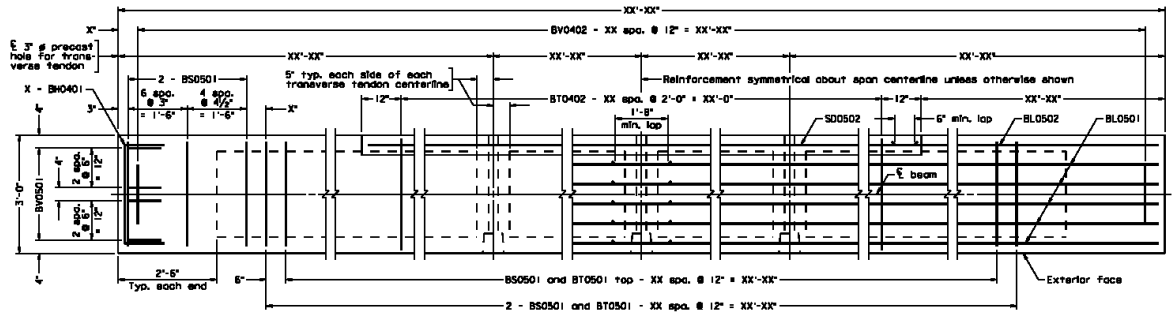


PLAN

| CELL | CELL NAME | CELL DESCRIPTION |
|---|---|---|
| | **BV3SPRD3** | Strand Pattern; Reinforcing Details; 3'-0" width<br>Use with standard PBV-3. |

| CELL | CELL NAME | CELL DESCRIPTION |
|---|---|---|
| | **BV3SPRD4** | Strand Pattern; Reinforcing Details; 4’-0” width<br>Use with standard PBV-3. |

| CELL | CELL NAME | CELL DESCRIPTION |
|---|---|---|
| | **BV34GRAD** | Beams on Gradient in Excess of 1%<br>Use with standards PBV-3 and -4. |

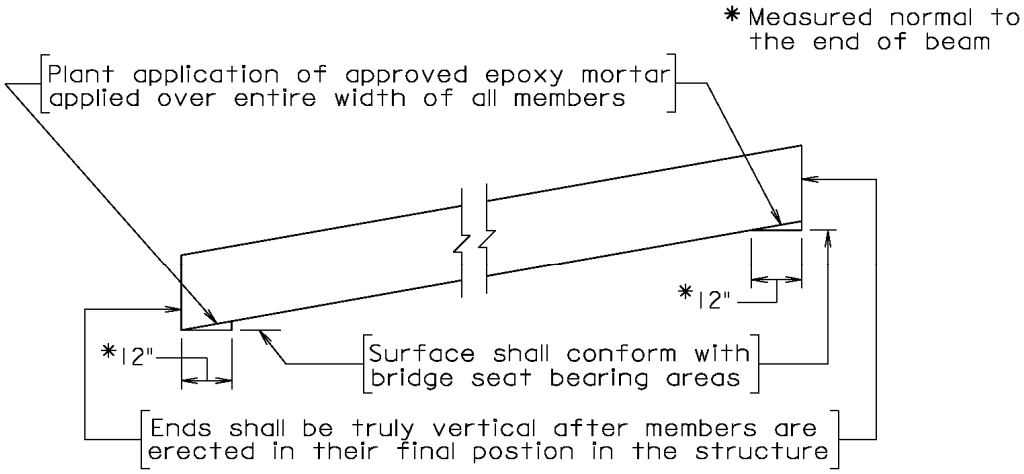


BEAMS ON GRADIENT IN EXCESS OF 1%

| CELL | CELL NAME | CELL DESCRIPTION |
|---|---|---|
| | **BV4ELEV0** | Elevation; 0° skew; 27” / 33” / 39” /42”<br>Use with standard PBV-4. |

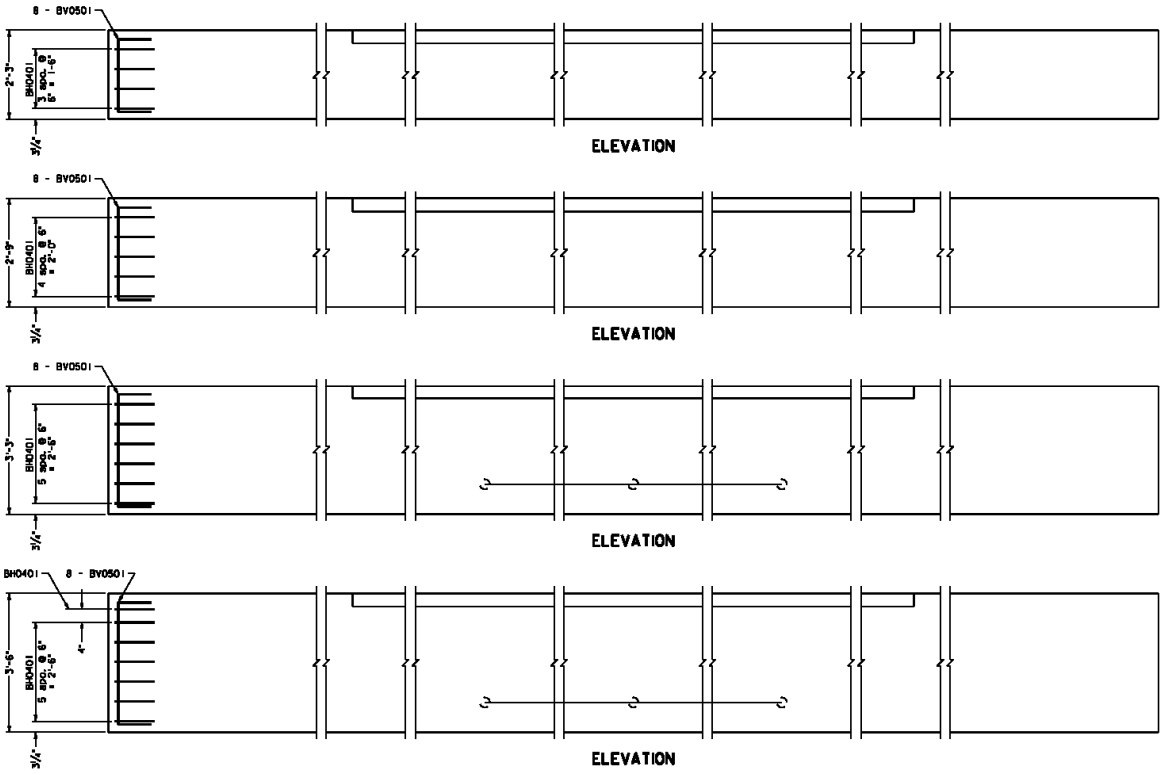

| CELL | CELL NAME | CELL DESCRIPTION |
|---|---|---|
| | **BV4PLANB** | Plan; 0° skew; both 3'-0" and 4'-0" widths<br>Use with standard PBV-4. |

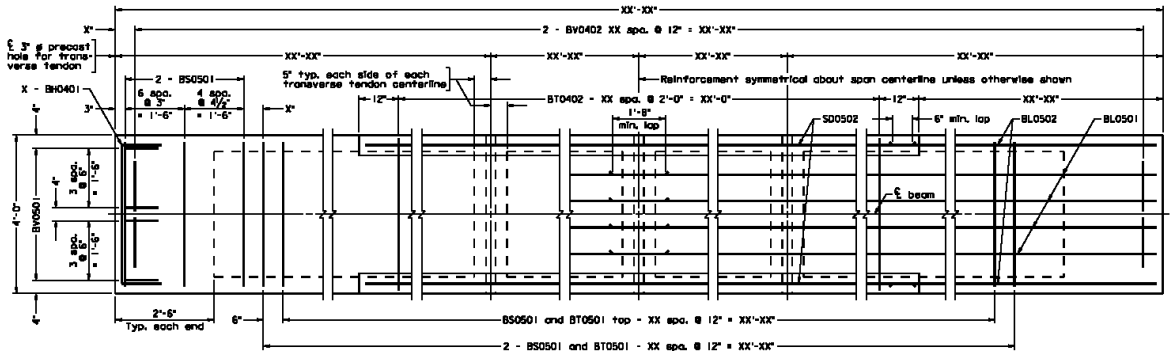


PLAN

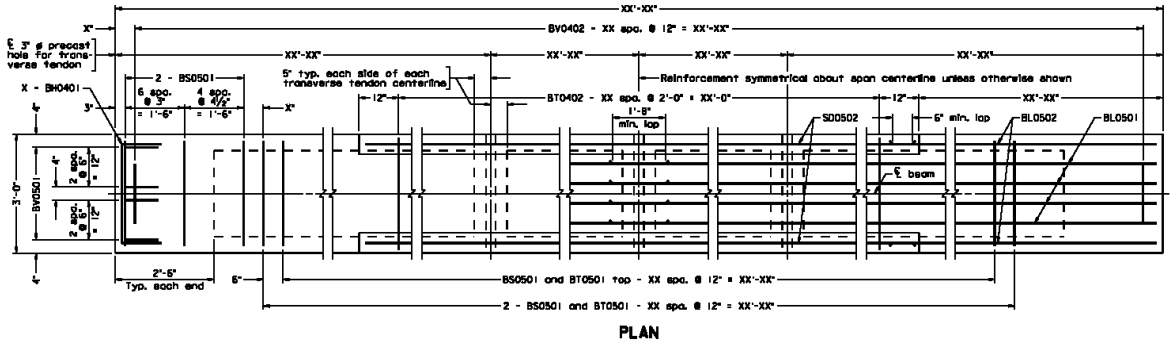


PLAN

| CELL | CELL NAME | CELL DESCRIPTION |
|---|---|---|
| | **BV4SPRD3** | Strand Pattern; Reinforcing Details; 3'-0" width<br>Use with standard PBV-4. |

| CELL | CELL NAME | CELL DESCRIPTION |
|---|---|---|
| | **BV4SPRD4** | Strand Pattern; Reinforcing Details; 4'-0: width<br>Use with standard PBV-4. |

| CELL | CELL NAME | CELL DESCRIPTION |
|---|---|---|
| | **BV5STRAI** | Section Thru Rail<br>Use with standard PBV-5. |

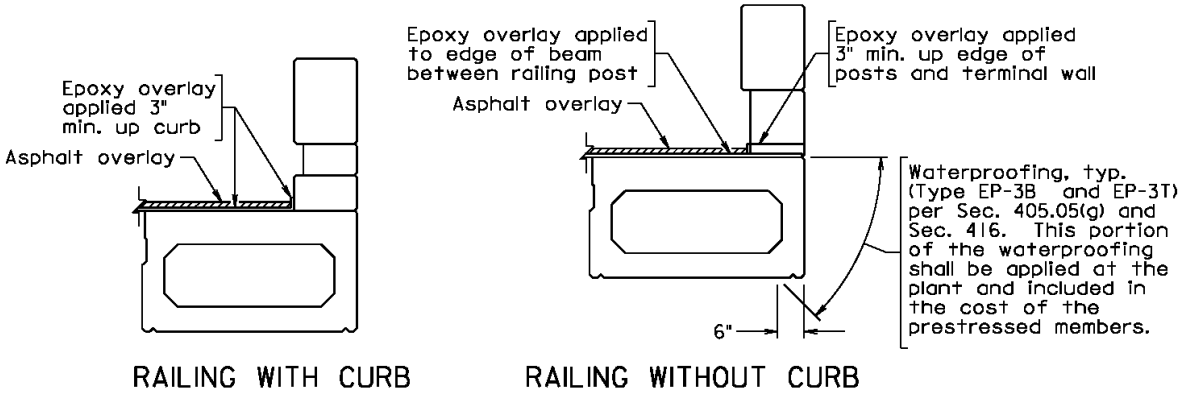


RAILING WITH CURB RAILING WITHOUT CURB

SECTION THRU RAIL

Scale: ½" = 1'-0"
(for asphalt overlay)

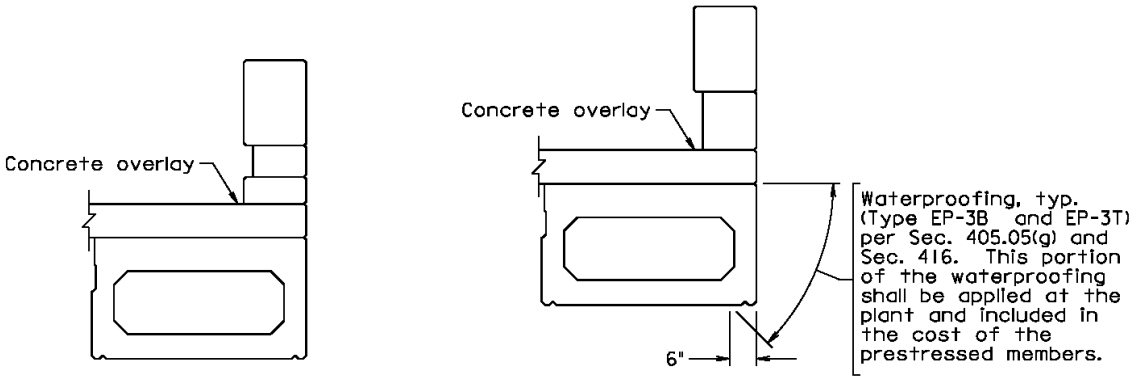


RAILING WITH CURB RAILING WITHOUT CURB

SECTION THRU RAIL

Scale: ½" = 1'-0"
(for concrete overlay)