CAST-IN-PLACE CONCRETE SLAB SPANS
CELL LIBRARY: CS.CEL

INDEX OF CELLS

CELL NAME	FILE NO.	DATE
BS	CSCELLS-1	11Jul2008
BSA	CSCELLS-1	11Jul2008
P1004	CSCELLS-2	11Jul2008
P1005	CSCELLS-2	11Jul2008
P1006	CSCELLS-2	11Jul2008
P1007	CSCELLS-3	11Jul2008
P1008	CSCELLS-3	11Jul2008
P1009	CSCELLS-3	11Jul2008
P1010	CSCELLS-4	11Jul2008
P1011	CSCELLS-4	11Jul2008
P1012	CSCELLS-5	11Jul2008
P1013	CSCELLS-5	11Jul2008
P1014	CSCELLS-6	11Jul2008
P1304	CSCELLS-6	11Jul2008
P1305	CSCELLS-7	11Jul2008
P1306	CSCELLS-7	11Jul2008
P1307	CSCELLS-8	11Jul2008
P1308	CSCELLS-8	11Jul2008
P1309	CSCELLS-9	11Jul2008
P1310	CSCELLS-9	11Jul2008
P1311	CSCELLS-10	11Jul2008
P1312	CSCELLS-10	11Jul2008
P1313	CSCELLS-11	11Jul2008
P1314	CSCELLS-11	11Jul2008
P1404	CSCELLS-12	11Jul2008
P1405	CSCELLS-12	11Jul2008
P1406	CSCELLS-13	11Jul2008
P1407	CSCELLS-13	11Jul2008
P1408	CSCELLS-14	11Jul2008
P1409	CSCELLS-14	11Jul2008
P1410	CSCELLS-15	11Jul2008
P1411	CSCELLS-15	11Jul2008
P1412	CSCELLS-16	11Jul2008
P1413	CSCELLS-16	11Jul2008
P1414	CSCELLS-17	11Jul2008
P2004	CSCELLS-17	11Jul2008
P2005	CSCELLS-18	11Jul2008
P2006	CSCELLS-18	11Jul2008
P2007	CSCELLS-18	11Jul2008
P2008	CSCELLS-19	11Jul2008
P2009	CSCELLS-19	11Jul2008
P2010	CSCELLS-19	11Jul2008
P2011	CSCELLS-20	11Jul2008

CAST-IN-PLACE CONCRETE SLAB SPANS
CELL LIBRARY: CS.CEL

INDEX OF CELLS (CONT'D)

CELL NAME	FILE NO.	DATE
P2012	CSCELLS-20	11Jul2008
P2013	CSCELLS-21	11Jul2008
P2014	CSCELLS-21	11Jul2008
P2304	CSCELLS-22	11Jul2008
P2305	CSCELLS-22	11Jul2008
P2306	CSCELLS-23	11Jul2008
P2307	CSCELLS-23	11Jul2008
P2308	CSCELLS-24	11Jul2008
P2309	CSCELLS-24	11Jul2008
P2310	CSCELLS-25	11Jul2008
P2311	CSCELLS-25	11Jul2008
P2312	CSCELLS-26	11Jul2008
P2313	CSCELLS-26	11Jul2008
P2314	CSCELLS-27	11Jul2008
P2404	CSCELLS-27	11Jul2008
P2405	CSCELLS-28	11Jul2008
P2406	CSCELLS-28	11Jul2008
P2407	CSCELLS-29	11Jul2008
P2408	CSCELLS-29	11Jul2008
P2409	CSCELLS-30	11Jul2008
P2410	CSCELLS-30	11Jul2008
P2411	CSCELLS-31	11Jul2008
P2412	CSCELLS-31	11Jul2008
P2413	CSCELLS-32	11Jul2008
P2414	CSCELLS-32	11Jul2008
PL0	CSCELLS-33	11Jul2008
PL30L	CSCELLS-33	11Jul2008
PL30R	CSCELLS-34	11Jul2008
PL45L	CSCELLS-34	11Jul2008
PL45R	CSCELLS-35	11Jul2008
PP01	CSCELLS-35	11Jul2008
PP02	CSCELLS-36	11Jul2008
PT1	CSCELLS-36	11Jul2008
PT1A	CSCELLS-37	11Jul2008
PT2	CSCELLS-37	11Jul2008
PT2A	CSCELLS-38	11Jul2008
PT3	CSCELLS-38	11Jul2008
PT3A	CSCELLS-39	11Jul2008
PT4	CSCELLS-39	11Jul2008
PT4A	CSCELLS-40	11Jul2008

CELL	CELL NAME	CELL DESCRIPTION

BS

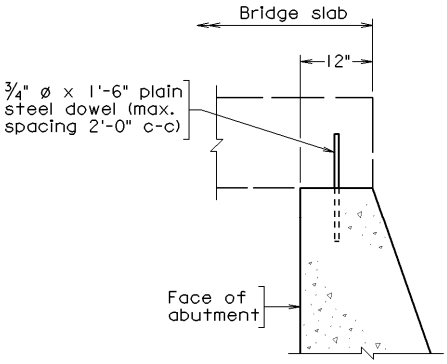

TYPICAL BRIDGE SEATS

Typical Bridge Seats
No approach slab
(approx. 0.50 of actual cell size)

BSA

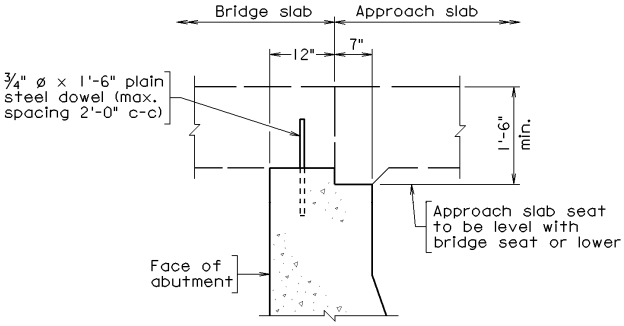

TYPICAL BRIDGE AND APPROACH SLAB SEATS

Typical Bridge Seats
With approach slab
(approx. 0.45 of actual cell size)

CELL	CELL NAME	CELL DESCRIPTION

P1004

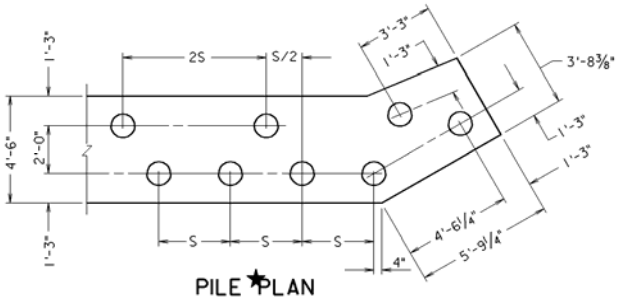

Abutment on Piles Pile Plan
0° Skew – Fill Slope 1 ½ : 1 - H = 4'
S = 3'-0" to 3'-6"
(approx. 0.45 of actual cell size)

P1005

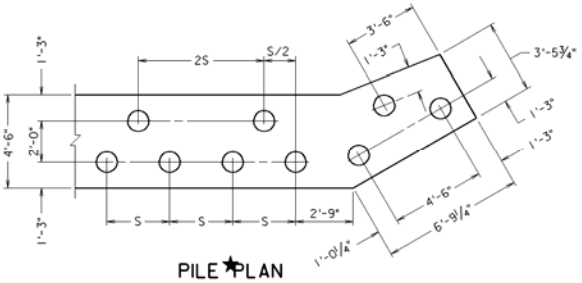

Abutment on Piles Pile Plan
0° Skew – Fill Slope 1 ½ : 1 - H = 5'
S = 3'-0" to 3'-6"
(approx. 0.35 of actual cell size)

P1006

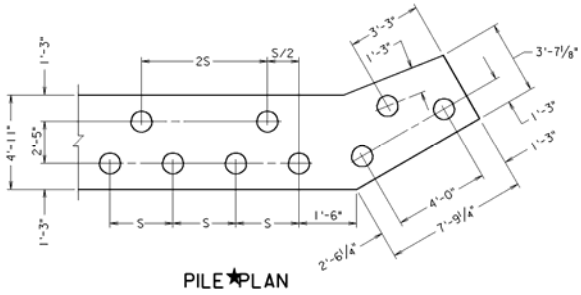

Abutment on Piles Pile Plan
0° Skew – Fill Slope 1 ½ : 1 - H = 6'
S = 3'-0" to 3'-6"
(approx. 0.35 of actual cell size)

CELL	CELL NAME	CELL DESCRIPTION

P1007

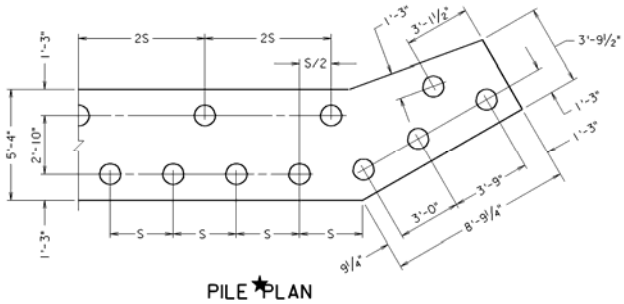

Abutment on Piles Pile Plan
0° Skew – Fill Slope 1 ½ : 1 - H = 7'
S = 2'-9" to 3'-3"
(approx. 0.35 of actual cell size)

P1008

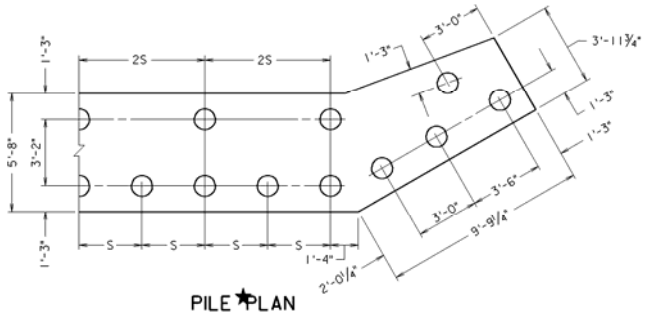

Abutment on Piles Pile Plan
0° Skew – Fill Slope 1 ½ : 1 - H = 8'
S = 2'-9" to 3'-3"
(approx. 0.35 of actual cell size)

P1009

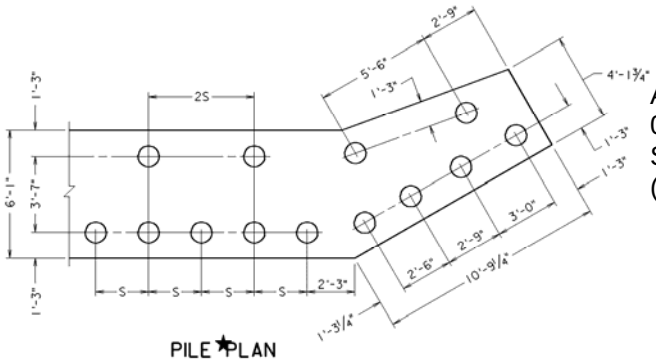

Abutment on Piles Pile Plan
0° Skew – Fill Slope 1 ½ : 1 - H = 9'
S = 2'-6" to 2'-9"
(approx. 0.35 of actual cell size)

CELL	CELL NAME	CELL DESCRIPTION

P1010

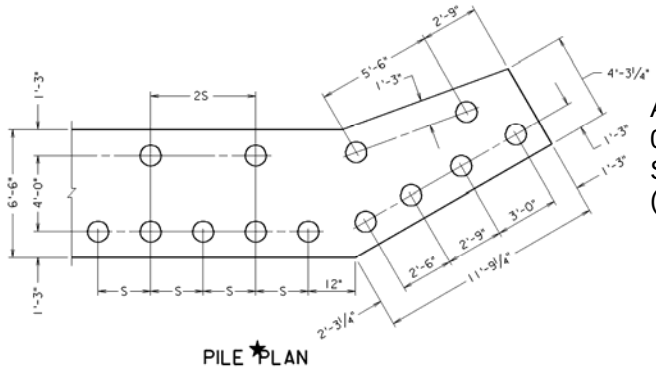

Abutment on Piles Pile Plan
0° Skew – Fill Slope 1 ½ : 1 - H = 10'
S = 2'-6" to 2'-8"
(approx. 0.35 of actual cell size)

P1011

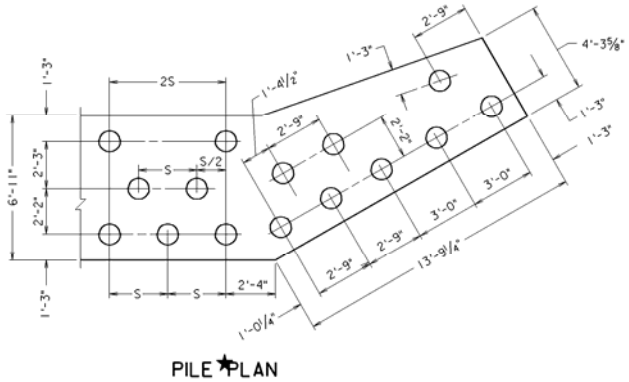

Abutment on Piles Pile Plan
0° Skew – Fill Slope 1 ½ : 1 - H = 11'
S = 2'-9" to 3'-0"
(approx. 0.35 of actual cell size)

CELL	CELL NAME	CELL DESCRIPTION

P1012

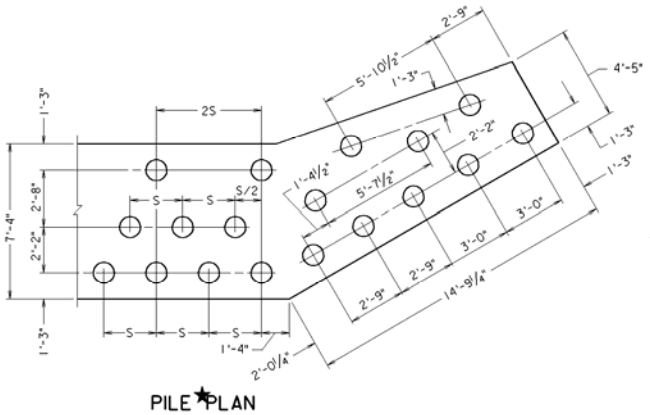

Abutment on Piles Pile Plan
0° Skew – Fill Slope 1 ½ : 1 - H = 12'
S = 2'-6" to 2'-9"
(approx. 0.35 of actual cell size)

P1013

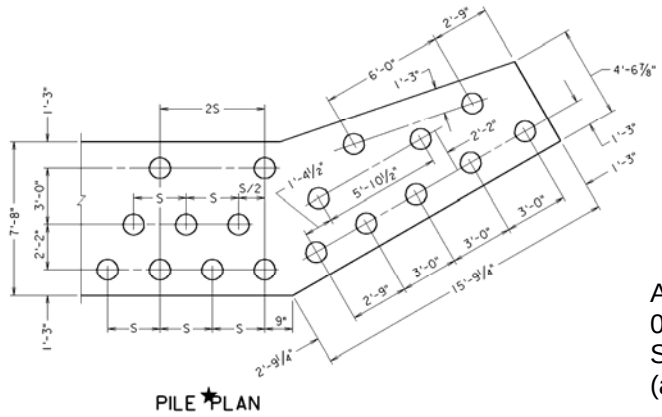

Abutment on Piles Pile Plan
0° Skew – Fill Slope 1 ½ : 1 - H = 13'
S = 2'-6" to 2'-9"
(approx. 0.35 of actual cell size)

CELL	CELL NAME	CELL DESCRIPTION

P1014

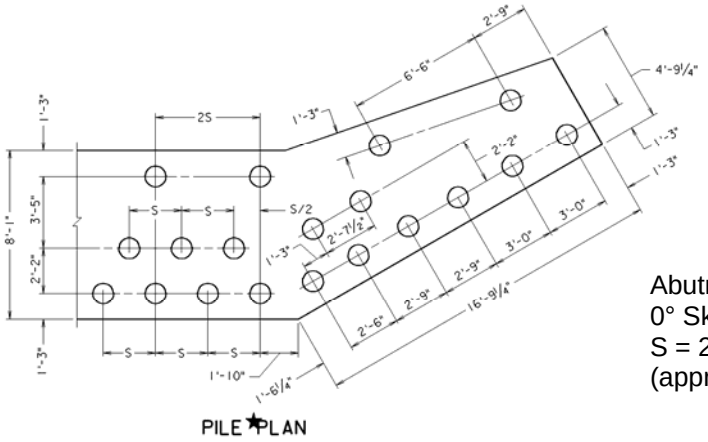

Abutment on Piles Pile Plan
0° Skew – Fill Slope 1 ½ : 1 - H = 12'
S = 2'-6" to 2'-8"
(approx. 0.35 of actual cell size)

P1304

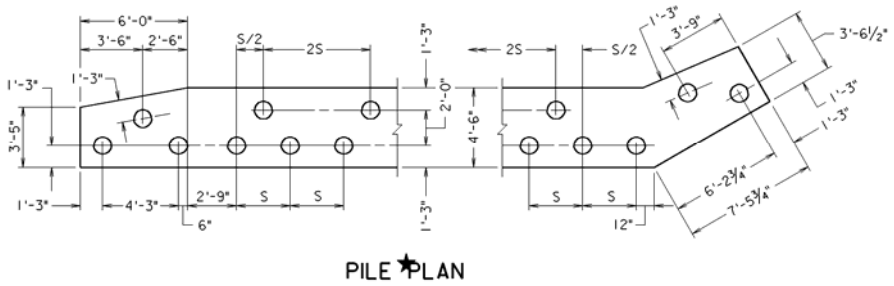

Abutment on Piles Pile Plan
30° Skew – Fill Slope 1 ½ : 1 - H = 4'
S = 3'-0" to 3'-6"
(approx. 0.40 of actual cell size)

CELL	CELL NAME	CELL DESCRIPTION

P1305

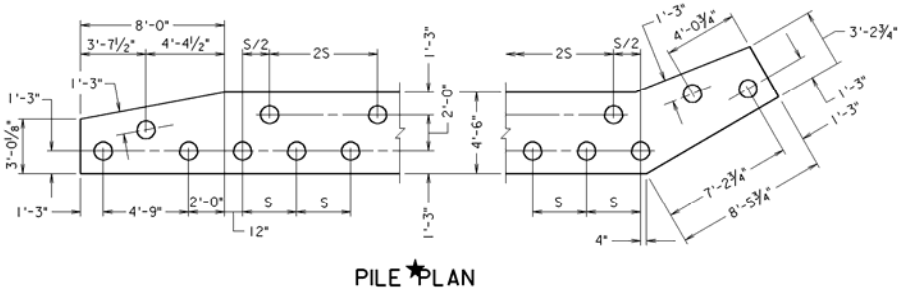

Abutment on Piles Pile Plan
30° Skew – Fill Slope 1 ½ : 1 - H = 5'
S = 3'-0" to 3'-6"
(approx. 0.40 of actual cell size)

P1306

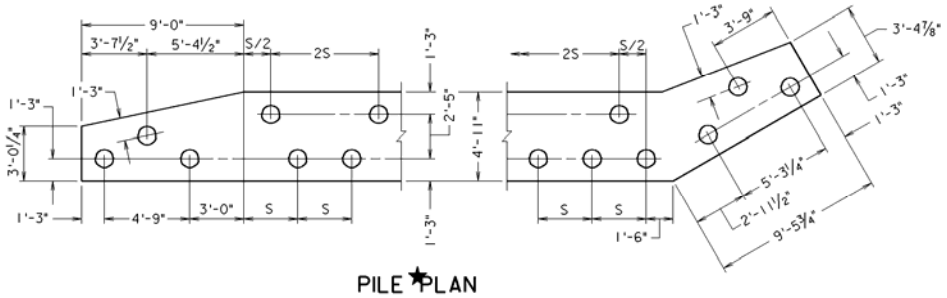

Abutment on Piles Pile Plan
30° Skew – Fill Slope 1 ½ : 1 - H = 6'
S = 3'-0" to 3'-6"
(approx. 0.40 of actual cell size)

CELL	CELL NAME	CELL DESCRIPTION

P1307

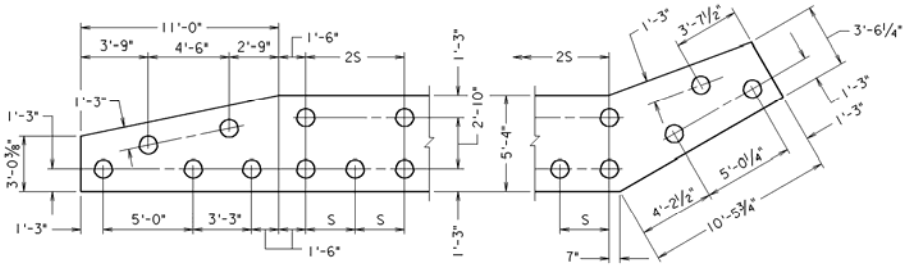

PILE PLAN

Abutment on Piles Pile Plan
30° Skew – Fill Slope 1 ½ : 1 - H = 7'
S = 2'-9" to 3'-3"
(approx. 0.40 of actual cell size)

P1308

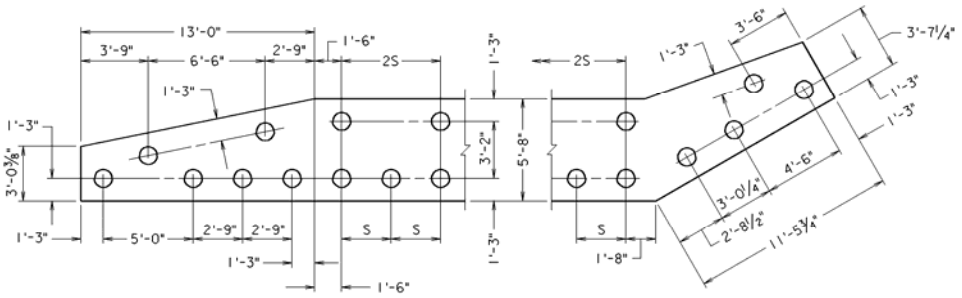

PILE PLAN

Abutment on Piles Pile Plan
30° Skew – Fill Slope 1 ½ : 1 - H = 8'
S = 2'-9" to 3'-0"
(approx. 0.40 of actual cell size)

CELL	CELL NAME	CELL DESCRIPTION

P1309

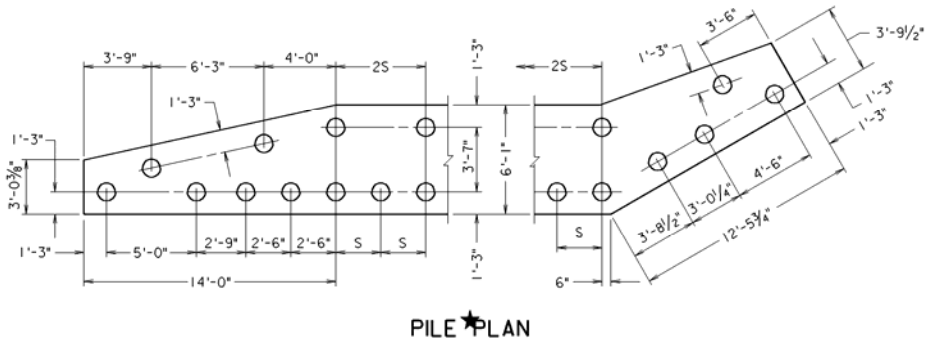

Abutment on Piles Pile Plan
30° Skew – Fill Slope 1 ½ : 1 - H = 9'
S = 2'-6" to 2'-9"
(approx. 0.40 of actual cell size)

P1310

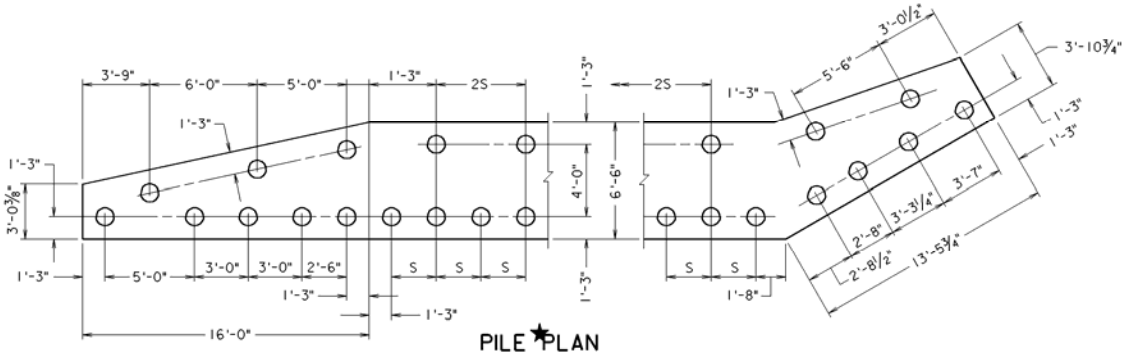

Abutment on Piles Pile Plan
30° Skew – Fill Slope 1 ½ : 1 - H = 10'
S = 2'-6" to 2'-8"
(approx. 0.40 of actual cell size)

CELL	CELL NAME	CELL DESCRIPTION

P1311

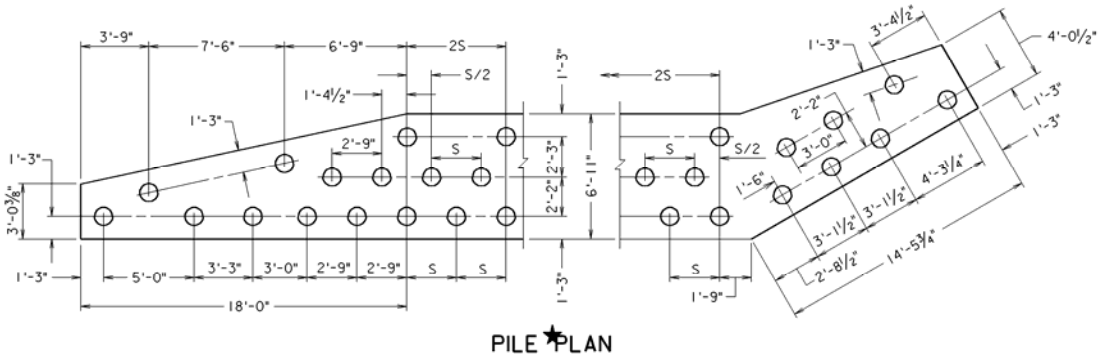

Abutment on Piles Pile Plan
30° Skew – Fill Slope 1 ½ : 1 - H = 11'
S = 2'-9" to 3'-0"
(approx. 0.40 of actual cell size)

P1312

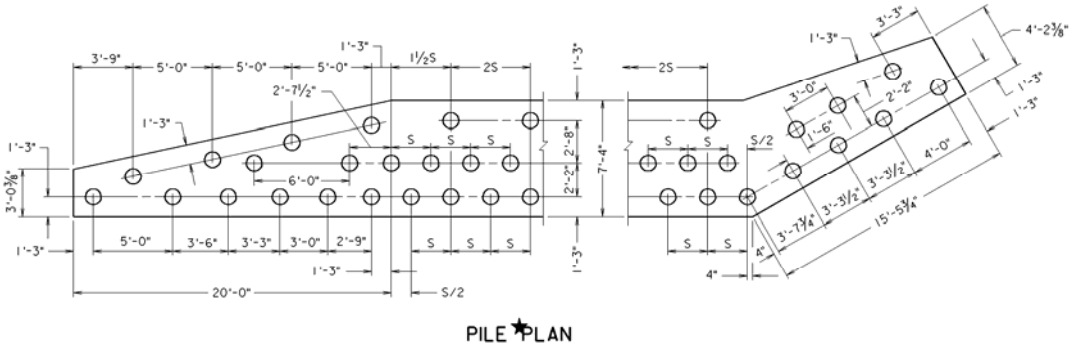

Abutment on Piles Pile Plan
30° Skew – Fill Slope 1 ½ : 1 - H = 12'
S = 2'-6" to 2'-9"
(approx. 0.35 of actual cell size)

CELL	CELL NAME	CELL DESCRIPTION

P1313

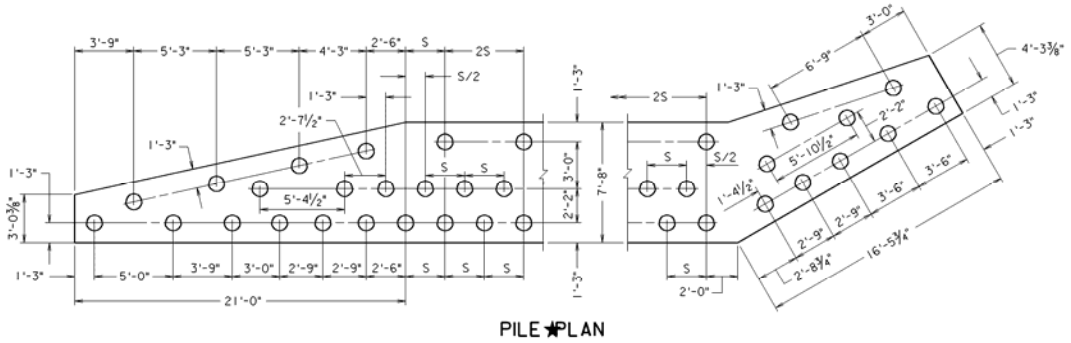

Abutment on Piles Pile Plan
30° Skew – Fill Slope 1 ½ : 1 - H = 13'
S = 2'-6" to 2'-9"
(approx. 0.35 of actual cell size)

P1314

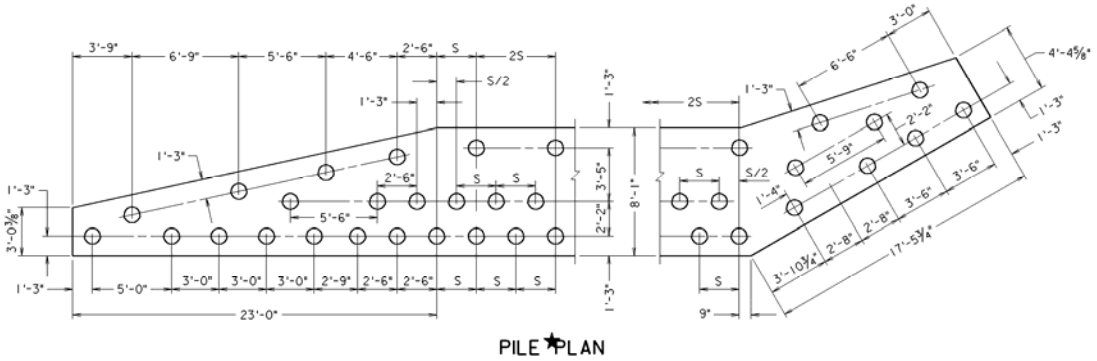

Abutment on Piles Pile Plan
30° Skew – Fill Slope 1 ½ : 1 - H = 14'
S = 2'-6" to 2'-8"
(approx. 0.35 of actual cell size)

CELL	CELL NAME	CELL DESCRIPTION

P1404

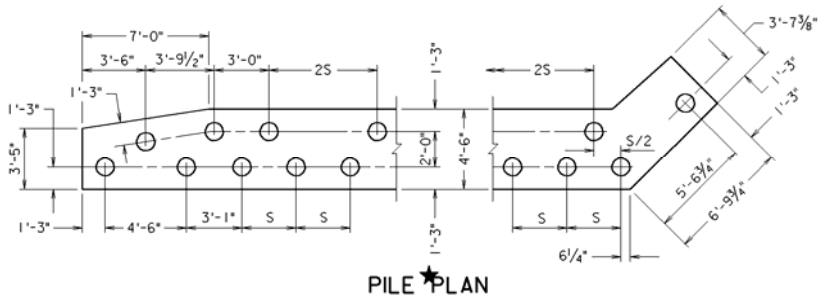

Abutment on Piles Pile Plan
45° Skew – Fill Slope 1 ½ : 1 - H = 4'
S = 3'-0" to 3'-6"
(approx. 0.40 of actual cell size)

P1405

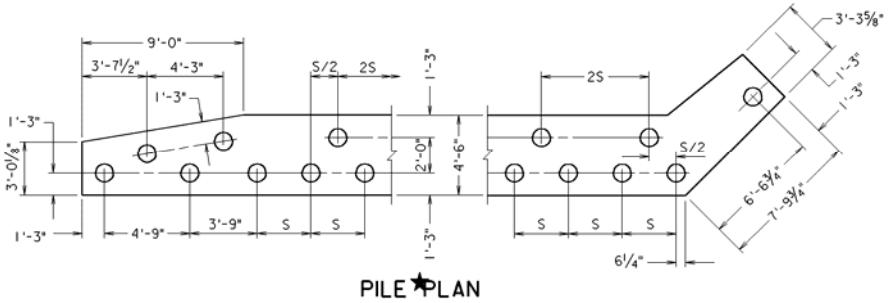

Abutment on Piles Pile Plan
45° Skew – Fill Slope 1 ½ : 1 - H = 5'
S = 3'-0" to 3'-6"
(approx. 0.40 of actual cell size)

CELL	CELL NAME	CELL DESCRIPTION

P1406

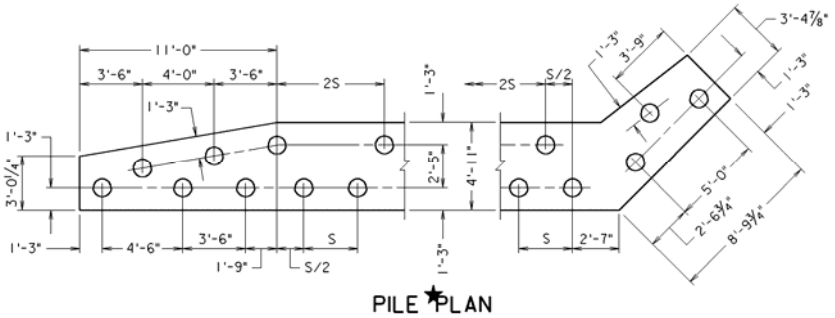

Abutment on Piles Pile Plan
45° Skew – Fill Slope 1 ½ : 1 - H = 6'
S = 3'-0" to 3'-6"
(approx. 0.40 of actual cell size)

P1407

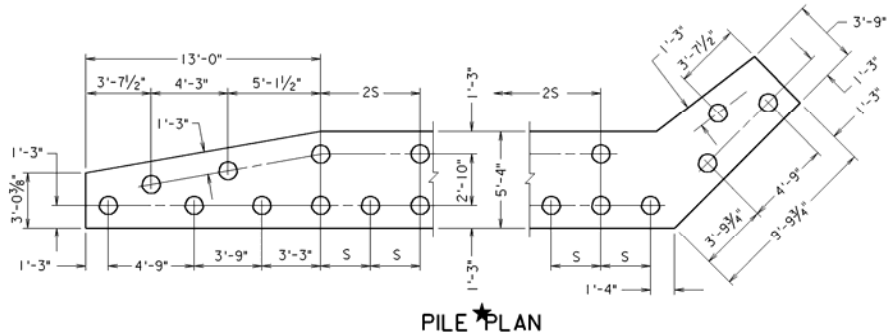

Abutment on Piles Pile Plan
45° Skew – Fill Slope 1 ½ : 1 - H = 7'
S = 2'-9" to 3'-3"
(approx. 0.40 of actual cell size)

CELL	CELL NAME	CELL DESCRIPTION

P1408

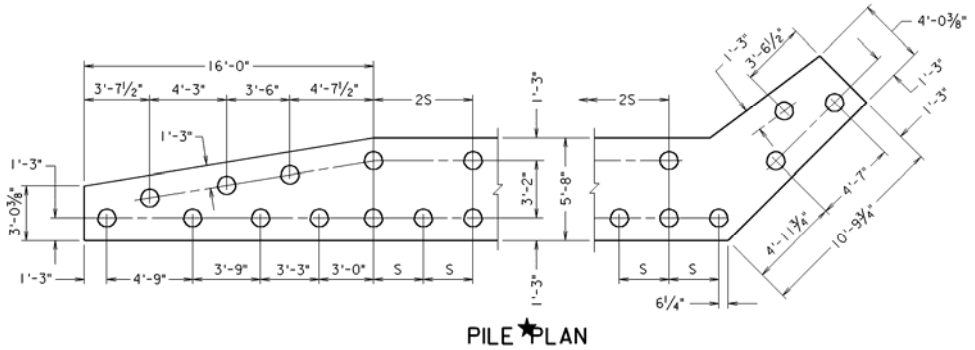

Abutment on Piles Pile Plan
45° Skew – Fill Slope 1 ½ : 1 - H = 8'
S = 2'-9" to 3'-0"
(approx. 0.40 of actual cell size)

P1409

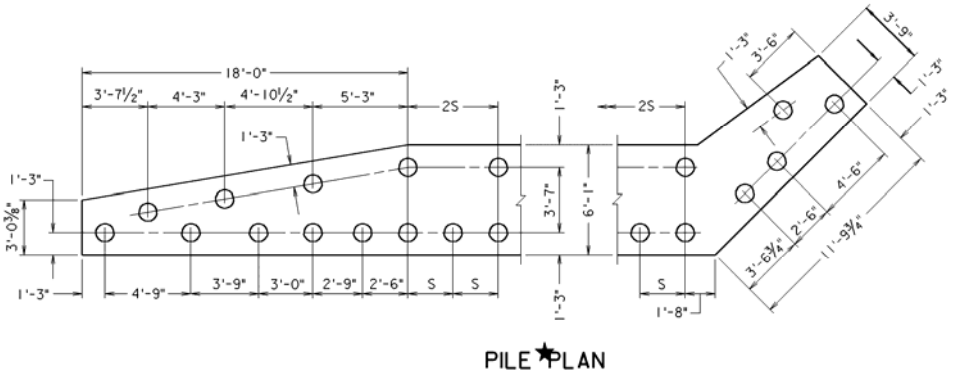

Abutment on Piles Pile Plan
45° Skew – Fill Slope 1 ½ : 1 - H = 9'
S = 2'-6" to 2'-9"
(approx. 0.40 of actual cell size)

CELL	CELL NAME	CELL DESCRIPTION

P1410

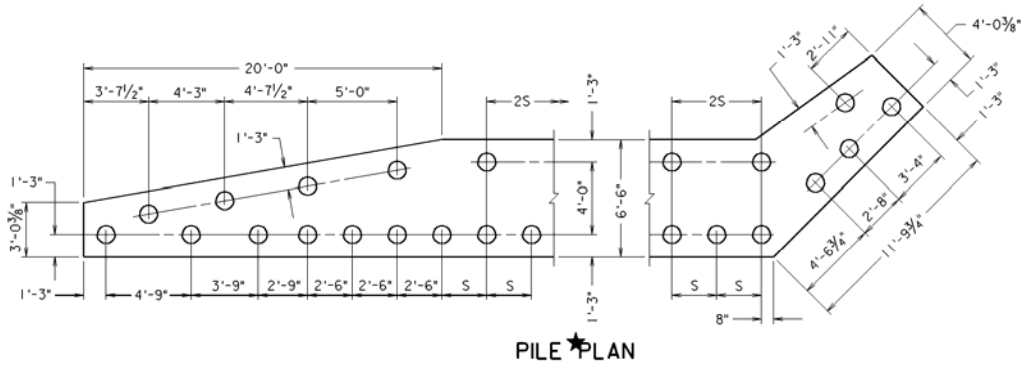

Abutment on Piles Pile Plan
45° Skew – Fill Slope 1 ½ : 1 - H = 10'
S = 2'-9" to 3'-0"
(approx. 0.40 of actual cell size)

P1411

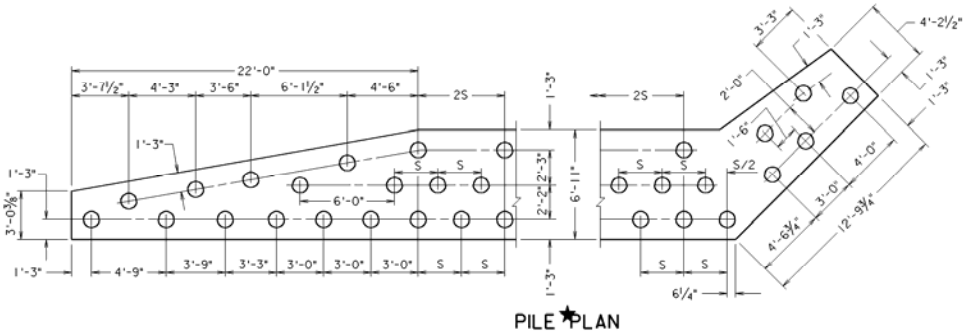

Abutment on Piles Pile Plan
45° Skew – Fill Slope 1 ½ : 1 - H = 11'
S = 2'-9" to 3'-0"
(approx. 0.35 of actual cell size)

CELL	CELL NAME	CELL DESCRIPTION

P1412

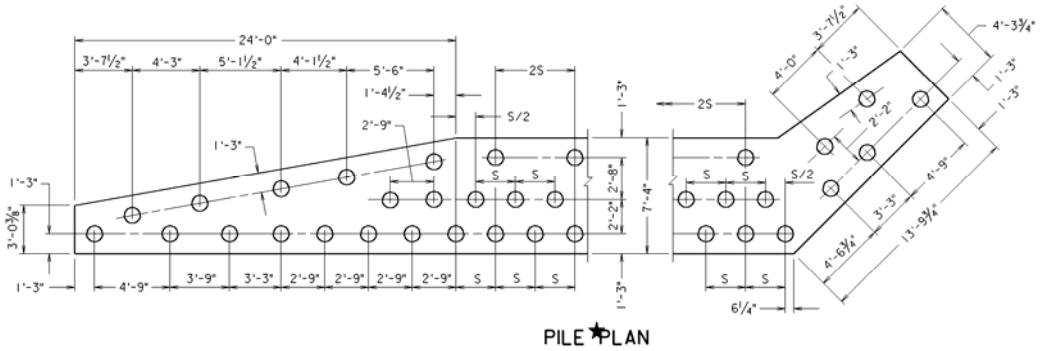

Abutment on Piles Pile Plan
45° Skew – Fill Slope 1 ½ : 1 - H = 12'
S = 2'-6" to 2'-9"
(approx. 0.35 of actual cell size)

P1413

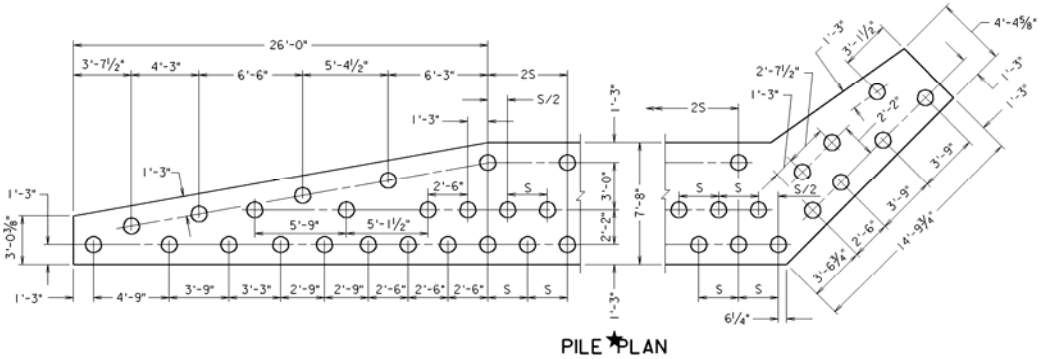

Abutment on Piles Pile Plan
45° Skew – Fill Slope 1 ½ : 1 - H = 13'
S = 2'-6" to 2'-9"
(approx. 0.35 of actual cell size)

CELL	CELL NAME	CELL DESCRIPTION

P1414

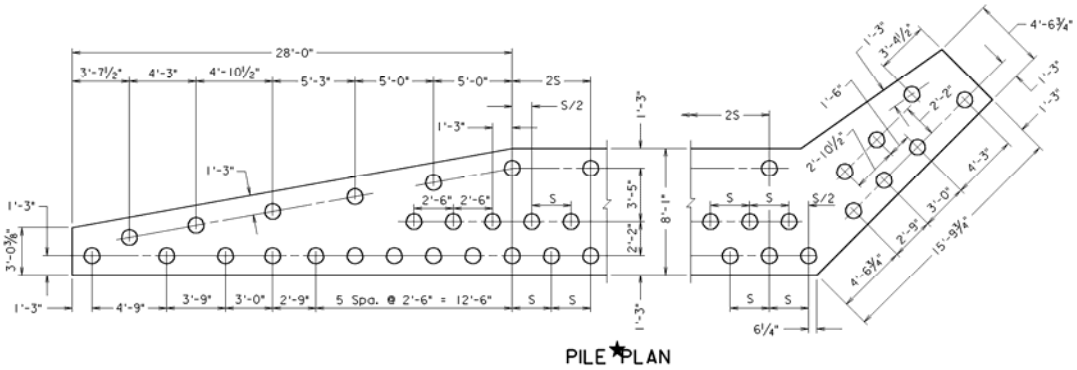

Abutment on Piles Pile Plan
45° Skew – Fill Slope 1 ½ : 1 - H = 14'
S = 2'-6" to 2'-8"
(approx. 0.35 of actual cell size)

P2004

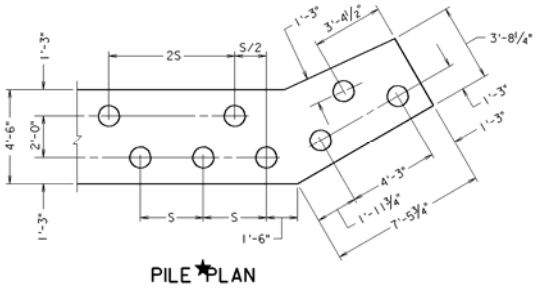

Abutment on Piles Pile Plan
0° Skew – Fill Slope 2 : 1 - H = 4'
S = 3'-0" to 3'-6"
(approx. 0.35 of actual cell size)

CELL	CELL NAME	CELL DESCRIPTION

P2005

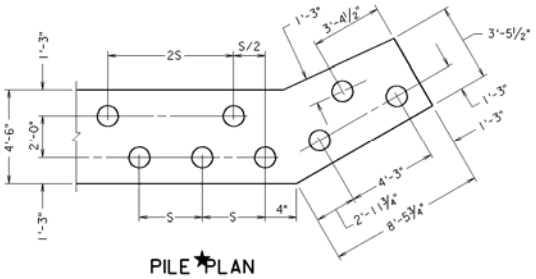

Abutment on Piles Pile Plan
0° Skew – Fill Slope 2 : 1 - H = 5'
S = 3'-0" to 3'-6"
(approx. 0.35 of actual cell size)

P2006

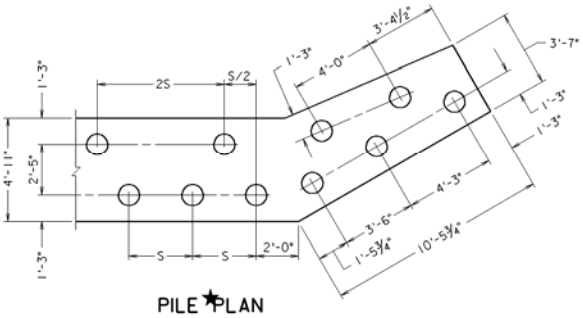

Abutment on Piles Pile Plan
0° Skew – Fill Slope 2 : 1 - H = 6'
S = 3'-0" to 3'-6"
(approx. 0.35 of actual cell size)

P2007

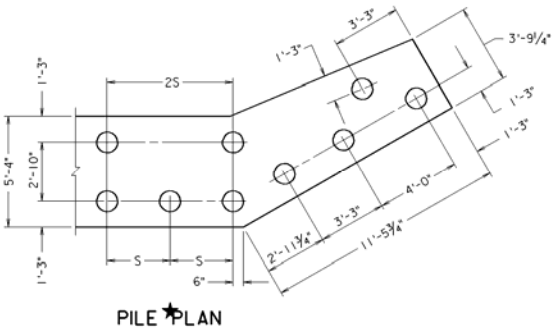

Abutment on Piles Pile Plan
0° Skew – Fill Slope 2 : 1 - H = 7'
S = 2'-9" to 3'-3"
(approx. 0.35 of actual cell size)

CELL	CELL NAME	CELL DESCRIPTION

P2008

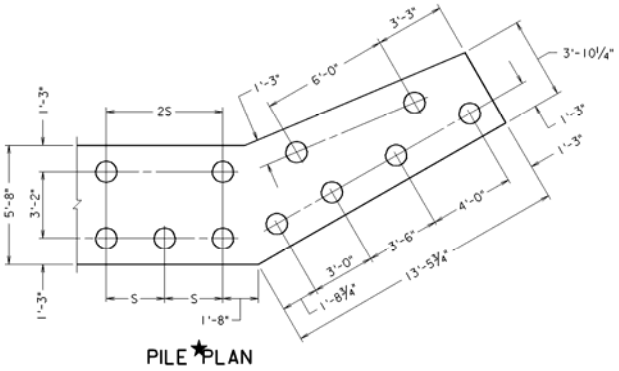

Abutment on Piles Pile Plan
0° Skew – Fill Slope 2 : 1 - H = 8'
S = 2'-9" to 3'-0"
(approx. 0.35 of actual cell size)

P2009

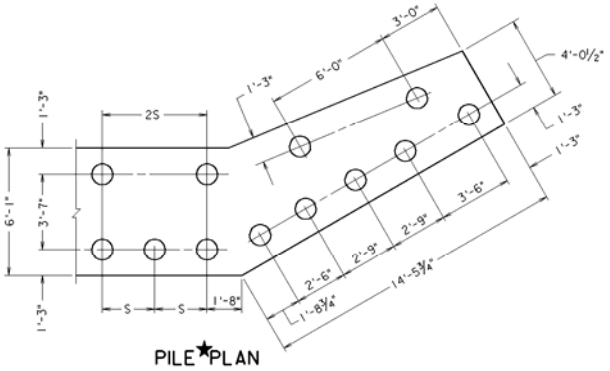

Abutment on Piles Pile Plan
0° Skew – Fill Slope 2 : 1 - H = 9'
S = 2'-6" to 2'-9"
(approx. 0.35 of actual cell size)

P2010

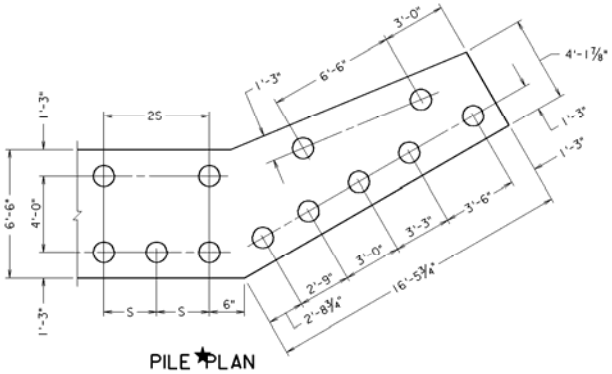

Abutment on Piles Pile Plan
0° Skew – Fill Slope 2 : 1 - H = 10'
S = 2'-6" to 2'-8"
(approx. 0.35 of actual cell size)

CELL	CELL NAME	CELL DESCRIPTION

P2011

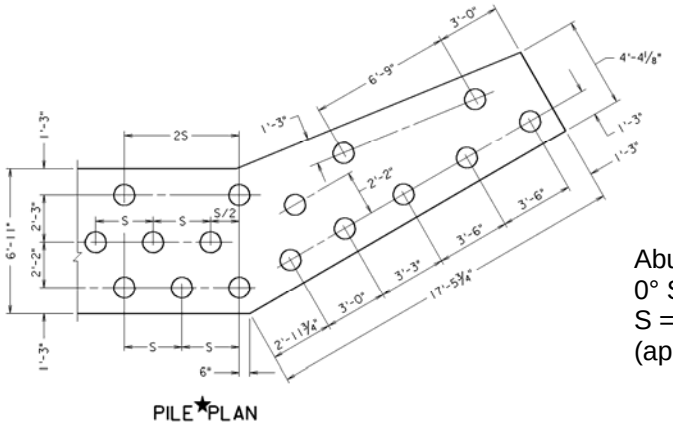

Abutment on Piles Pile Plan
0° Skew – Fill Slope 2 : 1 - H = 11'
S = 2'-9" to 3'-0"
(approx. 0.35 of actual cell size)

P2012

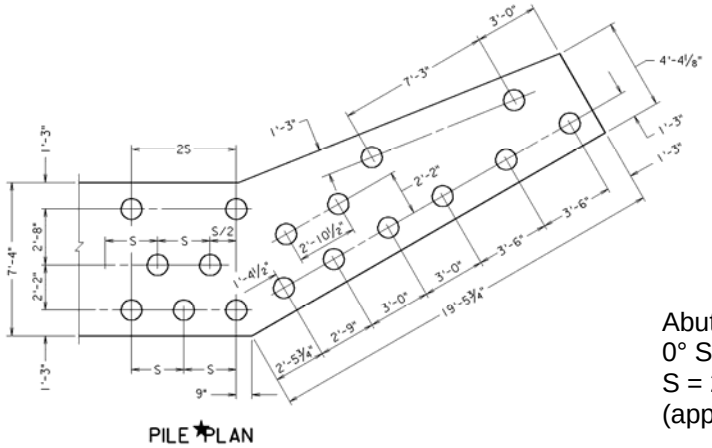

Abutment on Piles Pile Plan
0° Skew – Fill Slope 2 : 1 - H = 12'
S = 2'-6" to 2'-9"
(approx. 0.35 of actual cell size)

CELL	CELL NAME	CELL DESCRIPTION

P2013

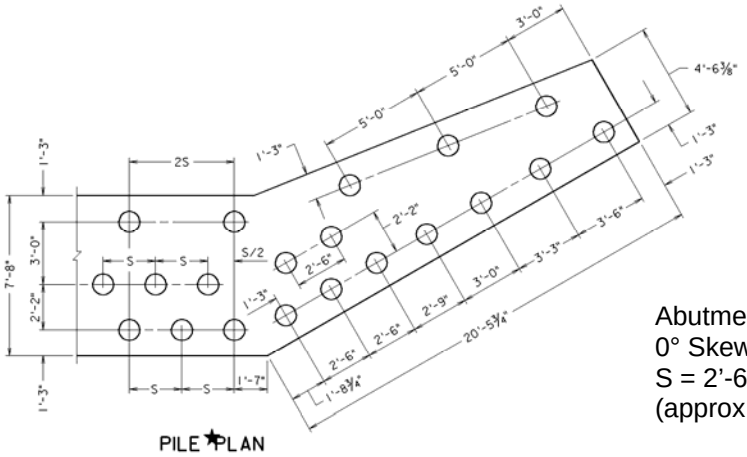

Abutment on Piles Pile Plan
0° Skew – Fill Slope 2 : 1 - H = 13'
S = 2'-6" to 2'-9"
(approx. 0.35 of actual cell size)

P2014

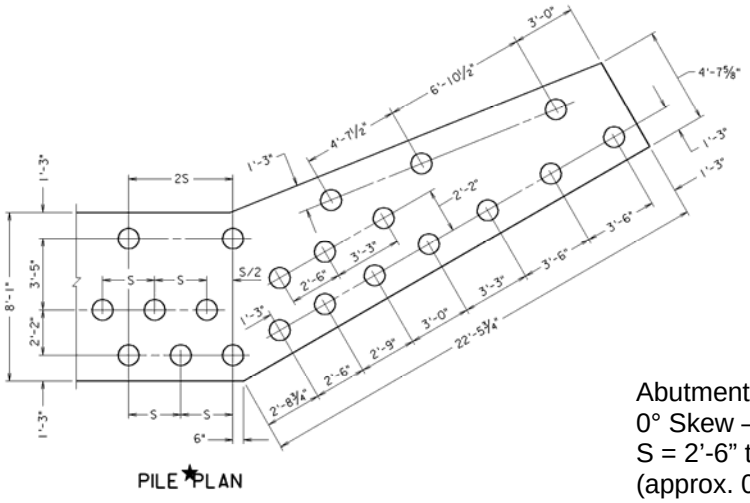

Abutment on Piles Pile Plan
0° Skew – Fill Slope 2 : 1 - H = 14'
S = 2'-6" to 2'-8"
(approx. 0.35 of actual cell size)

CELL	CELL NAME	CELL DESCRIPTION

P2304

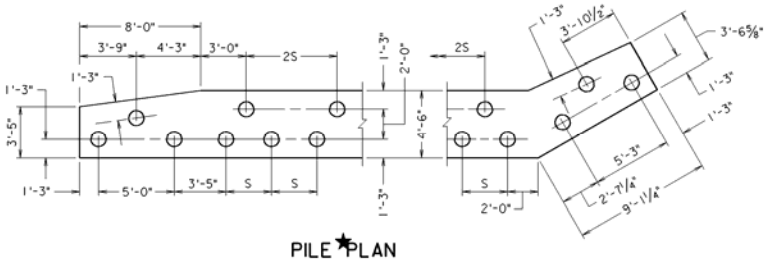

Abutment on Piles Pile Plan
30° Skew – Fill Slope 2 : 1 - H = 4'
S = 3'-0" to 3'-6"
(approx. 0.35 of actual cell size)

P2305

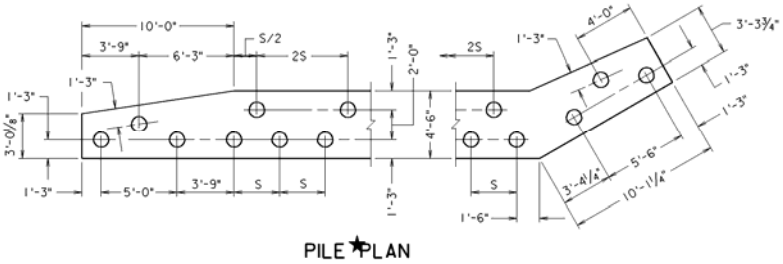

Abutment on Piles Pile Plan
30° Skew – Fill Slope 2 : 1 - H = 5'
S = 3'-0" to 3'-6"
(approx. 0.35 of actual cell size)

CELL	CELL NAME	CELL DESCRIPTION

P2306

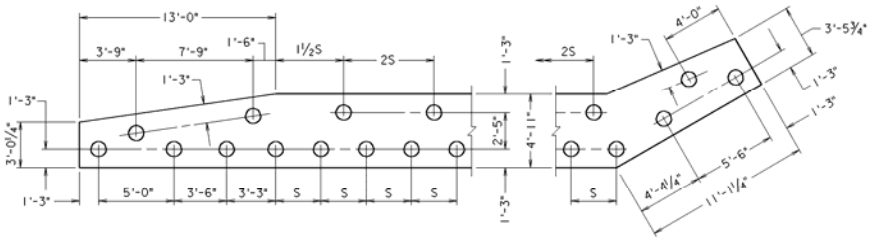

PILE PLAN

Abutment on Piles Pile Plan
30° Skew – Fill Slope 2 : 1 - H = 6'
S = 3'-0" to 3'-6"
(approx. 0.35 of actual cell size)

P2307

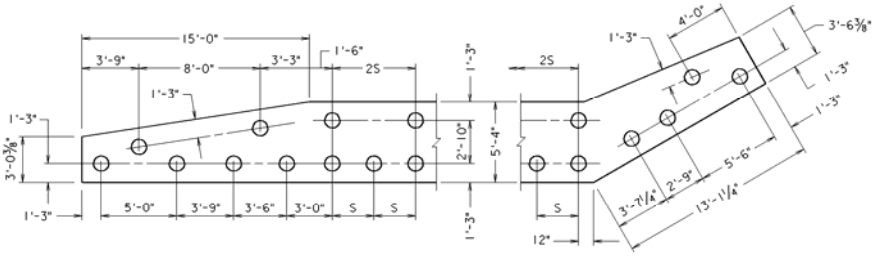

PILE PLAN

Abutment on Piles Pile Plan
30° Skew – Fill Slope 2 : 1 - H = 7'
S = 2'-9" to 3'-3"
(approx. 0.35 of actual cell size)

CELL	CELL NAME	CELL DESCRIPTION

P2308

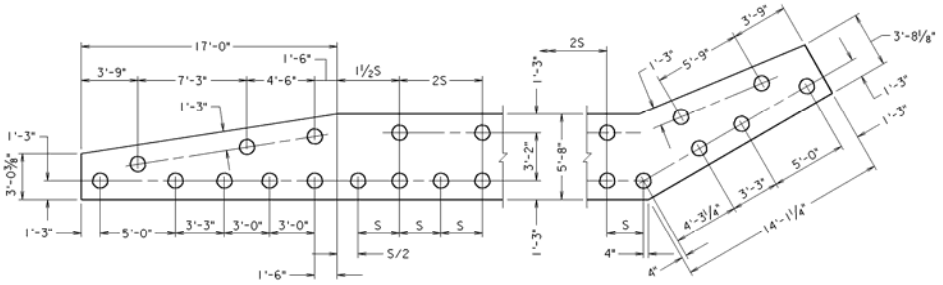

Abutment on Piles Pile Plan
30° Skew – Fill Slope 2 : 1 - H = 8'
S = 2'-9" to 3'-0"
(approx. 0.35 of actual cell size)

P2309

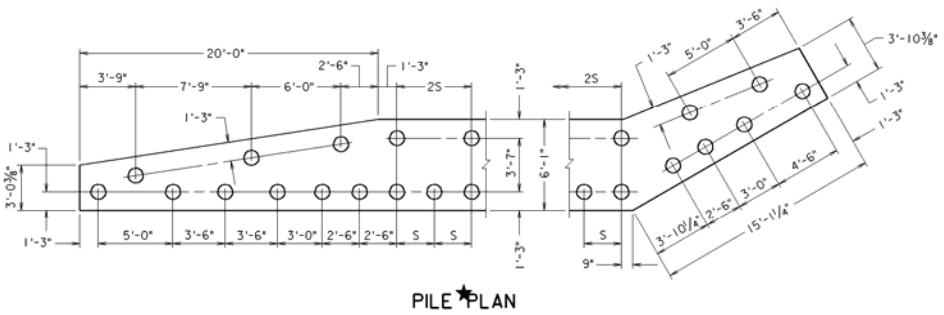

Abutment on Piles Pile Plan
30° Skew – Fill Slope 2 : 1 - H = 9'
S = 2'-6" to 2'-9"
(approx. 0.35 of actual cell size)

CELL	CELL NAME	CELL DESCRIPTION

P2310

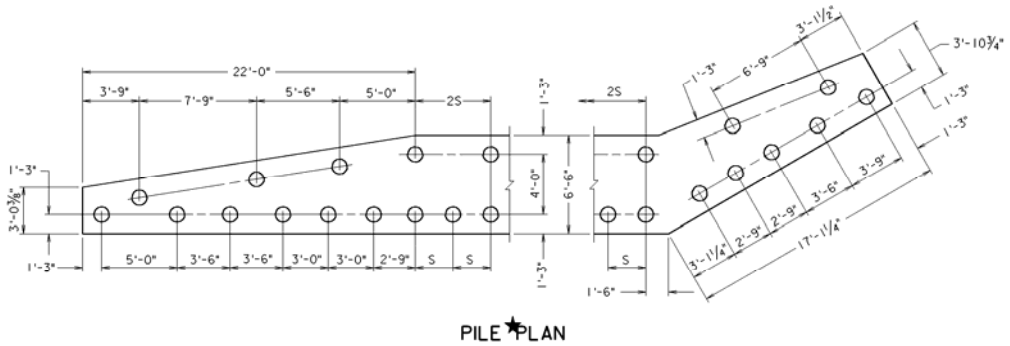

Abutment on Piles Pile Plan
30° Skew – Fill Slope 2 : 1 - H = 10'
S = 2'-6" to 2'-8"
(approx. 0.35 of actual cell size)

P2311

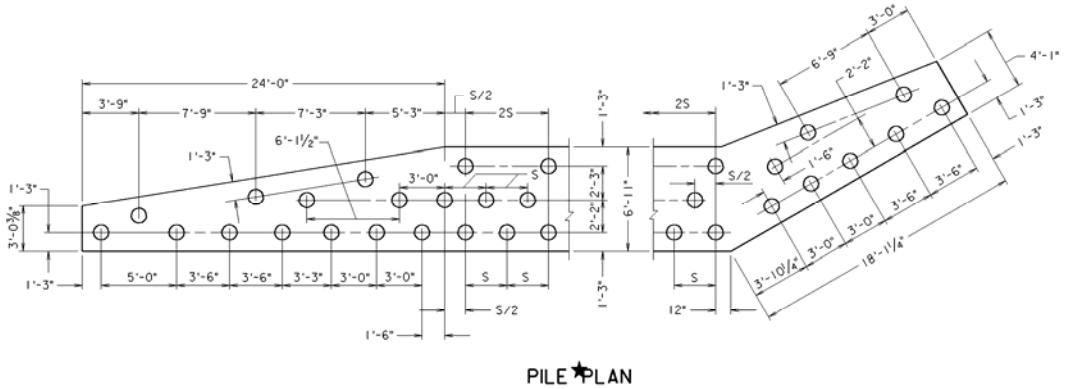

Abutment on Piles Pile Plan
30° Skew – Fill Slope 2 : 1 - H = 11'
S = 2'-9" to 3'-0"
(approx. 0.35 of actual cell size)

CELL	CELL NAME	CELL DESCRIPTION

P2312

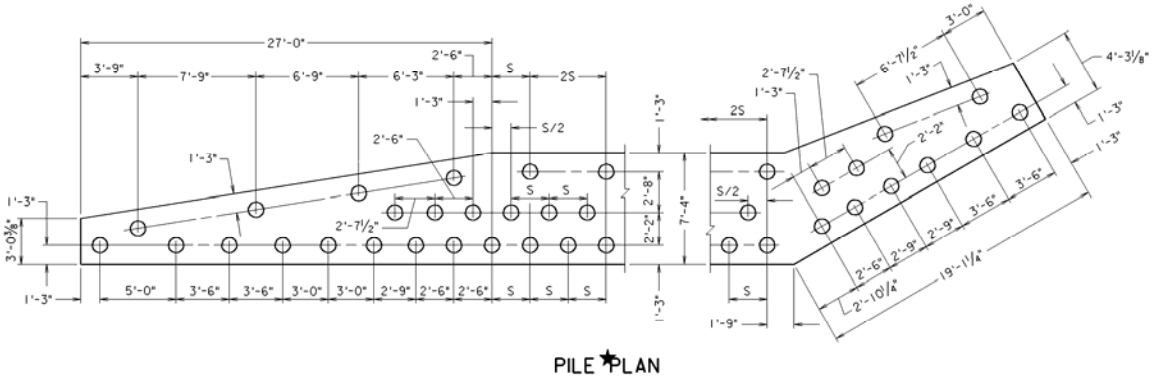

Abutment on Piles Pile Plan
30° Skew – Fill Slope 2 : 1 - H = 12'
S = 2'-6" to 2'-9"
(approx. 0.35 of actual cell size)

P2313

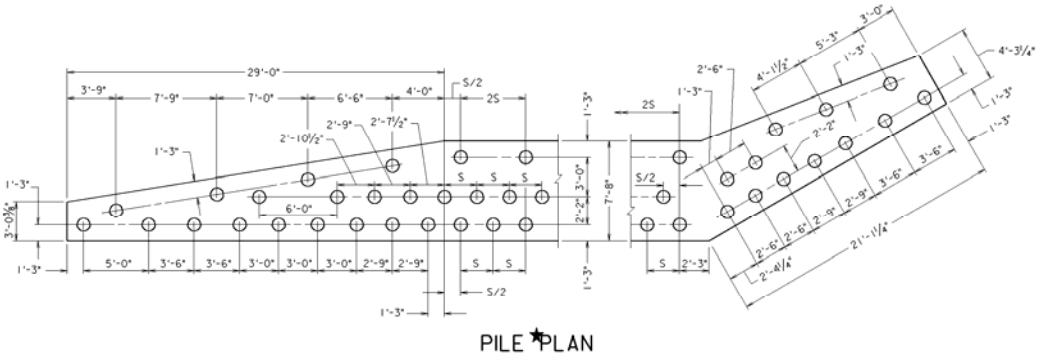

Abutment on Piles Pile Plan
30° Skew – Fill Slope 2 : 1 - H = 13'
S = 2'-6" to 2'-9"
(approx. 0.30 of actual cell size)

CELL	CELL NAME	CELL DESCRIPTION

P2314

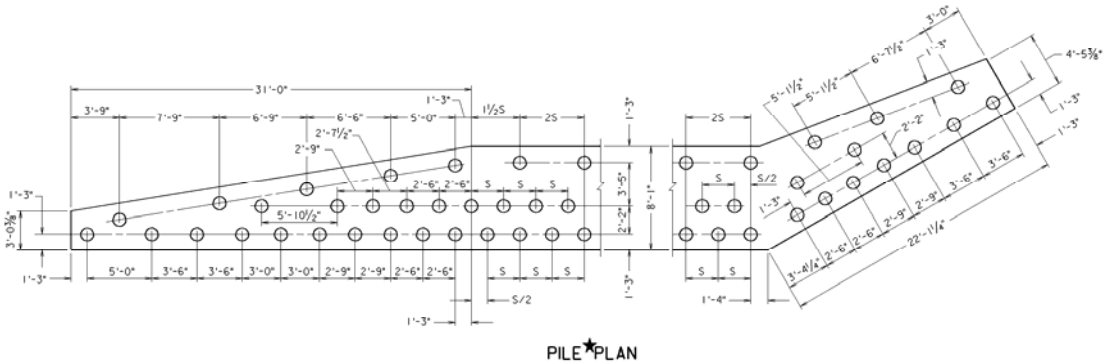

Abutment on Piles Pile Plan
30° Skew – Fill Slope 2 : 1 - H = 14’
S = 2’-6” to 2’-8”
(approx. 0.30 of actual cell size)

P2404

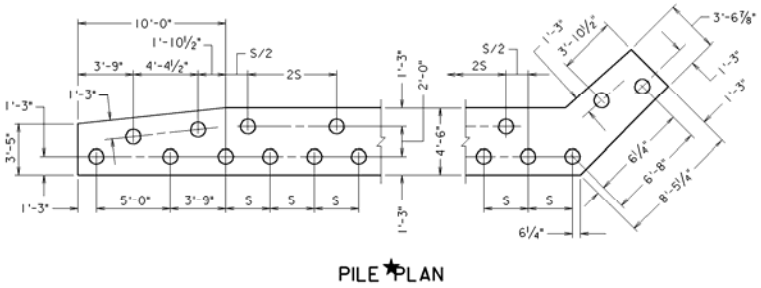

Abutment on Piles Pile Plan
45° Skew – Fill Slope 2 : 1 - H = 4’
S 3’-0” to 3’-6”
(approx. 0.35 of actual cell size)

CELL	CELL NAME	CELL DESCRIPTION

P2405

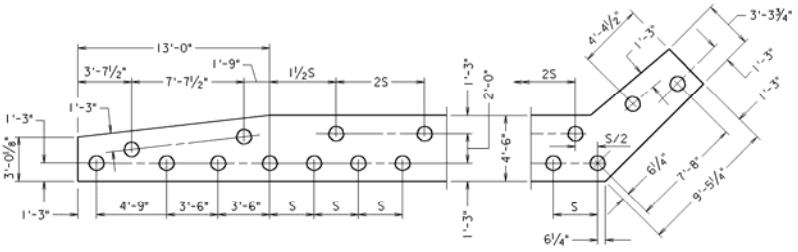

PILE PLAN

Abutment on Piles Pile Plan
45° Skew – Fill Slope 2 : 1 - H = 5'
S = 3'-0" to 3'-6"
(approx. 0.35 of actual cell size)

P2406

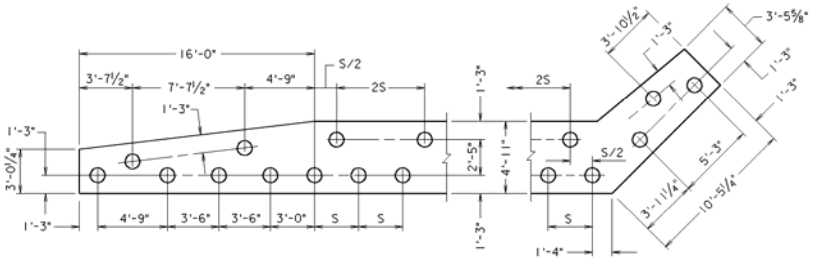

PILE PLAN

Abutment on Piles Pile Plan
45° Skew – Fill Slope 2 : 1 - H = 6'
S = 3'-0" to 3'-6"
(approx. 0.35 of actual cell size)

CELL	CELL NAME	CELL DESCRIPTION

P2407

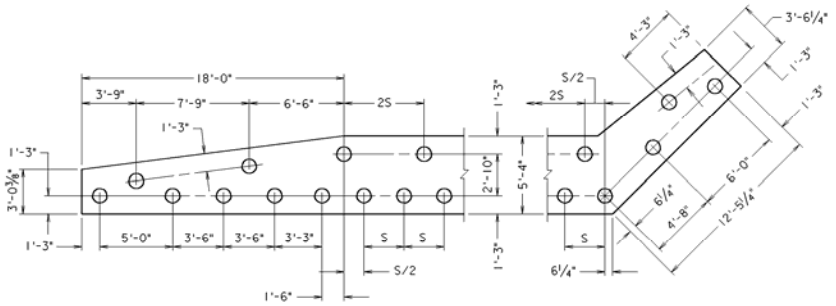

PILE PLAN

Abutment on Piles Pile Plan
45° Skew – Fill Slope 2 : 1 - H = 7'
S = 2'-9" to 3'-3"
(approx. 0.35 of actual cell size)

P2408

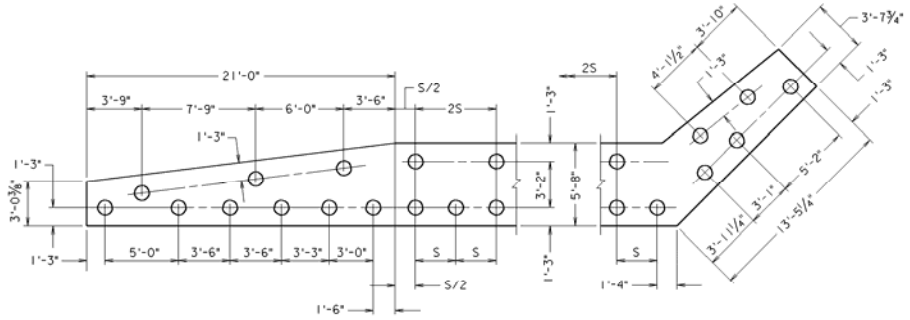

PILE PLAN

Abutment on Piles Pile Plan
45° Skew – Fill Slope 2 : 1 - H = 8'
S = 2'-9" to 3'-0"
(approx. 0.35 of actual cell size)

CELL	CELL NAME	CELL DESCRIPTION

P2409

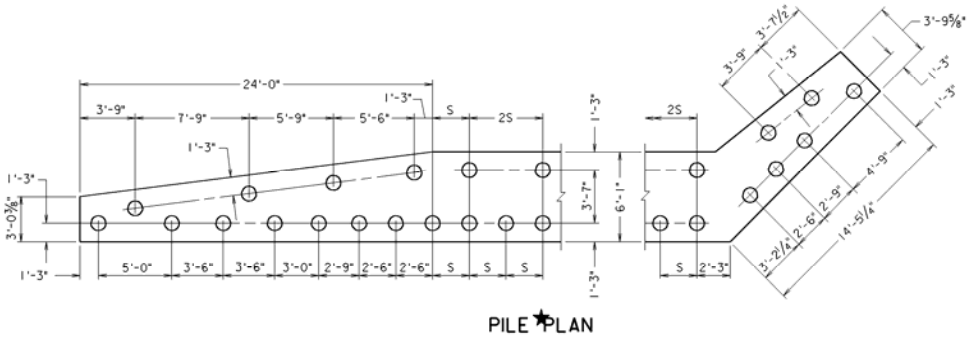

Abutment on Piles Pile Plan
45° Skew – Fill Slope 2 : 1 - H = 9'
S = 2'-6" to 2'-9"
(approx. 0.35 of actual cell size)

P2410

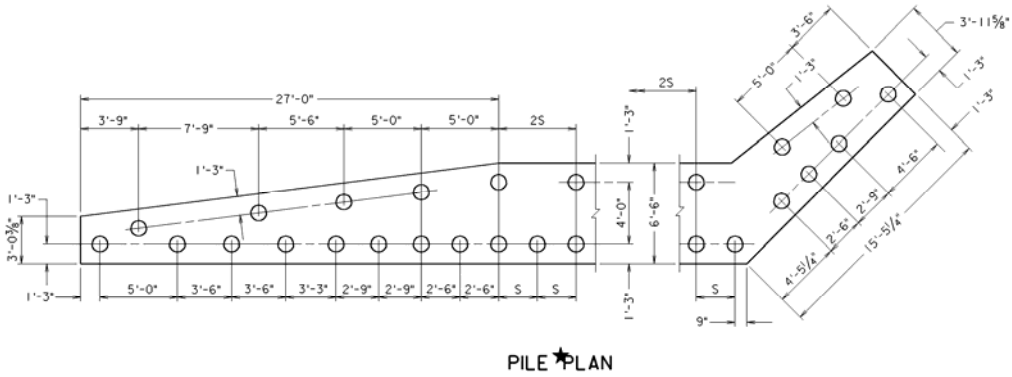

Abutment on Piles Pile Plan
45° Skew – Fill Slope 2 : 1 - H = 10'
S = 2'-6" to 2'-8"
(approx. 0.35 of actual cell size)

CELL	CELL NAME	CELL DESCRIPTION

P2411

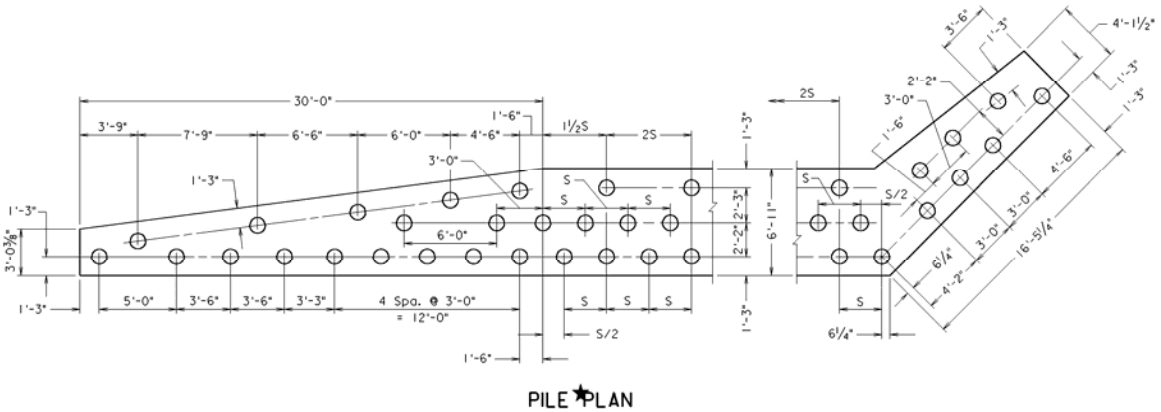

Abutment on Piles Pile Plan
45° Skew – Fill Slope 2 : 1 - H = 11'
S = 2'-9" to 3'-0"
(approx. 0.35 of actual cell size)

P2412

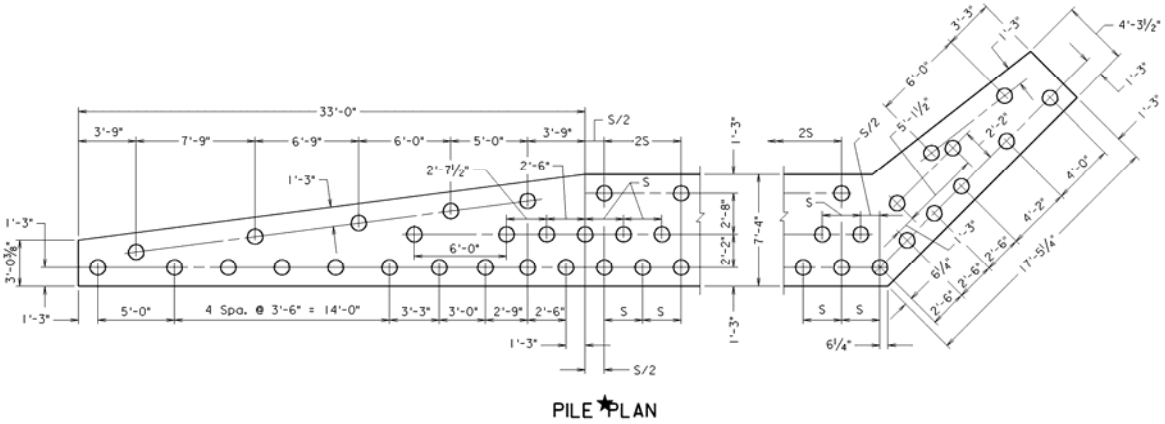

Abutment on Piles Pile Plan
45° Skew – Fill Slope 2 : 1 - H = 12'
S = 2'-6" to 2'-9"
(approx. 0.35 of actual cell size)

CELL	CELL NAME	CELL DESCRIPTION

P2413

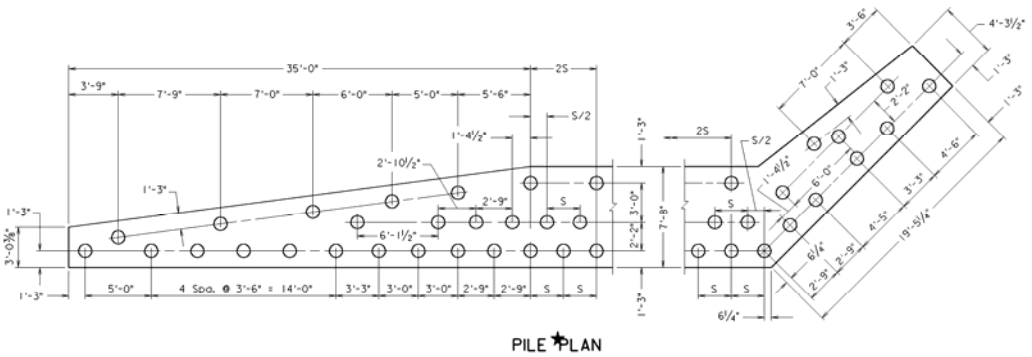

Abutment on Piles Pile Plan
45° Skew – Fill Slope 2 : 1 - H = 13'
S = 2'-6" to 2'-9"
(approx. 0.30 of actual cell size)

P2414

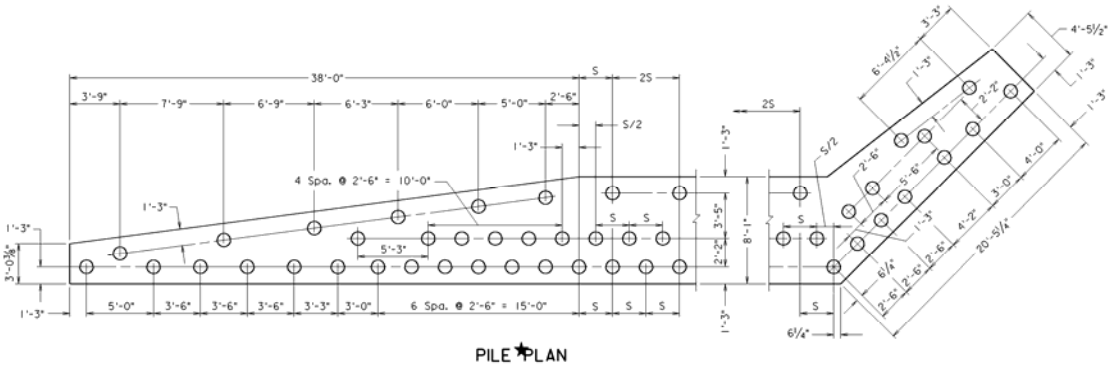

Abutment on Piles Pile Plan
45° Skew – Fill Slope 2 : 1 - H = 14'
S = 2'-6" to 2'-8"
(approx. 0.30 of actual cell size)

CELL	CELL NAME	CELL DESCRIPTION

PL0

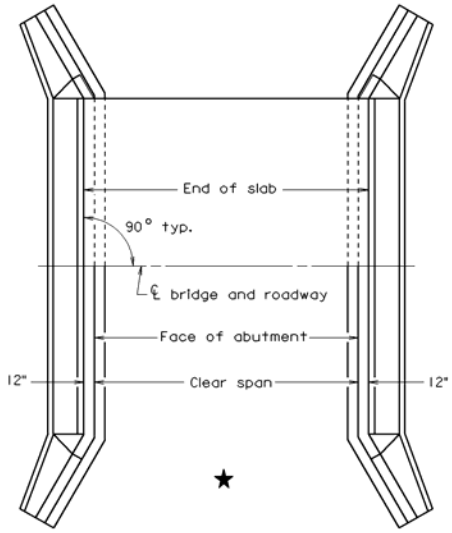

Plan View 0° skew
(approx. 0.40 of actual cell size)

PL30L

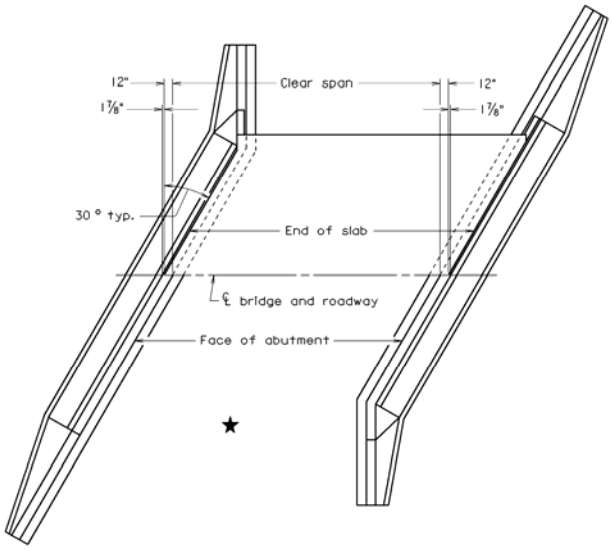

Plan View 30° skew
Left Hand (Left Side Forward)
(approx. 0.35 of actual cell size)

CELL	CELL NAME	CELL DESCRIPTION

PL30R

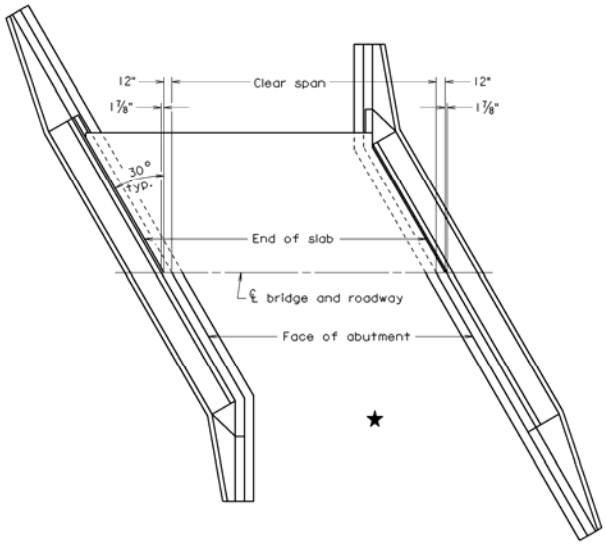

Plan View 30° skew
Right Hand (Right Side Forward)
(approx. 0.35 of actual cell size)

PL45L

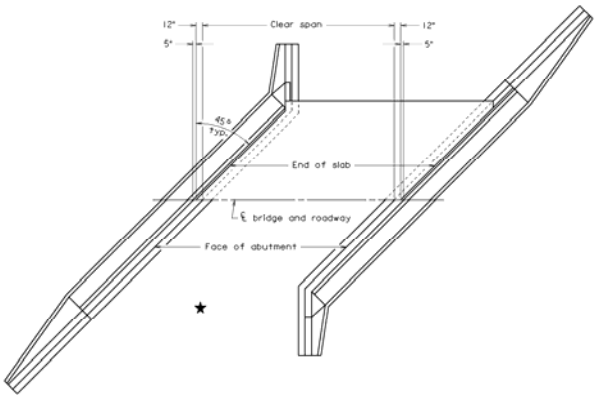

Plan View 45° skew
Left Hand (Left Side Forward)
(approx. 0.25 of actual cell size)

CELL	CELL NAME	CELL DESCRIPTION

PL45R

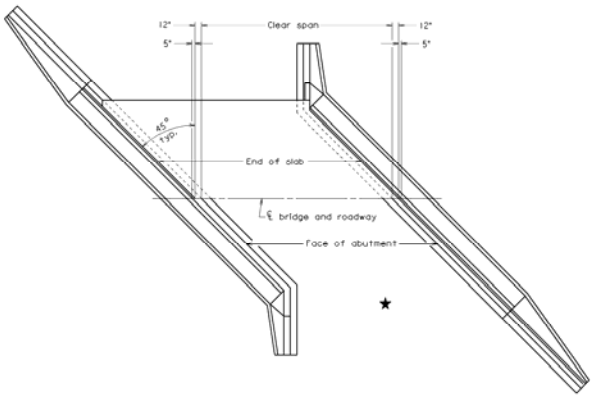

Plan View 45° skew
Right Hand (Right Side Forward)
(approx. 0.25 of actual cell size)

PP01

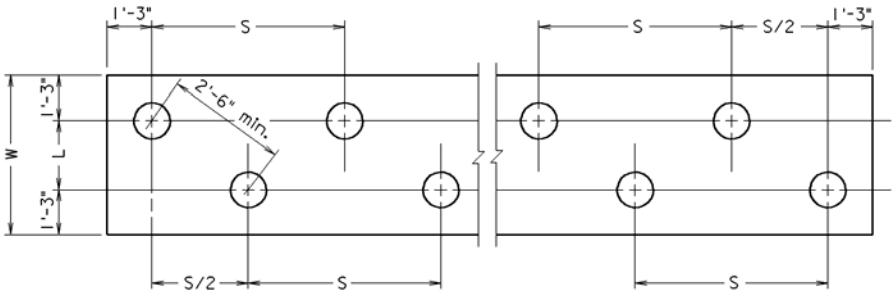

PILE PLAN

Pier Pile Plan
H = 4'-0" to 11'-0"
(approx. 0.50 of actual cell size)

CELL	CELL NAME	CELL DESCRIPTION

PP02

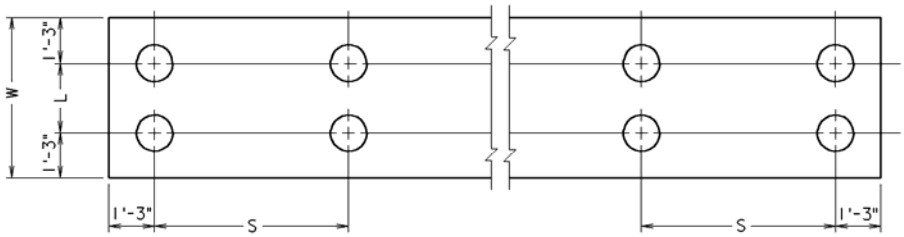

PILE PLAN

Pier Pile Plan
H = 12'-0" to 13'-0"
(approx. 0.50 of actual cell size)

PT1

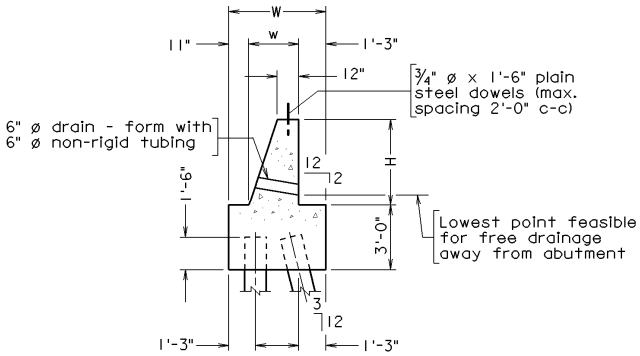

TYPICAL SECTION ON ℄

Abutment on Piles Typical Section
H = 4'-0"
No approach slab
(approx. 0.45 of actual cell size)

CELL	CELL NAME	CELL DESCRIPTION

PT1A

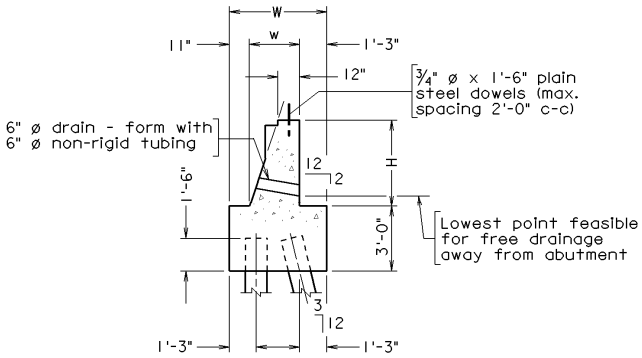

TYPICAL SECTION ON ℄

Abutment on Piles Typical Section
H = 4'-0"
With approach slab
(approx. 0.45 of actual cell size)

PT2

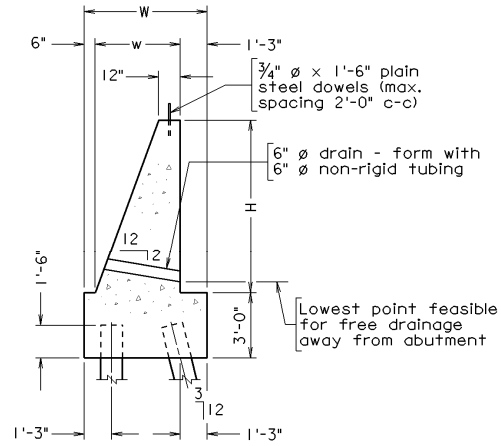

TYPICAL SECTION ON ℄

Abutment on Piles Typical Section
H = 5'-0" to 10'-0"
No approach slab
(approx. 0.45 of actual cell size)

CELL	CELL NAME	CELL DESCRIPTION

PT2A

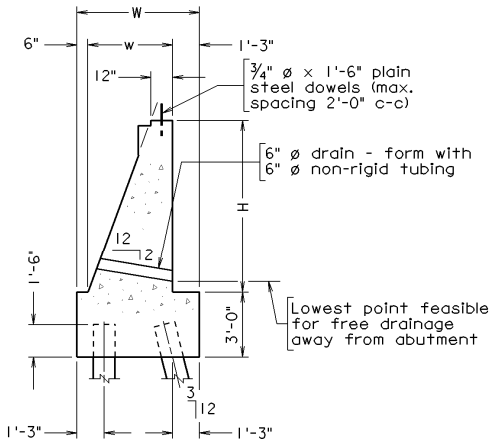

TYPICAL SECTION ON ℄

Abutment on Piles Typical Section
H = 5'-0" to 10'-0"
With approach slab
(approx. 0.45 of actual cell size)

PT3

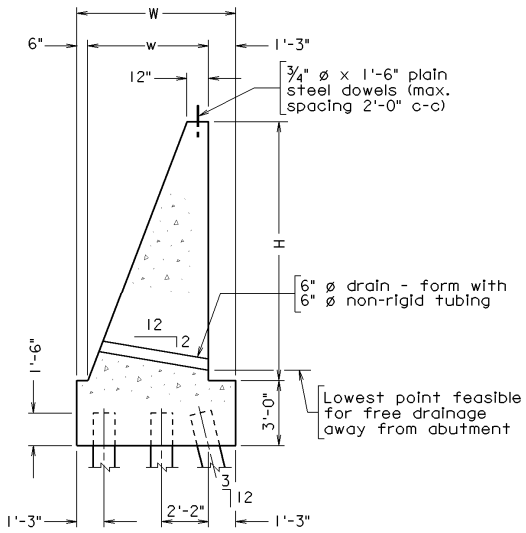

TYPICAL SECTION ON ℄

Abutment on Piles Typical Section
H = 11'-0" to 14'-0"
No Approach slab
(approx. 0.45 of actual cell size)

CELL	CELL NAME	CELL DESCRIPTION

PT3A

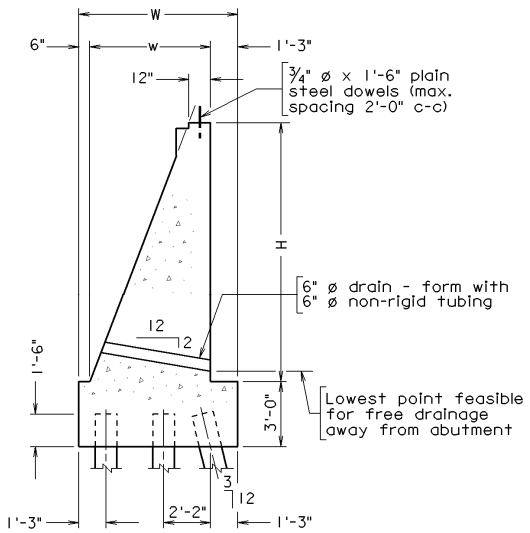

TYPICAL SECTION ON ℄

Abutment on Piles Typical Section
H = 11'-0" to 14'-0"
With Approach slab
(approx. 0.45 of actual cell size)

PT4

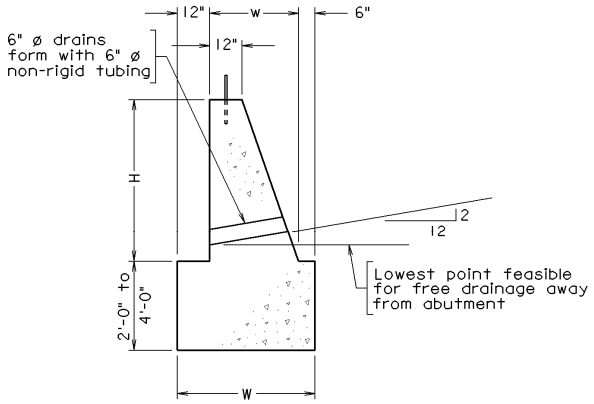

SECTION ON ℄

Abutment on Spread Footing
No approach slab
(approx. 0.45 of actual cell size)

CELL	CELL NAME	CELL DESCRIPTION
	PT4A	

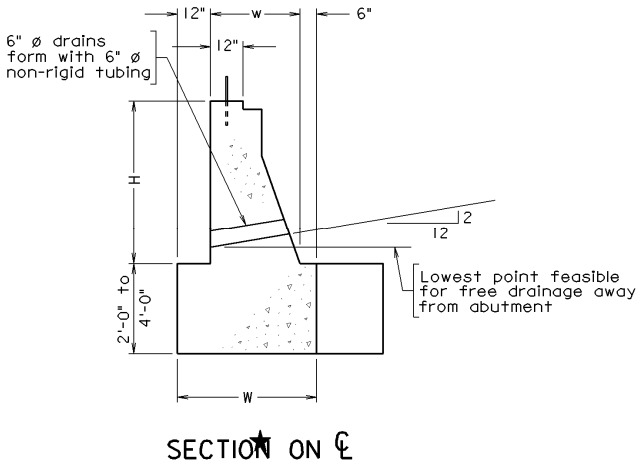

Abutment on Spread Footing
With approach slab
(approx. 0.45 of actual cell size)