MANUAL OF THE STRUCTURE AND BRIDGE DIVISION

PART 6

CAST-IN-PLACE CONCRETE SLAB STANDARDS

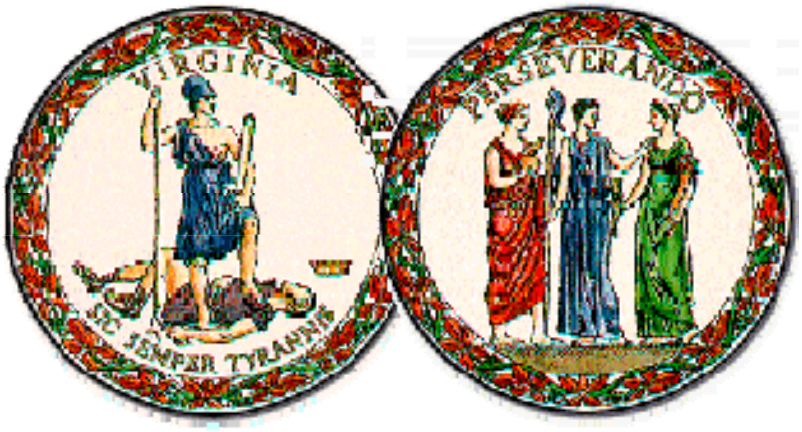

VIRGINIA DEPARTMENT OF TRANSPORTATION

VDOTGOVERNANCE DOCUMENT

VDOT Manual of the Structure and Bridge Division: Part 06: Cast in Place Concrete Slab Standards

OWNING DIVISION Structure and Bridge

DATE OF ISSUANCE: 3/10/2015

COMMONWEALTH of VIRGINIA

DEPARTMENT OF TRANSPORTATION
1401 EAST BROAD STREET
RICHMOND, 23219-2000

Charles A. Kilpatrick, P.E.
COMMISSIONER

March 10, 2015

SUBJECT: Manual of the Structure and Bridge Division – Part 6
Cast-in-Place Concrete Slab Standards

MEMORANDUM

TO: Holders of Manual

VOIDED:

None

NEW ISSUES:

None

REVISIONS:

File Number	Description of change(s)
TOC-1	Revised dates.
INSTR-1 and -2	Updated modification requirements and manual references. Moved some content to second sheet.

RETAIN THIS MEMO IN FRONT OF INDEX TO PART 6

/original signed/
Prasad Nallapaneni, P.E.
Assistant State Structure and Bridge Engineer

For: Kendal R. Walus, P.E.
State Structure and Bridge Engineer

COMMONWEALTH of VIRGINIA

DEPARTMENT OF TRANSPORTATION
1401 EAST BROAD STREET
RICHMOND, 23219-2000

Gregory A. Whirley
COMMISSIONER

January 25, 2013

SUBJECT: Manual of the Structure and Bridge Division
Volume V – Part 6
Cast-in-Place Concrete Slab Standards

MEMORANDUM

TO: Holders of Volume V – Part 6: Cast-in-Place Concrete Slab Standards

VOIDED:

None

NEW ISSUES:

File Number	Description of change(s)

REVISIONS:

File Number	Description of change(s)
TOC-1, -3 and -4	Revised date of applicable sheets.

REVISIONS (continued):

File Number	Description of change(s)
CS-TS-1	GENERAL NOTES: Replaced reinforcing steel notes with "Insert applicable reinforcing steel note(s)."
CS-TS-2	GENERAL NOTES: Added a note for selection of applicable reinforcing steel note(s).
CS-EST-1	ESTIMATED QUANTITIES – SUPERSTRUCTURE ONLY: Added "Class …." to Corrosion Resistant Reinforcing Steel.
CS-EST-2	ESTIMATED QUANTITIES: Replaced "type" with "Class I, II or III."
CS-10-20-0-1, CS-10-20-30-1, CS-10-20-45-1, CS-22-32-0-1, CS-22-32-30-1 and CS-22-32-45-1	Notes: Added "Class …" to Corrosion Resistant Reinforcing Steel.
CS-10-20-0-2, CS-10-20-30-2 and CS-10-20-45-2	ESTIMATED QUANTITIES: Deleted "Epoxy Coated" from reinforcing steel.
CS-10-20-0-3, CS-10-20-30-3 and CS-10-20-45-3	NOTES: Replaced "type" with "Class I, II or III."
CS-22-32-0-2, CS-22-32-30-2 and CS-22-32-45-2	ESTIMATED QUANTITIES: Deleted "Epoxy Coated" from reinforcing steel; NOTES: replaced "type" with "Class I, II or III."
CS-P1-1	Notes: Added "Class …" to Corrosion Resistant Reinforcing Steel; REINFORCING STEEL SCHEDULE: revised the dimensions and length of reinforcing bar RV0502; SECTION A-A; added 2 in. dimension from reinforcing bar to face of curb.
CS-P1-2	NOTES to DESIGNER: Deleted second note and replaced "type" with "Class I, II or III."

REVISIONS (continued):

File Number	Description of change(s)
CS-P3-1	Notes: Added "Class …" to Corrosion Resistant Reinforcing Steel; REINFORCING STEEL SCHEDULE: revised the dimensions and length of reinforcing bar RV0502.
CS-P3-2	NOTES: Replaced "type" with "Class I, II or III."
CS-CR1-1	Notes: Added "Class …" to Corrosion Resistant Reinforcing Steel.
CS-CR1-2	NOTES: Replaced "type" with "Class I, II or III."

RETAIN THIS MEMO IN FRONT OF INDEX TO VOLUME V – PART 6

/original signed/
Julius F. J. Völgyi, Jr., P.E.
Assistant State Structure and Bridge Engineer

For: Kendal R. Walus, P.E.
State Structure and Bridge Engineer

COMMONWEALTH of VIRGINIA

DEPARTMENT OF TRANSPORTATION
1401 EAST BROAD STREET
RICHMOND, 23219-2000

Gregory A. Whirley
COMMISSIONER

August 30, 2012

SUBJECT: Manual of the Structure and Bridge Division
Volume V – Part 6
Cast-in-Place Concrete Slab Spans

MEMORANDUM

TO: Holders of Volume V – Part 6: Cast-in-Place Concrete Slab Spans

The revision is intended to clarify modifications to standards. Design waivers/exceptions are required when changes to the standards are made.

VOIDED:

None

NEW ISSUES:

None

REVISIONS:

File Number	Description of change(s)
TOC-1	Revised date of sheet; added additional page, INSTR-2, and moved contents next page.
TOC-2	Revised date of sheet; added contents from previous page.
INSTR-1	Added instructions for completing the title sheet; revised modification policy; moved last three paragraphs to new page.
INSTR-2	Added paragraphs from previous page.
INSTR-3 thru -5	Revised page numbers.

RETAIN THIS MEMO IN FRONT OF INDEX TO VOLUME V – PART 6

/original signed/
Julius F. J. Völgyi, Jr., P.E.
Assistant State Structure and Bridge Engineer

For: Kendal R. Walus, P.E.
State Structure and Bridge Engineer

COMMONWEALTH of VIRGINIA

DEPARTMENT OF TRANSPORTATION
1401 EAST BROAD STREET
RICHMOND, 23219-2000

Gregory A. Whirley
COMMISSIONER

March 26, 2012

SUBJECT: Manual of the Structure and Bridge Division
Volume V – Part 6
Cast in Place Concrete Slab Standards

MEMORANDUM

TO: Holders of Volume V – Part 6: Cast in Place Concrete Slab Standards

VOIDED:

File Number	Description of change(s)
CS-22V-32V-0 CS-22V-32V-30 CS-22V-32V-45	Standard sheet (DGN) and NOTES TO DESIGNER (-1 and -2) are VOIDED as there is a possible conflict with the standards and the current AASHTO LRFD Bridge design Specifications.

NEW ISSUES:

File Number	Description of change(s)
None	

REVISED:

File Number	Description of change(s)
TOC-1	Updated for Specifications and Capacity; Designer is required to check adequacy to meet LRFD Bridge Design Specifications.

REVISED (continued):

File Number	Description of change(s)
TOC-4	Deleted cast-in-place voided concrete slab standards.
INSTR-1	Revised the Specifications and Design Loading in instructions for title sheet.
INSTR-2 and INSTR-3	Lined though CS-22V-0, CS-22V-30 and CS-22V-45.
CS-TS	Revised the Specifications and Design Loading in General Notes.
CS-P3	Revised distance to bolts in Section C-C and the width of concrete support in Section B-B.
CS-CR1	Revised distance to bolts in View A-A and the width of concrete support in Section B-B. Added a note for dimension "d" and a standard reference in notes.

RETAIN THIS MEMO IN FRONT OF INDEX TO VOLUME V – PART 6

/original signed/
Julius F. J. Völgyi, Jr., P.E.
Assistant State Structure and Bridge Engineer

For: Kendal R. Walus, P.E.
State Structure and Bridge Engineer

COMMONWEALTH of VIRGINIA

DEPARTMENT OF TRANSPORTATION
1401 EAST BROAD STREET
RICHMOND, 23219-2000

Gregory A. Whirley
Acting COMMISSIONER

June 14, 2010

SUBJECT: Manual of the Structure and Bridge Division
Volume V – Part 6
Cast-in-Place Concrete Slab Standards

MEMORANDUM

TO: Holders of Volume V – Part 6: Cast-in-Place Concrete Standards

VOIDED:

File Number	Description of change(s)
None	

NEW ISSUES:

File Number	Description of change(s)
None	

REVISIONS:

Note: For all standards, the block with FHWA Region 3 and block in the upper right corner for Special Provisions/Copied Notes has been deleted . The copyright date has been changed to 2010.

RETAIN THIS MEMO IN FRONT OF INDEX TO VOLUME V – PART 6

/original signed/
Julius F. J. Völgyi, Jr., P.E.
Assistant State Structure and Bridge Engineer

For: Kendal R. Walus, P.E.
State Structure and Bridge Engineer

COMMONWEALTH of VIRGINIA

DEPARTMENT OF TRANSPORTATION
1401 EAST BROAD STREET
RICHMOND, 23219-2000

David S. Ekern, P.E.
COMMISSIONER

January 7, 2010

SUBJECT: Manual of the Structure and Bridge Division
Volume V – Part 6
Cast-in-Place Concrete Slab Standards

MEMORANDUM

TO: Holders of Volume V – Part 6: Cast-in-Place Concrete Slab Standards

VOIDED STANDARDS:

None

NEW ISSUES:

File Number	Description of changes(s)
CS-10-20-0-3,CS-10-20-30-3, and CS-10-20-45-3	Added instructions for the designer to specify the type of CRR.

REVISIONS:

File Number	Description of changes(s)
TOC-1,TOC-3 and TOC-4	Revised date.
CS-TS	Revised the reinforcing steel note to call for corrosion resistant reinforcing steel (CRR).
CS-EST	Revised the reinforcing steel bid item to call for corrosion resistant reinforcing steel (CRR).
CS-EST-2	Added instructions for the designer to specify the type of CRR.
CS-10-20-0, CS-10-20-30, and CS-10-20-45	Revised the reinforcing steel note to call for corrosion resistant reinforcing steel (CRR).

REVISIONS (cont'd):

File Number	Description of changes(s)
CS-10-20-0-2, CS-10-20-30-2, and CS-10-20-45-2	Revised date.
CS-22-32-0, CS-22-32-30, and CS-22-32-45	Revised the reinforcing steel note to call for corrosion resistant reinforcing steel (CRR).
CS-22-32-0-2, CS-22-32-30-2, and CS-22-32-45-2	Added instructions for the designer to specify the type of CRR.
CS-22V-32V-0, CS-22V-32V-30 , and CS-22V-32V-45	Revised the reinforcing steel note to call for corrosion resistant reinforcing steel (CRR).
CS-22V-32V-0-2, CS-22V-32V-30-2, and CS-22V-32V-45-2	Added instructions for the designer to specify the type of CRR.
CS-P1, CS-P3, and CS-CR1	Revised the reinforcing steel note to call for corrosion resistant reinforcing steel (CRR).
CS-P1-2, CS-P3-2, and CS-CR1-2	Added instructions for the designer to specify the type of CRR.

RETAIN THIS MEMO IN FRONT OF INDEX TO VOLUME V – PART 6

/original signed/
Julius F. J. Völgyi, Jr., P.E.
Assistant State Structure and Bridge Engineer

For: Kendal R. Walus, P.E.
State Structure and Bridge Engineer

COMMONWEALTH of VIRGINIA

DEPARTMENT OF TRANSPORTATION
1401 EAST BROAD STREET
RICHMOND, 23219-2000

David S. Ekern, P.E.
COMMISSIONER

May 29, 2009

SUBJECT: Manual of the Structure and Bridge Division
Volume V – Part 6
Cast-in-Place Concrete Slab Spans

MEMORANDUM

TO: Holders of Volume V – Part 6: Cast-in-Place Concrete Slab Spans

NOTE: Effective with the December Advertisement, Standards shall be sealed and signed in accordance with Volume V – Part 2, File No. 01.16.1 thru 01.16.7.

VOIDED STANDARDS:

None

NEW ISSUES:

None

REVISIONS:

File Number	Description of changes(s)
All standard sheets	All standard sheets have been revised to reflect the border for sealing and signing of plans.
CS-P-0-1	Minor drafting correction.
CS-P-30-1	Minor drafting correction.
CS-P-45-1	Minor drafting correction.
CS-PP-0-1	Minor drafting correction.
CS-PP-30-1	Minor drafting correction.
CS-PP-45-1	Minor drafting correction.

REVISIONS:

File Number	Description of changes(s)
CS-P1-1	Modified terminal section and minor drafting correction.
CS-CR-1-1	Modified terminal section and minor drafting correction.
CS-CR-2-1	Modified terminal section.
CS-P1-1	Minor drafting correction.
CS-P2-1	Modified terminal section.
CS-P3-1	Modified terminal section and minor drafting correction.
CS-GR-1	Minor drafting correction.

RETAIN THIS MEMO IN FRONT OF INDEX TO VOLUME V – PART 6.

/original signed/
Julius F. J. Völgyi, Jr., P.E.
Assistant State Structure and Bridge Engineer

For: Kendal R. Walus, P.E.
State Structure and Bridge Engineer

COMMONWEALTH of VIRGINIA

DEPARTMENT OF TRANSPORTATION
1401 EAST BROAD STREET
RICHMOND, 23219-2000

David S. Ekern, P.E.
COMMISSIONER

July 11, 2008

SUBJECT: Manual of the Structure and Bridge Division
Volume V – Part 6
Cast-in-Place Concrete Slab Spans

MEMORANDUM

TO: Holders of Volume V – Part 6: Cast-in-Place Concrete Slab Spans

All of the standards in the Manual of the Structure and Bridge Division Volume V- Part 6 have been revised including the NOTES TO DESIGNER. Major revisions include updating the standards to the drafting requirements of the office practice (Manual of the Structure and Bridge Division, Volume V – Part 2, Chapter 1), changing the copyright date to 2008, and adding two blocks for signing and sealing the plans in the bottom left corner of the sheet. In order to provide space for the P.E. stamps, some details have been rearranged on the sheet. The number of drawings has been reduced by incorporating a cell library for repetitive details and the tables for computation of quantities have been moved to the NOTES TO DESIGNER.

NOTE: Standard sheets are not required to be sealed and signed at this time.

VOIDED STANDARDS:

None

NEW ISSUES:

File Number	Description
INSTR-2 and -3	Added instructions for plan assembly.
INSTR-4 and -5	Added instructions for external users for accessing MicroStation (.dgn) files and cell library (cs.cel) and for printing manual.

REVISIONS:

File Number	Description of change(s)
TOC-1 thru -6	Added –DGN link to each standard file. Table of contents updated. Added –CEL link for cell library.
INSTR-1	Falcon location changed.

Note: Standard CS-L has been deleted and the instructions on plan assembly moved to the general instructions. Standard CS-21a widening details has been deleted at this time.

RETAIN THIS MEMO IN FRONT OF INDEX TO VOLUME V – PART 6.

/original signed/
Julius F. J. Völgyi, Jr., P.E.
Assistant State Structure and Bridge Engineer

For: Kendal R. Walus, P.E.
State Structure and Bridge Engineer

COMMONWEALTH of VIRGINIA

DEPARTMENT OF TRANSPORTATION
1401 EAST BROAD STREET
RICHMOND, 23219-2000

PHILIP A. SHUCET
COMMISSIONER

November 1, 2004

Manual of the Structure and Bridge Division
Volume V – Part 6
Cast-in-Place Concrete Slab Spans

MEMORANDUM

TO: Holders of Volume V – Part 6 --- Cast-in-Place Concrete Slab Spans

REVISIONS:

The following sheets are revised:

TOC This sheet was previously named "INDEX." Sheets that are intended to be 11 x 17 are marked with an asterisk (*). Note added at the bottom of the sheet to explain asterisk symbol.

INSTR "Instructions" at top of sheet deleted. Added "'GENERAL" to title at bottom of sheet.

NOTE: The borders on all 8 ½ x 11 sheets are now ½" except for the left which is 1". The font has been changed from Universe to Arial. In some instances the NOTES TO DESIGNER may have spilled over to additional sheet(s) due to the changes in the border and font. The 8 ½ x 11 sheets have not been redistributed.

RETAIN THIS MEMO IN FRONT OF INDEX TO VOLUME V – PART 6.

/original signed/
Julius F. J. Völgyi, Jr., P.E.
Assistant State Structure and Bridge Engineer

For: George M. Clendenin, P.E.
State Structure and Bridge Engineer

Attachments

COMMONWEALTH of VIRGINIA

DEPARTMENT OF TRANSPORTATION
1401 EAST BROAD STREET
RICHMOND, 23219-2000

PHILIP A. SHUCET
COMMISSIONER

July 1, 2004

Manual of the Structure and Bridge Division
Volume V – Part 6
Cast-in-Place Concrete Slab Spans

MEMORANDUM

TO: Holders of Volume V – Part 6 --- Cast-in-Place Concrete Slab Spans

NEW ISSUE:

The Manual of the Structure and Bridge Division, Volume V – Part 6 --- Cast-in-Place Concrete Slab Spans includes standards for a complete set of plans including title sheet, estimated quantities and index of sheets, parapet/railing details, foundations are for spread footings and for pile foundations including 1 ½ : 1 and 2 : 1 fill slopes. Span lengths range from 10 to 32 feet with skew angles of 0°, 30°, and 45°.

RETAIN THIS MEMO IN FRONT OF INDEX TO VOLUME V – PART 6.

/original signed/
Julius F. J. Völgyi, Jr., P.E.
Assistant State Structure and Bridge Engineer

For: George M. Clendenin, P.E.
State Structure and Bridge Engineer

Attachments

VOLUME V – PART 6
CAST-IN-PLACE CONCRETE SLAB STANDARDS

TABLE OF CONTENTS

FILE NO.	TITLE		DATE
	TABLE OF CONTENTS & GENERAL INSTRUCTIONS		
TOC	-1	Table of Contents	10Mar2015
TOC	-2	Table of Contents – cont'd	30Aug2012
TOC	-3	Table of Contents – cont'd	25Jan2013
TOC	-4	Table of Contents – cont'd	25Jan2013
TOC	-5	Table of Contents – cont'd	11Jul2008
TOC	-6	Table of Contents – cont'd	11Jul2008
INSTR	-1	General Instructions	10Mar2015
INSTR	-2	General Instructions	10Mar2015
INSTR	-3	General Instructions: Plan Assembly for 0° and 30° skew	30Aug2012
INSTR	-4	General Instructions: Plan Assembly for 45° skew	30Aug2012
INSTR	-5	External Users: File Access Instructions	30Aug2012
INSTR	-6	External Users: File Access Instructions	30Aug2012
	TITLE SHEET AND QUANTITES		
*CS-TS	-1	Title Sheet	25Jan2013
	-2	Notes to Designer	25Jan2013
	-DGN	Microstation Drawing File	
*CS-EST	-1	Estimated Quantities and Index of Sheets	25Jan2013
	-2	Notes to Designer	25Jan2013
	-DGN	Microstation Drawing File	
	ABUTMENTS		
*CS-A15-0	-1	0° Skew – Fill Slope 1 ½ : 1	14Jun2010
	-2	Notes to Designer	11Jul2008
	-3	Notes to Designer	11Jul2008
	-DGN	Microstation Drawing File	
*CS-A15-30	-1	30° Skew – Fill Slope 1 ½ : 1	14Jun2010
	-2	Notes to Designer	11Jul2008
	-3	Notes to Designer	11Jul2008
	-DGN	Microstation Drawing File	
*CS-A15-45	-1	45° Skew – Fill Slope 1 ½ : 1	14Jun2010
	-2	Notes to Designer	11Jul2008
	-3	Notes to Designer	11Jul2008
	-DGN	Microstation Drawing File	
*CS-A2-0	-1	0° Skew – Fill Slope 2 : 1	14Jun2010
	-2	Notes to Designer	11Jul2008
	-3	Notes to Designer	11Jul2008
	-DGN	Microstation Drawing File	

*Indicates 11 x 17 sheet; all others are 8 ½ x 11.

VOLUME V – PART 6
CAST-IN-PLACE CONCRETE SLAB STANDARDS

TABLE OF CONTENTS (cont'd)

FILE NO.	TITLE		DATE
	ABUTMENTS (cont'd)		
*CS-A2-30	-1	30° Skew – Fill Slope 2 : 1	14Jun2010
	-2	Notes to Designer	11Jul2008
	-3	Notes to Designer	11Jul2008
	-DGN	Microstation Drawing File	
*CS-A2-45	-1	45° Skew – Fill Slope 2 : 1	14Jun2010
	-2	Notes to Designer	11Jul2008
	-3	Notes to Designer	11Jul2008
	-DGN	Microstation Drawing File	
	ABUTMENTS ON PILES		
*CS-APL15-0	-1	0° Skew - Fill Slope 1 ½ : 1	14Jun2010
	-2	Notes to Designer	11Jul2008
	-3	Notes to Designer	11Jul2008
	-DGN	Microstation Drawing File	
*CS-APL15-30	-1	30° Skew - Fill Slope 1 ½ : 1	14Jun2010
	-2	Notes to Designer	11Jul2008
	-3	Notes to Designer	11Jul2008
	-DGN	Microstation Drawing File	
*CS-APL15-45	-1	45° Skew - Fill Slope 1 ½ : 1	14Jun2010
	-2	Notes to Designer	11Jul2008
	-3	Notes to Designer	11Jul2008
	-DGN	Microstation Drawing File	
*CS-APL2-0	-1	0° Skew - Fill Slope 2 : 1	14Jun2010
	-2	Notes to Designer	11Jul2008
	-3	Notes to Designer	11Jul2008
	-DGN	Microstation Drawing File	
*CS-APL2-30	-1	30° Skew - Fill Slope 2 : 1	14Jun2010
	-2	Notes to Designer	11Jul2008
	-3	Notes to Designer	11Jul2008
	-DGN	Microstation Drawing File	
*CS-APL2-45	-1	45° Skew - Fill Slope 2 : 1	14Jun2010
	-2	Notes to Designer	11Jul2008
	-3	Notes to Designer	11Jul2008
	-DGN	Microstation Drawing File	

*Indicates 11 x 17 sheet; all others are 8 ½ x 11.

VOLUME V – PART 6
CAST-IN-PLACE CONCRETE SLAB STANDARDS

TABLE OF CONTENTS (cont'd)

FILE NO.	TITLE		DATE
		PIERS	
*CS-P-0	-1	0° Skew	14Jun2010
	-2	Notes to Designer	11Jul2008
	-3	Notes to Designer	11Jul2008
	-DGN	Microstation Drawing File	
*CS-P-30	-1	30° Skew	14Jun2010
	-2	Notes to Designer	11Jul2008
	-3	Notes to Designer	11Jul2008
	-DGN	Microstation Drawing File	
*CS-P-45	-1	45° Skew	14Jun2010
	-2	Notes to Designer	11Jul2008
	-3	Notes to Designer	11Jul2008
	-DGN	Microstation Drawing File	
		PIERS ON PILES	
*CS-PP-0	-1	0° Skew	14Jun2010
	-2	Notes to Designer	11Jul2008
	-3	Notes to Designer	11Jul2008
	-DGN	Microstation Drawing File	
*CS-PP-30	-1	30° Skew	14Jun2010
	-2	Notes to Designer	11Jul2008
	-3	Notes to Designer	11Jul2008
	-DGN	Microstation Drawing File	
*CS-PP-45	-1	45° Skew	14Jun2010
	-2	Notes to Designer	11Jul2008
	-3	Notes to Designer	11Jul2008
	-DGN	Microstation Drawing File	
		CONCRETE SLAB DETAILS	
*CS-10-20-0	-1	10' – 20' Spans - 0° Skew	25Jan2013
	-2	Notes to Designer	25Jan2013
	-3	Notes to Designer	25Jan2013
	-DGN	Microstation Drawing File	
*CS-10-20-30	-1	10' – 20' Spans - 30° Skew	25Jan2013
	-2	Notes to Designer	25Jan2013
	-3	Notes to Designer	25Jan2013
	-DGN	Microstation Drawing File	
*CS-10-20-45	-1	10' – 20' Spans - 45° Skew	25Jan2013
	-2	Notes to Designer	25Jan2013
	-3	Notes to Designer	25Jan2013
	-DGN	Microstation Drawing File	

*Indicates 11 x 17 sheet; all others are 8 ½ x 11.

VOLUME V – PART 6
CAST-IN-PLACE CONCRETE SLAB STANDARDS

TABLE OF CONTENTS (cont'd)

FILE NO.	TITLE		DATE
	CONCRETE SLAB DETAILS (cont'd)		
*CS-22-32-0	-1	22' – 32' Spans - 0° Skew	25Jan2013
	-2	Notes to Designer	25Jan2013
	-DGN	Microstation Drawing File	
*CS-22-32-30	-1	22' – 32' Spans - 30° Skew	25Jan2013
	-2	Notes to Designer	25Jan2013
	-DGN	Microstation Drawing File	
*CS-22-32-45	-1	22' – 32' Spans - 45° Skew	25Jan2013
	-2	Notes to Designer	25Jan2013
	-DGN	Microstation Drawing File	
	PARAPETS/RAILINGS		
*CS-P1	-1	Cast-in-Place Concrete Parapet (F-Shape)	25Jan2013
	-2	Notes to Designer	25Jan2013
	-DGN	Microstation Drawing File	
*CS-P2	-1	Cast-in-Place Concrete Parapet (F-Shape)	14Jun2010
	-2	Notes to Designer	11Jul2008
	-DGN	Microstation Drawing File	
*CS-P3	-1	Terminals Walls	25Jan2013
	-2	Notes to Designer	25Jan2013
	-DGN	Microstation Drawing File	
*CS-CR1	-1	Cast-in-Place Concrete Parapet (32" Kansas Corral)	25Jan2013
	-2	Notes to Designer	25Jan2013
	-DGN	Microstation Drawing File	
*CS-CR2	-1	Cast-in-Place Concrete Parapet (32" Kansas Corral)	14Jun2010
	-2	Notes to Designer	11Jul2008
	-DGN	Microstation Drawing File	
*CS-GR	-1	Railing (Texas T-6)	14Jun2010
	-2	Notes to Designer	11Jul2008
	-DGN	Microstation Drawing File	

*Indicates 11 x 17 sheet; all others are 8 ½ x 11.

VOLUME V – PART 6
CAST-IN-PLACE CONCRETE SLAB STANDARDS

TABLE OF CONTENTS (cont'd)

FILE NO.	TITLE	DATE
	CELLS FOR CAST-IN-PLACE CONCRETE SLAB STANDARDS	
CSCELLIND -1	Index of Cells	11Jul2008
CSCELLIND -2	Index of Cells	11Jul2008
CSCELLS -1	Cells	11Jul2008
CSCELLS -2	Cells	11Jul2008
CSCELLS -3	Cells	11Jul2008
CSCELLS -4	Cells	11Jul2008
CSCELLS -5	Cells	11Jul2008
CSCELLS -6	Cells	11Jul2008
CSCELLS -7	Cells	11Jul2008
CSCELLS -8	Cells	11Jul2008
CSCELLS -9	Cells	11Jul2008
CSCELLS -10	Cells	11Jul2008
CSCELLS -11	Cells	11Jul2008
CSCELLS -12	Cells	11Jul2008
CSCELLS -13	Cells	11Jul2008
CSCELLS -14	Cells	11Jul2008
CSCELLS -15	Cells	11Jul2008
CSCELLS -16	Cells	11Jul2008
CSCELLS -17	Cells	11Jul2008
CSCELLS -18	Cells	11Jul2008
CSCELLS -19	Cells	11Jul2008
CSCELLS -20	Cells	11Jul2008
CSCELLS -21	Cells	11Jul2008
CSCELLS -22	Cells	11Jul2008
CSCELLS -23	Cells	11Jul2008
CSCELLS -24	Cells	11Jul2008
CSCELLS -25	Cells	11Jul2008
CSCELLS -26	Cells	11Jul2008
CSCELLS -27	Cells	11Jul2008
CSCELLS -28	Cells	11Jul2008
CSCELLS -29	Cells	11Jul2008
CSCELLS -30	Cells	11Jul2008
CSCELLS -31	Cells	11Jul2008
CSCELLS -32	Cells	11Jul2008

*Indicates 11 x 17 sheet; all others are 8 ½ x 11.

VOLUME V – PART 6
CAST-IN-PLACE CONCRETE SLAB STANDARDS

TABLE OF CONTENTS (cont'd)

FILE NO.	TITLE		DATE
	CELLS FOR CAST-IN-PLACE CONCRETE SLAB STANDARDS (cont'd)		
CSCELLS	-33	Cells	11Jul2008
CSCELLS	-34	Cells	11Jul2008
CSCELLS	-35	Cells	11Jul2008
CSCELLS	-36	Cells	11Jul2008
CSCELLS	-37	Cells	11Jul2008
CSCELLS	-38	Cells	11Jul2008
CSCELLS	-39	Cells	11Jul2008
CSCELLS	-40	Cells	11Jul2008
CSCELLS	-CEL	Microstation cell library	11Jul2008

*Indicates 11 x 17 sheet; all others are 8 ½ x 11.

VIRGINIA DEPARTMENT OF TRANSPORTATION
MANUAL OF THE STRUCTURE AND BRIDGE DIVISION

VOLUME V – PART 6
CAST-IN-PLACE CONCRETE SLAB SPANS

The current details include standards for cast-in-place concrete slab spans; abutments on spread footings and piles; piers on spread footings and piles; and parapet and railing details to allow the designer to produce a set of standard plans.

Please note that these standards are limited to the following:

Design: AASHTO Standard Specifications for Highway Bridges, 16th Edition, including 1997 and 1998 Interims and VDOT Modifications.
AASHTO LRFD Bridge Design Specifications: Designer is required to check current LRFD Specifications and VDOT Modifications (see current IIM-S&B-80) for adequacy.
Capacity: HS20-44 Loading and alternate military loading (Standards are currently designed in accordance with this loading)
HL-93 (use with LRFD Specifications)

Span Type:	Simple C-I-P Concrete Slab Spans (single or multiple spans)
Span Length:	10 feet to 32 feet (end-to-end)
Capacity:	HS20-44 Loading and alternate military loading
Approach Fill Slope:	1½ : 1 or 2 : 1
Skews:	0°, 30° or 45° (right or left)
Parapets/Railings:	C-I-P Concrete Parapet (F-Shape) or Railing (Texas T-6) or C-I-P Concrete Railing (32" Kansas Corral)
Abutments/Piers:	4 feet to 14 feet height (H)
Foundations:	Spread footings: 2.5 tsf minimum Piles: 20 tons minimum

Refer to NOTES TO DESIGNER for specific comments on each standard sheet.

For CS-TS, completion of the project block, title block and lower left corner shall be in accordance with the requirements of Section Nos. 02.02, 02.04 and 02.05 of Part 2 of this manual and as specified herein. Completion of the project block, title block and lower left corner shall be in accordance with the requirements of File Nos. 04.04-1 thru -2 of Part 2 of this manual and as specified herein.

If a standard sheet is modified by the designer, the letters "MOD." (without quotes) shall be added behind the standard designation in the lower left portion of the border, e.g., PCBT-29S MOD. Completing items on the standard that are indicated in the NOTES TO DESIGNER are not considered to be modifications. Minor modifications do not require approval (except for those proposed by Concessionaire/Design-Builder where emailed approval by the District Structure and Bridge Engineer documented to the project design file is required for any modification). See Part 1 of this manual, File No. Pre.02-6 for definition of minor modification.

Modifications not considered minor as defined in File No. Pre.02-6 require email approval by the District Structure and Bridge Engineer documented to the project design file unless a design exception is required.

In general, in the title block (lower right hand corner of sheet) Designed, Drawn and Checked are blank and need to be filled in with the appropriate initials. For standard sheets without any design or detailing requirements, Designed, Drawn and Checked are filled in with "S&B DIV." If the design or details are modified, these fields should be filled in with initials as appropriate.

The standard description in the title block shall be replaced with the appropriate structural unit designation (i.e., ABUTMENTS, PIER(S), SUPERSTRUCTURE, etc.). Likewise, the assigned project plan number shall replace the standard designation in the Plan No. block.

The CADD standard slab detail sheets are located in Falcon […\PROJECTS\br-stand\sbr\cs] directory (central office environment). The drawing file name for the standard sheet corresponds with the file number (name of standard sheet) as listed in the Table of Contents (minus the dash). For example, standard CS-TS is drawing csts.dgn.

A cell library (cs.cel) is included with the standards to allow the designer to modify/replace details on the standard sheets. The CSCELLS-series sheets included herein depict the cells found in the cell library along with the name of the cell, an image of the cell, a description of the cell and the origin of cell. The origin of cell is indicated by a star ★. To attach the cell library, use the pull down menu in MicroStation under ELEMENT – CELLS and select FILE to get a drop-down listing of available cell libraries.

CAST-IN-PLACE CONCRETE SLAB SPANS

PLAN ASSEMBLY

For a complete plan assembly the following standard sheets will be required:

0° SKEW

CS-TS	Title sheet ((Required for every structure))
CS-EST	Estimated Quantities and Index of sheets ((Required for every structure))
CS-A15-0	Abutments ((Required for spread footing and approach fill slopes are 1 ½ : 1))
CS-A2-0	Abutments ((Required for spread footing and approach fill slopes are 2 : 1))
CS-APL15-0	Abutments ((Required for pile footing and approach fill slopes are 1 ½ : 1))
CS-APL2-0	Abutments ((Required for pile footing and approach fill slopes are 2 : 1))
CS-P-0	Piers ((Required for more then one span and spread footing))
CS-PP-0	Piers on piles ((Required for more then one span and pile footing))

CS-10-20-0
CS-22-32-0
~~CS-22V-32V-0~~

((Based on span length and type of superstructure, pick the appropriate slab detail drawing.))

CS-P1	Concrete parapet (F-Shape)- sheet 1
CS-P2	Concrete parapet (F-Shape)- sheet 2
CS-P3	Concrete parapet (F-Shape)- sheet 3
CS-CR1	32” Kansas Corral Railing – sheet 1
CS-CR-2	32” Kansas Corral Railing – sheet 2
CS-GR	Railing (Texas T-6)

((Based on railing type selected include the appropriate drawings.))

30° SKEW

CS-TS	Title sheet ((Required for every structure))
CS-EST	Estimated Quantities and Index of sheets ((Required for every structure))
CS-A15-30	Abutments ((Required for spread footing and approach fill slopes are 1 ½ : 1))
CS-A2-30	Abutments ((Required for spread footing and approach fill slopes are 2 : 1))
CS-APL15-30	Abutments ((Required for pile footing and approach fill slopes are 1 ½ : 1))
CS-APL2-30	Abutments ((Required for pile footing and approach fill slopes are 2 : 1))
CS-P-30	Piers ((Required for more then one span and spread footing))
CS-PP-30	Piers on piles ((Required for more then one span and pile footing))

CS-10-20-30
CS-22-32-30
~~CS-22V-32V-30~~

((Based on span length and type of superstructure, pick the appropriate slab detail drawing.))

CS-P1	Concrete parapet (F-Shape)- sheet 1
CS-P2	Concrete parapet (F-Shape)- sheet 2
CS-P3	Concrete parapet (F-Shape)- sheet 3
CS-CR1	32” Kansas Corral Railing – sheet 1
CS-CR-2	32” Kansas Corral Railing – sheet 2
CS-GR	Railing (Texas T-6)

((Based on railing type selected include the appropriate drawings.))

CAST-IN-PLACE CONCRETE SLAB SPANS

PLAN ASSEMBLY

45° SKEW

CS-TS	Title sheet ((Required for every structure))
CS-EST	Estimated Quantities and Index of sheets ((Required for every structure))
CS-A15-45	Abutments ((Required for spread footing and approach fill slopes are 1 ½ : 1))
CS-A2-45	Abutments ((Required for spread footing and approach fill slopes are 2 : 1))
CS-APL15-45	Abutments ((Required for pile footing and approach fill slopes are 1 ½ : 1))
CS-APL2-45	Abutments ((Required for pile footing and approach fill slopes are 2 : 1))
CS-P-45	Piers ((Required for more then one span and spread footing))
CS-PP-45	Piers on piles ((Required for more then one span and pile footing))

CS-10-20-45
CS-22-32-45
~~CS-22V-32V-45~~

((Based on span length and type of superstructure, pick the appropriate slab detail drawing.))

CS-P1	Concrete parapet (F-Shape)- sheet 1
CS-P2	Concrete parapet (F-Shape)- sheet 2
CS-P3	Concrete parapet (F-Shape)- sheet 3
CS-CR1	32” Kansas Corral Railing – sheet 1
CS-CR-2	32” Kansas Corral Railing – sheet 2
CS-GR	Railing (Texas T-6)

((Based on railing type selected include the appropriate drawings.))

For external users, the CADD standard detail sheets are attached to the PDF files for each drawing located on VDOT's Structure and Bridge Division website. The user will need Adobe Reader version 7.0 or higher to be able to access the files. Either click on the DGN link in the table of contents or click on the attachment tab in the PDF file for each standard sheet.

Using either method, the screen will appear similar to that shown below.

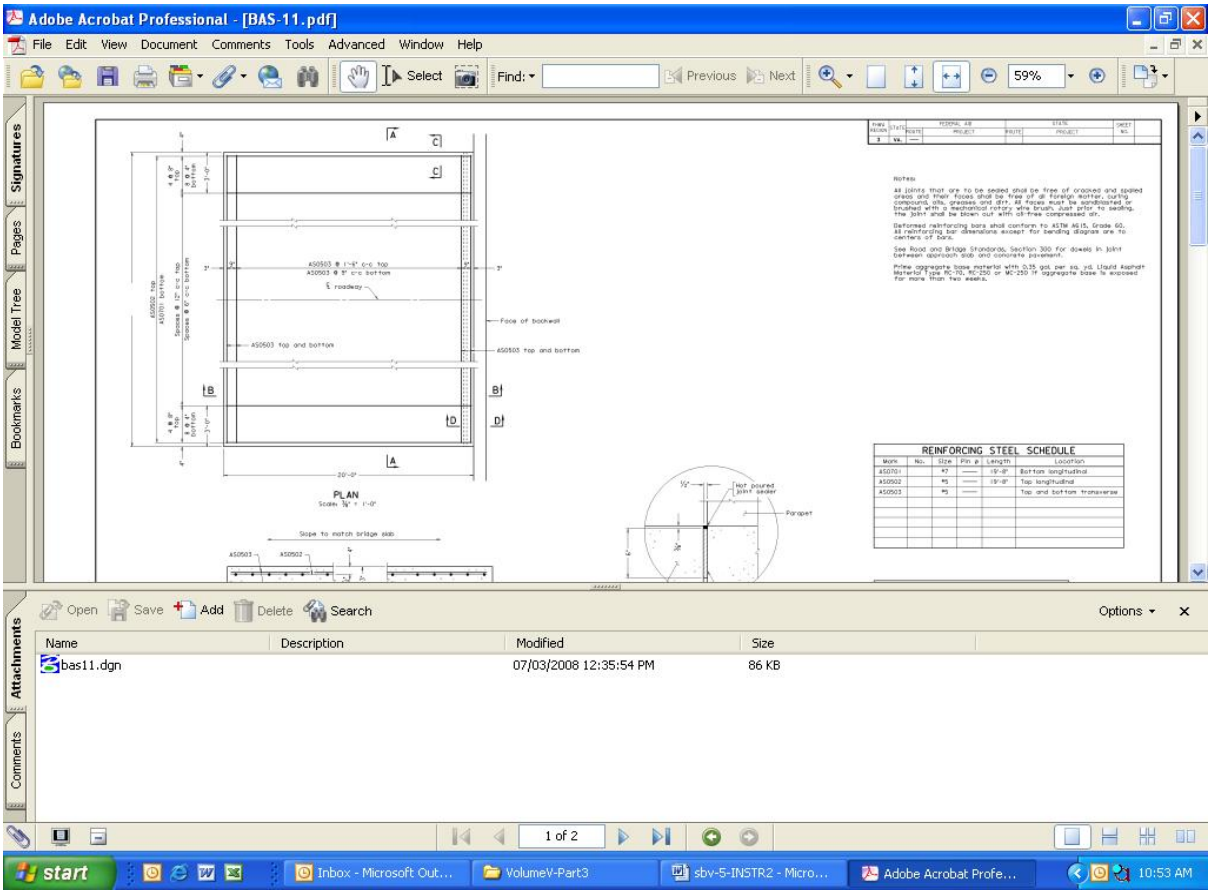

By left clicking on the icon, the following menu will appear:

Users may then save the file to their computer.

For accessing the cell library, click on CEL link in the table of contents.

To simplify printing of this manual, a PDF of the complete manual in one PDF file with no links may be accessed by clicking on the link below.

Full manual no links

If the printer has both 8 ½ x 11 and 11 x 17 paper sizes available, the drawings and notes to designer may be printed on the correct paper size by placing a check next to the item "Choose Paper Source by PDF page size" as shown in the dialog below:

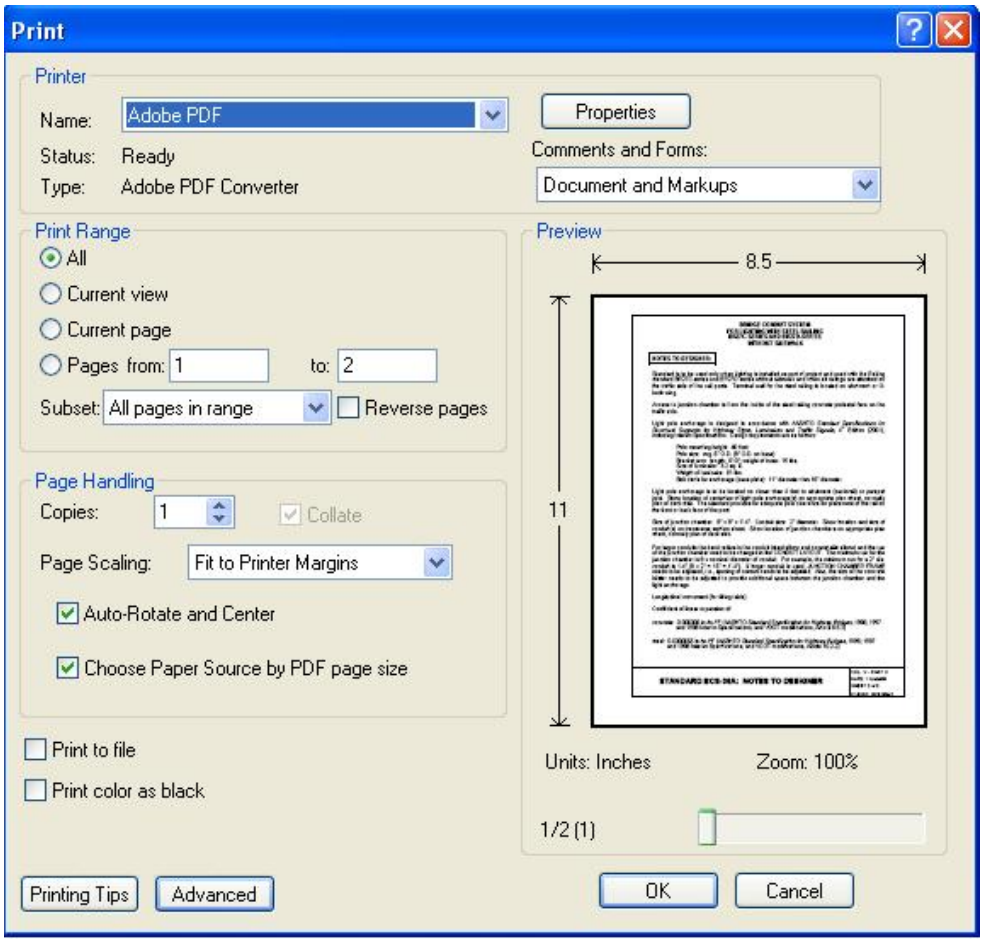

If the printer only has 8 ½ x 11 paper, the drawings will default to the reduced paper size.

Depending on the printer margins, the 11 x 17 drawing(s) may not be true half-size drawing(s).

STATE	FEDERAL AID ROUTE	FEDERAL AID PROJECT	STATE ROUTE	STATE PROJECT	SHEET NO.
VA.	—				

NBIS Number:

Federal Oversight Code:

UPC No.

FHWA Construction and Scour Code:

DESIGN EXCEPTION(S):

GENERAL NOTES:

The original approved sheet, including original signatures is filed in the VDOT Central Office. Any misuse of electronic files is illegal. Violators will be prosecuted to the full extent of applicable laws.

Width: ' - " face-to-face of curbs (rails).

Span layout: ft. reinforced concrete slab spans.

Capacity: HL-93 loading.

Drainage area: sq. mi.

Specifications:

Construction: Virginia Department of Transportation Road and Bridge Specifications, 2007.
Design: AASHTO LRFD Bridge Design Specifications, 4th Edition, 2007; 2008 and 2009 Interim Specifications; and VDOT Modifications.
Standards: Virginia Department of Transportation Road and Bridge Standards, 2008.

These plans are incomplete unless accompanied by the Supplemental Specifications and Special Provisions included in the contract documents.

This project is to be constructed in accordance with the Virginia Department of Transportation Work Area Protection Manual, June 2011 and latest revisions.

Concrete in the superstructure including parapets/railings and terminal walls shall be Class A4; in piers, Class A3 and in abutments, Class B2.

All reinforcing steel shall be deformed and shall conform to ASTM A615 Grade 60 except for reinforcing steels noted as CRR (corrosion resistant reinforcement) which shall conform to the applicable specifications noted in the special provisions. All reinforcing bar dimensions on the detailed drawings are to centers of bars except where otherwise noted and are subject to fabrication and construction tolerances.

Corrosion resistant reinforcing (CRR) steels shall conform to one or more of the three Classes listed in the special provision. The minimum yield strength shall be: 100 ksi for low carbon/chromium steel and 60 ksi for stainless clad steel or solid stainless steel. The Class(es) of CRR steel(s) required on this project is/are noted on plan sheets and in the reinforcing steel schedule. Corrosion Resistant Reinforcing Steel, Class II or Class III, may be substituted for Class I. Corrosion Resistant Reinforcing Steel, Class III, may be substituted for Class II.

(Insert applicable foundation note).

B. M.:

PLAN

DEVELOPED SECTION ALONG (℄) or (℄)

csts.dgn

01-25-2013

CS-TS

BRIDGE DATA			
Description	Data		Standards Required
Overall bridge length (end-to-end of slab)	L =		CS-TS
Skew Angle	∡ =		——
Fill Slope	: 1		——
Superstructure	R =		
Parapet / Railing Type			
Abutments	A	H =	
	B	H =	
Piers	1	H =	
	2	H =	
	3	H =	

R = Width of ROADWAY SECTION

Not to scale

VDOT S&B DIVISION
RICHMOND, VA
STRUCTURAL ENGINEER

PLANS BY:
COORDINATED:
SUPERVISED:
DESIGNED:
DRAWN:
CHECKED:

No.	Description	Date

REVISIONS

For Table of Revisions, see Sheet 2.

VDOT

COMMONWEALTH OF VIRGINIA
DEPARTMENT OF TRANSPORTATION
PROPOSED BRIDGE ON

Recommended for Approval: _____ State Structure and Bridge Engineer Date

Approved: _____ Chief Engineer Date

Date: _____

© 2013, Commonwealth of Virginia

CAST-IN-PLACE CONCRETE SLAB SPANS

TITLE SHEET

NOTES TO DESIGNER:

This sheet will serve as the title sheet and should be included in all plan assemblies.

For these standard details, R = Width of ROADWAY SECTION (Feet). R is defined as the width of the approach roadway plus appropriate shoulder widths. Refer to roadway plans and Manual of the Structure and Bridge Division, Volume V – Part 2, Chapter 6 – Geometrics.

ADD THE FOLLOWING NOTES, DIMENSIONS, DETAILS, ETC. TO STANDARD:

PROJECT/TITLE BLOCKS:

Project block and title block shall be completed in accordance with Manual of the Structure and Bridge Division, Volume V – Part 2, Chapter 2.

PLAN and DEVELOPED SECTION:

Add the project specific PLAN and DEVELOPED SECTION views in accordance with Manual of the Structure and Bridge Division, Volume V – Part 2, Chapter 2. Add north arrow proper orientation. The designer may use the PLAN view cells provided in the cell library.

GENERAL NOTES:

Enter width, span layout and benchmark description. Compute and enter the drainage area, if applicable.

Select applicable reinforcing steel note(s) from GENERAL NOTES in Manual of the Structure and Bridge Division, Volume V - Part 2, Chapter 2.

Select the following applicable foundation note and add to the GENERAL NOTES where denoted:

- Piles (in _____) have a design capacity of 20 tons per pile minimum.
- Footings for (_____) shall bear on (firm material) (weathered rock) (competent bedrock). Footings for (_____) have been designed for an allowable bearing pressure of 2.5 tons/sq. ft. min.

BRIDGE DATA:

Enter the following project specific data in the BRIDGE DATA table:

L = Overall bridge length in feet (end-to-end of slab)
Skew Angle : (0°, 30° or 45°)
Roadway Fill Slope : (1½ : 1 or 2 : 1)
R = Width of ROADWAY SECTION (feet):
Parapet/Railing Type : C-I-P Concrete Parapet (F-Shape) or
Railing (Texas T-6) or
C-I-P Concrete Parapet (32" Kansas Corral)
H = Height (feet) of substructure units. Refer to abutment or pier details for this data.

STATE	FEDERAL AID ROUTE	FEDERAL AID PROJECT	STATE ROUTE	STATE PROJECT	SHEET NO.
VA.	—				

ESTIMATED QUANTITIES - SUBSTRUCTURE ONLY

		Concrete * CY Class A3	Concrete * CY Class B2	Reinforcing Steel LB	Struct. Excav. ⊗ CY	Pile (Type) LF
Abutment A	Neat	—				—
	Footing	—				
Pier	Neat		—			—
	Footing		—			
Abutment B	Neat	—				—
	Footing	—				
Total						

⊗ Denotes items to be paid for on the basis of plan quantities in accordance with current Road and Bridge Specifications.

* Low permeability concrete shall be used for the construction of the entire structure.

ESTIMATED QUANTITIES - SUPERSTRUCTURE ONLY

Item	Units	Quantity
Concrete Class A4 *	CY	
Corrosion Resistant Reinforcing Steel, Class ___ ⊗	LB	
Concrete Parapet ⊗ *	LF	
Railing, (type) ⊗	LF	
Bridge Deck Grooving ⊗	SY	

⊗ Denotes items to be paid for on the basis of plan quantities in accordance with current Road and Bridge Specifications.

* Low permeability concrete shall be used for the construction of the entire structure.

LUMP SUM BID ITEMS

Mobilization	LS
Construction Surveying	LS

MISCELLANEOUS / ROAD ITEMS

Item	Units	Quantity

⊗ Denotes items to be paid for on the basis of plan quantities in accordance with current Road and Bridge Specifications.

INDEX OF SHEETS

Sheet No.	Description
1	Title sheet: Plan, profile and general notes
2	Estimated quantities and index of sheets
3	
4	
5	
6	
7	
8	
9	
10	
11	
12	
13	
14	
15	
16	
17	
18	
19	
20	
21	
22	
23	
24	
25	

Rev. No.	Sheets Revised	Date

TABLE OF REVISIONS

csest.dgn

01-25-2013

CS-EST

VDOT S&B DIVISION
RICHMOND, VA
STRUCTURAL ENGINEER

No.	Description	Date

Revisions

©2013, Commonwealth of Virginia

COMMONWEALTH OF VIRGINIA
DEPARTMENT OF TRANSPORTATION

STRUCTURE AND BRIDGE DIVISION

ESTIMATED QUANTITIES
INDEX OF SHEETS

Designed: .....
Drawn: .....
Checked: .....

Date

Plan No. CS-EST

Sheet No.

CAST-IN-PLACE CONCRETE SLAB SPANS

ESTIMATED QUANTITIES AND INDEX OF SHEETS

NOTES TO DESIGNER:

ESTIMATED QUANTITIES:

Complete the ESTIMATED QUANTITIES tables in accordance with Manual of the Structure and Bridge Division, Volume V – Part 2, Chapter 3. Complete superstructure reinforcement pay item by adding the Class I, II or III of corrosion resistant reinforcing steel required. For additional information on corrosion resistant reinforcing steels (CRR), see Structure and Bridge Division Memorandum (current IIM-S&B-81). Additional Lump sum (i.e. Mobilization, Construction Surveying, Dismantle and Remove Existing Structure, etc.) pay items may also be required for project specific requirements.

Additional items may be required for maintenance of traffic, cofferdams for construction of abutments and/or piers and environmental items such as silt fence, siltation excavation and dewatering basin. Roadway items may also be required for bridge approaches and will have to be accounted for on this sheet.

INDEX OF SHEETS:

Complete the INDEX OF SHEETS in accordance with Manual of the Structure and Bridge Division, Volume V – Part 2, Chapter 3.

SUBSTRUCTURE LAYOUT:

If a substructure layout is required, it should be shown on this sheet.

STATE	FEDERAL AID ROUTE	FEDERAL AID PROJECT	STATE ROUTE	STATE PROJECT	SHEET NO.
VA.	—				

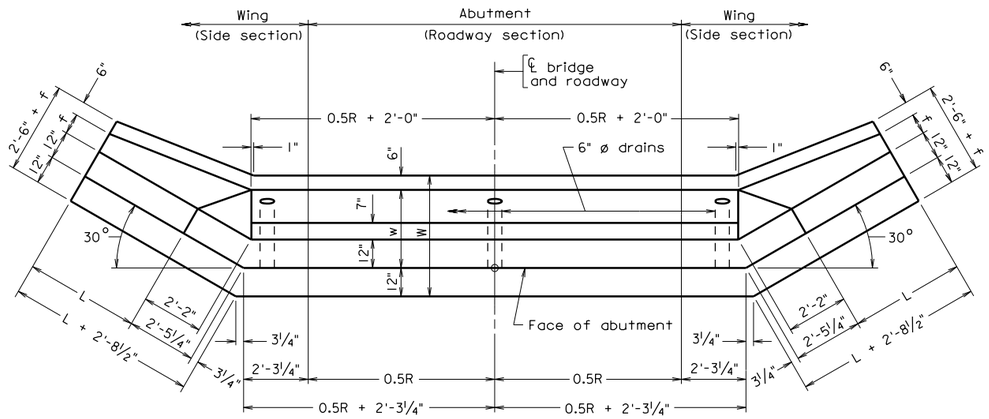

PLAN

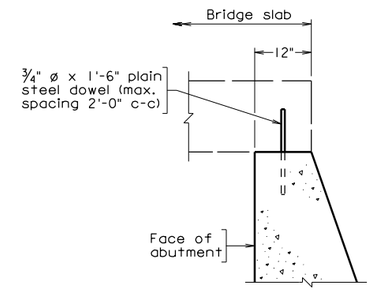

TYPICAL BRIDGE SEATS

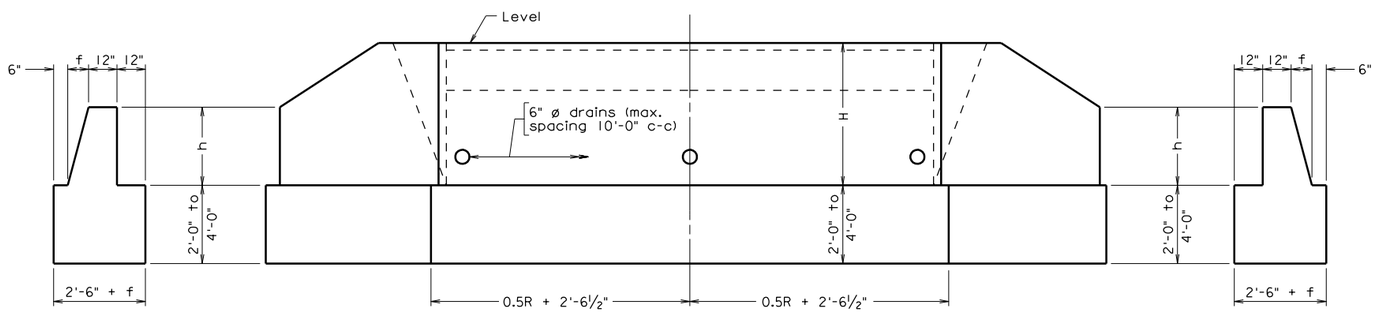

FRONT ELEVATION

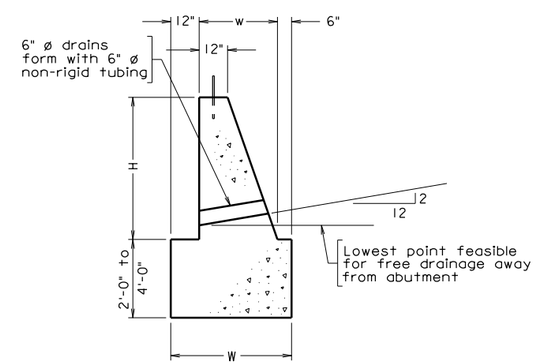

SECTION ON ℄

DIMENSION DATA
H =
L =
R =
W =
h =
f =
w =

Not to scale

©2010, Commonwealth of Virginia

csa150.dgn

06-14-2010

CS-A15-0

Sealed and Signed by:
Julius F.J. Volgyi Jr.
Lic. No. 010487
On the date of
June 14, 2010

A copy of the original sealed and signed standard drawing is on file in the Central Office.

VDOT S&B DIVISION
RICHMOND, VA
STRUCTURAL ENGINEER

No.	Description	Date
	Revisions	

COMMONWEALTH OF VIRGINIA
DEPARTMENT OF TRANSPORTATION

STRUCTURE AND BRIDGE DIVISION

ABUTMENTS

Designed: .....
Drawn: .....
Checked: .....

Date	Plan No.	Sheet No.
	CS-A15-0	

CAST-IN-PLACE CONCRETE SLAB SPANS

ABUTMENTS
0° SKEW – FILL SLOPE 1½ : 1

NOTES TO DESIGNER:

Standard to be used when abutments are on spread footings.

Standard is for: 0° skew
1½ : 1 fill slope

TABLE OF DIMENSIONS AND QUANTITIES									
ABUTMENT*					2-WINGS				
H	w	W	Neat – CY per ft. of R	12” Ftg – CY per ft. of R	L	h	f	Neat CY	12” Footing CY
4’-0”	2’-4”	3’-10”	0.260R	0.142R	3’-0”	2’-3”	6 3/8”	3.3	1.9
5’-0”	2’-9”	4’-3”	0.360R	0.157R	4’-0”	2’-9”	8 3/4"	5.1	2.3
6’-0”	3’-2”	4’-8”	0.475R	0.173R	5’-0”	3’-0”	10 1/8"	7.3	2.8
7’-0”	3’-7”	5’-1”	0.606R	0.188R	6’-0”	3’-6”	1’-0 1/2”	10.0	3.2
8’-0”	3’-11”	5’-5”	0.740R	0.201R	7’-0”	4’-0”	1’-2 3/8”	13.1	3.7
9’-0”	4’-4”	5’-10”	0.901R	0.216R	8’-0”	4’-6”	1’-4 3/4”	17.0	4.3
10’-0”	4’-9”	6’-3”	1.076R	0.232R	9’-0”	4’-9”	1’-6 1/4”	21.2	4.3
11’-0”	5’-2”	6’-8”	1.267R	0.247R	11’-0”	4’-9”	1’-6 5/8”	27.1	5.8
12’-0”	5’-7”	7’-1”	1.474R	0.262R	12’-0”	5’-0”	1’-8”	32.8	6.5
13’-0”	5’-11”	7’-5”	1.676R	0.275R	13’-0”	5’-6”	1’-9 7/8”	39.1	7.2
14’-0”	6’-4”	7’-10”	1.912R	0.290R	14’-0”	6’-0”	2’-0 1/4”	46.6	7.9

* To compute concrete quantity of the abutment, multiply volume as tabulated by R.

ADD THE FOLLOWING NOTES, DIMENSIONS, DETAILS, ETC. TO STANDARD:

PROJECT/TITLE BLOCKS:

Project block and title block shall be completed in accordance with Manual of the Structure and Bridge Division, Volume V – Part 2, Chapter 4.

DIMENSION DATA:

Enter H, L, R, W, h, f, and w dimensions in the DIMENSION DATA table.

TYPICAL BRIDGE SEATS:

If approach slab is required, replace details with cell BSA.

CAST-IN-PLACE CONCRETE SLAB SPANS

ABUTMENTS
0° SKEW – FILL SLOPE 1½ : 1

NOTES TO DESIGNER(cont'd):

SECTION ON CENTERLINE:

If approach slab is required, replace details with cell PT4A.

STATE	FEDERAL AID ROUTE	FEDERAL AID PROJECT	STATE ROUTE	STATE PROJECT	SHEET NO.
VA.	—				

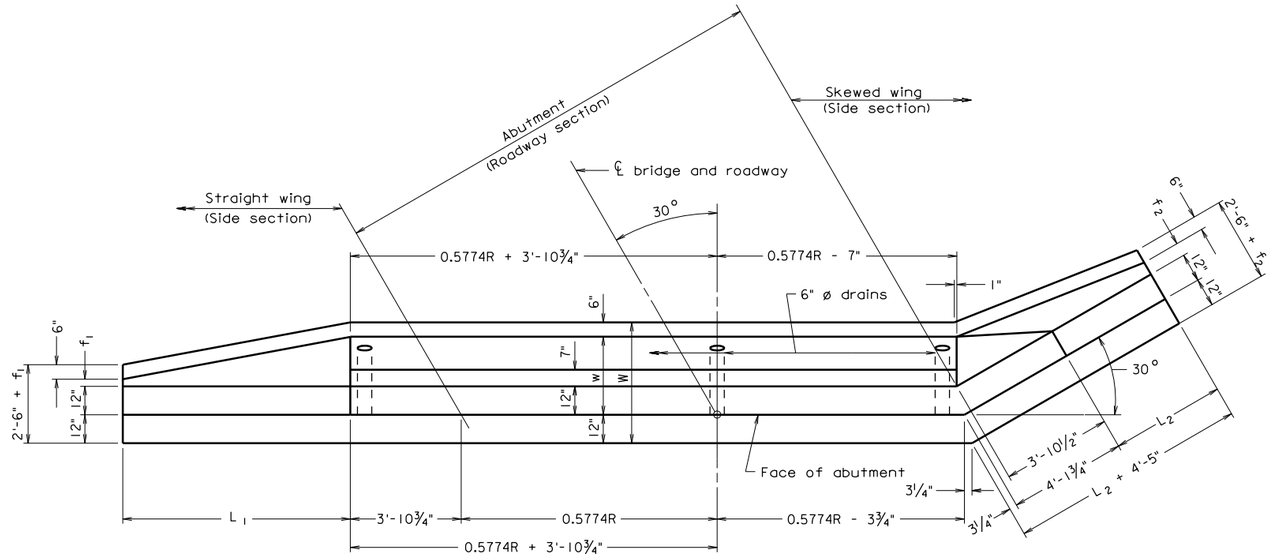

PLAN

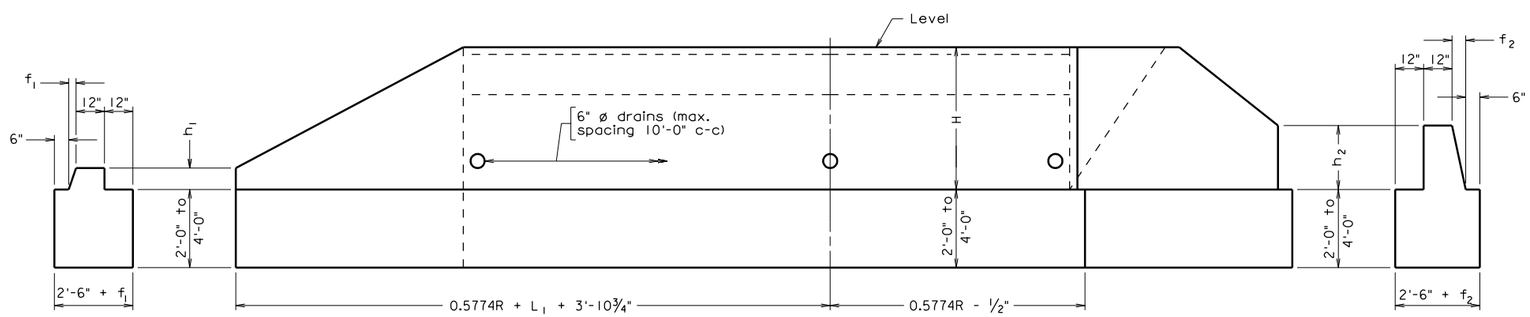

FRONT ELEVATION

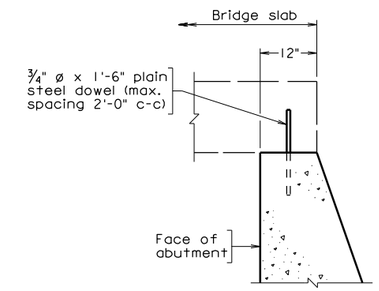

TYPICAL BRIDGE SEATS

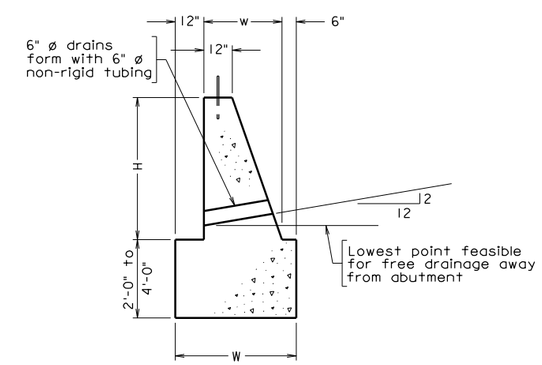

SECTION ON ℄

DIMENSION DATA
H =
L_1 =
L_2 =
R =
W =
f_1 =
f_2 =
h_1 =
h_2 =
w =

csa1530.dgn

CS-A15-30 06-14-2010

Sealed and Signed by:
Julius F.J. Volgyi Jr.
Lic. No. 010487
On the date of
June 14, 2010

A copy of the original sealed and signed standard drawing is on file in the Central Office.

VDOT S&B DIVISION
RICHMOND, VA
STRUCTURAL ENGINEER

Not to scale

©2010, Commonwealth of Virginia

No.	Description	Date
	Revisions	

COMMONWEALTH OF VIRGINIA
DEPARTMENT OF TRANSPORTATION

STRUCTURE AND BRIDGE DIVISION

ABUTMENTS

Designed: .....
Drawn: .....
Checked: .....

Date	Plan No.	Sheet No.
	CS-A15-30	

CAST-IN-PLACE CONCRETE SLAB SPANS

ABUTMENTS
30° SKEW – FILL SLOPE 1½ : 1

NOTES TO DESIGNER:

Standard to be used when abutments are on spread footings.

Standard is for: 30° skew
1½ : 1 fill slope

TABLE OF DIMENSIONS AND QUANTITIES

ABUTMENT*					STRAIGHT WING				
H	w	W	Neat – CY per ft. of R	12” Ftg – CY per ft. of R	L_1	h_1	f_1	Neat CY	12” Footing CY
4’-0”	2’-4”	3’-10”	0.301R	0.164R	6’-0”	9”	3”	1.9	1.2
5’-0”	2’-9”	4’-3”	0.416R	0.182R	8’-0”	9”	3 1/8"	2.9	1.5
6’-0”	3’-2”	4’-8”	0.540R	0.200R	9’-0”	9”	3 1/4"	4.0	1.8
7’-0”	3’-7”	5’-1”	0.700R	0.217R	11’-0”	9”	3 3/8”	5.6	2.2
8’-0”	3’-11”	5’-5”	0.855R	0.232R	13’-0”	9”	3 3/8”	7.4	2.5
9’-0”	4’-4”	5’-10”	1.040R	0.249R	14’-0”	9”	3 3/8”	9.2	2.8
10’-0”	4’-9”	6’-3”	1.243R	0.267R	16’-0”	9”	3 3/8”	11.6	3.3
11’-0”	5’-2”	6’-8”	1.464R	0.285R	18’-0”	9”	3 3/8”	14.4	3.8
12’-0”	5’-7”	7’-1”	1.702R	0.303R	20’-0”	9”	3 3/8”	17.6	4.3
13’-0”	5’-11”	7’-5”	1.936R	0.317R	21’-0”	9”	3 3/8”	20.4	4.6
14’-0”	6’-4”	7’-10”	2.208R	0.335R	23’-0”	9”	3 3/8”	24.3	5.2

SKEWED WING					
H	L_2	h_2	f_2	Neat CY	12” Footing CY
4’-0”	3’-0”	2’-0”	4 1/2”	1.3	0.9
5’-0”	4’-0”	2’-3”	5 3/4"	1.9	1.2
6’-0”	5’-0”	2’-9”	7 7/8"	2.7	1.4
7’-0”	6’-0”	3’-0”	9 1/4”	3.7	1.7
8’-0”	7’-0”	3’-3”	10 1/4”	4.8	1.9
9’-0”	8’-0”	3’-9”	1’-0 3/8”	6.3	2.3
10’-0”	9’-0”	4’-0”	1’-1 3/4"	7.9	2.6
11’-0”	10’-0”	4’-3”	1’-3 1/8”	9.7	2.9
12’-0”	11’-0”	4’-9”	1’-5 3/8”	12.0	3.3
13’-0”	12’-0”	5’-0”	1’-6 3/8”	14.3	3.7
14’-0”	13’-0”	5’-3”	1’-7 5/8”	17.0	4.1

* To compute concrete quantity of the abutment, multiply volume as tabulated by R.

CAST-IN-PLACE CONCRETE SLAB SPANS

ABUTMENTS
30° SKEW – FILL SLOPE 1½ : 1

NOTES TO DESIGNER(cont'd):

ADD THE FOLLOWING NOTES, DIMENSIONS, DETAILS, ETC. TO STANDARD:

PROJECT/TITLE BLOCKS:

Project block and title block shall be completed in accordance with Manual of the Structure and Bridge Division, Volume V – Part 2, Chapter 4.

DIMENSION DATA:

Enter H, L_1, L_2, R, W, h_1, h_2, f_1, f_2, and w dimensions in the DIMENSION DATA table.

TYPICAL BRIDGE SEATS:

If approach slab is required, replace details with cell BSA.

SECTION ON CENTERLINE:

If approach slab is required, replace details with cell PT4A.

STATE	FEDERAL AID ROUTE	FEDERAL AID PROJECT	STATE ROUTE	STATE PROJECT	SHEET NO.
VA.	—				

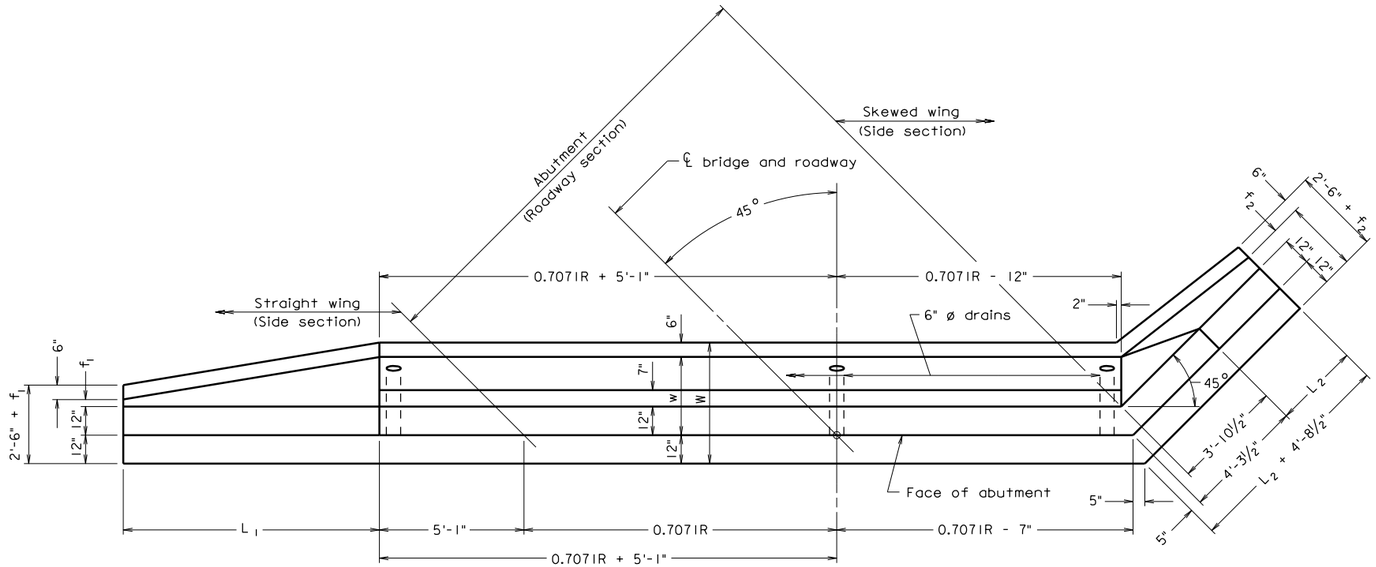

PLAN

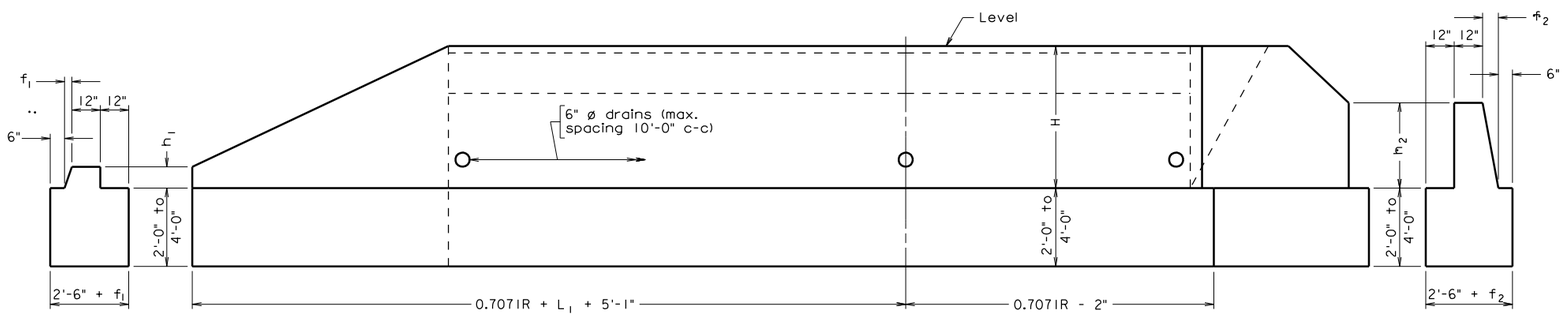

FRONT ELEVATION

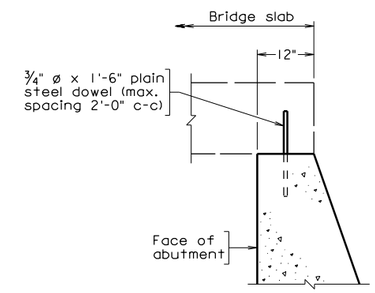

TYPICAL BRIDGE SEATS

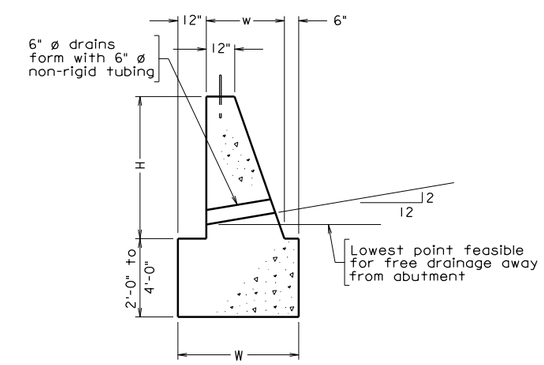

SECTION ON ℄

DIMENSION DATA
H =
L_1 =
L_2 =
R =
W =
f_1 =
f_2 =
h_1 =
h_2 =
w =

csa1545.dgn

CS-A15-45 06-14-2010

Sealed and Signed by:
Julius F.J. Volgyl Jr.
Lic. No. 010487
On the date of
June 14, 2010

A copy of the original sealed and signed standard drawing is on file in the Central Office.

VDOT S&B DIVISION
RICHMOND, VA
STRUCTURAL ENGINEER

Not to scale

©2010, Commonwealth of Virginia

No.	Description	Date
	Revisions	

COMMONWEALTH OF VIRGINIA
DEPARTMENT OF TRANSPORTATION

STRUCTURE AND BRIDGE DIVISION

ABUTMENTS

Designed: .....
Drawn: .....
Checked: .....

Date	Plan No.	Sheet No.
	CS-A15-45	

CAST-IN-PLACE CONCRETE SLAB SPANS

ABUTMENTS
45° SKEW – FILL SLOPE 1½ : 1

NOTES TO DESIGNER:

Standard to be used when abutments are on spread footings.

Standard is for: 45° skew
1½ : 1 fill slope

TABLE OF DIMENSIONS AND QUANTITIES

ABUTMENT*					STRAIGHT WING				
H	w	W	Neat – CY per ft. of R	12" Ftg – CY per ft. of R	L_1	h_1	f_1	Neat CY	12" Footing CY
4'-0"	2'-4"	3'-10"	0.368R	0.201R	7'-0"	9"	3"	2.3	1.4
5'-0"	2'-9"	4'-3"	0.509R	0.223R	9'-0"	9"	3 1/8"	3.4	1.8
6'-0"	3'-2"	4'-8"	0.672R	0.244R	11'-0"	9"	3 1/4"	4.8	2.1
7'-0"	3'-7"	5'-1"	0.857R	0.266R	13'-0"	9"	3 1/4"	6.5	2.5
8'-0"	3'-11"	5'-5"	1.047R	0.284R	16'-0"	9"	3 1/4"	8.8	3.1
9'-0"	4'-4"	5'-10"	1.274R	0.306R	18'-0"	9"	3 3/8"	11.1	3.5
10'-0"	4'-9"	6'-3"	1.522R	0.327R	20'-0"	9"	3 3/8"	13.7	4.0
11'-0"	5'-2"	6'-8"	1.792R	0.349R	22'-0"	9"	3 3/8"	16.7	4.5
12'-0"	5'-7"	7'-1"	2.085R	0.371R	24'-0"	9"	3 3/8"	20.0	5.0
13'-0"	5'-11"	7'-5"	2.371R	0.389R	26'-0"	9"	3 3/8"	23.6	5.5
14'-0"	6'-4"	7'-10"	2.705R	0.410R	28'-0"	9"	3 3/8"	27.6	6.1

SKEWED WING					
H	L_2	h_2	f_2	Neat CY	12" Footing CY
4'-0"	2'-0"	2'-9"	5 3/8"	1.1	0.9
5'-0"	3'-0"	3'-0"	6 5/8"	1.7	1.1
6'-0"	4'-0"	3'-3"	7 7/8"	2.4	1.3
7'-0"	5'-0"	3'-9"	9 7/8"	3.3	1.6
8'-0"	6'-0"	4'-0"	10 3/4"	4.3	1.9
9'-0"	7'-0"	4'-3"	12"	5.5	2.2
10'-0"	7'-0"	5'-3"	1'-3 3/8"	6.6	2.4
11'-0"	8'-0"	5'-9"	1'-5 1/2"	8.3	2.7
12'-0"	9'-0"	6'-0"	1'-6 3/4"	10.1	3.1
13'-0"	10'-0"	6'-3"	1'-7 5/8"	12.0	3.4
14'-0"	11'-0"	6'-9"	1'-9 3/4"	14.5	3.9

* To compute concrete quantity of the abutment, multiply volume as tabulated by R.

CAST-IN-PLACE CONCRETE SLAB SPANS

ABUTMENTS
45° SKEW – FILL SLOPE 1½ : 1

NOTES TO DESIGNER(cont'd):

ADD THE FOLLOWING NOTES, DIMENSIONS, DETAILS, ETC. TO STANDARD:

PROJECT/TITLE BLOCKS:

Project block and title block shall be completed in accordance with Manual of the Structure and Bridge Division, Volume V – Part 2, Chapter 4.

DIMENSION DATA:

Enter H, L_1, L_2, R, W, h_1, h_2, f_1, f_2, and w dimensions in the DIMENSION DATA table.

TYPICAL BRIDGE SEATS:

If approach slab is required, replace details with cell BSA.

SECTION ON CENTERLINE:

If approach slab is required, replace details with cell PT4A.

STATE	FEDERAL AID ROUTE	FEDERAL AID PROJECT	STATE ROUTE	STATE PROJECT	SHEET NO.
VA.	—				

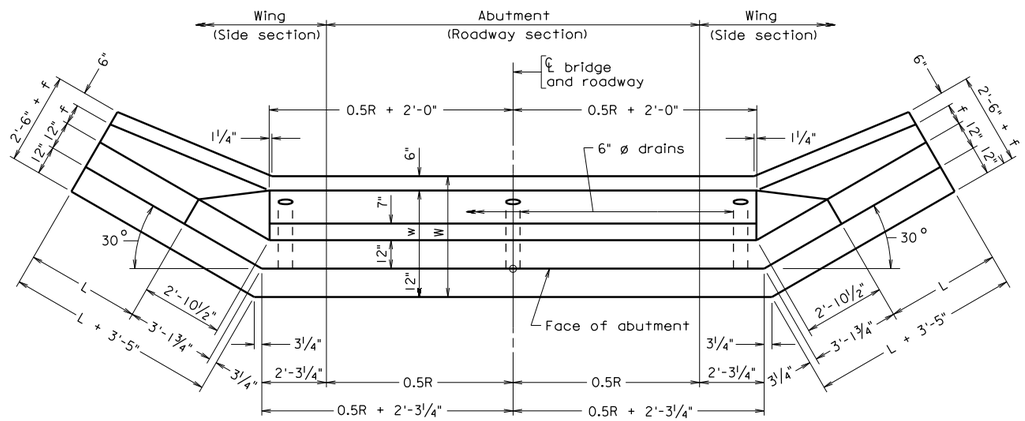

PLAN

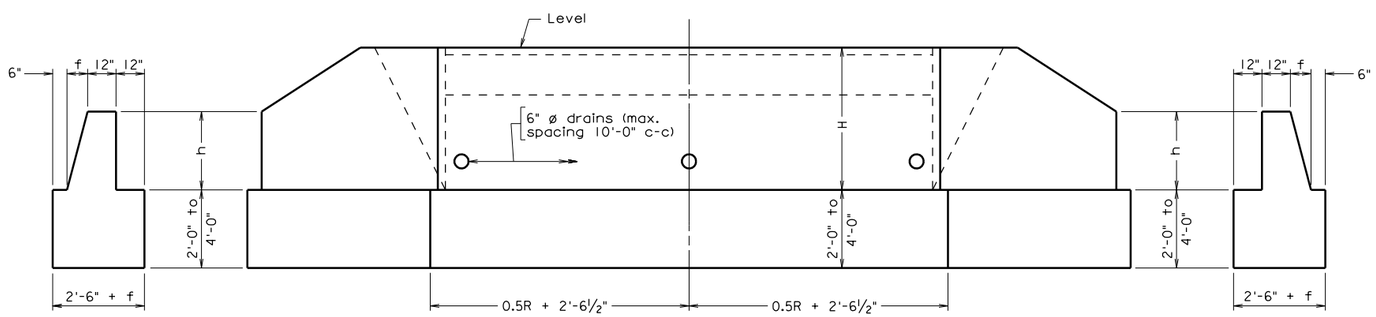

FRONT ELEVATION

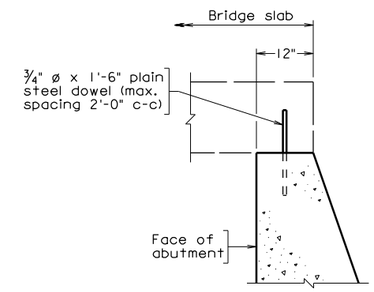

TYPICAL BRIDGE SEATS

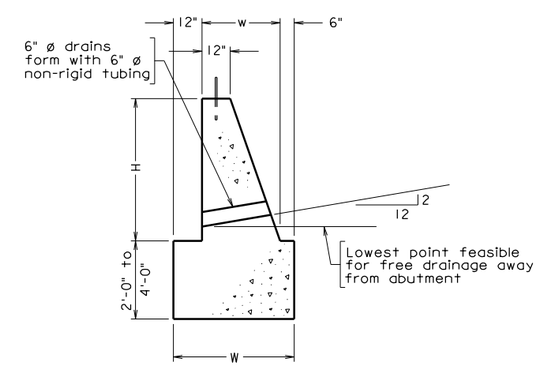

SECTION ON ℄

DIMENSION DATA
H =
L =
R =
W =
f =
h =
w =

csa20.dgn

06-14-2010

CS-A2-0

Sealed and Signed by:
Julius F.J. Volgyi Jr.
Lic. No. 010487
On the date of
June 14, 2010

A copy of the original sealed and signed standard drawing is on file in the Central Office.

VDOT S&B DIVISION
RICHMOND, VA
STRUCTURAL ENGINEER

Not to scale

©2010, Commonwealth of Virginia

No.	Description	Date
	Revisions	

COMMONWEALTH OF VIRGINIA
DEPARTMENT OF TRANSPORTATION

STRUCTURE AND BRIDGE DIVISION

ABUTMENTS

Designed: .....
Drawn: .....
Checked: .....

Date	Plan No.	Sheet No.
	CS-A2-0	

CAST-IN-PLACE CONCRETE SLAB SPANS

ABUTMENTS
0° SKEW – FILL SLOPE 2 : 1

NOTES TO DESIGNER:

Standard to be used when abutments are on spread footings.

Standard is for: 0° skew
2 : 1 fill slope

TABLE OF DIMENSIONS AND QUANTITIES									
ABUTMENT*					2-WINGS				
H	w	W	Neat – CY per ft. of R	12” Ftg – CY per ft. of R	L	h	f	Neat CY	12” Footing CY
4’-0”	2’-4”	3’-10”	0.260R	0.142R	4’-0”	2’-3”	6 $^{1}/_{4}$”	3.9	2.3
5’-0”	2’-9”	4’-3”	0.360R	0.157R	5’-0”	2’-9”	8 $^{1}/_{2}$"	5.9	2.8
6’-0”	3’-2”	4’-8”	0.475R	0.173R	7’-0”	3’-0”	10"	8.9	3.5
7’-0”	3’-7”	5’-1”	0.606R	0.188R	8’-0”	3’-6”	1’-0 $^{1}/_{4}$”	12.0	4.1
8’-0”	3’-11”	5’-5”	0.740R	0.201R	10’-0”	3’-9”	1’-1 $^{1}/_{4}$”	16.2	4.9
9’-0”	4’-4”	5’-10”	0.901R	0.216R	11’-0”	4’-3”	1’-3 $^{1}/_{2}$”	20.7	5.5
10’-0”	4’-9”	6’-3”	1.076R	0.232R	13’-0”	4’-6”	1’-4 $^{7}/_{8}$”	26.7	6.5
11’-0”	5’-2”	6’-8”	1.267R	0.247R	14’-0”	5’-0”	1’-7 $^{1}/_{8}$”	32.8	7.2
12’-0”	5’-7”	7’-1”	1.474R	0.262R	16’-0”	5’-0”	1’-7 $^{1}/_{2}$”	40.3	8.3
13’-0”	5’-11”	7’-5”	1.676R	0.275R	17’-0”	5’-6”	1’-9 $^{3}/_{8}$”	47.7	9.1
14’-0”	6’-4”	7’-10”	1.912R	0.290R	19’-0”	5’-9”	1’-10 $^{5}/_{8}$”	57.7	10.3

* To compute concrete quantity of the abutment, multiply volume as tabulated by R.

ADD THE FOLLOWING NOTES, DIMENSIONS, DETAILS, ETC. TO STANDARD:

PROJECT/TITLE BLOCKS:

Project block and title block shall be completed in accordance with Manual of the Structure and Bridge Division, Volume V – Part 2, Chapter 4.

DIMENSION DATA:

Enter H, L, R, W, h, f, and w dimensions in the DIMENSION DATA table.

TYPICAL BRIDGE SEATS:

If approach slab is required, replace details with cell BSA.

CAST-IN-PLACE CONCRETE SLAB SPANS

ABUTMENTS
0° SKEW – FILL SLOPE 2 : 1

NOTES TO DESIGNER(cont'd):

SECTION ON CENTERLINE:

If approach slab is required, replace details with cell PT4A.

STATE	FEDERAL AID ROUTE	FEDERAL AID PROJECT	STATE ROUTE	STATE PROJECT	SHEET NO.
VA.	—				

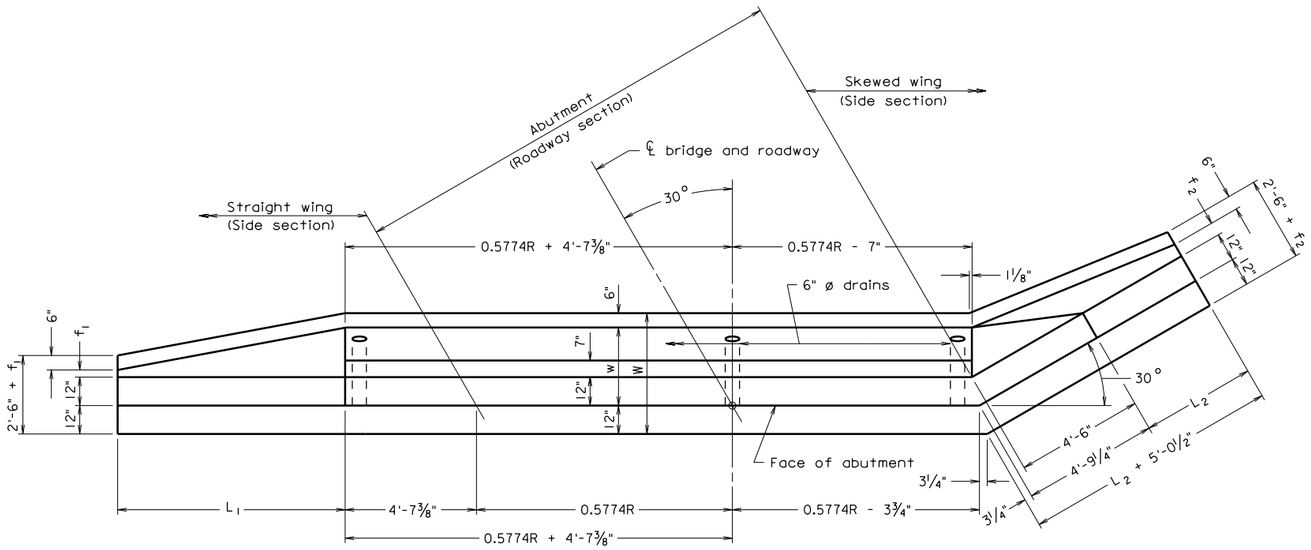

PLAN

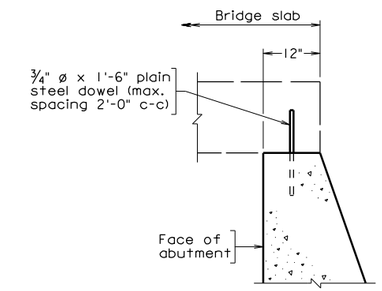

TYPICAL BRIDGE SEATS

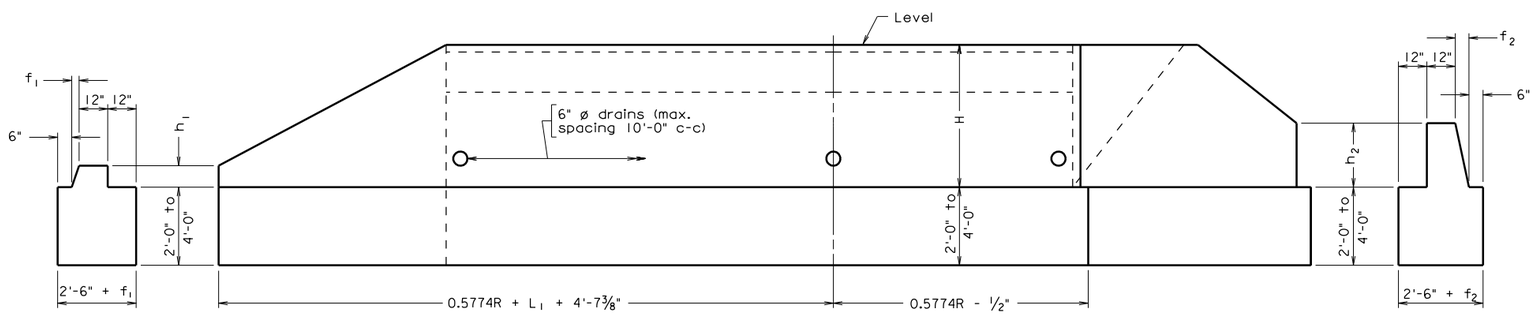

FRONT ELEVATION

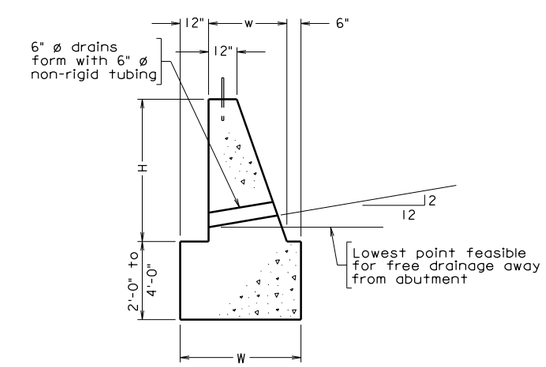

SECTION ON ℄

DIMENSION DATA
H =
L_1 =
L_2 =
R =
W =
f_1 =
f_2 =
h_1 =
h_2 =
w =

csd230.dgn

06-14-2010

CS-A2-30

Sealed and Signed by:
Julius F.J. Volgyi Jr.
Lic. No. 010487
On the date of
June 14, 2010

A copy of the original sealed and signed standard drawing is on file in the Central Office.

VDOT S&B DIVISION
RICHMOND, VA
STRUCTURAL ENGINEER

Not to scale

©2010, Commonwealth of Virginia

No.	Description	Date
	Revisions	

COMMONWEALTH OF VIRGINIA
DEPARTMENT OF TRANSPORTATION

STRUCTURE AND BRIDGE DIVISION

ABUTMENTS

Designed: .....
Drawn: .....
Checked: .....

Date	Plan No.	Sheet No.
	CS-A2-30	

CAST-IN-PLACE CONCRETE SLAB SPANS

ABUTMENTS
30° SKEW – FILL SLOPE 2 : 1

NOTES TO DESIGNER:

Standard to be used when abutments are on spread footings.

Standard is for: 30° skew
2 : 1 fill slope

TABLE OF DIMENSIONS AND QUANTITIES

ABUTMENT*					STRAIGHT WING				
H	w	W	Neat – CY per ft. of R	12” Ftg – CY per ft. of R	L_1	h_1	f_1	Neat CY	12” Footing CY
4’-0”	2’-4”	3’-10”	0.301R	0.164R	6’-0”	9”	3”	2.1	1.3
5’-0”	2’-9”	4’-3”	0.416R	0.182R	8’-0”	9”	3 1/8"	3.3	1.7
6’-0”	3’-2”	4’-8”	0.540R	0.200R	9’-0”	9”	3 1/4”	4.6	1.9
7’-0”	3’-7”	5’-1”	0.700R	0.217R	11’-0”	9”	3 1/4”	6.3	2.3
8’-0”	3’-11”	5’-5”	0.855R	0.232R	13’-0”	9”	3 1/4”	8.2	2.7
9’-0”	4’-4”	5’-10”	1.040R	0.249R	14’-0”	9”	3 3/8”	10.2	3.0
10’-0”	4’-9”	6’-3”	1.243R	0.267R	16’-0”	9”	3 3/8”	12.9	3.4
11’-0”	5’-2”	6’-8”	1.464R	0.285R	18’-0”	9”	3 3/8”	16.0	3.9
12’-0”	5’-7”	7’-1”	1.702R	0.303R	20’-0”	9”	3 3/8”	19.4	4.5
13’-0”	5’-11”	7’-5”	1.936R	0.317R	21’-0”	9”	3 3/8”	22.4	4.8
14’-0”	6’-4”	7’-10”	2.208R	0.335R	23’-0”	9”	3 3/8”	26.6	5.4

SKEWED WING					
H	L_2	h_2	f_2	Neat CY	12” Footing CY
4’-0”	3’-0”	2’-0”	4 1/4”	1.4	1.0
5’-0”	4’-0”	2’-3”	5 1/2"	2.1	1.2
6’-0”	5’-0”	2’-9”	7 1/2"	2.9	1.5
7’-0”	6’-0”	3’-0”	8 3/4”	4.0	1.8
8’-0”	7’-0”	3’-3”	9 3/4”	5.1	2.0
9’-0”	8’-0”	3’-9”	12”	6.6	2.3
10’-0”	9’-0”	4’-0”	1’-1 1/4”	8.3	2.7
11’-0”	10’-0”	4’-3”	1’-2 5/8”	10.2	3.0
12’-0”	11’-0”	4’-9”	1’-4 3/4”	12.6	3.4
13’-0”	12’-0”	5’-0”	1’-5 3/4”	14.9	3.8
14’-0”	13’-0”	5’-3”	1’-7 1/8”	17.7	4.2

* To compute concrete quantity of the abutment, multiply volume as tabulated by R.

CAST-IN-PLACE CONCRETE SLAB SPANS

ABUTMENTS
30° SKEW – FILL SLOPE 2 : 1

NOTES TO DESIGNER(cont'd):

ADD THE FOLLOWING NOTES, DIMENSIONS, DETAILS, ETC. TO STANDARD:

PROJECT/TITLE BLOCKS:

Project block and title block shall be completed in accordance with Manual of the Structure and Bridge Division, Volume V – Part 2, Chapter 4.

DIMENSION DATA:

Enter H, L_1, L_2, R, W, h_1, h_2, f_1, f_2, and w dimensions in the DIMENSION DATA table.

TYPICAL BRIDGE SEATS:

If approach slab is required, replace details with cell BSA.

ECTION ON CENTERLINE:

If approach slab is required, replace details with cell PT4A.

STATE	FEDERAL AID ROUTE	FEDERAL AID PROJECT	STATE ROUTE	STATE PROJECT	SHEET NO.
VA.	—				

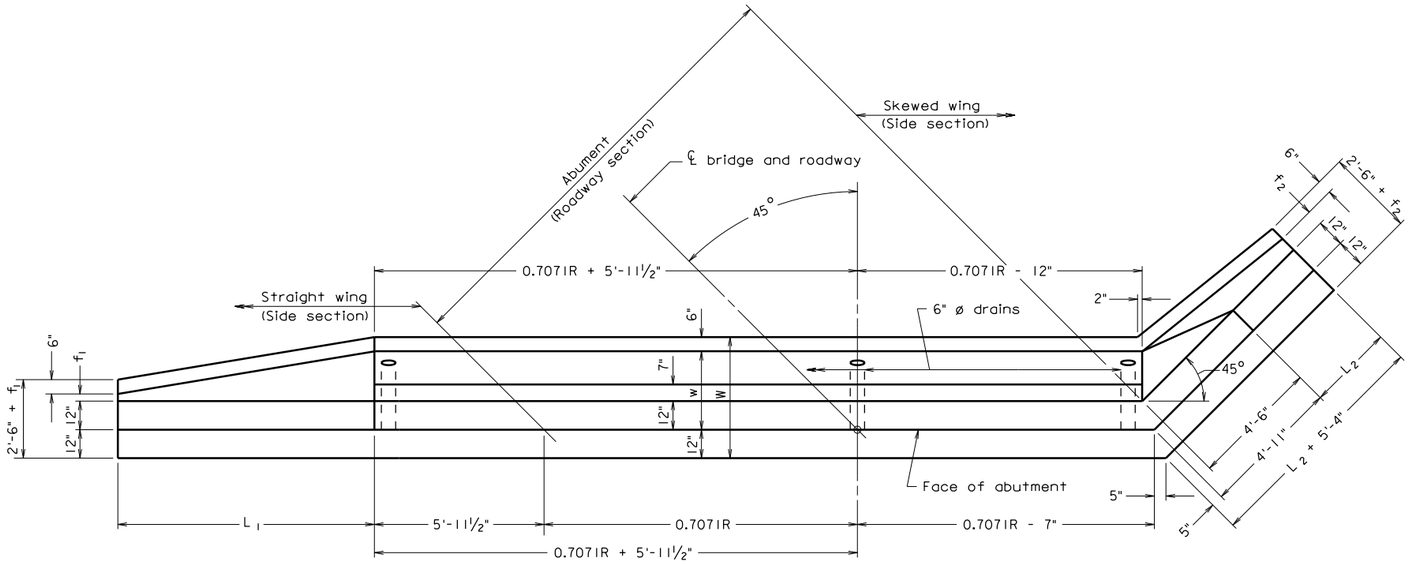

PLAN

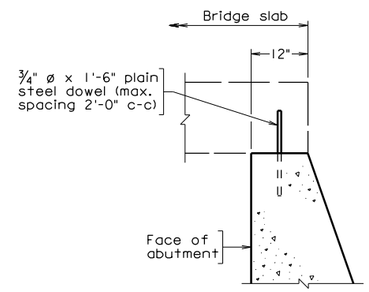

TYPICAL BRIDGE SEATS

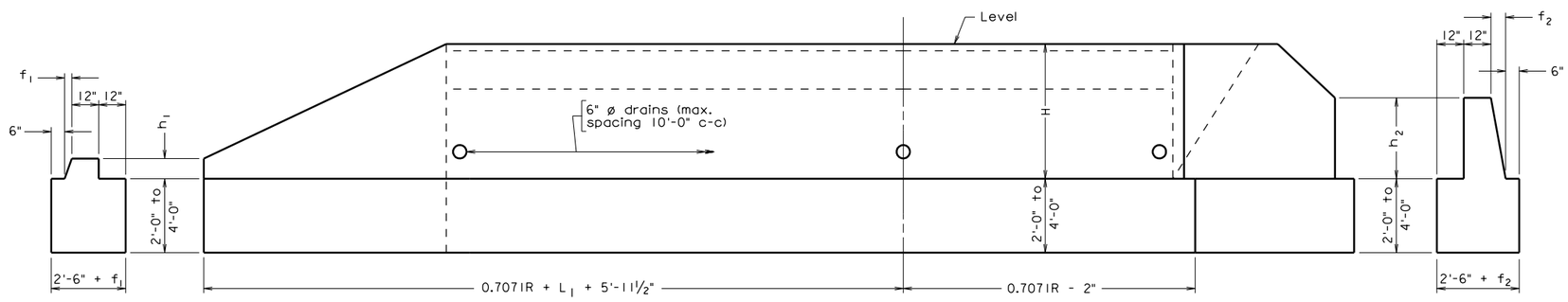

FRONT ELEVATION

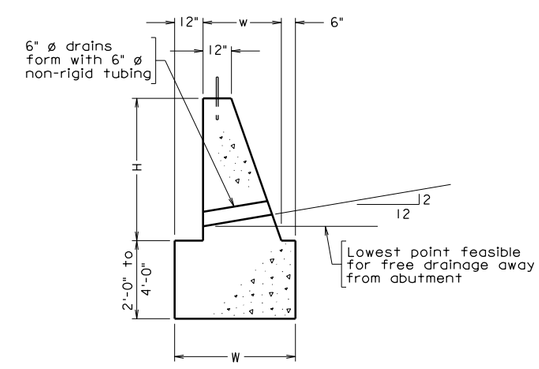

SECTION ON ℄

DIMENSION DATA
H =
L_1 =
L_2 =
R =
W =
f_1 =
f_2 =
h_1 =
h_2 =
w =

Not to scale

©2010, Commonwealth of Virginia

csa245.dgn

06-14-2010

CS-A2-45

Sealed and Signed by:
Julius F.J. Volgyi Jr.
Lic. No. 010487
On the date of
June 14, 2010

A copy of the original sealed and signed standard drawing is on file in the Central Office.

VDOT S&B DIVISION
RICHMOND, VA
STRUCTURAL ENGINEER

No.	Description	Date
	Revisions	

COMMONWEALTH OF VIRGINIA
DEPARTMENT OF TRANSPORTATION

STRUCTURE AND BRIDGE DIVISION

ABUTMENTS

Designed: .....
Drawn: .....
Checked: .....

Date	Plan No.	Sheet No.
	CS-A2-45	

CAST-IN-PLACE CONCRETE SLAB SPANS

ABUTMENTS
45° SKEW – FILL SLOPE 2 : 1

NOTES TO DESIGNER:

Standard to be used when abutments are on spread footings.

Standard is for: 45° skew
2 : 1 fill slope

TABLE OF DIMENSIONS AND QUANTITIES

ABUTMENT*					STRAIGHT WING				
H	w	W	Neat – CY per ft. of R	12" Ftg – CY per ft. of R	L_1	h_1	f_1	Neat CY	12" Footing CY
4'-0"	2'-4"	3'-10"	0.368R	0.201R	7'-0"	9"	3"	2.6	1.6
5'-0"	2'-9"	4'-3"	0.509R	0.223R	9'-0"	9"	3 1/8"	3.9	1.9
6'-0"	3'-2"	4'-8"	0.672R	0.244R	11'-0"	9"	3 1/4"	5.5	2.3
7'-0"	3'-7"	5'-1"	0.857R	0.266R	13'-0"	9"	3 1/4"	7.4	2.7
8'-0"	3'-11"	5'-5"	1.047R	0.284R	16'-0"	9"	3 1/4"	9.8	3.3
9'-0"	4'-4"	5'-10"	1.274R	0.306R	18'-0"	9"	3 3/8"	12.4	3.7
10'-0"	4'-9"	6'-3"	1.522R	0.327R	20'-0"	9"	3 3/8"	15.3	4.2
11'-0"	5'-2"	6'-8"	1.792R	0.349R	22'-0"	9"	3 3/8"	18.6	4.7
12'-0"	5'-7"	7'-1"	2.085R	0.371R	24'-0"	9"	3 3/8"	22.2	5.3
13'-0"	5'-11"	7'-5"	2.371R	0.389R	26'-0"	9"	3 3/8"	26.1	5.8
14'-0"	6'-4"	7'-10"	2.705R	0.410R	28'-0"	9"	3 3/8"	30.4	6.4

SKEWED WING					
H	L_2	h_2	f_2	Neat CY	12" Footing CY
4'-0"	2'-0"	2'-9"	5"	1.3	1.0
5'-0"	3'-0"	3'-0"	6 1/4"	1.9	1.2
6'-0"	4'-0"	3'-3"	7 1/2"	2.6	1.4
7'-0"	5'-0"	3'-9"	9 3/8"	3.5	1.7
8'-0"	6'-0"	4'-0"	10 1/4"	4.6	2.0
9'-0"	7'-0"	4'-3"	11 1/2"	5.8	2.3
10'-0"	7'-0"	5'-3"	1'-2 7/8"	7.0	2.5
11'-0"	8'-0"	5'-9"	1'-4 7/8"	8.8	2.8
12'-0"	9'-0"	6'-0"	1'-6 1/8"	10.6	3.2
13'-0"	10'-0"	6'-3"	1'-7"	12.6	3.5
14'-0"	11'-0"	6'-9"	1'-9 1/8"	15.2	4.0

* To compute concrete quantity of the abutment, multiply volume as tabulated by R.

CAST-IN-PLACE CONCRETE SLAB SPANS

ABUTMENTS
45° SKEW – FILL SLOPE 2 : 1

NOTES TO DESIGNER(cont'd):

ADD THE FOLLOWING NOTES, DIMENSIONS, DETAILS, ETC. TO STANDARD:

PROJECT/TITLE BLOCKS:

Project block and title block shall be completed in accordance with Manual of the Structure and Bridge Division, Volume V – Part 2, Chapter 4.

DIMENSION DATA:

Enter H, L_1, L_2, R, W, h_1, h_2, f_1, f_2, and w dimensions in the DIMENSION DATA table.

TYPICAL BRIDGE SEATS:

If approach slab is required, replace details with cell BSA.

ECTION ON CENTERLINE:

If approach slab is required, replace details with cell PT4A.

STATE	FEDERAL AID ROUTE	FEDERAL AID PROJECT	STATE ROUTE	STATE PROJECT	SHEET NO.
VA.	—				

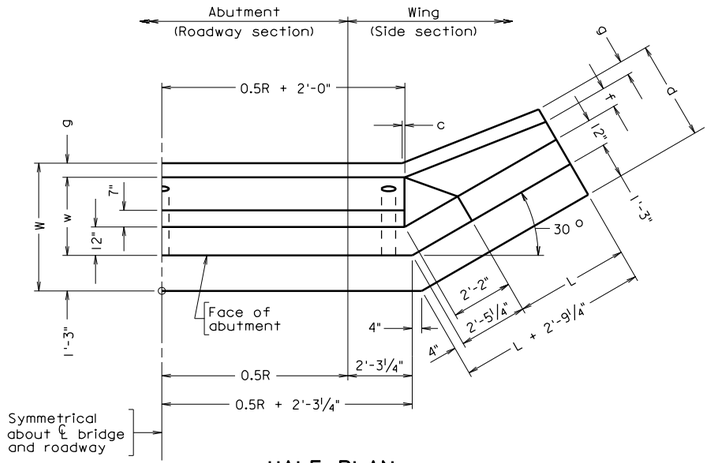

HALF PLAN

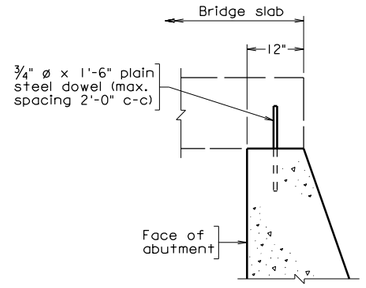

TYPICAL BRIDGE SEATS

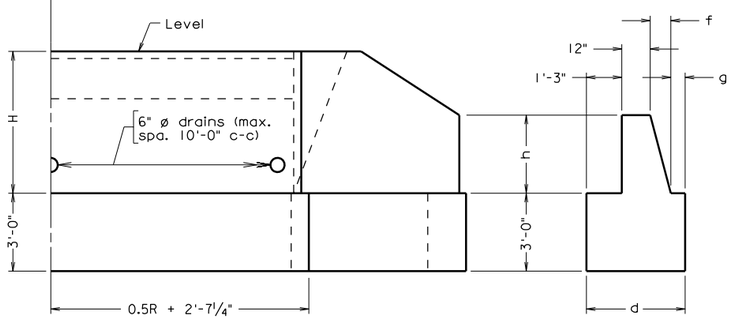

HALF ELEVATION
Piles omitted for clarity

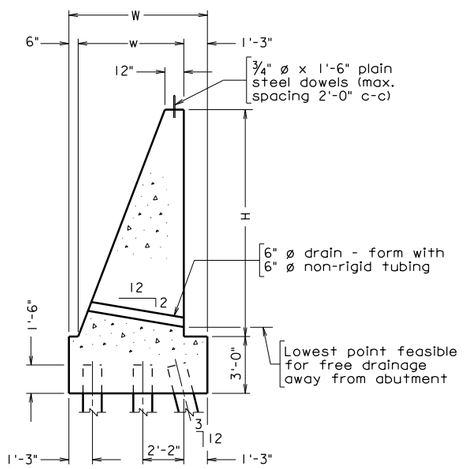

TYPICAL SECTION ON ℄

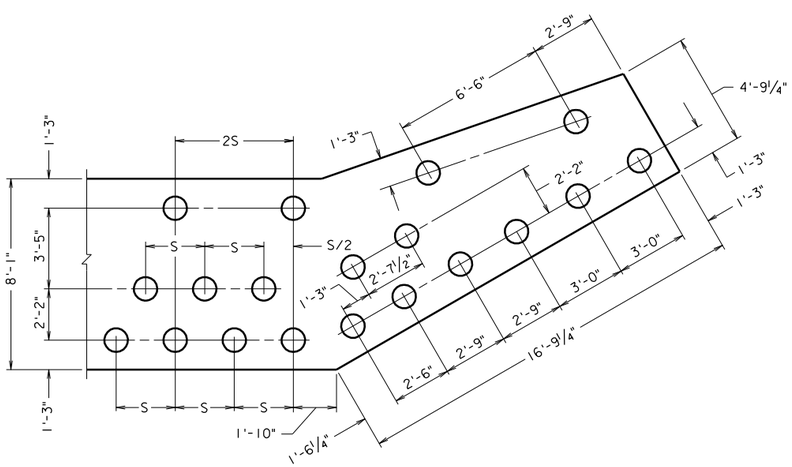

PILE PLAN

DIMENSION DATA
H =
L =
R =
W =
c =
d =
f =
g =
h =
w =

Not to scale

©2010, Commonwealth of Virginia

csapl150.dgn

CS-APL15-0 06-14-2010

Sealed and Signed by:
Julius F.J. Volgyi Jr.
Lic. No. 010487
On the date of
June 14, 2010

A copy of the original sealed and signed standard drawing is on file in the Central Office.

VDOT S&B DIVISION
RICHMOND, VA
STRUCTURAL ENGINEER

No.	Description	Date
	Revisions	

COMMONWEALTH OF VIRGINIA
DEPARTMENT OF TRANSPORTATION

STRUCTURE AND BRIDGE DIVISION

ABUTMENT

Designed: .....
Drawn: .....
Checked: .....

Date	Plan No.	Sheet No.
	CS-APL15-0	

CAST-IN-PLACE CONCRETE SLAB SPANS

ABUTMENTS ON PILES
0 ° SKEW - FILL SLOPE 1½ : 1

NOTES TO DESIGNER:

Standard to be used when abutments are on piles.

Standard is for: 0° skew
1½ : 1 fill slope

TABLE OF DIMENSIONS AND QUANTITIES									
ABUTMENT*					2-WINGS				
H	w	W	Neat – CY per ft. of R	Ftg – CY per ft. of R	L	h	f	Neat CY	Footing CY
4’-0”	2’-4”	4’-6”	0.260R	0.500R	3’-0”	2’-3”	6 $^{3}/_{8}$”	3.3	6.2
5’-0”	2’-9”	4’-6”	0.360R	0.500R	4’-0”	2’-9”	8 $^{3}/_{4}$"	5.1	7.3
6’-0”	3’-2”	4’-11”	0.475R	0.546R	5’-0”	3’-0”	10 $^{1}/_{8}$"	7.3	8.7
7’-0”	3’-7”	5’-4”	0.606R	0.593R	6’-0”	3’-6”	1’-0 $^{1}/_{2}$”	10.0	10.2
8’-0”	3’-11”	5’-8”	0.740R	0.630R	7’-0”	4’-0”	1’-2 $^{3}/_{8}$”	13.1	11.7
9’-0”	4’-4”	6’-1”	0.901R	0.676R	8’-0”	4’-6”	1’-4 $^{3}/_{4}$”	17.0	13.4
10’-0”	4’-9”	6’-6”	1.076R	0.722R	9’-0”	4’-9”	1’-6 $^{1}/_{4}$”	21.2	15.2
11’-0”	5’-2”	6’-11”	1.267R	0.769R	11’-0”	4’-9”	1’-6 $^{5}/_{8}$”	27.1	18.1
12’-0”	5’-7”	7’-4”	1.474R	0.815R	12’-0”	5’-0”	1’-8”	32.8	20.1
13’-0”	5’-11”	7’-8”	1.676R	0.852R	13’-0”	5’-6”	1’-9 $^{7}/_{8}$”	39.1	22.1
14’-0”	6’-4”	8’-1”	1.912R	0.898R	14’-0”	6’-0”	2’-0 $^{1}/_{4}$”	46.6	24.4

* To compute concrete quantity of the abutment, multiply volume as tabulated by R. Footing quantities do not include deductions for piles.

c = 2 $^{1}/_{8}$" (H = 4’-0”)
c = 1 $^{1}/_{8}$” (H = 5’-0” to 14’-0”)

d = 3’-2” + f (H = 4’-0”)
d = 2’-9” + f (H = 5’-0” to 14’-0”)

g = 11” (H = 4’-0”)
g = 6” (H = 5’-0” to 14’-0”)

CAST-IN-PLACE CONCRETE SLAB SPANS

ABUTMENTS ON PILES
0 ° SKEW - FILL SLOPE 1½ : 1

NOTES TO DESIGNER(cont'd):

ADD THE FOLLOWING NOTES, DIMENSIONS, DETAILS, ETC. TO STANDARD:

PROJECT/TITLE BLOCKS:

Project block and title block shall be completed in accordance with Manual of the Structure and Bridge Division, Volume V – Part 2, Chapter 4.

DIMENSION DATA:

Enter H, L, R, W, c, d, f, g, h, and w dimensions in the DIMENSION DATA table.

TYPICAL BRIDGE SEATS:

If approach slab is required, replace details with cell BSA.

SECTION ON CENTERLINE:

Typical Section based on H = 11'-0" to 14'-0" with no approach slab. Replace with appropriate cell if needed.

PILE PLAN:

Based on skew angle = 0 and H = 14'-0", replace the pile plan cell with the appropriate pile plan cell if needed.

STATE	FEDERAL AID ROUTE	FEDERAL AID PROJECT	STATE ROUTE	STATE PROJECT	SHEET NO.
VA.	—				

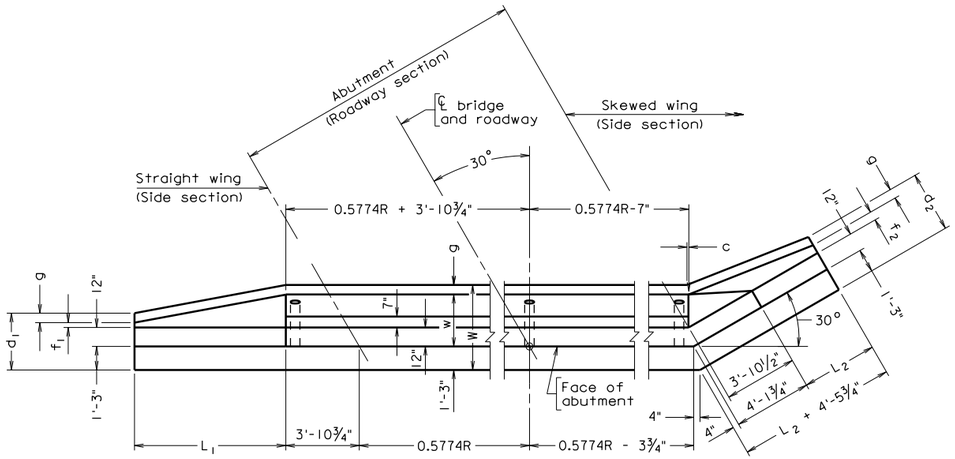

PLAN

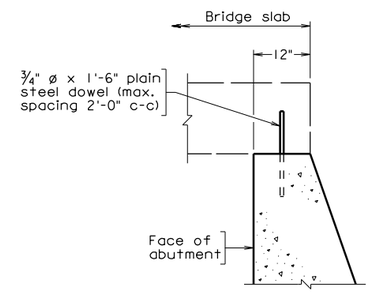

TYPICAL BRIDGE SEATS

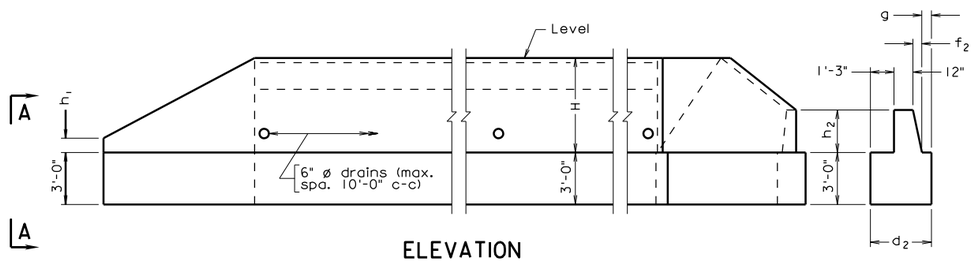

ELEVATION
Piles omitted for clarity

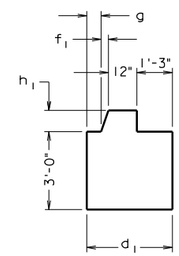

VIEW A-A

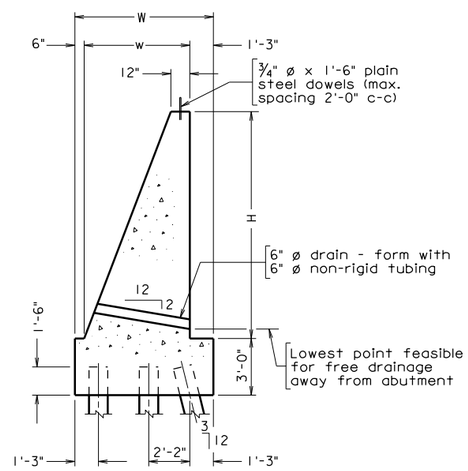

TYPICAL SECTION ON ℄

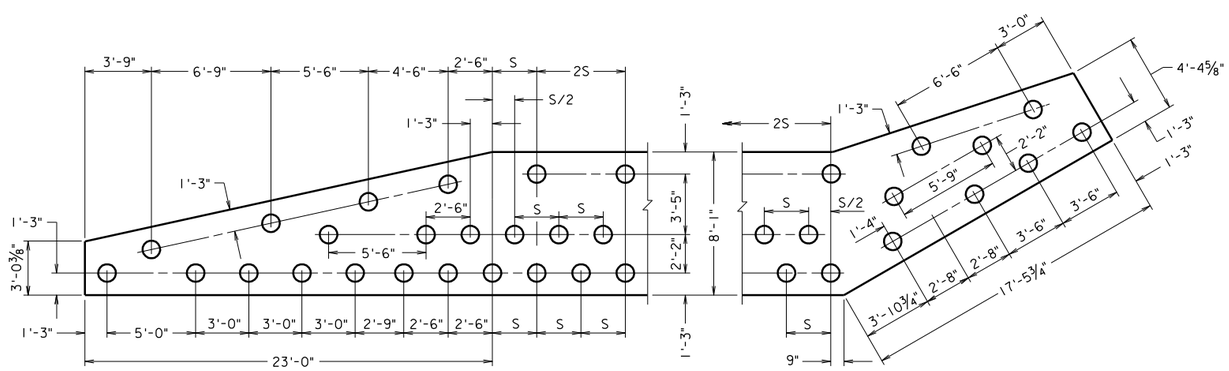

PILE PLAN

DIMENSION DATA
H =
L_1 =
L_2 =
R =
W =
f_1 =
f_2 =
h_1 =
h_2 =
w =
c =
d_1 =
d_2 =
g =

csapl1530.dgn

CS-APL15-30 06-14-2010

Sealed and Signed by:
Julius F.J. Volgyi Jr.
Lic. No. 010487
On the date of
June 14, 2010

A copy of the original sealed and signed standard drawing is on file in the Central Office.

VDOT S&B DIVISION
RICHMOND, VA
STRUCTURAL ENGINEER

Not to scale

©2010, Commonwealth of Virginia

No.	Description	Date
	Revisions	

COMMONWEALTH OF VIRGINIA
DEPARTMENT OF TRANSPORTATION

STRUCTURE AND BRIDGE DIVISION

ABUTMENT

Designed: .....
Drawn: .....
Checked: .....

Date	Plan No.	Sheet No.
	CS-APL15-30	

CAST-IN-PLACE CONCRETE SLAB SPANS

ABUTMENTS ON PILES
30 ° SKEW - FILL SLOPE 1½ : 1

NOTES TO DESIGNER:

Standard to be used when abutments are on piles.

Standard is for: 30° skew
1½ : 1 fill slope

TABLE OF DIMENSIONS AND QUANTITIES

ABUTMENT*					STRAIGHT WING				
H	w	W	Neat – CY per ft. of R	Ftg – CY per ft. of R	L_1	h_1	f_1	Neat CY	Footing CY
4'-0"	2'-4"	4'-6"	0.301R	0.577R	6'-0"	9"	3"	1.9	4.0
5'-0"	2'-9"	4'-6"	0.416R	0.577R	8'-0"	9"	3 1/8"	2.9	4.8
6'-0"	3'-2"	4'-11"	0.540R	0.631R	9'-0"	9"	3 1/4"	4.0	5.5
7'-0"	3'-7"	5'-4"	0.700R	0.684R	11'-0"	9"	3 3/8"	5.6	6.7
8'-0"	3'-11"	5'-8"	0.855R	0.727R	13'-0"	9"	3 3/8"	7.4	7.9
9'-0"	4'-4"	6'-1"	1.040R	0.780R	14'-0"	9"	3 3/8"	9.2	8.8
10'-0"	4'-9"	6'-6"	1.243R	0.834R	16'-0"	9"	3 3/8"	11.6	10.3
11'-0"	5'-2"	6'-11"	1.464R	0.888R	18'-0"	9"	3 3/8"	14.4	11.7
12'-0"	5'-7"	7'-4"	1.702R	0.941R	20'-0"	9"	3 3/8"	17.6	13.2
13'-0"	5'-11"	7'-8"	1.936R	0.983R	21'-0"	9"	3 3/8"	20.4	14.2
14'-0"	6'-4"	8'-1"	2.208R	1.037R	23'-0"	9"	3 3/8"	24.3	15.9

SKEWED WING					
H	L_2	h_2	f_2	Neat CY	Footing CY
4'-0"	3'-0"	2'-0"	4 1/2"	1.3	3.0
5'-0"	4'-0"	2'-3"	5 3/4"	1.9	3.6
6'-0"	5'-0"	2'-9"	7 7/8"	2.7	4.4
7'-0"	6'-0"	3'-0"	9 1/4"	3.7	5.2
8'-0"	7'-0"	3'-3"	10 1/4"	4.8	6.0
9'-0"	8'-0"	3'-9"	1'-0 1/2"	6.3	7.0
10'-0"	9'-0"	4'-0"	1'-1 3/4"	7.9	8.4
11'-0"	10'-0"	4'-3"	1'-3 1/8"	9.7	9.0
12'-0"	11'-0"	4'-9"	1'-5 3/8"	12.0	10.2
13'-0"	12'-0"	5'-0"	1'-6 3/8"	14.3	11.3
14'-0"	13'-0"	5'-3"	1'-7 5/8"	17.0	12.5

* To compute concrete quantity of the abutment, multiply volume as tabulated by R. Footing quantities do not include deductions for piles

CAST-IN-PLACE CONCRETE SLAB SPANS

ABUTMENTS ON PILES
30 ° SKEW - FILL SLOPE 1½ : 1

NOTES TO DESIGNER(cont'd):

c = 2 $^1/_4$" (H = 4'-0")
c = 1" (H = 5'-0" to 14'-0")

d_1 = 3'-2" + f_1 (H = 4'-0")
d_1 = 2'-9" + f_1 (H = 5'-0" to 14'-0")

d_2 = 3'-2" + f_2 (H = 4'-0")
d_2 = 2'-9" + f_2 (H = 5'-0" to 14'-0")

g = 11" (H = 4'-0")
g = 6" (H = 5'-0" to 14'-0")

ADD THE FOLLOWING NOTES, DIMENSIONS, DETAILS, ETC. TO STANDARD:

PROJECT/TITLE BLOCKS:

Project block and title block shall be completed in accordance with Manual of the Structure and Bridge Division, Volume V – Part 2, Chapter 4.

DIMENSION DATA:

Enter H, L_1, L_2, R, W, c, d_1, d_2, g, h_1, h_2, f_1, f_2, and w dimensions in the DIMENSION DATA table.

TYPICAL BRIDGE SEATS:

If approach slab is required, replace details with cell BSA.

SECTION ON CENTERLINE:

Typical Section based on H = 11'-0" to 14'-0" with no approach slab, replace with appropriate cell if needed.

PILE PLAN:

Based on skew angle = 30° and H = 14'-0", replace the pile plan cell with the appropriate pile plan cell if needed.

STATE	FEDERAL AID ROUTE	FEDERAL AID PROJECT	STATE ROUTE	STATE PROJECT	SHEET NO.
VA.	—				

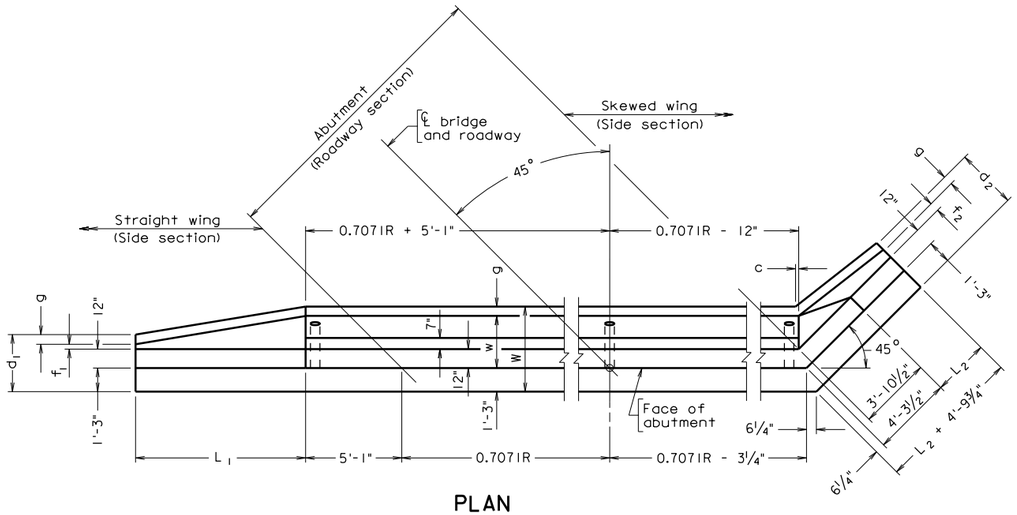

PLAN

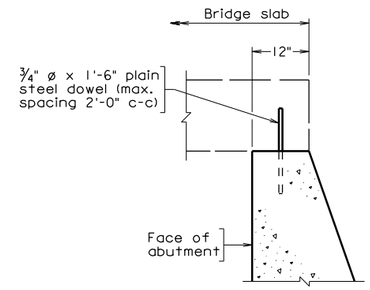

TYPICAL BRIDGE SEATS

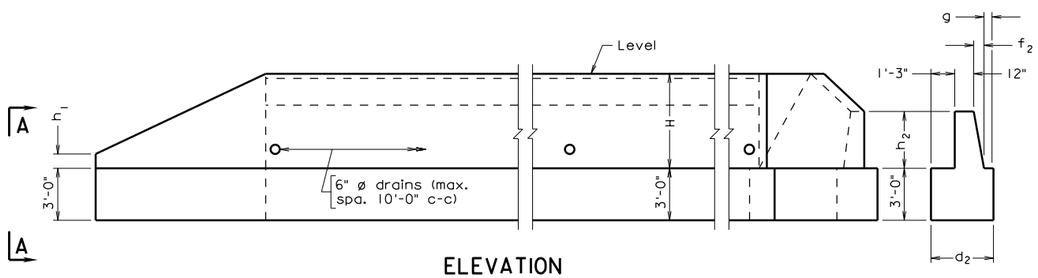

ELEVATION
Piles omitted for clarity

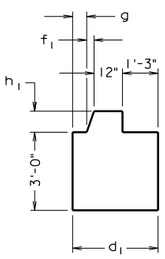

VIEW A-A

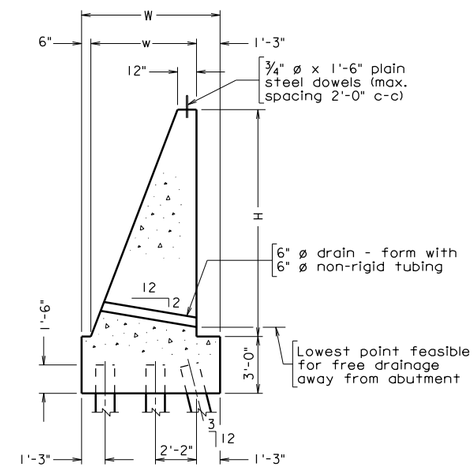

TYPICAL SECTION ON ℄

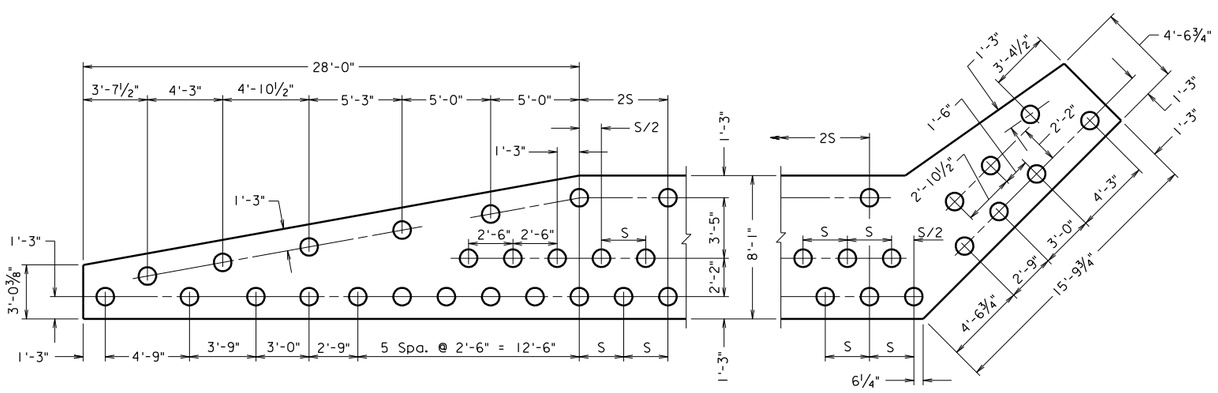

PILE PLAN

DIMENSION DATA
H =
L_1 =
L_2 =
R =
W =
f_1 =
f_2 =
h_1 =
h_2 =
w =
c =
d_1 =
d_2 =
g =

csapl1545.dgn

CS-APL15-45 06-14-2010

Sealed and Signed by:
Julius F.J. Volgyl Jr.
Lic. No. 010487
On the date of
June 14, 2010

A copy of the original sealed and signed standard drawing is on file in the Central Office.

VDOT S&B DIVISION
RICHMOND, VA
STRUCTURAL ENGINEER

Not to scale

©2010, Commonwealth of Virginia

No.	Description	Date
	Revisions	

COMMONWEALTH OF VIRGINIA
DEPARTMENT OF TRANSPORTATION

STRUCTURE AND BRIDGE DIVISION

ABUTMENT

Designed: .....
Drawn: .....
Checked: .....

Date	Plan No.	Sheet No.
	CS-APL15-45	

CAST-IN-PLACE CONCRETE SLAB SPANS

ABUTMENTS ON PILES
45 ° SKEW - FILL SLOPE 1½ : 1

NOTES TO DESIGNER:

Standard to be used when abutments are on piles.

Standard is for: 45° skew
1½ : 1 fill slope

TABLE OF DIMENSIONS AND QUANTITIES

ABUTMENT*					STRAIGHT WING				
H	w	W	Neat – CY per ft. of R	Ftg – CY per ft. of R	L_1	h_1	f_1	Neat CY	Footing CY
4'-0"	2'-4"	4'-6"	0.368R	0.707R	7'-0"	9"	3"	2.3	4.8
5'-0"	2'-9"	4'-6"	0.509R	0.707R	9'-0"	9"	3 1/8"	3.4	5.6
6'-0"	3'-2"	4'-11"	0.672R	0.773R	11'-0"	9"	3 1/4"	4.8	6.7
7'-0"	3'-7"	5'-4"	0.857R	0.838R	13'-0"	9"	3 3/8"	6.5	7.9
8'-0"	3'-11"	5'-8"	1.047R	0.891R	16'-0"	9"	3 3/8"	8.8	9.6
9'-0"	4'-4"	6'-1"	1.273R	0.956R	18'-0"	9"	3 3/8"	11.1	11.0
10'-0"	4'-9"	6'-6"	1.522R	1.021R	20'-0"	9"	3 3/8"	13.7	12.5
11'-0"	5'-2"	6'-11"	1.792R	1.087R	22'-0"	9"	3 3/8"	16.7	14.0
12'-0"	5'-7"	7'-4"	2.085R	1.152R	24'-0"	9"	3 3/8"	20.0	15.6
13'-0"	5'-11"	7'-8"	2.371R	1.205R	26'-0"	9"	3 3/8"	23.6	17.1
14'-0"	6'-4"	8'-1"	2.705R	1.270R	28'-0"	9"	3 3/8"	27.6	18.9

SKEWED WING					
H	L_2	h_2	f_2	Neat CY	Footing CY
4'-0"	2'-0"	2'-9"	5 3/8"	1.1	2.9
5'-0"	3'-0"	3'-0"	6 5/8"	1.7	3.5
6'-0"	4'-0"	3'-3"	7 7/8"	2.4	4.2
7'-0"	5'-0"	3'-9"	9 7/8"	3.3	5.0
8'-0"	6'-0"	4'-0"	10 3/4"	4.3	5.8
9'-0"	7'-0"	4'-3"	12"	5.5	6.7
10'-0"	7'-0"	5'-3"	1'-3 3/8"	6.6	7.3
11'-0"	8'-0"	5'-9"	1'-5 1/2"	8.3	8.4
12'-0"	9'-0"	6'-0"	1'-6 3/4"	10.1	9.5
13'-0"	10'-0"	6'-3"	1'-7 5/8"	12.0	10.6
14'-0"	11'-0"	6'-9"	1'-9 3/4"	14.5	11.8

*To compute concrete quantity of the abutment, multiply volume as tabulated by R. Footing quantities do not include deductions for piles.

CAST-IN-PLACE CONCRETE SLAB SPANS

ABUTMENTS ON PILES
45 ° SKEW - FILL SLOPE 1½ : 1

NOTES TO DESIGNER (cont'd):

c = 3 $^{7}/_{8}$" (H = 4'-0")
c = 2" (H = 5'-0" to 14'-0")

d_1 = 3'-2" + f_1 (H = 4'-0")
d_1 = 2'-9" + f_1 (H = 5'-0" to 14'-0")

d_2 = 3'-2" + f_2 (H = 4'-0")
d_2 = 2'-9" + f_2 (H = 5'-0" to 14'-0")

g = 11" (H = 4'-0")
g = 6" (H = 5'-0" to 14'-0")

ADD THE FOLLOWING NOTES, DIMENSIONS, DETAILS, ETC. TO STANDARD:

PROJECT/TITLE BLOCKS:

Project block and title block shall be completed in accordance with Manual of the Structure and Bridge Division, Volume V – Part 2, Chapter 4.

DIMENSION DATA:

Enter H, L_1, L_2, R, W, c, d_1, d_2, g, h_1, h_2, f_1, f_2, and w dimensions in the DIMENSION DATA table.

TYPICAL BRIDGE SEATS:

If approach slab is required, replace details with cell BSA.

SECTION ON CENTERLINE:

Typical Section based on H = 11'-0" to 14'-0" with no approach slab, replace with appropriate cell if needed.

PILE PLAN:

Based on skew angle = 45° and H = 14'-0", replace the pile plan cell with the appropriate pile plan cell if needed.

STATE	FEDERAL AID ROUTE	FEDERAL AID PROJECT	STATE ROUTE	STATE PROJECT	SHEET NO.
VA.	—				

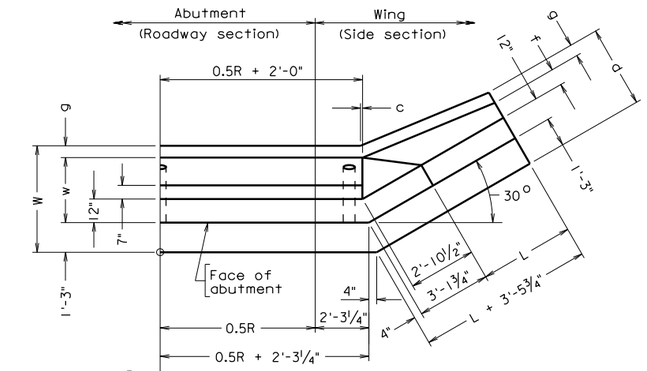

HALF PLAN

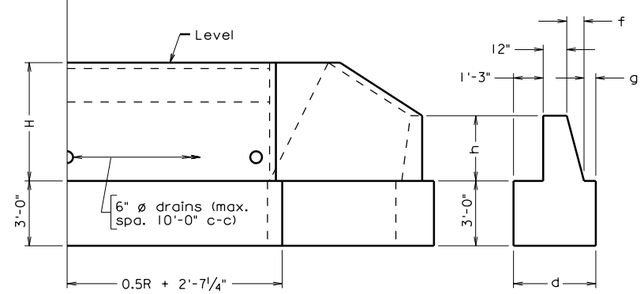

HALF ELEVATION
Piles omitted for clarity

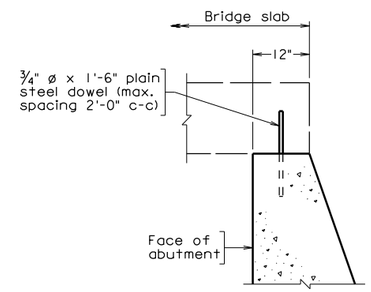

TYPICAL BRIDGE SEATS

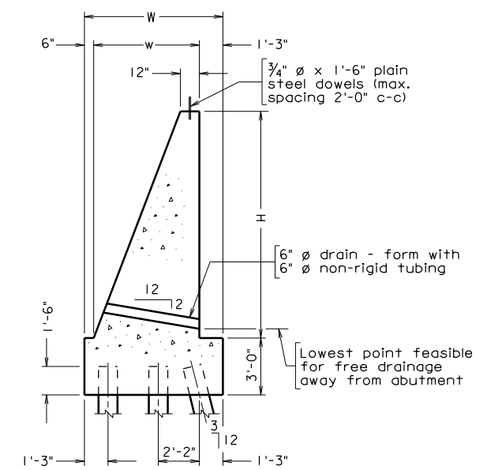

TYPICAL SECTION ON ℄

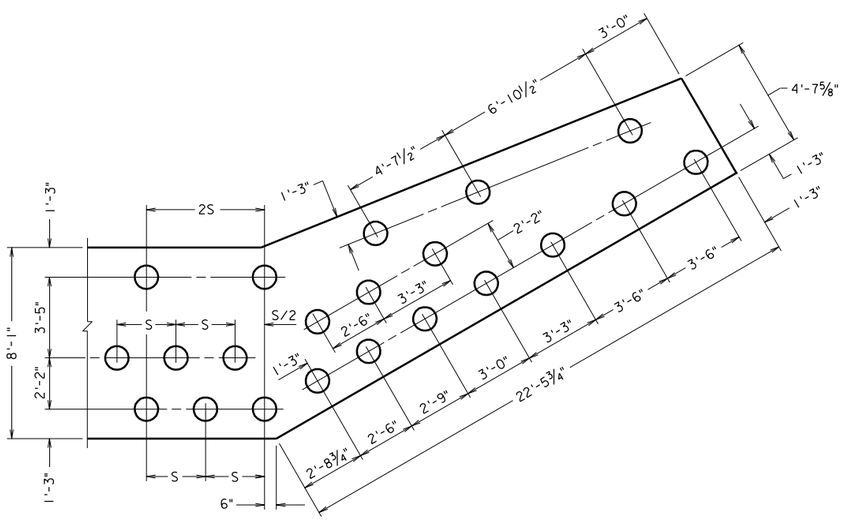

PILE PLAN

DIMENSION DATA
H =
L =
W =
R =
c =
d =
f =
g =
h =
w =

Sealed and Signed by:
Julius F.J. Volgyl Jr.
Lic. No. 010487
On the date of
June 14, 2010

A copy of the original sealed and signed standard drawing is on file in the Central Office.

VDOT S&B DIVISION
RICHMOND, VA
STRUCTURAL ENGINEER

csapl20.dgn

CS-APL2-0 06-14-2010

Not to scale

©2010, Commonwealth of Virginia

No.	Description	Date
	Revisions	

COMMONWEALTH OF VIRGINIA
DEPARTMENT OF TRANSPORTATION

STRUCTURE AND BRIDGE DIVISION

ABUTMENT

Designed: .....
Drawn: .....
Checked: .....

Date	Plan No.	Sheet No.
	CS-APL2-0	

CAST-IN-PLACE CONCRETE SLAB SPANS

ABUTMENTS ON PILES
0 ° SKEW - FILL SLOPE 2: 1

NOTES TO DESIGNER:

Standard to be used when abutments are on piles.

Standard is for: 0° skew
2: 1 fill slope

TABLE OF DIMENSIONS AND QUANTITIES									
ABUTMENT*					2-WINGS				
H	w	W	Neat – CY per ft. of R	Ftg – CY per ft. of R	L	H	f	Neat CY	Footing CY
4’-0”	2’-4”	4’-6”	0.260R	0.500R	4’-0”	2’-3”	6 $^{1}/_{4}$”	3.9	7.5
5’-0”	2’-9”	4’-6”	0.360R	0.500R	5’-0”	2’-9”	8 $^{1}/_{2}$"	5.9	8.7
6’-0”	3’-2”	4’-11”	0.475R	0.546R	7’-0”	3’-0”	10"	8.9	11.0
7’-0”	3’-7”	5’-4”	0.606R	0.593R	8’-0”	3’-6”	1’-0 $^{1}/_{4}$”	12.0	12.7
8’-0”	3’-11”	5’-8”	0.740R	0.630R	10’-0”	3’-9”	1’-1 $^{1}/_{4}$”	16.2	15.2
9’-0”	4’-4”	6’-1”	0.901R	0.676R	11’-0”	4’-3”	1’-3 $^{1}/_{2}$”	20.7	17.2
10’-0”	4’-9”	6’-6”	1.076R	0.722R	13’-0”	4’-6”	1’-4 $^{7}/_{8}$”	26.7	20.2
11’-0”	5’-2”	6’-11”	1.267R	0.769R	14’-0”	5’-0”	1’-7 $^{1}/_{8}$”	32.8	22.4
12’-0”	5’-7”	7’-4”	1.474R	0.815R	16’-0”	5’-0”	1’-7 $^{1}/_{2}$”	40.3	25.7
13’-0”	5’-11”	7’-8”	1.676R	0.852R	17’-0”	5’-6”	1’-9 $^{3}/_{8}$”	47.7	28.0
14’-0”	6’-4”	8’-1”	1.912R	0.898R	19’-0”	5’-9”	1’-10 $^{5}/_{8}$”	57.7	31.7

* To compute concrete quantity of the abutment, multiply volume as tabulated by R. Footing quantities do not include deductions for piles.

c = 2 $^{3}/_{8}$" (H = 4’-0”)
c = 1 $^{1}/_{4}$” (H = 5’-0” to 14’-0”)

d = 3’-2” + f (H = 4’-0”)
d = 2’-9” + f (H = 5’-0” to 14’-0”)

g = 11” (H = 4’-0”)
g = 6” (H = 5’-0” to 14’-0”)

CAST-IN-PLACE CONCRETE SLAB SPANS

ABUTMENTS ON PILES
0 ° SKEW - FILL SLOPE 2: 1

NOTES TO DESIGNER(cont'd):

ADD THE FOLLOWING NOTES, DIMENSIONS, DETAILS, ETC. TO STANDARD:

PROJECT/TITLE BLOCKS:

Project block and title block shall be completed in accordance with Manual of the Structure and Bridge Division, Volume V – Part 2, Chapter 4.

DIMENSION DATA:

Enter H, L, R, W, c, d, f, g, h, and w dimensions in the DIMENSION DATA table.

TYPICAL BRIDGE SEATS:

If approach slab is required, replace details with cell BSA.

SECTION ON CENTERLINE:

Typical Section based on H = 11'-0" to 14'-0" with no approach slab, replace with appropriate cell if needed.

PILE PLAN:

Based on skew angle = 0° and H = 14'-0", replace the pile plan cell with the appropriate pile plan cell if needed.

STATE	FEDERAL AID ROUTE	FEDERAL AID PROJECT	STATE ROUTE	STATE PROJECT	SHEET NO.
VA.	—				

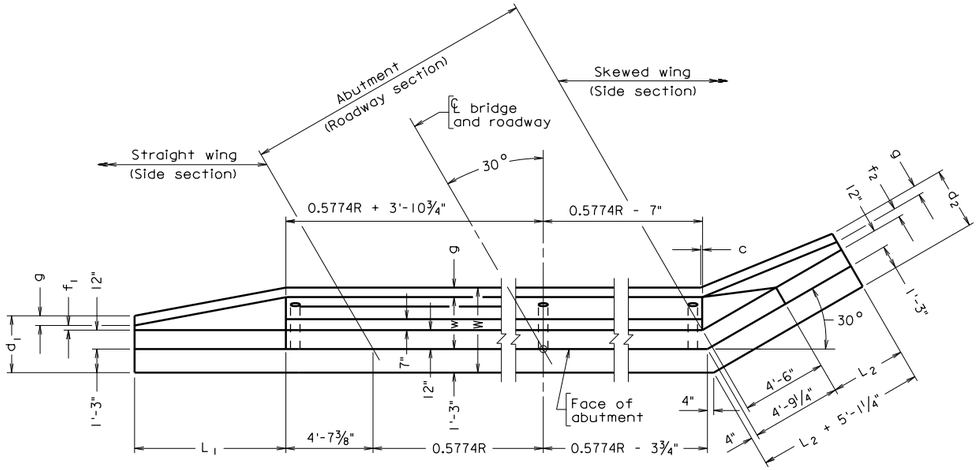

PLAN

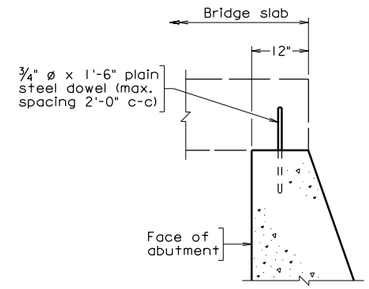

TYPICAL BRIDGE SEATS

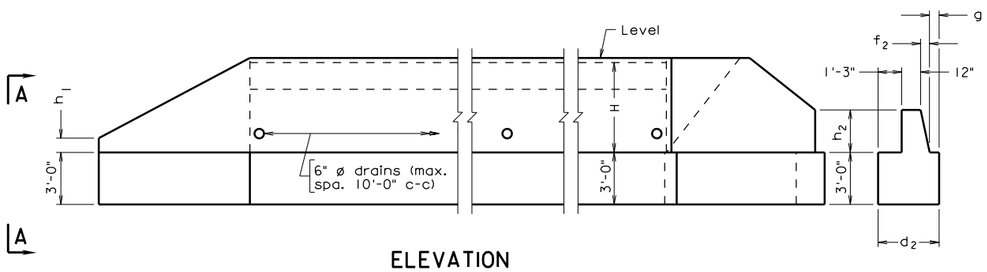

ELEVATION

Piles omitted for clarity

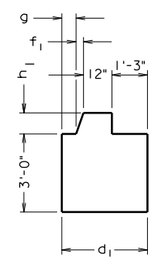

VIEW A-A

DIMENSION DATA
H =
L_1 =
L_2 =
R =
W =
f_1 =
f_2 =
h_1 =
h_2 =
w =
c =
d_1 =
d_2 =
g =

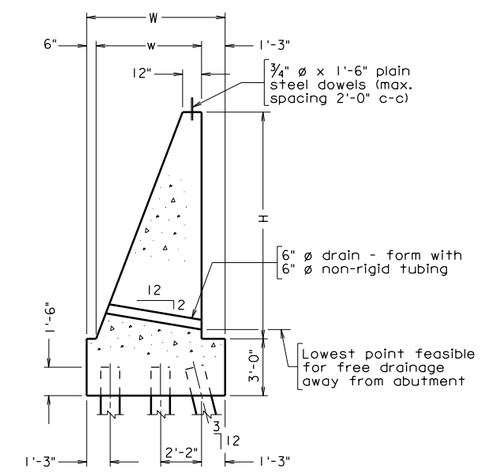

TYPICAL SECTION ON ℄

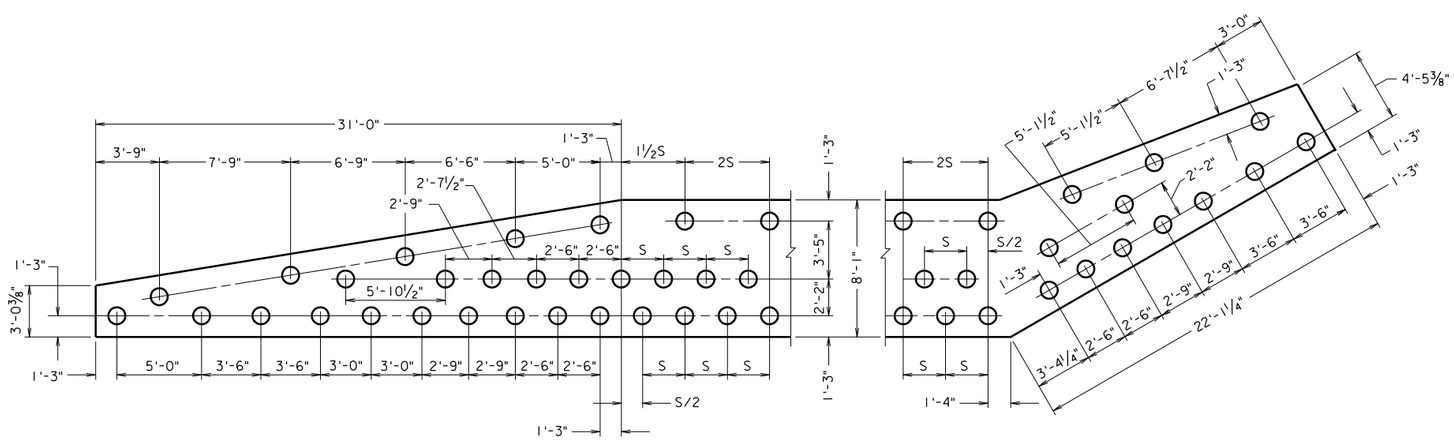

PILE PLAN

Not to scale

©2010, Commonwealth of Virginia

csapl230.dgn

CS-APL2-30 06-14-2010

Sealed and Signed by:
Julius F.J. Volgyi Jr.
Lic. No. 010487
On the date of
June 14, 2010

A copy of the original sealed and signed standard drawing is on file in the Central Office.

VDOT S&B DIVISION
RICHMOND, VA
STRUCTURAL ENGINEER

No.	Description	Date
	Revisions	

COMMONWEALTH OF VIRGINIA
DEPARTMENT OF TRANSPORTATION

STRUCTURE AND BRIDGE DIVISION

ABUTMENT

Designed: .....
Drawn: .....
Checked: .....

Date	Plan No.	Sheet No.
	CS-APL2-30	

CAST-IN-PLACE CONCRETE SLAB SPANS

ABUTMENTS ON PILES
30 ° SKEW - FILL SLOPE 2: 1

NOTES TO DESIGNER:

Standard to be used when abutments are on piles.

Standard is for: 30° skew
2: 1 fill slope

TABLE OF DIMENSIONS AND QUANTITIES

ABUTMENT*					STRAIGHT WING				
H	w	W	Neat – CY per ft. of R	Ftg – CY per ft. of R	L_1	h_1	f_1	Neat CY	Footing CY
4'-0"	2'-4"	4'-6"	0.301R	0.577R	8'-0"	9"	3"	2.4	5.2
5'-0"	2'-9"	4'-6"	0.416R	0.577R	10'-0"	9"	3 1/8"	3.6	6.0
6'-0"	3'-2"	4'-11"	0.540R	0.631R	13'-0"	9"	3 1/4"	5.4	7.6
7'-0"	3'-7"	5'-4"	0.700R	0.684R	15'-0"	9"	3 3/8"	7.4	9.0
8'-0"	3'-11"	5'-8"	0.855R	0.727R	17'-0"	9"	3 3/8"	9.5	10.3
9'-0"	4'-4"	6'-1"	1.040R	0.780R	20'-0"	9"	3 3/8"	12.5	12.2
10'-0"	4'-9"	6'-6"	1.243R	0.834R	22'-0"	9"	3 3/8"	15.6	13.8
11'-0"	5'-2"	6'-11"	1.464R	0.888R	24'-0"	9"	3 3/8"	19.1	15.5
12'-0"	5'-7"	7'-4"	1.702R	0.941R	27'-0"	9"	3 3/8"	23.6	17.8
13'-0"	5'-11"	7'-8"	1.936R	0.984R	29'-0"	9"	3 3/8"	27.8	19.4
14'-0"	6'-4"	8'-1"	2.208R	1.037R	31'-0"	9"	3 3/8"	32.7	21.4

SKEWED WING					
H	L_2	h_2	f_2	Neat CY	Footing CY
4'-0"	4'-0"	2'-0"	4 5/8"	1.6	3.6
5'-0"	5'-0"	2'-6"	5 3/4"	2.3	4.3
6'-0"	6'-0"	3'-0"	8 3/4"	3.3	5.2
7'-0"	8'-0"	3'-0"	9 3/8"	4.6	6.4
8'-0"	9'-0"	3'-6"	11 1/8"	6.0	7.3
9'-0"	10'-0"	4'-0"	1'-1 3/8"	7.7	8.4
10'-0"	12'-0"	4'-0"	1'-1 3/4"	10.0	9.9
11'-0"	13'-0"	4'-6"	1'-4"	12.4	11.1
12'-0"	14'-0"	5'-0"	1'-6 1/8"	15.1	12.4
13'-0"	16'-0"	5'-0"	1'-6 1/4"	18.4	14.1
14'-0"	17'-0"	5'-6"	1'-8 3/8"	21.8	15.5

* To compute concrete quantity of the abutment, multiply volume as tabulated by R. Footing quantities do not include deductions for piles.

CAST-IN-PLACE CONCRETE SLAB SPANS

ABUTMENTS ON PILES
30 ° SKEW - FILL SLOPE 2: 1

NOTES TO DESIGNER(cont'd):

c = 2 $^{3}/_{8}$" (H = 4'-0")
c = 1 $^{1}/_{4}$" (H = 5'-0" to 14'-0")

d_1 = 3'-2" + f_1 (H = 4'-0")
d_1 = 2'-9" + f_1 (H = 5'-0" to 14'-0")

d_2 = 3'-2" + f_2 (H = 4'-0")
d_2 = 2'-9" + f_2 (H = 5'-0" to 14'-0")

g = 11" (H = 4'-0")
g = 6" (H = 5'-0" to 14'-0")

ADD THE FOLLOWING NOTES, DIMENSIONS, DETAILS, ETC. TO STANDARD:

PROJECT/TITLE BLOCKS:

Project block and title block shall be completed in accordance with Manual of the Structure and Bridge Division, Volume V – Part 2, Chapter 4.

DIMENSION DATA:

Enter H, L_1, L_2, R, W, c, d_1, d_2, g, h_1, h_2, f_1, f_2, and w dimensions in the DIMENSION DATA table.

TYPICAL BRIDGE SEATS:

If approach slab is required, replace details with cell BSA.

SECTION ON CENTERLINE:

Typical Section based on H = 11'-0" to 14'-0" with no approach slab, replace with appropriate cell if needed.

PILE PLAN:

Based on skew angle = 30° and H = 14'-0", replace the pile plan cell with the appropriate pile plan cell if needed.

STATE	FEDERAL AID ROUTE	FEDERAL AID PROJECT	STATE ROUTE	STATE PROJECT	SHEET NO.
VA.	—				

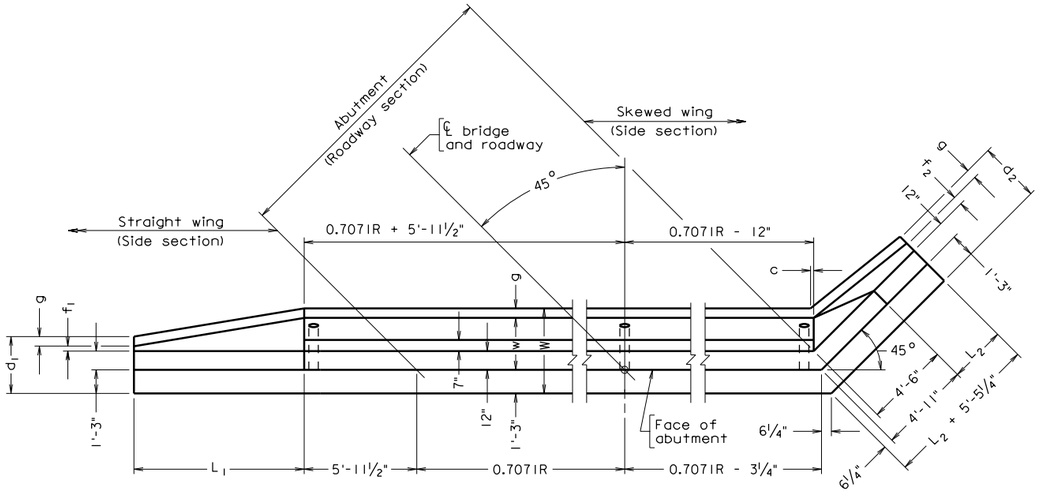

PLAN

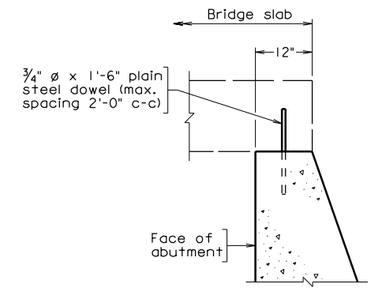

TYPICAL BRIDGE SEATS

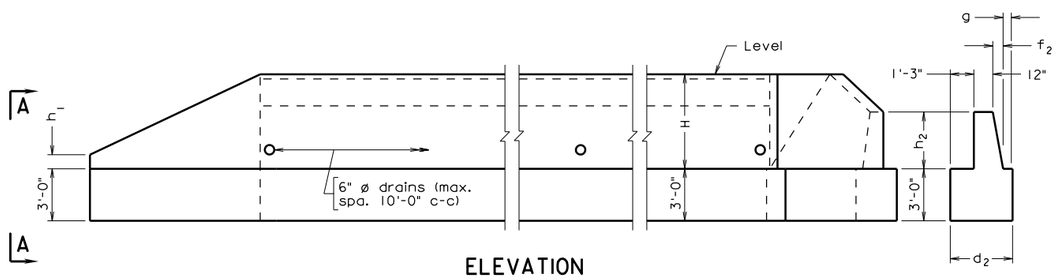

ELEVATION

Piles omitted for clarity

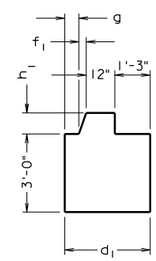

VIEW A-A

DIMENSION DATA
H =
L_1 =
L_2 =
R =
W =
f_1 =
f_2 =
h_1 =
h_2 =
w =
c =
d_1 =
d_2 =
g =

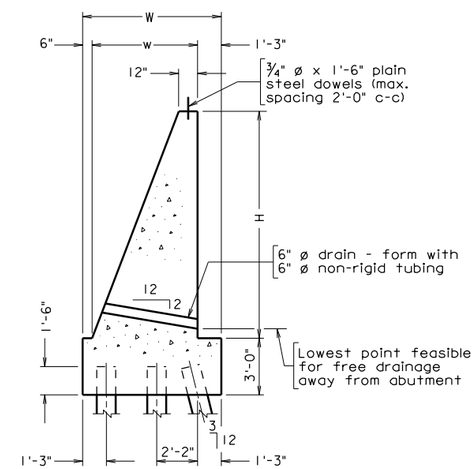

TYPICAL SECTION ON ℄

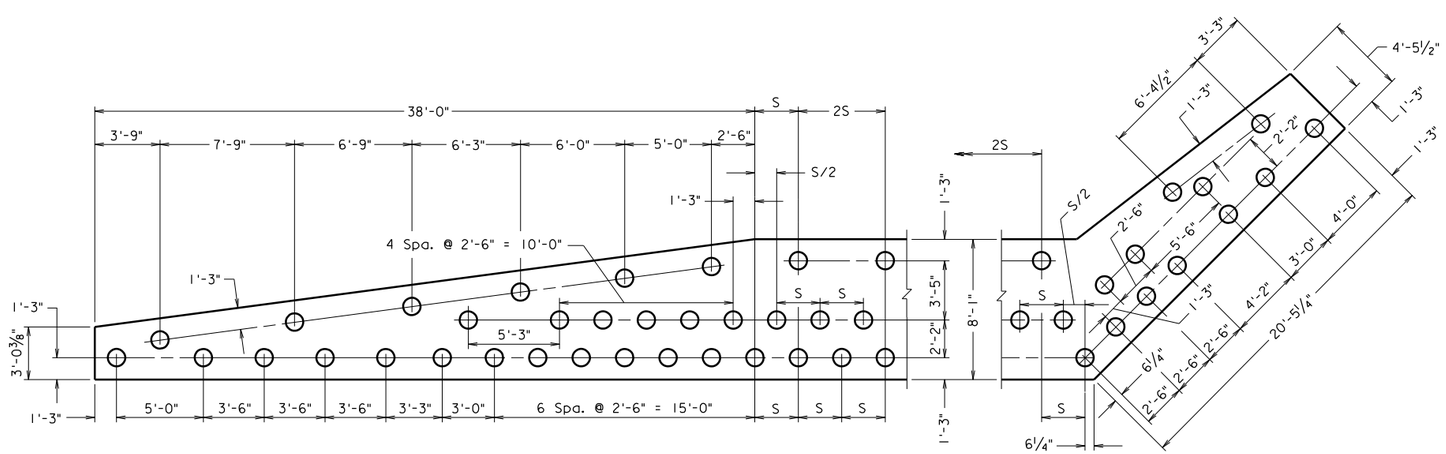

PILE PLAN

Not to scale

©2010, Commonwealth of Virginia

csapl245.dgn

CS-APL2-45 06-14-2010

Sealed and Signed by: Julius F.J. Volgyi Jr. Lic. No. 010487 On the date of June 14, 2010

A copy of the original sealed and signed standard drawing is on file in the Central Office.

VDOT S&B DIVISION RICHMOND, VA STRUCTURAL ENGINEER

No.	Description	Date
	Revisions	

COMMONWEALTH OF VIRGINIA
DEPARTMENT OF TRANSPORTATION

STRUCTURE AND BRIDGE DIVISION

ABUTMENT

Designed: .....
Drawn: .....
Checked: .....

Date	Plan No.	Sheet No.
	CS-APL2-45	

CAST-IN-PLACE CONCRETE SLAB SPANS

ABUTMENTS ON PILES
45 ° SKEW - FILL SLOPE 2: 1

NOTES TO DESIGNER:

Standard to be used when abutments are on piles.

Standard is for: 45° skew
2: 1 fill slope

TABLE OF DIMENSIONS AND QUANTITIES

ABUTMENT*					STRAIGHT WING				
H	w	W	Neat – CY per ft. of R	Ftg – CY per ft. of R	L_1	h_1	f_1	Neat CY	Footing CY
4'-0"	2'-4"	4'-6"	0.368R	0.707R	10'-0"	9"	3"	2.9	6.4
5'-0"	2'-9"	4'-6"	0.509R	0.707R	12'-0"	9"	3 1/8"	4.4	7.2
6'-0"	3'-2"	4'-11"	0.672R	0.773R	16'-0"	9"	3 1/4"	6.5	9.3
7'-0"	3'-7"	5'-4"	0.857R	0.838R	18'-0"	9"	3 3/8"	8.7	10.7
8'-0"	3'-11"	5'-8"	1.047R	0.891R	21'-0"	9"	3 3/8"	11.4	12.5
9'-0"	4'-4"	6'-1"	1.274R	0.956R	24'-0"	9"	3 3/8"	14.7	14.5
10'-0"	4'-9"	6'-6"	1.522R	1.021R	27'-0"	9"	3 3/8"	18.4	16.7
11'-0"	5'-2"	6'-11"	1.792R	1.087R	30'-0"	9"	3 3/8"	22.7	19.0
12'-0"	5'-7"	7'-4"	2.085R	1.152R	33'-0"	9"	3 3/8"	27.6	21.4
13'-0"	5'-11"	7'-8"	2.371R	1.204R	35'-0"	9"	3 3/8"	32.1	23.1
14'-0"	6'-4"	8'-1"	2.705R	1.270R	38'-0"	9"	3 3/8"	38.1	25.7

SKEWED WING					
H	L_2	h_2	f_2	Neat CY	Footing CY
4'-0"	3'-0"	2'-6"	4 7/8"	1.4	3.5
5'-0"	4'-0"	3'-0"	6 3/4"	2.1	4.1
6'-0"	5'-0"	3'-6"	8 5/8"	2.9	4.9
7'-0"	7'-0"	3'-6"	9 1/4"	4.2	6.2
8'-0"	8'-0"	4'-0"	10 3/4"	5.4	7.0
9'-0"	9'-0"	4'-6"	1'-0 5/8"	6.9	8.0
10'-0"	10'-0"	5'-0"	1'-2 5/8"	8.6	9.1
11'-0"	11'-0"	5'-6"	1'-4 1/2"	10.6	10.3
12'-0"	12'-0"	6'-0"	1'-6 1/2"	12.9	11.5
13'-0"	14'-0"	6'-0"	1'-6 1/2"	15.7	13.1
14'-0"	15'-0"	6'-6"	1'-8 1/2"	18.7	14.5

* To compute concrete quantity of the abutment, multiply volume as tabulated by R. Footing quantities do not include deductions for piles.

CAST-IN-PLACE CONCRETE SLAB SPANS

ABUTMENTS ON PILES
45 ° SKEW - FILL SLOPE 2: 1

NOTES TO DESIGNER (cont'd):

c = 4" (H = 4'-0")
c = 2 $^{1}/_{8}$" (H = 5'-0" to 14'-0")

d_1 = 3'-2" + f_1 (H = 4'-0")
d_1 = 2'-9" + f_1 (H = 5'-0" to 14'-0")

d_2 = 3'-2" + f_2 (H = 4'-0")
d_2 = 2'-9" + f_2 (H = 5'-0" to 14'-0")

g = 11" (H = 4'-0")
g = 6" (H = 5'-0" to 14'-0")

ADD THE FOLLOWING NOTES, DIMENSIONS, DETAILS, ETC. TO STANDARD:

PROJECT/TITLE BLOCKS:

Project block and title block shall be completed in accordance with Manual of the Structure and Bridge Division, Volume V – Part 2, Chapter 4.

DIMENSION DATA:

Enter H, L_1, L_2, R, W, c, d_1, d_2, g, h_1, h_2, f_1, f_2, and w dimensions in the DIMENSION DATA table.

TYPICAL BRIDGE SEATS:

If approach slab is required, replace details with cell BSA.

SECTION ON CENTERLINE:

Typical Section based on H = 11'-0" to 14'-0" with no approach slab, replace with appropriate cell if needed.

PILE PLAN:

Based on skew angle = 45° and H = 14'-0", replace the pile plan cell with the appropriate pile plan cell if needed.

STATE	FEDERAL AID ROUTE	FEDERAL AID PROJECT	STATE ROUTE	STATE PROJECT	SHEET NO.
VA.	—				

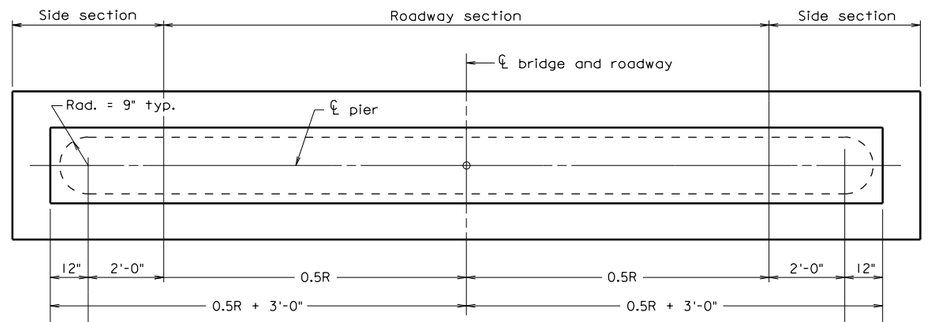

PLAN

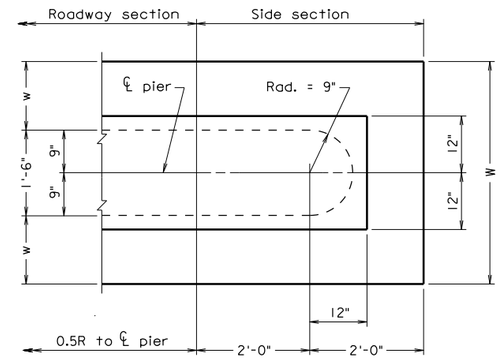

DETAIL OF PIER NOSE

Note:

¾" ø x 1'-6" plain steel dowels (max. spacing 2'-0" c-c) shall be placed at fixed bearing in each span.

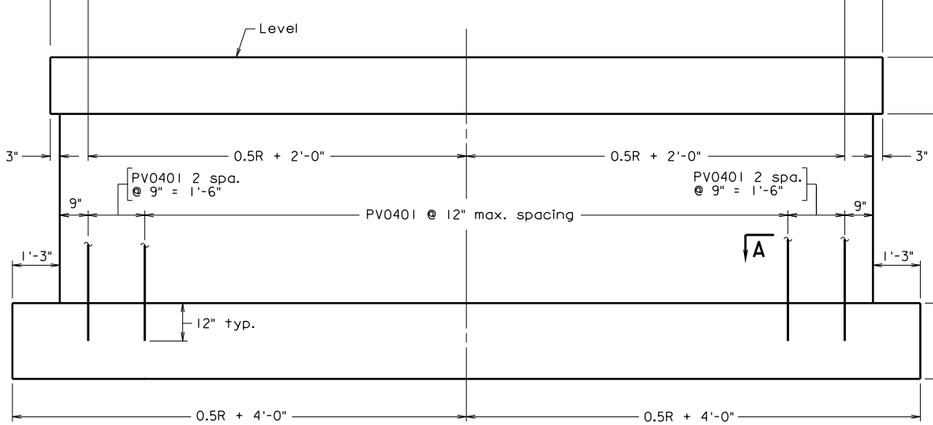

ELEVATION

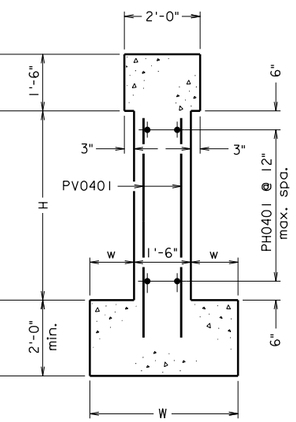

SECTION ON ℄

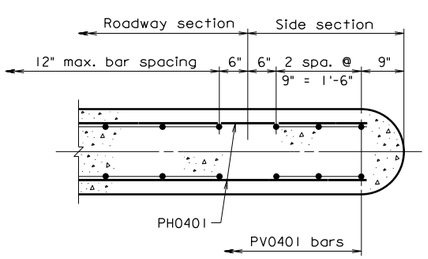

SECTION A-A

REINFORCING STEEL SCHEDULE

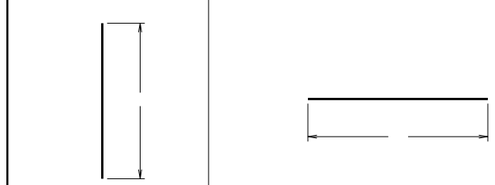

Mark	No.	Size	Pin ø	Length	Location
PH0401	·	#4	·	·	·
PV0401	·	#4	·	·	·
·	·	·	·	·	·
·	·	·	·	·	·

DIMENSION DATA
R =
H =
W =
w =

csp0.dgn

06-14-2010

CS-P-0

Sealed and Signed by:
Julius F.J. Volgyi Jr.
Lic. No. 010487
On the date of
June 14, 2010

A copy of the original sealed and signed standard drawing is on file in the Central Office.

VDOT S&B DIVISION
RICHMOND, VA
STRUCTURAL ENGINEER

Not to scale

©2010, Commonwealth of Virginia

No.	Description	Date
	Revisions	

COMMONWEALTH OF VIRGINIA
DEPARTMENT OF TRANSPORTATION

STRUCTURE AND BRIDGE DIVISION

PIERS

Designed: .....
Drawn: .....
Checked: .....

Date	Plan No.	Sheet No.
	CS-P-0	

CAST-IN-PLACE CONCRETE SLAB SPANS

PIERS
0° SKEW

NOTES TO DESIGNER:

Standard to be used when piers are on spread footings.

Standard is for: 0° skew

TABLE OF DIMENSIONS AND QUANTITIES

H	w	W	Roadway Section						
			PV0401		PH0401		Neat		Footing
			*No.	Length	No.	Length	CY	LB	CY
4'-0"	1'-2"	3'-10"	2(R+1)	5'-0"	8	R+4'-0"	0.333R	12.0R+28	0.284R
5'-0"	1'-2 $^1/_2$"	3'-11"	2(R+1)	6'-0"	10	R+4'-0"	0.389R	14.7R+35	0.290R
6'-0"	1'-3"	4'-0"	2(R+1)	7'-0"	12	R+4'-0"	0.444R	17.4R+41	0.296R
7'-0"	1'-3 $^1/_2$"	4'-1"	2(R+1)	8'-0"	14	R+4'-0"	0.500R	20.0R+48	0.302R
8'-0"	1'-4"	4'-2"	2(R+1)	9'-0"	16	R+4'-0"	0.556R	22.7R+55	0.309R
9'-0"	1'-4 $^1/_2$"	4'-3"	2(R+1)	10'-0"	18	R+4'-0"	0.611R	25.4R+61	0.315R
10'-0"	1'-5"	4'-4"	2(R+1)	11'-0"	20	R+4'-0"	0.667R	28.1R+68	0.321R
11'-0"	1'-5 $^1/_2$"	4'-5"	2(R+1)	12'-0"	22	R+4'-0"	0.722R	30.7R+75	0.327R
12'-0"	1'-6"	4'-6"	2(R+1)	13'-0"	24	R+4'-0"	0.778R	33.4R+81	0.333R
13'-0"	1'-6 $^1/_2$"	4'-7"	2(R+1)	14'-0"	26	R+4'-0"	0.833R	36.1R+88	0.340R
14'-0"	1'-7"	4'-8"	2(R+1)	15'-0"	28	R+4'-0"	0.889R	38.7R+94	0.346R

2-Side Sections					
H	PV0401		Neat		Footing
	No.	Length	CY	LB	CY
4'-0"	12	5'-0"	1.8	40	2.3
5'-0"	12	6'-0"	2.1	50	2.3
6'-0"	12	7'-0"	2.4	60	2.4
7'-0"	12	8'-0"	2.7	60	2.4
8'-0"	12	9'-0"	3.0	70	2.5
9'-0"	12	10'-0"	3.3	80	2.5
10'-0"	12	11'-0"	3.5	90	2.6
11'-0"	12	12'-0"	3.8	100	2.6
12'-0"	12	13'-0"	4.1	100	2.7
13'-0"	12	14'-0"	4.4	110	2.7
14'-0"	12	15'-0"	4.7	120	2.8

* Round number of bars to next highest whole number.

CAST-IN-PLACE CONCRETE SLAB SPANS

PIERS
0° SKEW

NOTES TO DESIGNER(cont'd):

ADD THE FOLLOWING NOTES, DIMENSIONS, DETAILS, ETC. TO STANDARD:

PROJECT/TITLE BLOCKS:

Project block and title block shall be completed in accordance with Manual of the Structure and Bridge Division, Volume V – Part 2, Chapter 4.

DIMENSION DATA:

Enter R, H, W and w dimensions in the DIMENSION DATA table.

REINFORCING STEEL SCHEDULE:

Enter No. and Length of PH0401 and PV0401 bars into the table.

STATE	FEDERAL AID ROUTE	FEDERAL AID PROJECT	STATE ROUTE	STATE PROJECT	SHEET NO.
VA.	—				

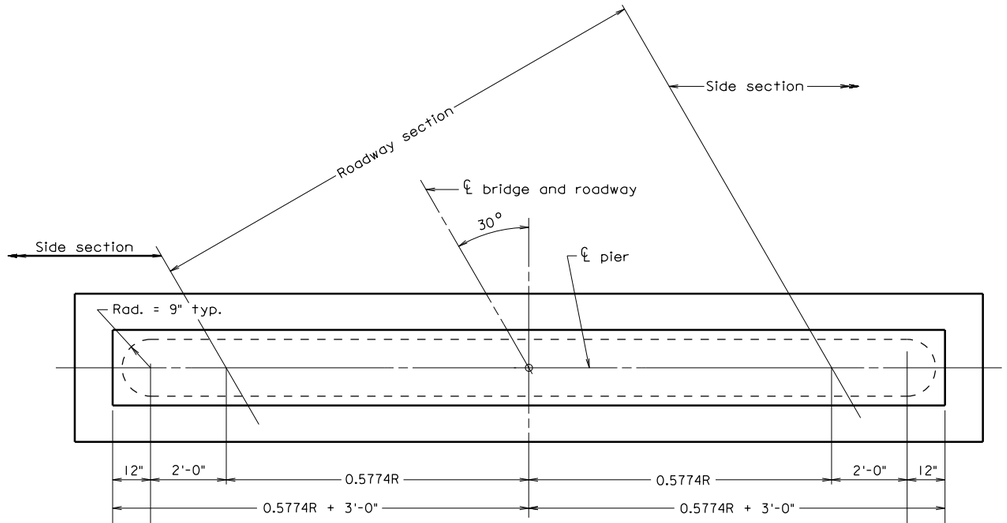

PLAN

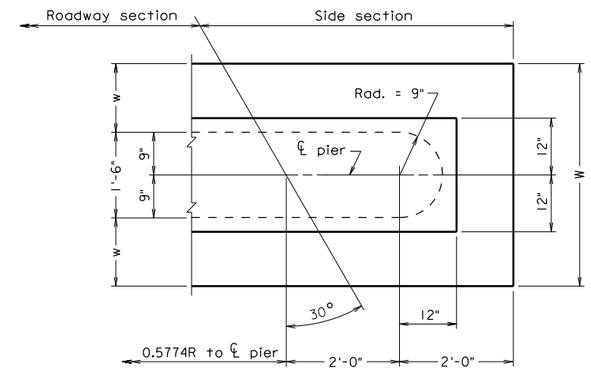

DETAIL OF PIER NOSE

Note:

3/4" ø x 1'-6" plain steel dowels (max. spacing 2'-0" c-c) shall be placed at fixed bearings.

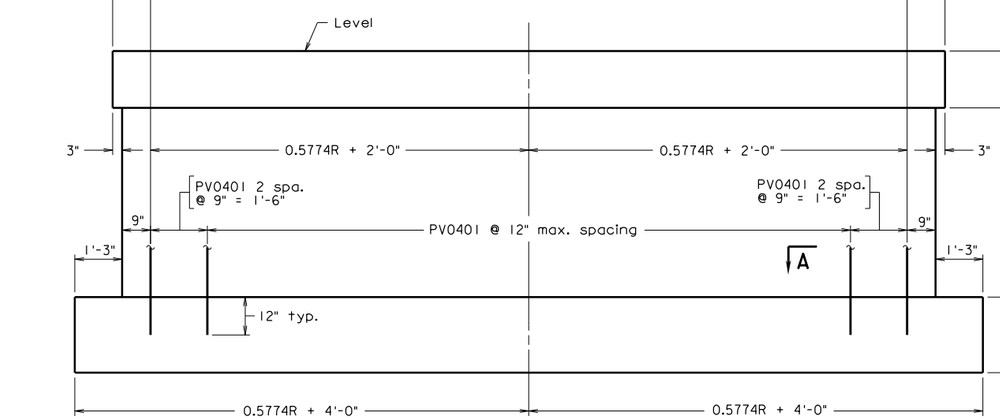

ELEVATION

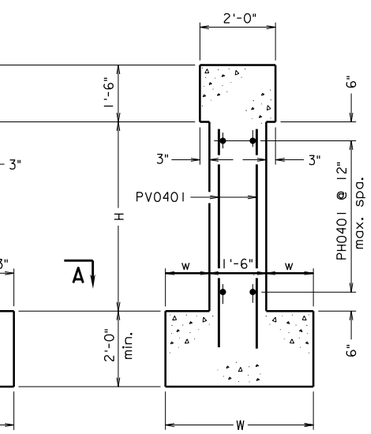

SECTION ON ℄

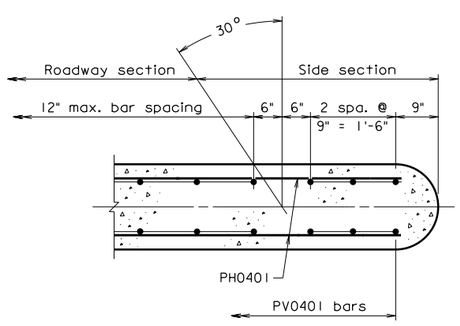

SECTION A-A

REINFORCING STEEL SCHEDULE

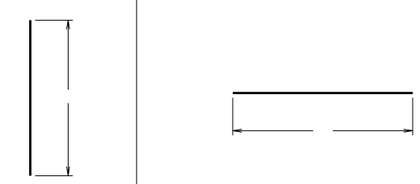

Mark	No.	Size	Pin ø	Length	Location
PH0401	·	#4	·	·	·
PV0401	·	#4	·	·	·
·	·	·	·	·	·
·	·	·	·	·	·

DIMENSION DATA
R =
H =
W =
w =

No.	Description	Date

Revisions

COMMONWEALTH OF VIRGINIA
DEPARTMENT OF TRANSPORTATION

STRUCTURE AND BRIDGE DIVISION

PIERS

Designed: .....
Drawn: .....
Checked: .....

Date	Plan No.	Sheet No.
	CS-P-30	

csp30.dgn

06-14-2010

CS-P-30

Sealed and Signed by:
Julius F.J. Volgyi Jr.
Lic. No. 010487
On the date of
June 14, 2010

A copy of the original sealed and signed standard drawing is on file in the Central Office.

VDOT S&B DIVISION
RICHMOND, VA
STRUCTURAL ENGINEER

Not to scale

©2010, Commonwealth of Virginia

CAST-IN-PLACE CONCRETE SLAB SPANS

PIERS
30° SKEW

NOTES TO DESIGNER:

Standard to be used when piers are on spread footings.

Standard is for: 30° skew

TABLE OF DIMENSIONS AND QUANTITIES									
H	w	W	Roadway Section						
			PV0401		PH0401		Neat		Footing
			*No.	Length	No.	Length	CY	LB	CY
4'-0"	1'-2"	3'-10"	2.31(R+2)	5'-0"	8	1.15R +4'-0"	0.385R	13.9R +28	0.328R
5'-0"	1'-2 $^1/_2$"	3'-11"	2.31(R+2)	6'-0"	10	1.15R +4'-0"	0.449R	17.0R +35	0.335R
6'-0"	1'-3"	4'-0"	2.31(R+2)	7'-0"	12	1.15R +4'-0"	0.513R	20.1R +41	0.342R
7'-0"	1'-3 $^1/_2$"	4'-1"	2.31(R+2)	8'-0"	14	1.15R +4'-0"	0.577R	23.1R +48	0.349R
8'-0"	1'-4"	4'-2"	2.31(R+2)	9'-0"	16	1.15R +4'-0"	0.642R	26.2R +55	0.356R
9'-0"	1'-4 $^1/_2$"	4'-3"	2.31(R+2)	10'-0"	18	1.15R +4'-0"	0.706R	29.3R +61	0.363R
10'-0"	1'-5"	4'-4"	2.31(R+2)	11'-0"	20	1.15R +4'-0"	0.770R	32.4R +68	0.370R
11'-0"	1'-5 $^1/_2$"	4'-5"	2.31(R+2)	12'-0"	22	1.15R +4'-0"	0.834R	35.5R +75	0.377R
12'-0"	1'-6"	4'-6"	2.31(R+2)	13'-0"	24	1.15R +4'-0"	0.898R	38.6R +81	0.384R
13'-0"	1'-6 $^1/_2$"	4'-7"	2.31(R+2)	14'-0"	26	1.15R +4'-0"	0.962R	41.7R +88	0.391R
14'-0"	1'-7"	4'-8"	2.31(R+2)	15'-0"	28	1.15R +4'-0"	1.027R	44.7R +95	0.399R

2-Side Sections					
H	PV0401		Neat		Footing
	No.	Length	CY	LB	CY
4'-0"	12	5'-0"	1.8	40	2.3
5'-0"	12	6'-0"	2.1	50	2.3
6'-0"	12	7'-0"	2.4	60	2.4
7'-0"	12	8'-0"	2.7	60	2.4
8'-0"	12	9'-0"	3.0	70	2.5
9'-0"	12	10'-0"	3.3	80	2.5
10'-0"	12	11'-0"	3.5	90	2.6
11'-0"	12	12'-0"	3.8	100	2.6
12'-0"	12	13'-0"	4.1	100	2.7
13'-0"	12	14'-0"	4.4	110	2.7
14'-0"	12	15'-0"	4.7	120	2.8

*Round number of bars to next highest whole number.

CAST-IN-PLACE CONCRETE SLAB SPANS

PIERS
30° SKEW

NOTES TO DESIGNER(cont'd):

ADD THE FOLLOWING NOTES, DIMENSIONS, DETAILS, ETC. TO STANDARD:

PROJECT/TITLE BLOCKS:

Project block and title block shall be completed in accordance with Manual of the Structure and Bridge Division, Volume V – Part 2, Chapter 4.

DIMENSION DATA:

Enter R, H, W and w dimensions in the DIMENSION DATA table.

REINFORCING STEEL SCHEDULE:

Enter No. and Length of PH0401 and PV0401 bars into the table.

STATE	FEDERAL AID ROUTE	FEDERAL AID PROJECT	STATE ROUTE	STATE PROJECT	SHEET NO.
VA.	—				

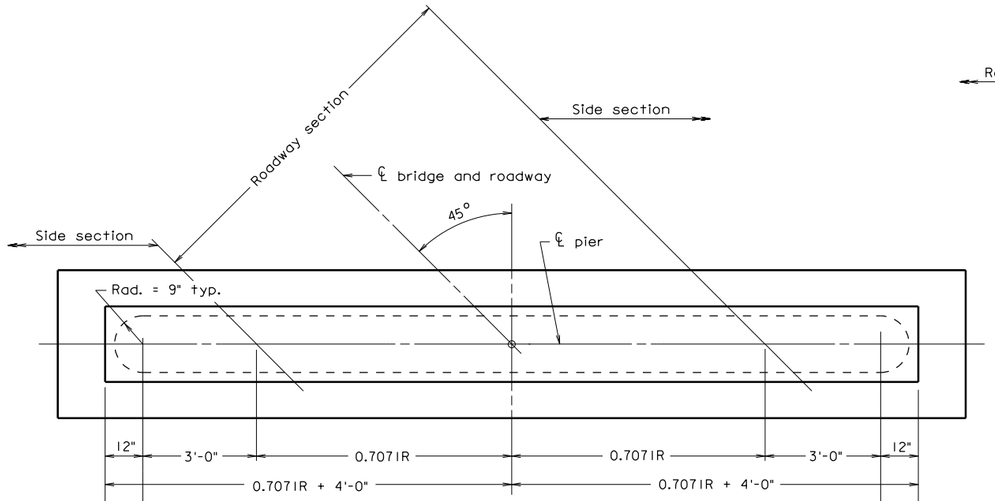

PLAN

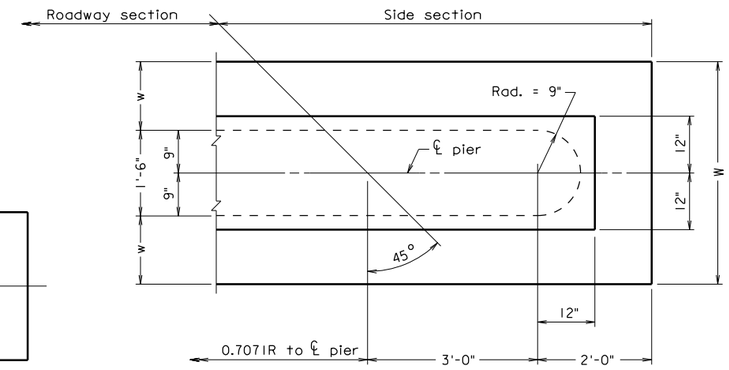

DETAIL OF PIER NOSE

Note:

3/4" ø x 1'-6" plain steel dowels (max. spacing 2'-0" c-c) shall be place at Fixed Bearing in each span.

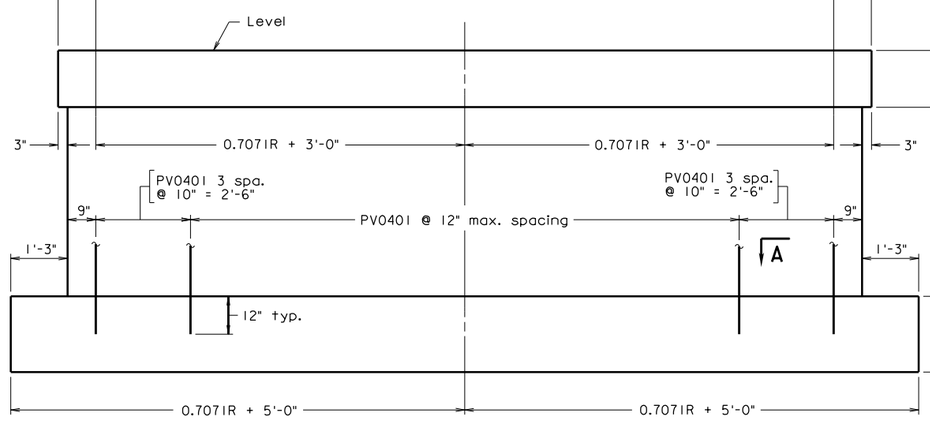

ELEVATION

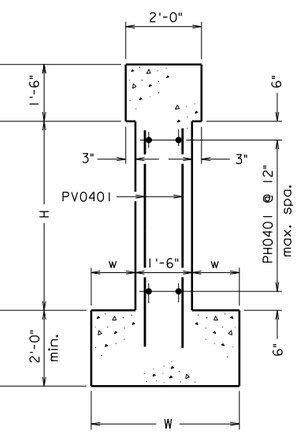

SECTION ON ℄

REINFORCING STEEL SCHEDULE

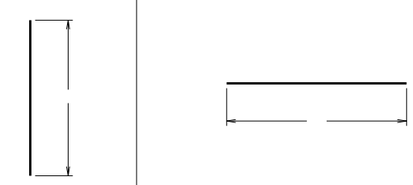

PV0401 PH0401

Mark	No.	Size	Pin ø	Length	Location
PH0401	·	#4	·	·	·
PV0401	·	#4	·	·	·
·	·	·	·	·	·
·	·	·	·	·	·

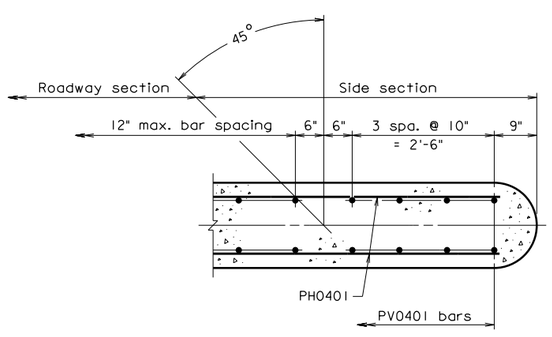

SECTION A-A

DIMENSION DATA
R =
H =
W =
w =

csp45.dgn

06-14-2010

CS-P-45

Sealed and Signed by:
Julius F.J. Volgyi Jr.
Lic. No. 010487
On the date of
June 14, 2010

A copy of the original sealed and signed standard drawing is on file in the Central Office.

VDOT S&B DIVISION
RICHMOND, VA
STRUCTURAL ENGINEER

Not to scale

©2010, Commonwealth of Virginia

No.	Description	Date
	Revisions	

COMMONWEALTH OF VIRGINIA
DEPARTMENT OF TRANSPORTATION

STRUCTURE AND BRIDGE DIVISION

PIERS

Designed: .....
Drawn: .....
Checked: .....

Date	Plan No.	Sheet No.
	CS-P-45	

CAST-IN-PLACE CONCRETE SLAB SPANS

PIERS
45° SKEW

NOTES TO DESIGNER:

Standard to be used when piers are spread footings.

Standard is for: 45° skew

TABLE OF DIMENSIONS AND QUANTITIES									
H	w	W	Roadway Section						
			PV0401		PH0401		Neat		Footing
			*No.	Length	No.	Length	CY	LB	CY
4'-0"	1'-2"	3'-10"	2.83(R+2)	5'-0"	8	1.41R +6'-0"	0.471R	17.0R +39	0.402R
5'-0"	1'-2 $^1/_2$"	3'-11"	2.83(R+2)	6'-0"	10	1.41R +6'-0"	0.550R	20.8R +48	0.410R
6'-0"	1'-3"	4'-0"	2.83(R+2)	7'-0"	12	1.41R +6'-0"	0.628R	24.6R +57	0.419R
7'-0"	1'-3 $^1/_2$"	4'-1"	2.83(R+2)	8'-0"	14	1.41R +6'-0"	0.707R	28.3R +67	0.428R
8'-0"	1'-4"	4'-2"	2.83(R+2)	9'-0"	16	1.41R +6'-0"	0.786R	32.1R +76	0.437R
9'-0"	1'-4 $^1/_2$"	4'-3"	2.83(R+2)	10'-0"	18	1.41R +6'-0"	0.864R	35.9R +86	0.445R
10'-0"	1'-5"	4'-4"	2.83(R+2)	11'-0"	20	1.41R +6'-0"	0.943R	39.7R +95	0.454R
11'-0"	1'-5 $^1/_2$"	4'-5"	2.83(R+2)	12'-0"	22	1.41R +6'-0"	1.021R	43.4R +104	0.463R
12'-0"	1'-6"	4'-6"	2.83(R+2)	13'-0"	24	1.41R +6'-0"	1.100R	47.2R +114	0.471R
13'-0"	1'-6 $^1/_2$"	4'-7"	2.83(R+2)	14'-0"	26	1.41R +6'-0"	1.178R	51.0R +123	0.480R
14'-0"	1'-7"	4'-8"	2.83(R+2)	15'-0"	28	1.41R +6'-0"	1.257R	54.8R +132	0.489R

2-Side Sections					
H	PV0401		Neat		Footing
	No.	Length	CY	LB	CY
4'-0"	16	5'-0"	2.5	50	2.8
5'-0"	16	6'-0"	2.9	60	2.9
6'-0"	16	7'-0"	3.3	70	3.0
7'-0"	16	8'-0"	3.7	90	3.0
8'-0"	16	9'-0"	4.1	100	3.1
9'-0"	16	10'-0"	4.5	110	3.1
10'-0"	16	11'-0"	4.9	120	3.2
11'-0"	16	12'-0"	5.3	130	3.3
12'-0"	16	13'-0"	5.7	140	3.3
13'-0"	16	14'-0"	6.1	150	3.4
14'-0"	16	15'-0"	6.5	160	3.5

*Round number of bars to next highest whole number.

CAST-IN-PLACE CONCRETE SLAB SPANS

PIERS
45° SKEW

NOTES TO DESIGNER(cont'd):

ADD THE FOLLOWING NOTES, DIMENSIONS, DETAILS, ETC. TO STANDARD:

PROJECT/TITLE BLOCKS:

Project block and title block shall be completed in accordance with Manual of the Structure and Bridge Division, Volume V – Part 2, Chapter 4.

DIMENSION DATA:

Enter R, H, W and w dimensions in the DIMENSION DATA table.

REINFORCING STEEL SCHEDULE:

Enter No. and Length of PH0401 and PV0401 bars into the table.

STATE	FEDERAL AID ROUTE	FEDERAL AID PROJECT	STATE ROUTE	STATE PROJECT	SHEET NO.
VA.	—				

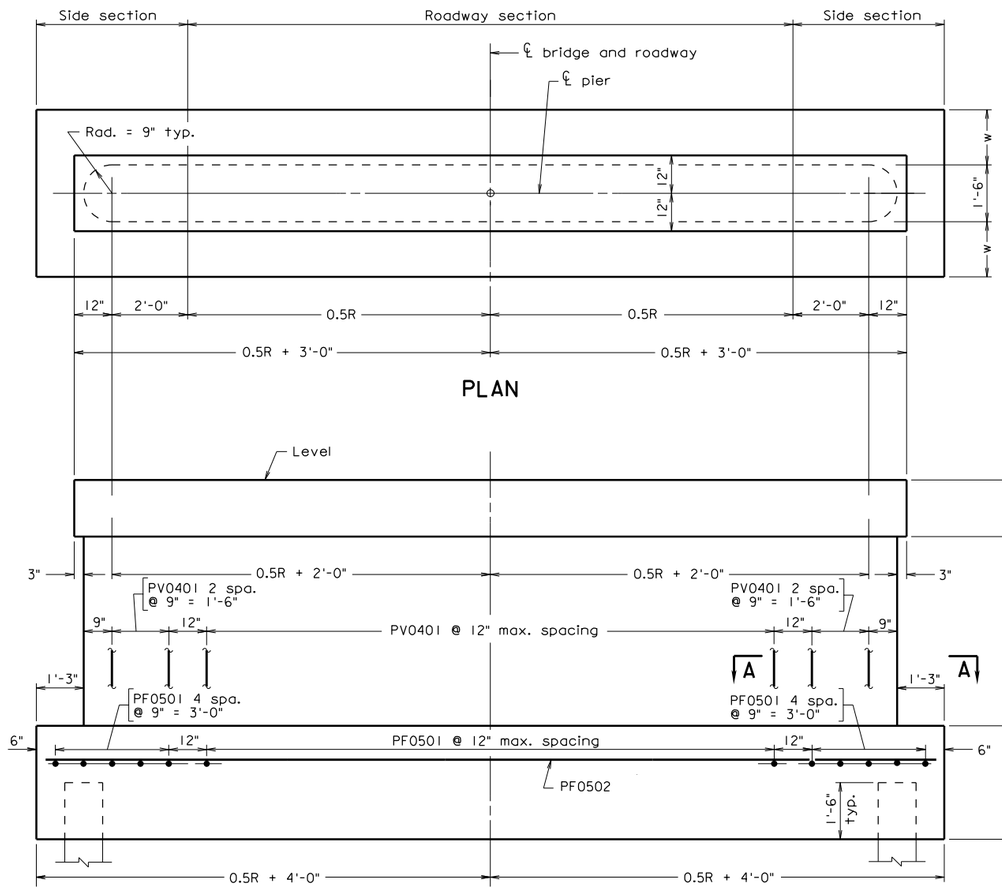

PLAN

ELEVATION

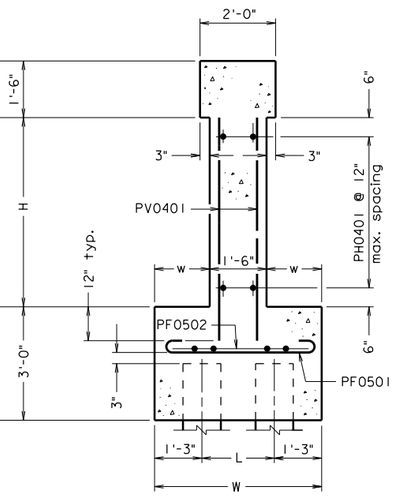

SECTION ON ℄

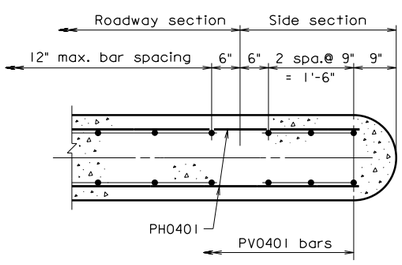

SECTION A-A

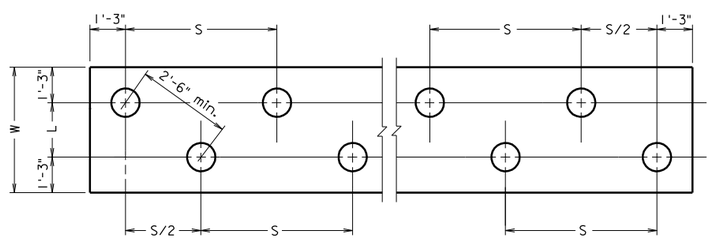

PILE PLAN

DIMENSION DATA
H =
L =
R =
W =
w =
S =

Note:

3/4" ø x 1'-6" plain steel dowels (max. spacing 2'-0" c-c) shall be placed at Fixed Bearing in each span.

REINFORCING STEEL SCHEDULE

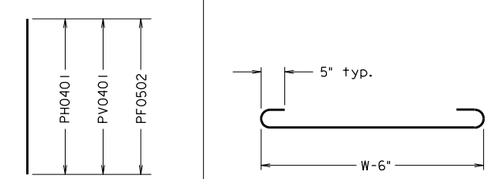

PH0401, PV0401 and PF0502 | PF0501

Mark	No.	Size	Pin ø	Length	Location
PH0401	·	#4	·	·	·
PV0401	·	#4	·	·	·
PF0501	·	#5	3 3/4"	·	·
PF0502	·	#5	·	·	·
·	·	·	·	·	·
·	·	·	·	·	·

cspp0.dgn

06-14-2010

CS-PP-0

Sealed and Signed by: Julius F.J. Volgyi Jr. Lic. No. 010487 On the date of June 14, 2010

A copy of the original sealed and signed standard drawing is on file in the Central Office.

VDOT S&B DIVISION
RICHMOND, VA
STRUCTURAL ENGINEER

Not to scale

©2010, Commonwealth of Virginia

No.	Description	Date

Revisions

COMMONWEALTH OF VIRGINIA
DEPARTMENT OF TRANSPORTATION

STRUCTURE AND BRIDGE DIVISION

PIERS

Designed: .....
Drawn: .....
Checked: .....

Date	Plan No.	Sheet No.
	CS-PP-0	

CAST-IN-PLACE CONCRETE SLAB SPANS

PIERS ON PILES
0° SKEW

NOTES TO DESIGNER:

Standard to be used when piers are on piles.

Standard is for: 0° skew

TABLE OF DIMENSIONS AND QUANTITIES

H	w	W	L	S**(Max. Pile Spa.)	Roadway Section			
					PV0401		PH0401	
					No. *	Length	No.	Length
4'-0"	1'-5"	4'-4"	1'-10"	5'-6"	2R+2	5'-0"	8	R+4'-0"
5'-0"	1'-5 1/2"	4'-5"	1'-11"	5'-4"	2R+2	6'-0"	10	R+4'-0"
6'-0"	1'-6"	4'-6"	2'-0"	5'-3"	2R+2	7'-0"	12	R+4'-0"
7'-0"	1'-6 1/2"	4'-7"	2'-1"	5'-1"	2R+2	8'-0"	14	R+4'-0"
8'-0"	1'-7"	4'-8"	2'-2"	4'-11"	2R+2	9'-0"	16	R+4'-0"
9'-0"	1'-7 1/2"	4'-9"	2'-3"	4'-10"	2R+2	10'-0"	18	R+4'-0"
10'-0"	1'-8"	4'-10"	2'-4"	4'-9"	2R+2	11'-0"	20	R+4'-0"
11'-0"	1'-8 1/2"	4'-11"	2'-5"	4'-7"	2R+2	12'-0"	22	R+4'-0"
12'-0"	1'-9"	5'-0"	2'-6"	4'-6"	2R+2	13'-0"	24	R+4'-0"
13'-0"	1'-9 1/2"	5'-1"	2'-7"	4'-4"	2R+2	14'-0"	26	R+4'-0"
14'-0"	1'-10"	5'-2"	2'-8"	4'-3"	2R+2	15'-0"	28	R+4'-0"

H	Roadway Section							
	PF0501		PF0502		Neat		Footing	
	No. *	Length	No.	Length	CY	LB	CY	LB
4'-0"	R+1	5'-0"	4	R+7'-6"	0.333R	12.0R+28	0.481R	9.4R+37
5'-0"	R+1	5'-1"	4	R+7'-6"	0.389R	14.7R+35	0.491R	9.5R+37
6'-0"	R+1	5'-2"	4	R+7'-6"	0.444R	17.4R+41	0.500R	9.6R+37
7'-0"	R+1	5'-3"	4	R+7'-6"	0.500R	20.0R+48	0.509R	9.6R+37
8'-0"	R+1	5'-4"	4	R+7'-6"	0.556R	22.7R+55	0.519R	9.7R+37
9'-0"	R+1	5'-5"	4	R+7'-6"	0.611R	25.4R+61	0.528R	9.8R+37
10'-0"	R+1	5'-6"	4	R+7'-6"	0.667R	28.1R+68	0.537R	9.9R+37
11'-0"	R+1	5'-7"	4	R+7'-6"	0.722R	30.7R+75	0.546R	10.0R+37
12'-0"	R+1	5'-8"	4	R+7'-6"	0.778R	33.4R+81	0.556R	10.1R+37
13'-0"	R+1	5'-9"	4	R+7'-6"	0.833R	36.1R+88	0.565R	10.2R+37
14'-0"	R+1	5'-10"	4	R+7'-6"	0.889R	38.7+95	0.574R	10.3R+37

* Round number of bars to next highest whole number.
** For CS-27-0 or CS-27V-0, use 0.875xS to nearest inch.
** For CS-32-0 or CS-32V-0, use 0.815xS to nearest inch.

Footing quantities do not include deductions for piles.

CAST-IN-PLACE CONCRETE SLAB SPANS

PIERS ON PILES
0° SKEW

NOTES TO DESIGNER(cont'd):

TABLE OF DIMENSIONS AND QUANTITIES (Cont'd)								
H	2-SIDE SECTIONS							
	PV0401		PF0501		Neat		Footing	
	No.	Length	No.	Length	CY	LB	CY	LB
4'-0"	12	5'-0"	10	5'-0"	1.7	40	3.8	50
5'-0"	12	6'-0"	10	5'-1"	2.0	50	3.9	50
6'-0"	12	7'-0"	10	5'-2"	2.3	60	4.0	50
7'-0"	12	8'-0"	10	5'-3"	2.6	60	4.1	50
8'-0"	12	9'-0"	10	5'-4"	2.8	70	4.1	60
9'-0"	12	10'-0"	10	5'-5"	3.1	80	4.2	60
10'-0"	12	11'-0"	10	5'-6"	3.4	90	4.3	60
11'-0"	12	12'-0"	10	5'-7"	3.7	100	4.4	60
12'-0"	12	13'-0"	10	5'-8"	4.0	100	4.4	60
13'-0"	12	14'-0"	10	5'-9"	4.3	110	4.5	60
14'-0"	12	15'-0"	10	5'-10"	4.6	120	4.6	60

ADD THE FOLLOWING NOTES, DIMENSIONS, DETAILS, ETC. TO STANDARD:

PROJECT/TITLE BLOCKS:

Project block and title block shall be completed in accordance with Manual of the Structure and Bridge Division, Volume V – Part 2, Chapter 4.

DIMENSION DATA:

Enter H, L, R, W, s and w dimensions in the DIMENSION DATA table.

REINFORCING STEEL SCHEDULE:

Enter No. and Length of PH0401, PV0401, PF0501 and PF0502 bars into the table.

PILE PLAN:

Based on skew angle = 0° and H = 4'-0" to 14'-0", replace the pile plan cell with the appropriate pile plan cell if needed.

STATE	FEDERAL AID ROUTE	FEDERAL AID PROJECT	STATE ROUTE	STATE PROJECT	SHEET NO.
VA.	—				

Note:

3/4" ø x 1'-6" plain steel dowels (max. spacing 2'-0" c-c) shall be placed at Fixed Bearing in each span.

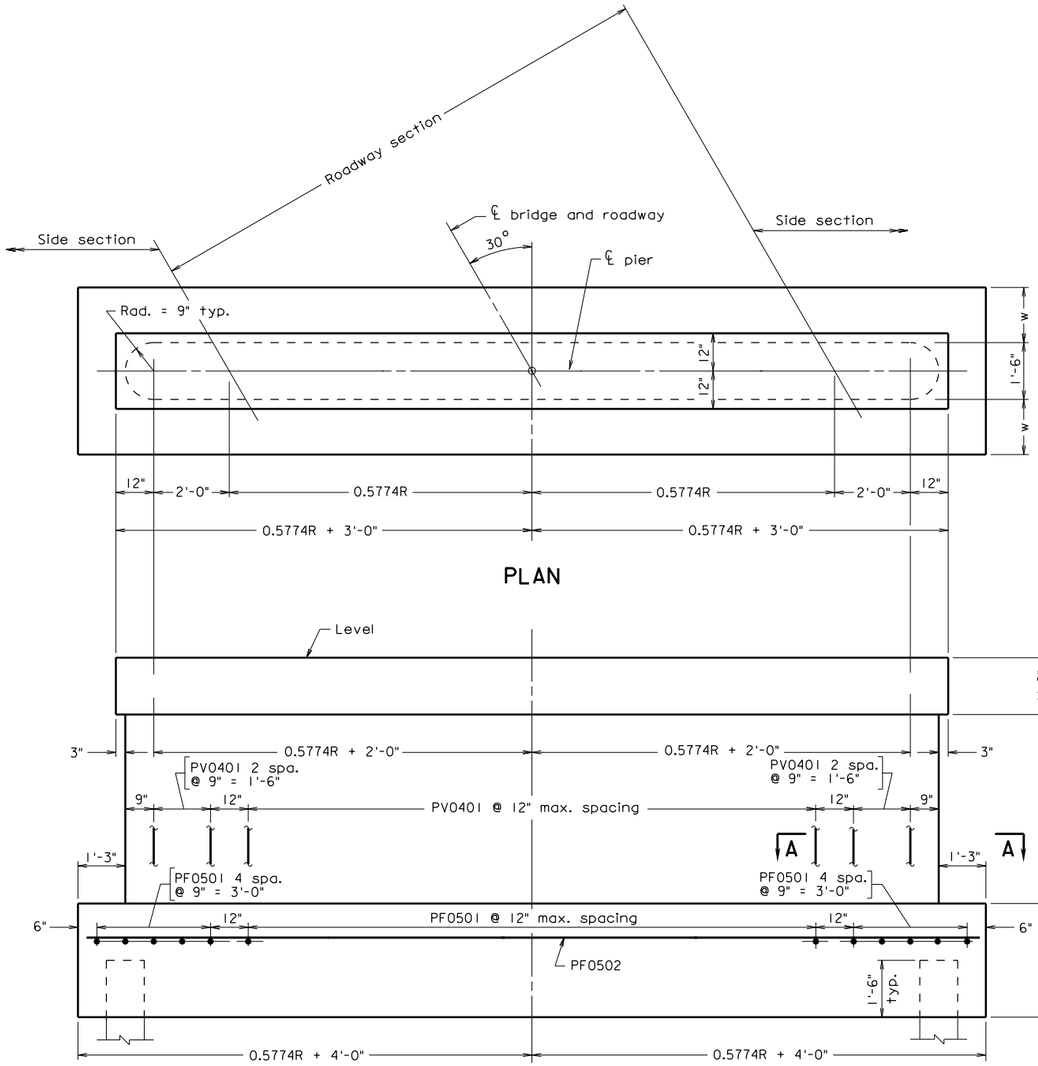

DIMENSION DATA
H =
L =
R =
W =
w =
S =

REINFORCING STEEL SCHEDULE

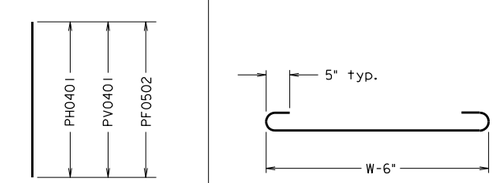

PH0401, PV0401 and PF0502 | PF0501

Mark	No.	Size	Pin ø	Length	Location
PH0401	·	#4	·	·	·
PV0401	·	#4	·	·	·
PF0501	·	#5	3 3/4"	·	·
PF0502	·	#5	·	·	·
·	·	·	·	·	·
·	·	·	·	·	·

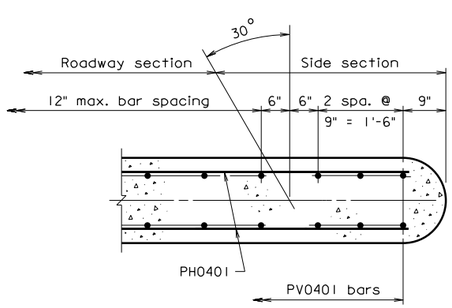

SECTION A-A

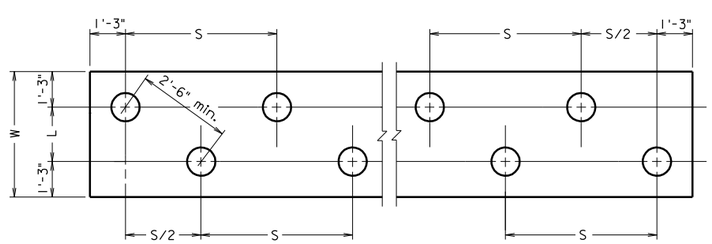

PILE PLAN

Not to scale

©2010, Commonwealth of Virginia

cspp30.dgn

06-14-2010

CS-PP-30

Sealed and Signed by:
Julius F.J. Volgyi Jr.
Lic. No. 010487
On the date of
June 14, 2010

A copy of the original sealed and signed standard drawing is on file in the Central Office.

VDOT S&B DIVISION
RICHMOND, VA
STRUCTURAL ENGINEER

No.	Description	Date
	Revisions	

COMMONWEALTH OF VIRGINIA
DEPARTMENT OF TRANSPORTATION

STRUCTURE AND BRIDGE DIVISION

PIERS

Designed: .....
Drawn: .....
Checked: .....

Date	Plan No.	Sheet No.
	CS-PP-30	

CAST-IN-PLACE CONCRETE SLAB SPANS

PIERS ON PILES
30° SKEW

NOTES TO DESIGNER:

Standard to be used when piers are on piles.

Standard is for: 30° skew

TABLE OF DIMENSIONS AND QUANTITIES

H	w	W	L	S**(Max. Pile Spa.)	Roadway Section			
					PV0401		PH0401	
					No. *	Length	No.	Length
4'-0"	1'-5"	4'-4"	1'-10"	5'-6"	2.31R+2	5'-0"	8	1.15R+4'-0"
5'-0"	1'-5 1/2"	4'-5"	1'-11"	5'-4"	2.31R+2	6'-0"	10	1.15R+4'-0"
6'-0"	1'-6"	4'-6"	2'-0"	5'-3"	2.31R+2	7'-0"	12	1.15R+4'-0"
7'-0"	1'-6 1/2"	4'-7"	2'-1"	5'-1"	2.31R+2	8'-0"	14	1.15R+4'-0"
8'-0"	1'-7"	4'-8"	2'-2"	4'-11"	2.31R+2	9'-0"	16	1.15R+4'-0"
9'-0"	1'-7 1/2"	4'-9"	2'-3"	4'-10"	2.31R+2	10'-0"	18	1.15R+4'-0"
10'-0"	1'-8"	4'-10"	2'-4"	4'-9"	2.31R+2	11'-0"	20	1.15R+4'-0"
11'-0"	1'-8 1/2"	4'-11"	2'-5"	4'-7"	2.31R+2	12'-0"	22	1.15R+4'-0"
12'-0"	1'-9"	5'-0"	2'-6"	4'-6"	2.31R+2	13'-0"	24	1.15R+4'-0"
13'-0"	1'-9 1/2"	5'-1"	2'-7"	4'-4"	2.31R+2	14'-0"	26	1.15R+4'-0"
14'-0"	1'-10"	5'-2"	2'-8"	4'-3"	2.31R+2	15'-0"	28	1.15R+4'-0"

H	Roadway Section							
	PF0501		PF0502		Neat		Footing	
	No. *	Length	No.	Length	CY	LB	CY	LB
4'-0"	1.15R+1	5'-0"	4	1.15R+7'-6"	0.385R	13.9R+28	0.555R	10.8R+37
5'-0"	1.15R+1	5'-1"	4	1.15R+7'-6"	0.449R	17.0R+35	0.567R	10.9R+37
6'-0"	1.15R+1	5'-2"	4	1.15R+7'-6"	0.513R	20.1R+41	0.577R	11.0R+37
7'-0"	1.15R+1	5'-3"	4	1.15R+7'-6"	0.577R	23.1R+48	0.588R	11.1R+37
8'-0"	1.15R+1	5'-4"	4	1.15R+7'-6"	0.642R	26.2R+55	0.599R	11.2R+37
9'-0"	1.15R+1	5'-5"	4	1.15R+7'-6"	0.706R	29.3R+61	0.610R	11.3R+37
10'-0"	1.15R+1	5'-6"	4	1.15R+7'-6"	0.770R	32.3R+68	0.620R	11.4R+37
11'-0"	1.15R+1	5'-7"	4	1.15R+7'-6"	0.834R	35.5R+75	0.630R	11.5R+37
12'-0"	1.15R+1	5'-8"	4	1.15R+7'-6"	0.898R	38.6R+81	0.640R	11.6R+37
13'-0"	1.15R+1	5'-9"	4	1.15R+7'-6"	0.962R	41.7R+88	0.652R	11.7R+37
14'-0"	1.15R+1	5'-10"	4	1.15R+7'-6"	1.027R	44.7+95	0.663R	11.8R+37

* Round number of bars to next highest whole number.
** For CS-27-30 or CS-27V-30, use 0.875xS to nearest inch.
** For CS-32-30 or CS-32V-30, use 0.815xS to nearest inch.

Footing quantities do not include deductions to piles.

CAST-IN-PLACE CONCRETE SLAB SPANS

PIERS ON PILES
30° SKEW

NOTES TO DESIGNER(cont'd):

TABLE OF DIMENSIONS AND QUANTITIES (Cont'd)								
H	2-SIDE SECTIONS							
	PV0401		PF0501		Neat		Footing	
	No.	Length	No.	Length	CY	LB	CY	LB
4'-0"	12	5'-0"	10	5'-0"	1.7	40	3.8	50
5'-0"	12	6'-0"	10	5'-1"	2.0	50	3.9	50
6'-0"	12	7'-0"	10	5'-2"	2.3	60	4.0	50
7'-0"	12	8'-0"	10	5'-3"	2.6	60	4.1	50
8'-0"	12	9'-0"	10	5'-4"	2.8	70	4.1	60
9'-0"	12	10'-0"	10	5'-5"	3.1	80	4.2	60
10'-0"	12	11'-0"	10	5'-6"	3.4	90	4.3	60
11'-0"	12	12'-0"	10	5'-7"	3.7	100	4.4	60
12'-0"	12	13'-0"	10	5'-8"	4.0	100	4.4	60
13'-0"	12	14'-0"	10	5'-9"	4.3	110	4.5	60
14'-0"	12	15'-0"	10	5'-10"	4.6	120	4.6	60

ADD THE FOLLOWING NOTES, DIMENSIONS, DETAILS, ETC. TO STANDARD:

PROJECT/TITLE BLOCKS:

Project block and title block shall be completed in accordance with Manual of the Structure and Bridge Division, Volume V – Part 2, Chapter 4.

DIMENSION DATA:

Enter H, L, R, W, s and w dimensions in the DIMENSION DATA table.

REINFORCING STEEL SCHEDULE:

Enter No. and Length of PH0401, PV0401, PF0501 and PF0502 bars into the table.

PILE PLAN:

Based on skew angle = 30° and H = 4'-0" to 14'-0", replace the pile plan cell with the appropriate pile plan cell if needed.

STATE	FEDERAL AID ROUTE	FEDERAL AID PROJECT	STATE ROUTE	STATE PROJECT	SHEET NO.
VA.	—				

Note:

¾" ø x 1'-6" plain steel dowels (max. spacing 2'-0" c-c) shall be placed at Fixed Bearing in each span.

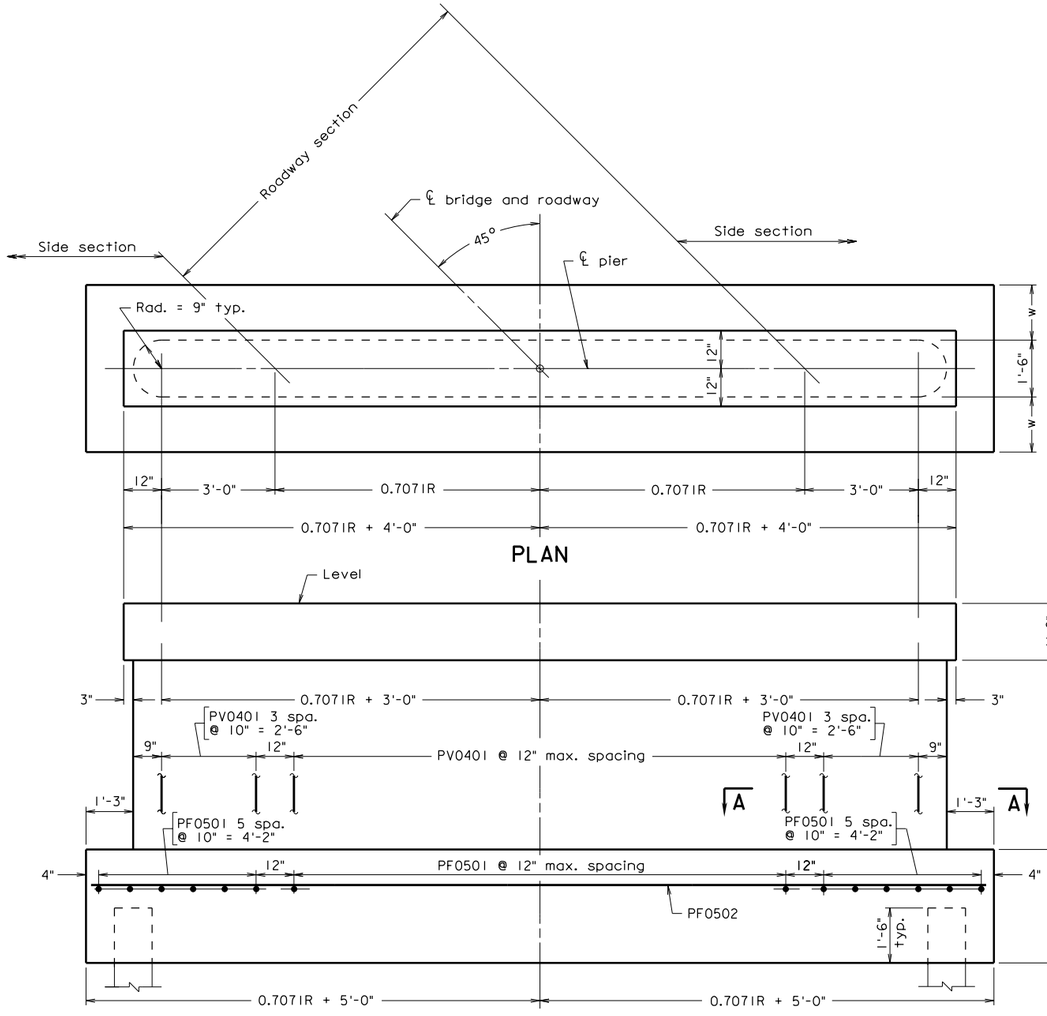

ELEVATION

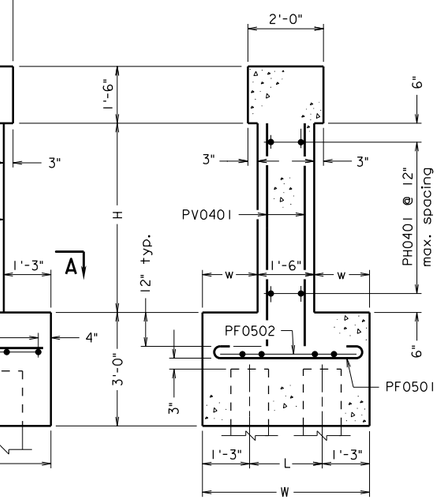

SECTION ON ℄

DIMENSION DATA
H =
L =
R =
W =
w =
S =

REINFORCING STEEL SCHEDULE

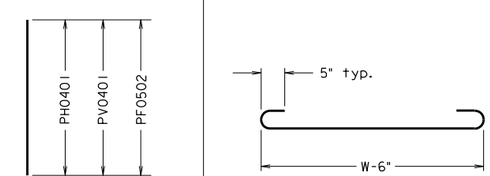

PH0401, PV0401 and PF0502 | PF0501

Mark	No.	Size	Pin ø	Length	Location
PH0401	·	#4	·	·	·
PV0401	·	#4	·	·	·
PF0501	·	#5	3¾"	·	·
PF0502	·	#5	·	·	·
·	·	·	·	·	·
·	·	·	·	·	·

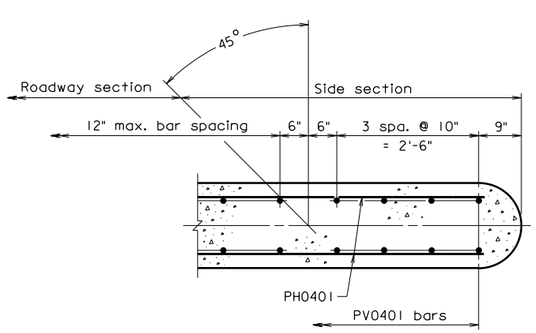

SECTION A-A

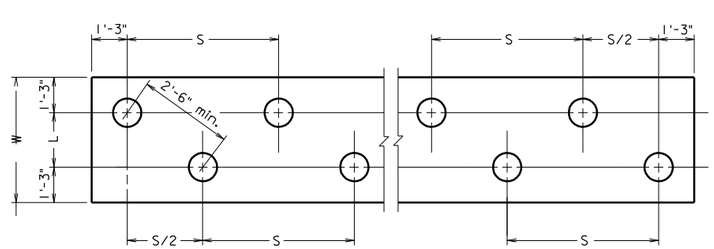

PILE PLAN

Not to scale

©2010, Commonwealth of Virginia

cspp45.dgn

06-14-2010

CS-PP-45

Sealed and Signed by:
Julius F.J. Volgyi Jr.
Lic. No. 010487
On the date of
June 14, 2010

A copy of the original sealed and signed standard drawing is on file in the Central Office.

VDOT S&B DIVISION
RICHMOND, VA
STRUCTURAL ENGINEER

No.	Description	Date
	Revisions	

COMMONWEALTH OF VIRGINIA
DEPARTMENT OF TRANSPORTATION

STRUCTURE AND BRIDGE DIVISION

PIERS

Designed: .....
Drawn: .....
Checked: .....

Date	Plan No.	Sheet No.
	CS-PP-45	

CAST-IN-PLACE CONCRETE SLAB SPANS

PIERS ON PILES
45° SKEW

NOTES TO DESIGNER:

Standard to be used when piers are on piles.

Standard is for: 45° skew

TABLE OF DIMENSIONS AND QUANTITIES

H	w	W	L	S**(Max. Pile Spa.)	Roadway Section			
					PV0401		PH0401	
					No. *	Length	No.	Length
4'-0"	1'-5"	4'-4"	1'-10"	5'-6"	2.83R+2	5'-0"	8	1.41R+6'-0"
5'-0"	1'-5 1/2"	4'-5"	1'-11"	5'-4"	2.83R+2	6'-0"	10	1.41R+6'-0"
6'-0"	1'-6"	4'-6"	2'-0"	5'-3"	2.83R+2	7'-0"	12	1.41R+6'-0"
7'-0"	1'-6 1/2"	4'-7"	2'-1"	5'-1"	2.83R+2	8'-0"	14	1.41R+6'-0"
8'-0"	1'-7"	4'-8"	2'-2"	4'-11"	2.83R+2	9'-0"	16	1.41R+6'-0"
9'-0"	1'-7 1/2"	4'-9"	2'-3"	4'-10"	2.83R+2	10'-0"	18	1.41R+6'-0"
10'-0"	1'-8"	4'-10"	2'-4"	4'-9"	2.83R+2	11'-0"	20	1.41R+6'-0"
11'-0"	1'-8 1/2"	4'-11"	2'-5"	4'-7"	2.83R+2	12'-0"	22	1.41R+6'-0"
12'-0"	1'-9"	5'-0"	2'-6"	4'-6"	2.83R+2	13'-0"	24	1.41R+6'-0"
13'-0"	1'-9 1/2"	5'-1"	2'-7"	4'-4"	2.83R+2	14'-0"	26	1.41R+6'-0"
14'-0"	1'-10"	5'-2"	2'-8"	4'-3"	2.83R+2	15'-0"	28	1.41R+6'-0"

H	Roadway Section							
	PF0501		PF0502		Neat		Footing	
	No. *	Length	No.	Length	CY	LB	CY	LB
4'-0"	1.41R+1	5'-0"	4	1.41R+9'-6"	0.471R	17.0R+39	0.680R	13.2R+45
5'-0"	1.41R+1	5'-1"	4	1.41R+9'-6"	0.550R	20.8R+48	0.694R	13.4R+45
6'-0"	1.41R+1	5'-2"	4	1.41R+9'-6"	0.628R	24.5R+58	0.707R	13.5R+45
7'-0"	1.41R+1	5'-3"	4	1.41R+9'-6"	0.707R	28.3R+67	0.720R	13.6R+45
8'-0"	1.41R+1	5'-4"	4	1.41R+9'-6"	0.786R	32.1R+76	0.734R	13.7R+45
9'-0"	1.41R+1	5'-5"	4	1.41R+9'-6"	0.864R	35.9R+86	0.747R	13.9R+45
10'-0"	1.41R+1	5'-6"	4	1.41R+9'-6"	0.943R	39.6R+95	0.759R	14.0R+45
11'-0"	1.41R+1	5'-7"	4	1.41R+9'-6"	1.021R	43.4R+104	0.772R	14.1R+45
12'-0"	1.41R+1	5'-8"	4	1.41R+9'-6"	1.100R	47.1R+114	0.786R	14.2R+45
13'-0"	1.41R+1	5'-9"	4	1.41R+9'-6"	1.178R	51.0R+123	0.799R	14.3R+45
14'-0"	1.41R+1	5'-10"	4	1.41R+9'-6"	1.257R	54.7R+132	0.812R	14.5R+45

* Round number of bars to next highest whole number.
** For CS-27-45 or CS-27V-45, use 0.875xS to nearest inch.
** For CS-32-45 or CS-32V-45, use 0.815xS to nearest inch.

Footing quantities do not include deductions to piles.

CAST-IN-PLACE CONCRETE SLAB SPANS

PIERS ON PILES
45° SKEW

NOTES TO DESIGNER(cont'd):

TABLE OF DIMENSIONS AND QUANTITIES (Cont'd)								
H	2-SIDE SECTIONS							
	PV0401		PF0501		Neat		Footing	
	No.	Length	No.	Length	CY	LB	CY	LB
4'-0"	16	5'-0"	12	5'-0"	2.5	50	4.8	60
5'-0"	16	6'-0"	12	5'-1"	2.9	60	4.9	60
6'-0"	16	7'-0"	12	5'-2"	3.3	70	5.0	60
7'-0"	16	8'-0"	12	5'-3"	3.7	90	5.1	70
8'-0"	16	9'-0"	12	5'-4"	4.1	100	5.2	70
9'-0"	16	10'-0"	12	5'-5"	4.5	110	5.3	70
10'-0"	16	11'-0"	12	5'-6"	4.9	120	5.4	70
11'-0"	16	12'-0"	12	5'-7"	5.3	130	5.5	70
12'-0"	16	13'-0"	12	5'-8"	5.7	150	5.6	70
13'-0"	16	14'-0"	12	5'-9"	6.1	150	5.6	70
14'-0"	16	15'-0"	12	5'-10"	6.5	160	5.7	70

ADD THE FOLLOWING NOTES, DIMENSIONS, DETAILS, ETC. TO STANDARD:

PROJECT/TITLE BLOCKS:

Project block and title block shall be completed in accordance with Manual of the Structure and Bridge Division, Volume V – Part 2, Chapter 4.

DIMENSION DATA:

Enter H, L, R, W, s and w dimensions in the DIMENSION DATA table.

REINFORCING STEEL SCHEDULE:

Enter No. and Length of PH0401, PV0401, PF0501 and PF0502 bars into the table.

PILE PLAN:

Based on skew angle = 45° and H = 4'-0" to 14'-0", replace the pile plan cell with the appropriate pile plan cell if needed.

STATE	FEDERAL AID ROUTE	FEDERAL AID PROJECT	STATE ROUTE	STATE PROJECT	SHEET NO.
VA.	—				

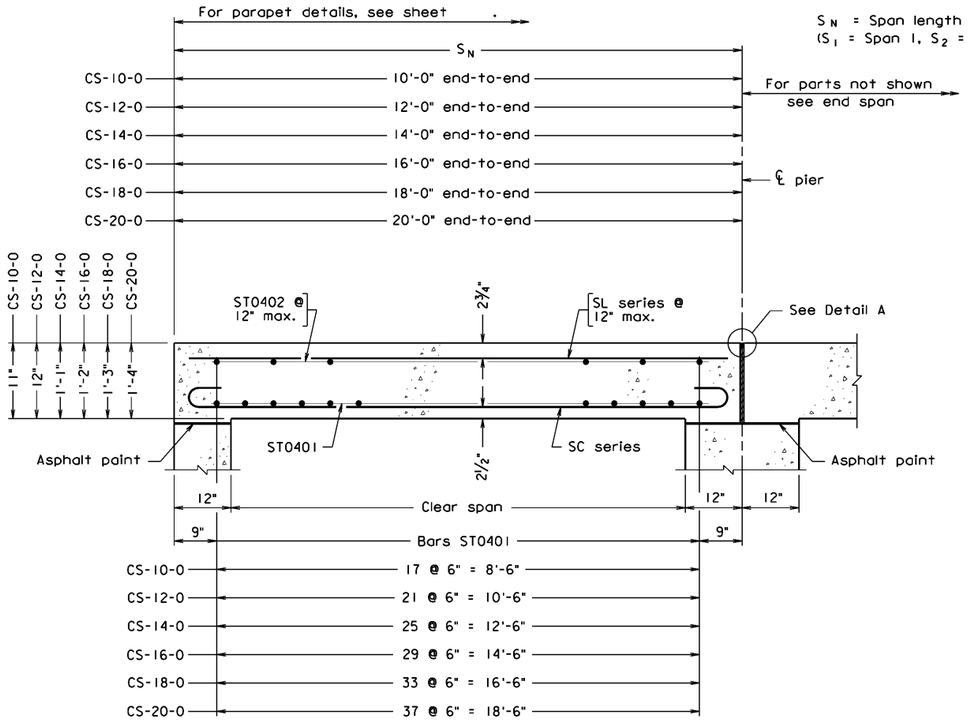

LONGITUDINAL SECTION

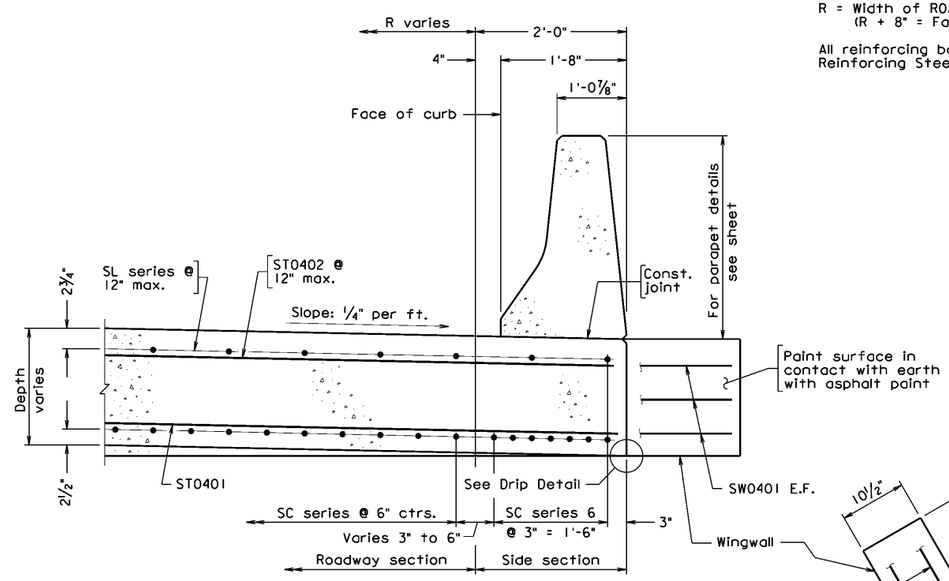

PART TRANSVERSE SECTION

Notes:

R = Width of ROADWAY SECTION
(R + 8" = Face-to-face of curb dimension)

All reinforcing bars in the superstructure shall be Corrosion Resistant Reinforcing Steel, Class ___.

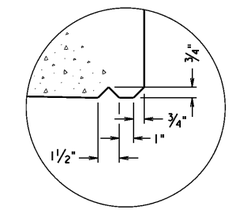

DRIP DETAIL

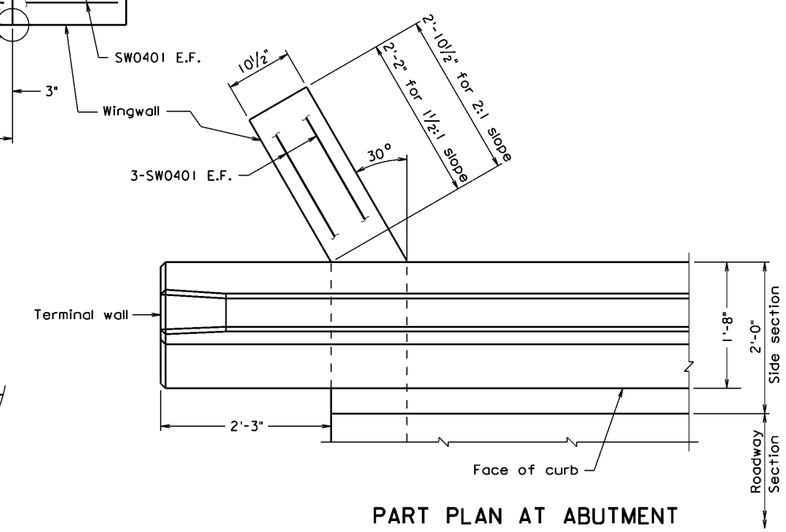

PART PLAN AT ABUTMENT

REINFORCING STEEL SCHEDULE

Span	4 WINGWALLS Mark	No.	Length 1½:1	Length 2:1	2 SIDE SECTIONS** Mark	No.	Length	Pin ø	ROADWAY SECTION Mark	No.*	Length	Pin ø	Mark	No.	Length	Mark	No.*	Length	Mark	No.	Length
CS-10-0	SW0401	24	3'-9"	4'-6"	SC0601	14	10'-11"	4½"	SC0601	2R	10'-11"	4½"	ST0401	18	R+3'-7"	SL0401	R+5	9'-6"	ST0402	10	R+3'-7"
CS-12-0	SW0401	24	3'-9"	4'-6"	SC0702	14	13'-1"	5¼"	SC0702	2R	13'-1"	5¼"	ST0401	22	R+3'-7"	SL0402	R+5	11'-6"	ST0402	12	R+3'-7"
CS-14-0	SW0401	24	3'-9"	4'-6"	SC0703	14	15'-1"	5¼"	SC0703	2R	15'-1"	5¼"	ST0401	26	R+3'-7"	SL0403	R+5	13'-6"	ST0402	14	R+3'-7"
CS-16-0	SW0401	24	3'-9"	4'-6"	SC0804	14	17'-4"	6"	SC0804	2R	17'-4"	6"	ST0401	30	R+3'-7"	SL0404	R+5	15'-6"	ST0402	16	R+3'-7"
CS-18-0	SW0401	24	3'-9"	4'-6"	SC0805	14	19'-4"	6"	SC0805	2R	19'-4"	6"	ST0401	34	R+3'-7"	SL0405	R+5	17'-6"	ST0402	18	R+3'-7"
CS-20-0	SW0401	24	3'-9"	4'-6"	SC0806	14	21'-4"	6"	SC0806	2R	21'-4"	6"	ST0401	38	R+3'-7"	SL0406	R+5	19'-6"	ST0402	20	R+3'-7"

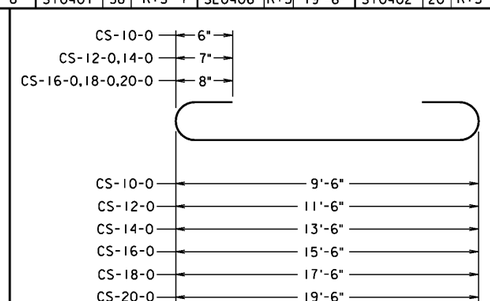

SC series

Notes:

Dimensions shown in bending diagram are out-to-out of bars.
*Round number of bars to next highest whole number.
**This does not include SL and ST Series shown in SIDE SECTION. These bars are tabulated in the ROADWAY SECTION.

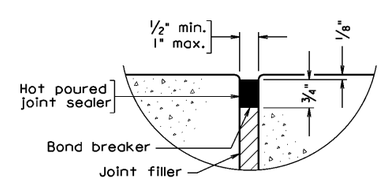

DETAIL A

Note: Joint sealer to extend full width of slab. For sealer in parapet, see Section C-C on sheet .

DIMENSION DATA
R =
S_1 =
S_2 =

Not to scale

©2013, Commonwealth of Virginia

No.	Description	Date

Revisions

COMMONWEALTH OF VIRGINIA
DEPARTMENT OF TRANSPORTATION

STRUCTURE AND BRIDGE DIVISION

CONCRETE SLAB DETAILS

Designed: .....
Drawn: .....
Checked: .....

Date	Plan No.	Sheet No.
	CS-10-20-0	

Sealed and Signed by:
Julius F.J. Volgyi Jr.
Lic. No. 010487
On the date of
January 25, 2013

A copy of the original sealed and signed standard drawing is on file in the Central Office.

VDOT S&B DIVISION
RICHMOND, VA
STRUCTURAL ENGINEER

CS-10-20-0 01-25-2013

cs10200.dgn

CAST-IN-PLACE CONCRETE SLAB SPANS

CONCRETE SLAB DETAILS
10'-20' SPANS – 0° SKEW

NOTES TO DESIGNER:

Standard to be used for the construction of standard cast-in-place concrete slab spans.

Standard is for: 0° skew
10', 12', 14', 16', 18' and 20' span length (end-to-end)

ESTIMATED QUANTITIES				
Span	**4 Wingwalls 1 ½ : 1**		**4 Wingwalls 2:1**	
	Cl. A4 Conc.	Reinf. Steel	Cl. A4 Conc.	Reinf. Steel
	CY	LB	CY	LB
CS-10-0	0.3	60	0.4	70
CS-12-0	0.3	60	0.4	70
CS-14-0	0.3	60	0.4	70
CS-16-0	0.4	60	0.5	70
CS-18-0	0.4	60	0.5	70
CS-20-0	0.4	60	0.5	70
Span	**2 Side Sections**		**Roadway Section**	
	Cl. A4 Conc.	Reinf. Steel	Cl. A4 Conc.	Reinf. Steel
	CY	LB	CY	LB
CS-10-0	1.3	230	0.33R	59(R+1)
CS-12-0	1.7	370	0.44R	85(R+1)
CS-14-0	2.2	430	0.56R	99(R+1)
CS-16-0	2.7	650	0.69R	135(R+1)
CS-18-0	3.3	720	0.83R	151(R+1)
CS-20-0	3.9	800	0.99R	167(R+1)

ADD THE FOLLOWING NOTES, DIMENSIONS, DETAILS, ETC. TO STANDARD:

PROJECT/TITLE BLOCKS:

Project block and title block shall be completed in accordance with Manual of the Structure and Bridge Division, Volume V – Part 2, Chapter 4.

DIMENSION DATA:

Enter R, S_1, S_2, etc. in the DIMENSION DATA table.

SLAB SPAN DETAILS:

Indicate appropriate slab depth based on span length for required slab span details.

CAST-IN-PLACE CONCRETE SLAB SPANS

CONCRETE SLAB DETAILS
10'-20' SPANS – 0° SKEW

ADD THE FOLLOWING NOTES, DIMENSIONS, DETAILS, ETC. TO STANDARD cont'd:

NOTES:

Complete second note by adding the Class I, II or III of corrosion resistant reinforcing steel required. For additional information on corrosion resistant reinforcing steels (CRR), see Structure and Bridge Division Memorandum (current IIM-S&B-81).

STATE	FEDERAL AID ROUTE	FEDERAL AID PROJECT	STATE ROUTE	STATE PROJECT	SHEET NO.
VA.	—				

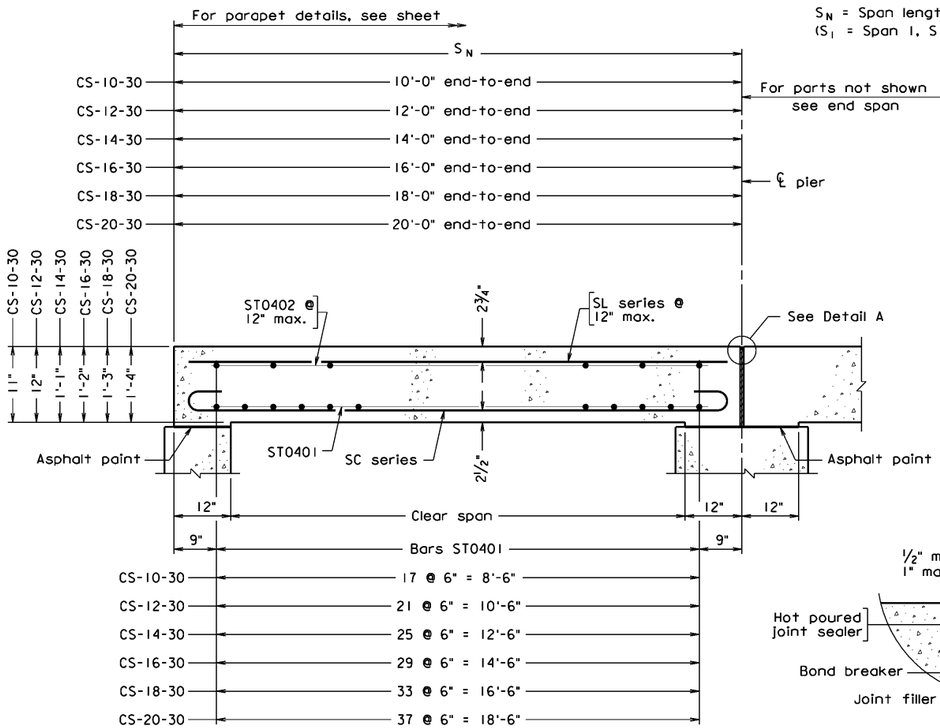

LONGITUDINAL SECTION

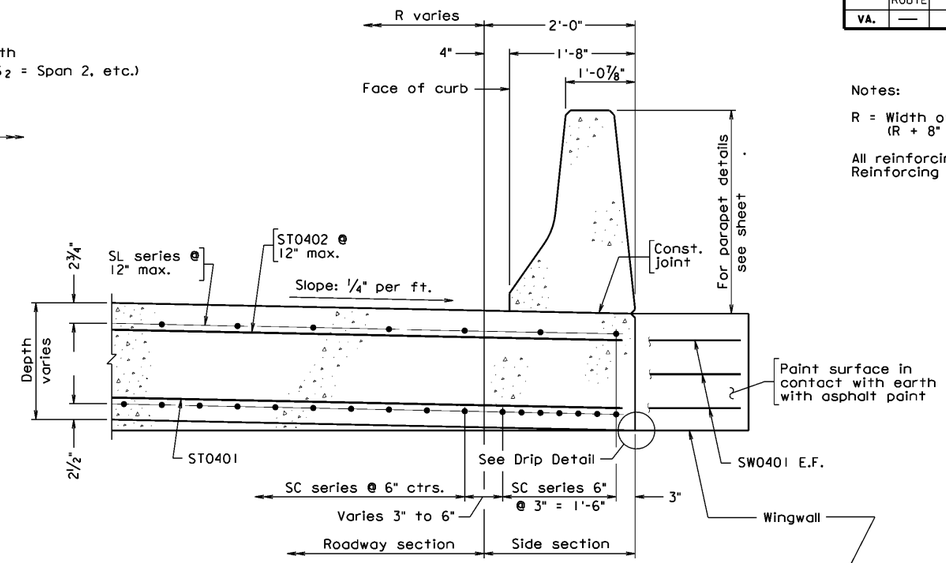

PART TRANSVERSE SECTION

Notes:

R = Width of ROADWAY SECTION.
(R + 8" = Face-to-face of curb dimension)

All reinforcing bars in superstructure shall be Corrosion Resistant Reinforcing Steel, Class __.

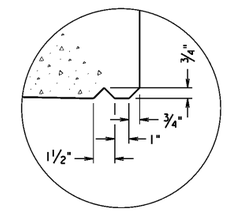

DRIP DETAIL

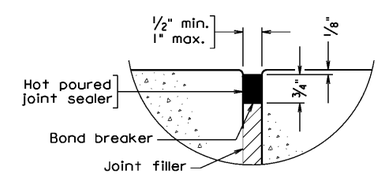

DETAIL A

Note: Joint sealer to extend full width of slab. For sealer in parapet, see Section C-C on sheet .

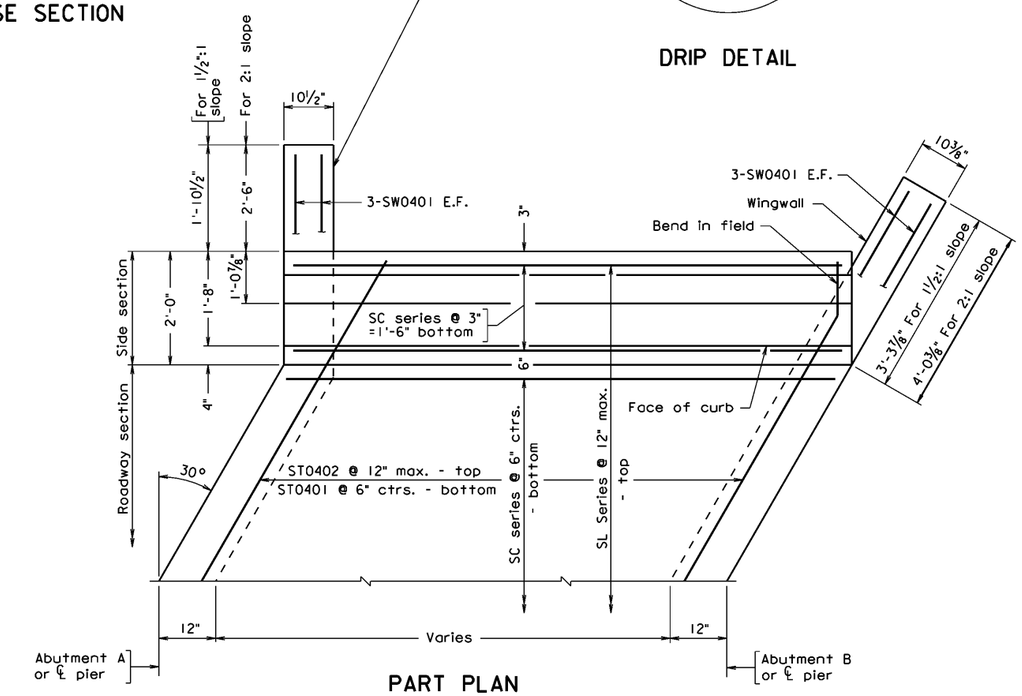

PART PLAN

DIMENSION DATA
R =
S_1 =
S_2 =

REINFORCING STEEL SCHEDULE

Span	4 WINGWALLS Mark	No.	Length 1½:1	Length 2:1	2 SIDE SECTIONS** Mark	No.	Length	Pin ø	ROADWAY SECTION Mark	No.*	Length	Pin ø	Mark	No.	Length	Mark	No.*	Length	Mark	No.	Length
CS-10-30	SW0401	24	4'-2"	4'-10"	SC0601	14	10'-11"	4½"	SC0601	2R	10'-11"	4½"	ST0401	18	1.16(R+3'-7")	SL0401	R+5	9'-6"	ST0402	10	1.16(R+3'-7")
CS-12-30	SW0401	24	4'-2"	4'-10"	SC0702	14	13'-1"	5¼"	SC0702	2R	13'-1"	5¼"	ST0401	22	1.16(R+3'-7")	SL0402	R+5	11'-6"	ST0402	12	1.16(R+3'-7")
CS-14-30	SW0401	24	4'-2"	4'-10"	SC0703	14	15'-1"	5¼"	SC0703	2R	15'-1"	5¼"	ST0401	26	1.16(R+3'-7")	SL0403	R+5	13'-6"	ST0402	14	1.16(R+3'-7")
CS-16-30	SW0401	24	4'-2"	4'-10"	SC0804	14	17'-4"	6"	SC0804	2R	17'-4"	6"	ST0401	30	1.16(R+3'-7")	SL0404	R+5	15'-6"	ST0402	16	1.16(R+3'-7")
CS-18-30	SW0401	24	4'-2"	4'-10"	SC0805	14	19'-4"	6"	SC0805	2R	19'-4"	6"	ST0401	34	1.16(R+3'-7")	SL0405	R+5	17'-6"	ST0402	18	1.16(R+3'-7")
CS-20-30	SW0401	24	4'-2"	4'-10"	SC0806	14	21'-4"	6"	SC0806	2R	21'-4"	6"	ST0401	38	1.16(R+3'-7")	SL0406	R+5	19'-6"	ST0402	20	1.16(R+3'-7")

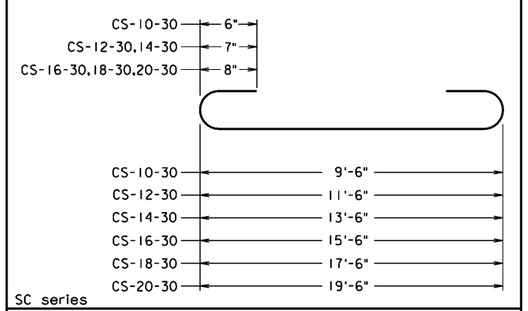

Notes:

Dimensions shown in bending diagram are out-to-out of bars.
* Round number of bars to next highest whole number.
** This does not include SL and ST Series shown in SIDE SECTION. These bars are tabulated in the ROADWAY SECTION.

cs102030.dgn

CS-10-20-30 01-25-2013

Sealed and Signed by:
Julius F.J. Volgyi Jr.
Lic. No. 010487
On the date of
January 25, 2013

A copy of the original sealed and signed standard drawing is on file in the Central Office.

VDOT S&B DIVISION
RICHMOND, VA
STRUCTURAL ENGINEER

Not to scale

©2013, Commonwealth of Virginia

No.	Description	Date
	Revisions	

COMMONWEALTH OF VIRGINIA
DEPARTMENT OF TRANSPORTATION

STRUCTURE AND BRIDGE DIVISION

CONCRETE SLAB DETAILS

Designed: .....
Drawn: .....
Checked: .....

Date	Plan No.	Sheet No.
	CS-10-20-30	

CAST-IN-PLACE CONCRETE SLAB SPANS

CONCRETE SLAB DETAILS
10'-20' SPANS – 30° SKEW

NOTES TO DESIGNER:

Standard to be used for the construction of standard cast-in-place concrete slab spans.

Standard is for: 30° skew
10', 12', 14', 16', 18' and 20' span length (end-to-end)

ESTIMATED QUANTITIES				
Span	**4 Wingwalls 1 ½ : 1**		**4 Wingwalls 2:1**	
	Cl. A4 Conc.	Reinf. Steel	Cl. A4 Conc.	Reinf. Steel
	CY	LB	CY	LB
CS-10-30	0.3	70	0.3	80
CS-12-30	0.3	70	0.4	80
CS-14-30	0.3	70	0.4	80
CS-16-30	0.3	70	0.4	80
CS-18-30	0.4	70	0.5	80
CS-20-30	0.4	70	0.5	80
Span	**2 Side Sections**		**Roadway Section**	
	Cl. A4 Conc.	Reinf. Steel	Cl. A4 Conc.	Reinf. Steel
	CY	LB	CY	LB
CS-10-30	1.3	230	0.33R	63(R+1)
CS-12-30	1.7	370	0.44R	89(R+1)
CS-14-30	2.2	430	0.56R	103(R+1)
CS-16-30	2.7	650	0.69R	140(R+1)
CS-18-30	3.3	720	0.83R	157(R+1)
CS-20-30	3.9	800	0.99R	174(R+1)

ADD THE FOLLOWING NOTES, DIMENSIONS, DETAILS, ETC. TO STANDARD:

PROJECT/TITLE BLOCKS:

Project block and title block shall be completed in accordance with Manual of the Structure and Bridge Division, Volume V – Part 2, Chapter 4.

DIMENSION DATA:

Enter R, S_1, S_2, etc. in the DIMENSION DATA table.

SLAB SPAN DETAILS:

Indicate appropriate slab depth based on span length for required slab span details.

CAST-IN-PLACE CONCRETE SLAB SPANS

CONCRETE SLAB DETAILS
10'-20' SPANS – 30° SKEW

ADD THE FOLLOWING NOTES, DIMENSIONS, DETAILS, ETC. TO STANDARD cont'd:

NOTES:

Complete second note by adding the Class I, II or III of corrosion resistant reinforcing steel required. For additional information on corrosion resistant reinforcing steels (CRR), see Structure and Bridge Division Memorandum (current IIM-S&B-81).

STATE	FEDERAL AID ROUTE	FEDERAL AID PROJECT	STATE ROUTE	STATE PROJECT	SHEET NO.
VA.	—				

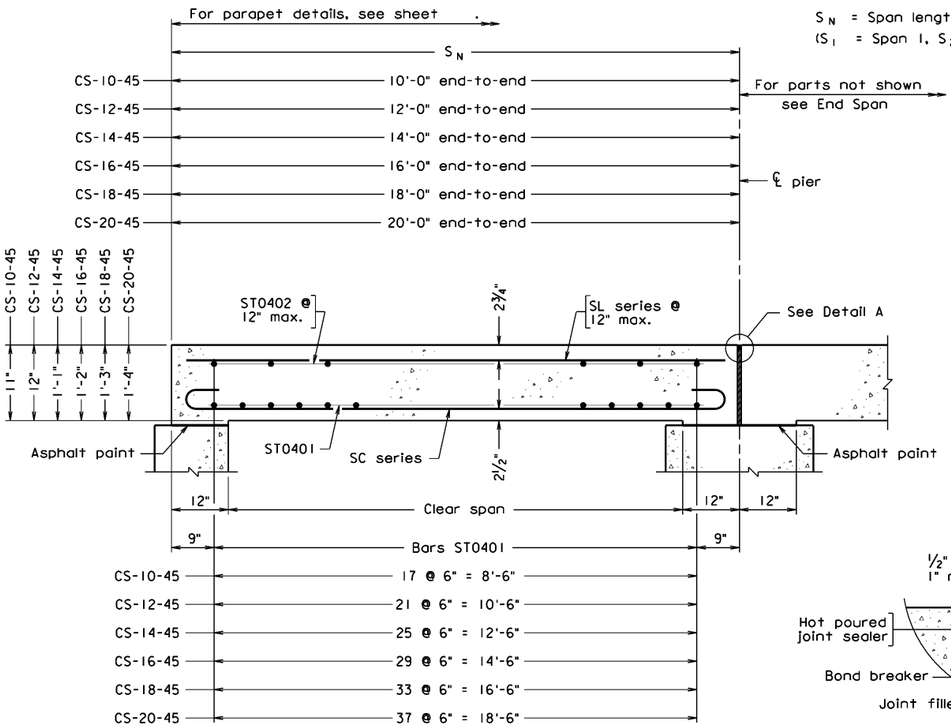

LONGITUDINAL SECTION

S_N = Span length
(S_1 = Span 1, S_2 = Span 2, etc.)

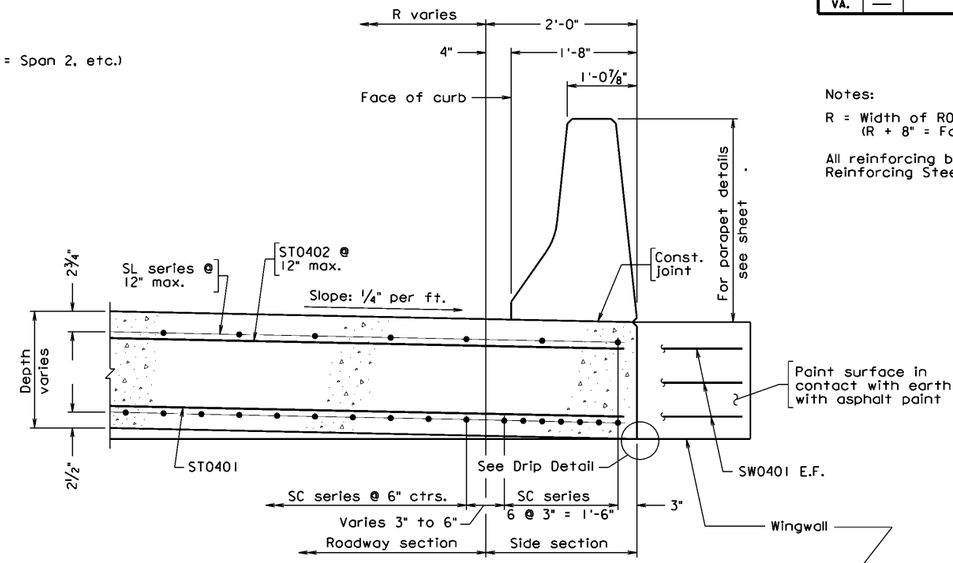

PART TRANSVERSE SECTION

Notes:

R = Width of ROADWAY SECTION.
(R + 8" = Face-to-face of curb dimension)

All reinforcing bars in superstructure shall be Corrosion Resistant Reinforcing Steel, Class __.

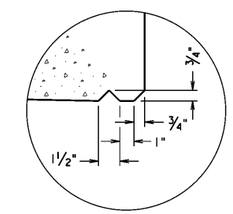

DRIP DETAIL

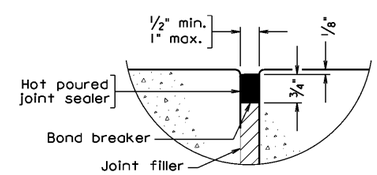

DETAIL A

Note: Joint sealer to extend full width of slab. For sealer in parapet, see Section C-C on sheet .

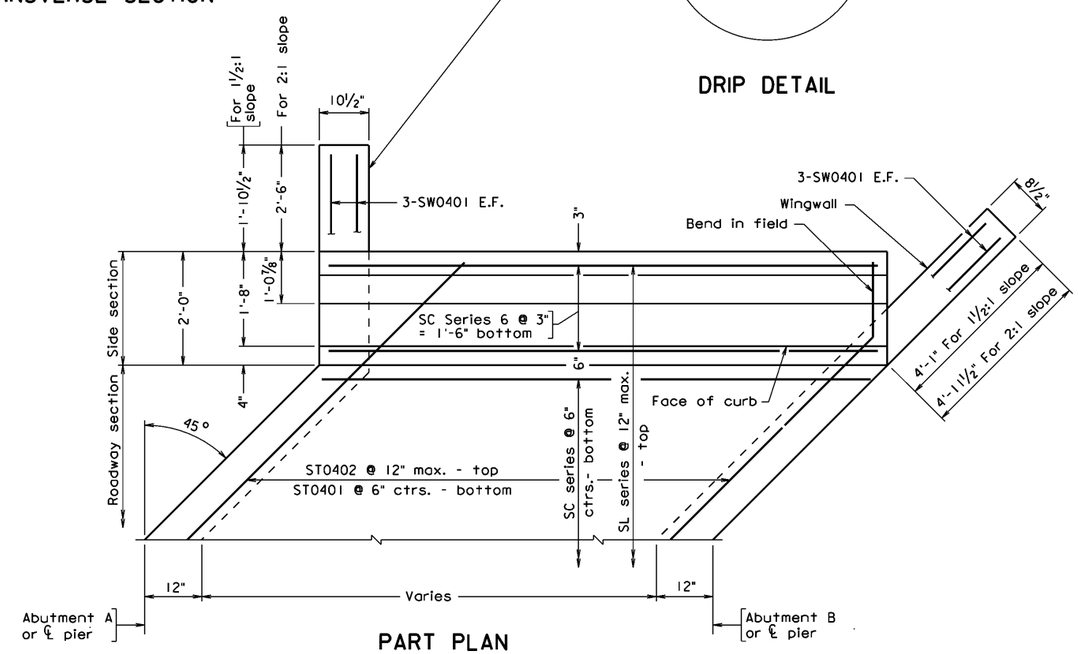

PART PLAN

REINFORCING STEEL SCHEDULE

Span	4 WINGWALLS Mark	No.	Length 1½:1	Length 2:1	2 SIDE SECTIONS** Mark	No.	Length	Pin ø	ROADWAY SECTION Mark	No.*	Length	Pin ø	Mark	No.	Length	Mark	No.*	Length	Mark	No.	Length
CS-10-45	SW0401	24	5'-0"	5'-10"	SC0601	14	10'-11"	4½"	SC0601	2R	10'-11"	4½"	ST0401	18	1.41(R+3'-7")	SL0401	R+5	9'-6"	ST0402	10	1.41(R+3'-7")
CS-12-45	SW0401	24	5'-0"	5'-10"	SC0702	14	13'-1"	5¼"	SC0702	2R	13'-1"	5¼"	ST0401	22	1.41(R+3'-7")	SL0402	R+5	11'-6"	ST0402	12	1.41(R+3'-7")
CS-14-45	SW0401	24	5'-0"	5'-10"	SC0703	14	15'-1"	5¼"	SC0703	2R	15'-1"	5¼"	ST0401	26	1.41(R+3'-7")	SL0403	R+5	13'-6"	ST0402	14	1.41(R+3'-7")
CS-16-45	SW0401	24	5'-0"	5'-10"	SC0804	14	17'-4"	6"	SC0804	2R	17'-4"	6"	ST0401	30	1.41(R+3'-7")	SL0404	R+5	15'-6"	ST0402	16	1.41(R+3'-7")
CS-18-45	SW0401	24	5'-0"	5'-10"	SC0805	14	19'-4"	6"	SC0805	2R	19'-4"	6"	ST0401	34	1.41(R+3'-7")	SL0405	R+5	17'-6"	ST0402	18	1.41(R+3'-7")
CS-20-45	SW0401	24	5'-0"	5'-10"	SC0806	14	21'-4"	6"	SC0806	2R	21'-4"	6"	ST0401	38	1.41(R+3'-7")	SL0406	R+5	19'-6"	ST0402	20	1.41(R+3'-7")

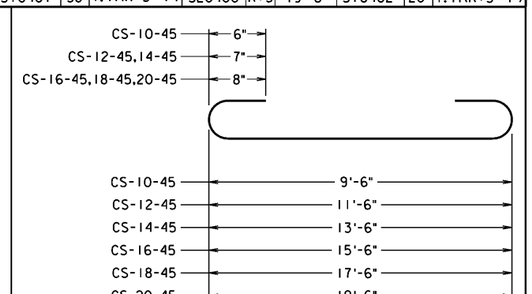

Notes:

Dimensions shown in bending diagram are out-to-out of bars.
*Round number of bars to next highest whole number.
**This does not include SL and ST Series shown in SIDE SECTION. These bars are tabulated in the ROADWAY SECTION.

DIMENSION DATA
R =
S_1 =
S_2 =

Not to scale

©2013, Commonwealth of Virginia

No.	Description	Date

Revisions

COMMONWEALTH OF VIRGINIA
DEPARTMENT OF TRANSPORTATION

STRUCTURE AND BRIDGE DIVISION

CONCRETE SLAB DETAILS

Designed: .....
Drawn: .....
Checked: .....

Date	Plan No.	Sheet No.
	CS-10-20-45	

Sealed and Signed by:
Julius F.J. Volgyi Jr.
Lic. No. 010487
On the date of
January 25, 2013

A copy of the original sealed and signed standard drawing is on file in the Central Office.

VDOT S&B DIVISION
RICHMOND, VA
STRUCTURAL ENGINEER

CS-10-20-45 01-25-2013

cs102045.dgn

CAST-IN-PLACE CONCRETE SLAB SPANS

CONCRETE SLAB DETAILS
10'-20' SPANS – 45° SKEW

NOTES TO DESIGNER:

Standard to be used for the construction of standard cast-in-place concrete slab spans.

Standard is for: 45° skew
10', 12', 14', 16', 18' and 20' span length (end-to-end)

ESTIMATED QUANTITIES				
Span	**4 Wingwalls 1 ½ : 1**		**4 Wingwalls 2:1**	
	Cl. A4 Conc.	Reinf. Steel	Cl. A4 Conc.	Reinf. Steel
	CY	LB	CY	LB
CS-10-45	0.3	80	0.4	90
CS-12-45	0.3	80	0.4	90
CS-14-45	0.3	80	0.4	90
CS-16-45	0.4	80	0.5	90
CS-18-45	0.4	80	0.5	90
CS-20-45	0.4	80	0.5	90
Span	**2 Side Sections**		**Roadway Section**	
	Cl. A4 Conc.	Reinf. Steel	Cl. A4 Conc.	Reinf. Steel
	CY	LB	CY	LB
CS-10-45	1.3	230	0.33R	67(R+1)
CS-12-45	1.7	370	0.44R	95(R+1)
CS-14-45	2.2	430	0.56R	111(R+1)
CS-16-45	2.7	650	0.69R	148(R+1)
CS-18-45	3.3	720	0.83R	166(R+1)
CS-20-45	3.9	800	0.99R	184(R+1)

ADD THE FOLLOWING NOTES, DIMENSIONS, DETAILS, ETC. TO STANDARD:

PROJECT/TITLE BLOCKS:

Project block and title block shall be completed in accordance with Manual of the Structure and Bridge Division, Volume V – Part 2, Chapter 4.

DIMENSION DATA:

Enter R, S_1, S_2, etc. in the DIMENSION DATA table.

SLAB SPAN DETAILS:

Indicate appropriate slab depth based on span length for required slab span details.

CAST-IN-PLACE CONCRETE SLAB SPANS

CONCRETE SLAB DETAILS
10'-20' SPANS – 45° SKEW

ADD THE FOLLOWING NOTES, DIMENSIONS, DETAILS, ETC. TO STANDARD cont'd:

NOTES:

Complete second note by adding the Class I, II or III of corrosion resistant reinforcing steel required. For additional information on corrosion resistant reinforcing steels (CRR), see Structure and Bridge Division Memorandum (current IIM-S&B-81).

STATE	FEDERAL AID ROUTE	FEDERAL AID PROJECT	STATE ROUTE	STATE PROJECT	SHEET NO.
VA.	—				

S_N = Span length
(S_1 = Span 1, S_2 = Span 2, etc.)

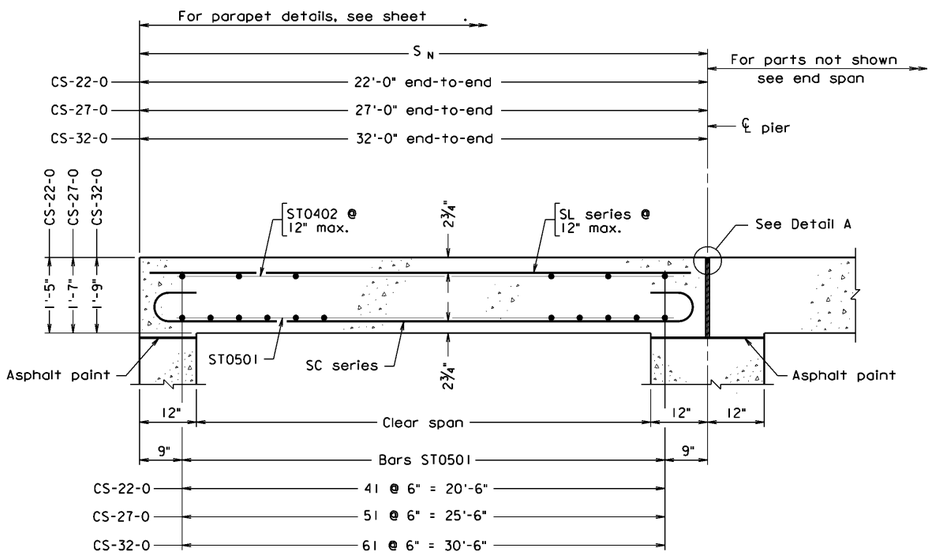

LONGITUDINAL SECTION

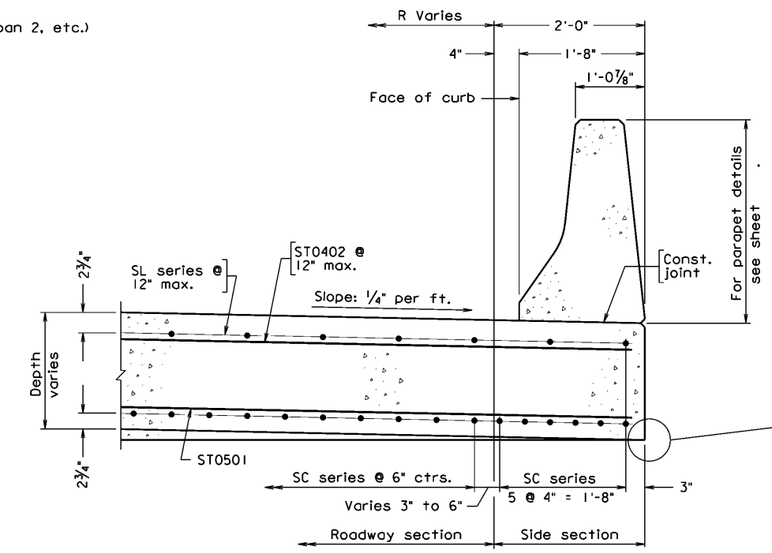

PART TRANSVERSE SECTION

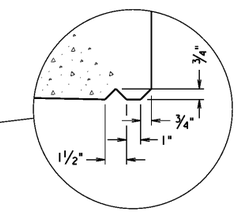

DRIP DETAIL

Notes:

R = Width of ROADWAY SECTION.
(R + 8" = Face-to-face of curb dimension)

All reinforcing bars in superstructure shall be Corrosion Resistant Reinforcing Steel, Class __.

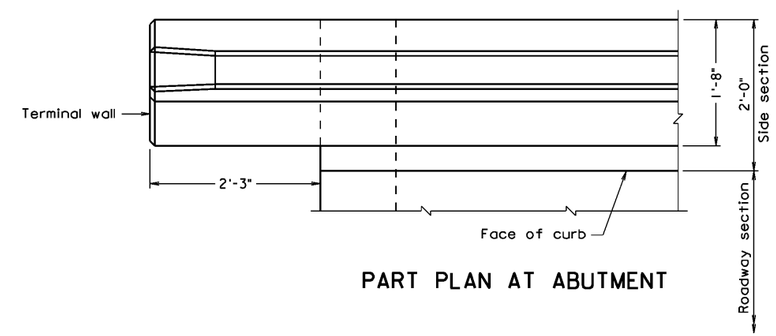

PART PLAN AT ABUTMENT

REINFORCING STEEL SCHEDULE

Span	2 SIDE SECTIONS**				ROADWAY SECTION												
	Mark	No.	Length	Pin ø	Mark	No.*	Length	Pin ø	Mark	No.*	Length	Mark	No.	Length	Mark	No.	Length
CS-22-0	SC0901	12	24'-0"	9"	SC0901	2R	24'-0"	9"	SL0401	R+5	21'-6"	ST0501	42	R+3'-7"	ST0402	22	R+3'-7"
CS-27-0	SC1002	12	29'-3"	10"	SC1002	2R	29'-3"	10"	SL0402	R+5	26'-6"	ST0501	52	R+3'-7"	ST0402	27	R+3'-7"
CS-32-0	SC1103	12	34'-7"	11"	SC1103	2R	34'-7"	11"	SL0403	R+5	31'-6"	ST0501	62	R+3'-7"	ST0402	32	R+3'-7"

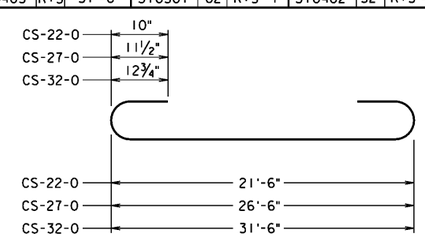

SC series

Notes:

Dimensions shown in bending diagram are out-to-out of bars.

*Round number of bars to next highest whole number.

**This does not include SL and ST Series shown in SIDE SECTION. These bars are tabulated in the ROADWAY SECTION.

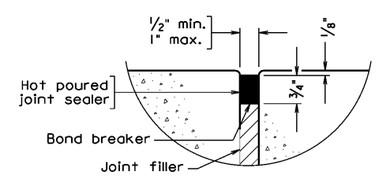

DETAIL A

Note: Joint sealer to extend full width of slab. For sealer in parapet, see Section C-C on sheet .

DIMENSION DATA
R =
S_1 =
S_2 =

Not to scale

©2013, Commonwealth of Virginia

No.	Description	Date
	Revisions	

COMMONWEALTH OF VIRGINIA
DEPARTMENT OF TRANSPORTATION

STRUCTURE AND BRIDGE DIVISION

CONCRETE SLAB DETAILS

Designed: .....
Drawn: .....
Checked: .....

Date	Plan No.	Sheet No.
	CS-22-32-0	

Sealed and Signed by:
Julius F.J. Volgyi Jr.
Lic. No. 010487
On the date of
January 25, 2013

A copy of the original sealed and signed standard drawing is on file in the Central Office.

VDOT S&B DIVISION
RICHMOND, VA
STRUCTURAL ENGINEER

CS-22-32-0 01-25-2013

cs22320.dgn

CAST-IN-PLACE CONCRETE SLAB SPANS

CONCRETE SLAB DETAILS
22'- 32' SPANS – 0° SKEW

NOTES TO DESIGNER:

Standard to be used for the construction of standard cast-in-place concrete slab spans.

Standard is for: 0° skew
22', 27' and 32' span length (end-to-end)

ESTIMATED QUANTITIES				
Span	2 Side Sections		Roadway Section	
	Cl. A4 Conc.	Reinf. Steel	Cl. A4 Conc.	Reinf. Steel
	CY	LB	CY	LB
CS-22-0	4.6	980	1.15R	238(R+1)
CS-27-0	6.3	1510	1.58R	342(R+1)
CS-32-0	8.3	2200	2.07R	473(R+1)

ADD THE FOLLOWING NOTES, DIMENSIONS, DETAILS, ETC. TO STANDARD:

PROJECT/TITLE BLOCKS:

Project block and title block shall be completed in accordance with Manual of the Structure and Bridge Division, Volume V – Part 2, Chapter 4.

DIMENSION DATA:

Enter R, S_1, S_2, etc. in the DIMENSION DATA table.

SLAB SPAN DETAILS:

Indicate appropriate slab depth based on span length for required slab span details.

NOTES:

Complete second note by adding the Class I, II or III of corrosion resistant reinforcing steel required. For additional information on corrosion resistant reinforcing steels (CRR), see Structure and Bridge Division Memorandum (current IIM-S&B-81).

STATE	FEDERAL AID ROUTE	FEDERAL AID PROJECT	STATE ROUTE	STATE PROJECT	SHEET NO.
VA.	—				

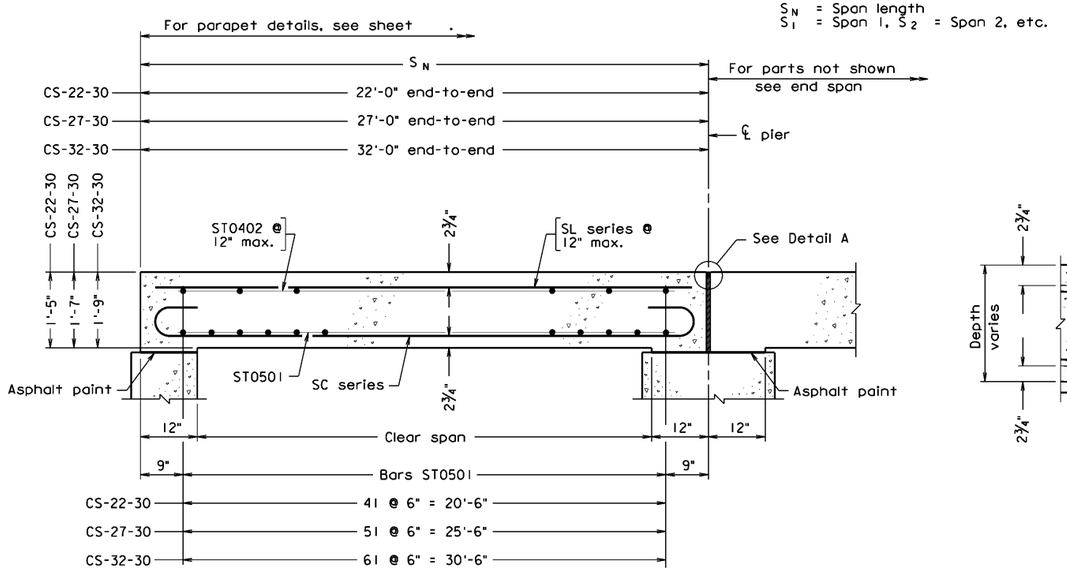

LONGITUDINAL SECTION

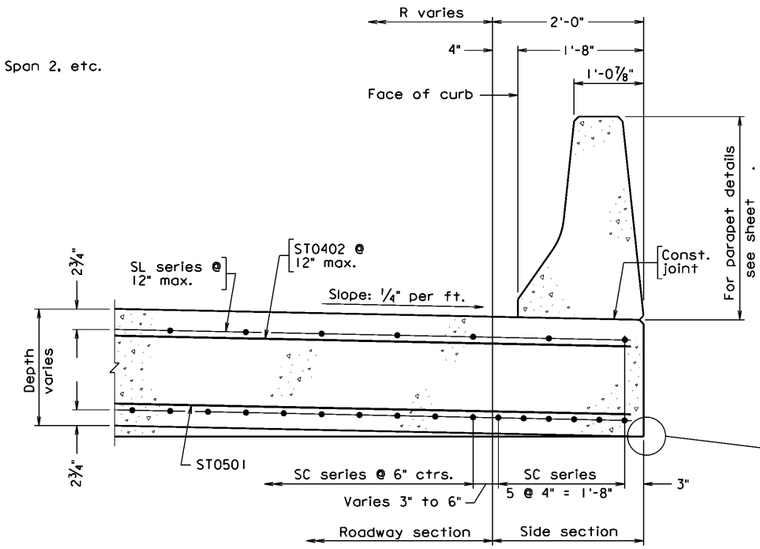

PART TRANSVERSE SECTION

Notes:

R = Width of ROADWAY SECTION.
(R + 8" = Face-to-face of curb dimension)

All reinforcing bars in superstructure shall be Corrosion Resistant Reinforcing Steel, Class ___.

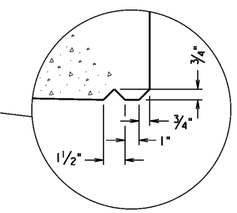

DRIP DETAIL

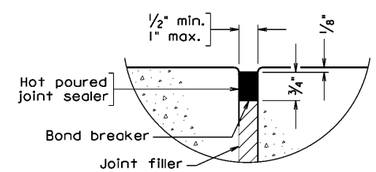

DETAIL A

Note: Joint sealer to extend full width of slab. For sealer in parapet, see Section C-C on sheet .

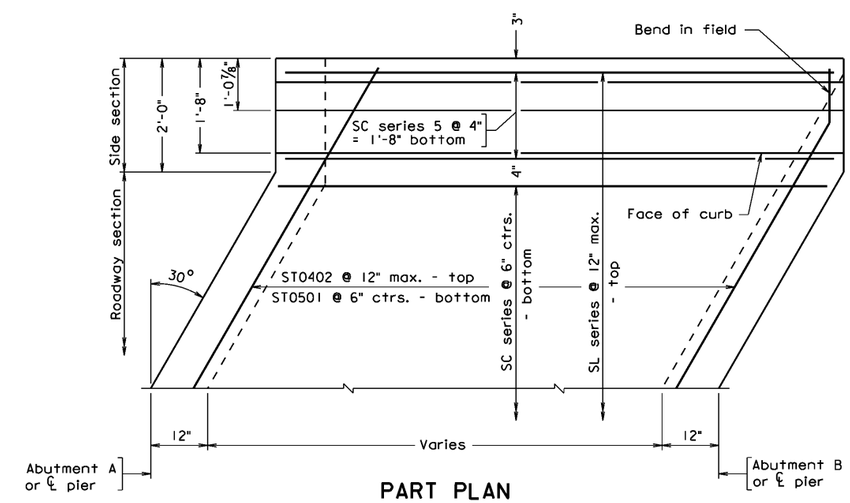

PART PLAN

REINFORCING STEEL SCHEDULE

Span	2 SIDE SECTIONS**				ROADWAY SECTION												
	Mark	No.	Length	Pin ø	Mark	No.*	Length	Pin ø	Mark	No.*	Length	Mark	No.	Length	Mark	No.	Length
CS-22-30	SC0901	12	24'-0"	9"	SC0901	2R	24'-0"	9"	SL0401	R+5	21'-6"	ST0501	42	1.16(R+3'-7")	ST0402	22	1.16(R+3'-7")
CS-27-30	SC1002	12	29'-3"	10"	SC1002	2R	29'-3"	10"	SL0402	R+5	26'-6"	ST0501	52	1.16(R+3'-7")	ST0402	27	1.16(R+3'-7")
CS-32-30	SC1103	12	34'-7"	11"	SC1103	2R	34'-7"	11"	SL0403	R+5	31'-6"	ST0501	62	1.16(R+3'-7")	ST0402	32	1.16(R+3'-7")

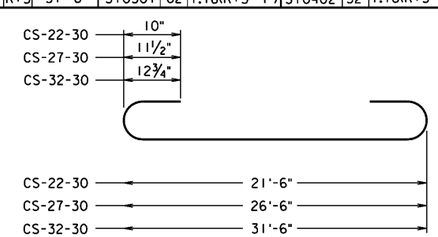

SC series

Notes:

Dimensions shown in bending diagram are out-to-out of bars.

*Round number of bars to next highest whole number.

**This does not include SL and ST Series shown in SIDE SECTION. These bars are tabulated in the ROADWAY SECTION.

DIMENSION DATA
R =
S_1 =
S_2 =

Not to scale

©2013, Commonwealth of Virginia

cs223230.dgn

01-25-2013

CS-22-32-30

Sealed and Signed by:
Julius F.J. Volgyi Jr.
Lic. No. 010487
On the date of
January 25, 2013

A copy of the original sealed and signed standard drawing is on file in the Central Office.

VDOT S&B DIVISION
RICHMOND, VA
STRUCTURAL ENGINEER

No.	Description	Date
	Revisions	

COMMONWEALTH OF VIRGINIA
DEPARTMENT OF TRANSPORTATION

STRUCTURE AND BRIDGE DIVISION

CONCRETE SLAB DETAILS

Designed: .....
Drawn: .....
Checked: .....

Date	Plan No.	Sheet No.
	CS-22-32-30	

CAST-IN-PLACE CONCRETE SLAB SPANS

CONCRETE SLAB DETAILS
22'- 32' SPANS – 30° SKEW

NOTES TO DESIGNER:

Standard to be used for the construction of standard cast-in-place concrete slab spans.

Standard is for: 30° skew
22', 27' and 32' span length (end-to-end)

ESTIMATED QUANTITIES				
Span	2 Side Sections		Roadway Section	
	Cl. A4 Conc.	Reinf. Steel	Cl. A4 Conc.	Reinf. Steel
	CY	LB	CY	LB
CS-22-30	4.6	980	1.15R	248(R+1)
CS-27-30	6.3	1510	1.58R	354(R+1)
CS-32-30	8.3	2200	2.07R	488(R+1)

ADD THE FOLLOWING NOTES, DIMENSIONS, DETAILS, ETC. TO STANDARD:

PROJECT/TITLE BLOCKS:

Project block and title block shall be completed in accordance with Manual of the Structure and Bridge Division, Volume V – Part 2, Chapter 4.

DIMENSION DATA:

Enter R, S_1, S_2, etc. in the DIMENSION DATA table.

SLAB SPAN DETAILS:

Indicate appropriate slab depth based on span length for required slab span details.

NOTES:

Complete second note by adding the Class I, II or III of corrosion resistant reinforcing steel required. For additional information on corrosion resistant reinforcing steels (CRR), see Structure and Bridge Division Memorandum (current IIM-S&B-81).

STATE	FEDERAL AID ROUTE	FEDERAL AID PROJECT	STATE ROUTE	STATE PROJECT	SHEET NO.
VA.	—				

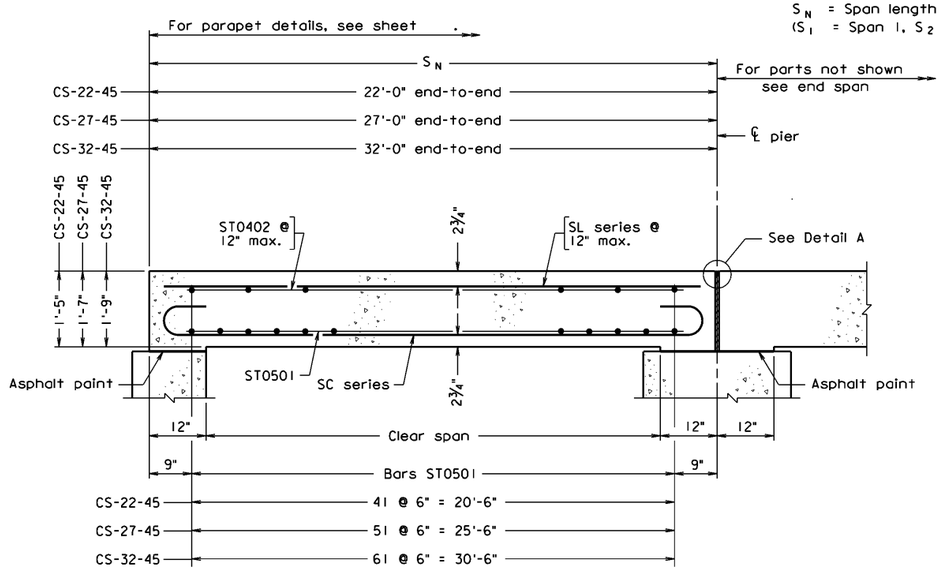

LONGITUDINAL SECTION

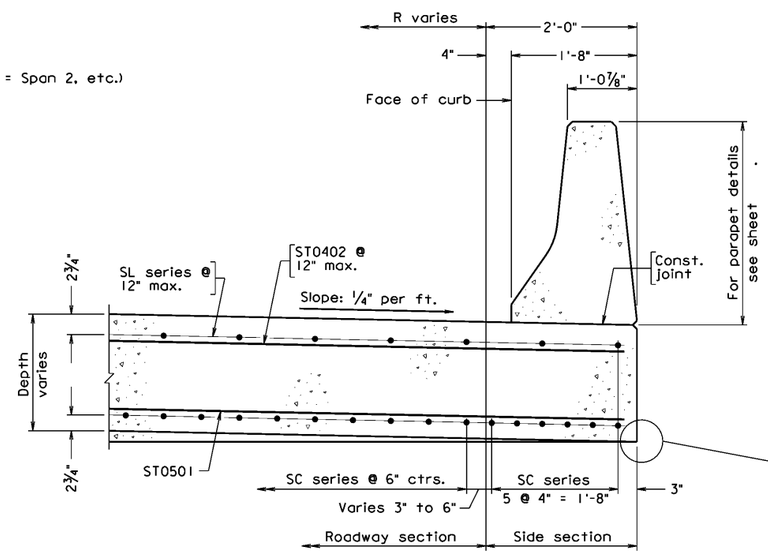

PART TRANSVERSE SECTION

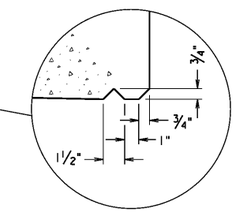

DRIP DETAIL

Notes:

R = Width of ROADWAY SECTION.
(R + 8" = Face-to-face of curb dimension)

All reinforcing bars in superstructure shall be Corrosion Resistant Reinforcing Steel, Class __.

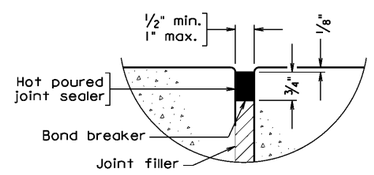

DETAIL A

Note: Joint sealer to extend full width of slab. For sealer in parapet, see Section C-C on sheet .

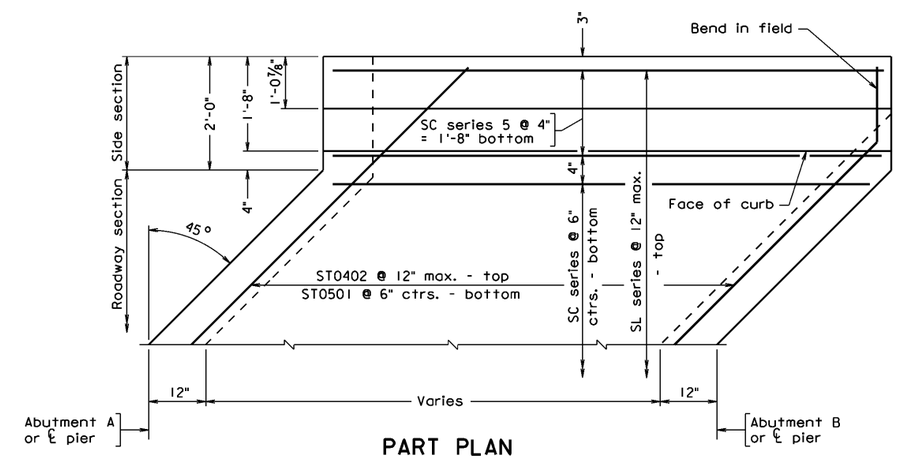

PART PLAN

DIMENSION DATA
R =
S_1 =
S_2 =

REINFORCING STEEL SCHEDULE

Span	2 SIDE SECTIONS**				ROADWAY SECTION												
	Mark	No.	Length	Pin ϕ	Mark	No.*	Length	Pin ϕ	Mark	No.*	Length	Mark	No.	Length	Mark	No.	Length
CS-22-45	SC0901	12	24'-0"	9"	SC0901	2R	24'-0"	9"	SL0401	R+5	21'-6"	ST0501	42	1.41(R+3'-7")	ST0402	22	1.41(R+3'-7")
CS-27-45	SC1002	12	29'-3"	10"	SC1002	2R	29'-3"	10"	SL0402	R+5	26'-6"	ST0501	52	1.41(R+3'-7")	ST0402	27	1.41(R+3'-7")
CS-32-45	SC1103	12	34'-7"	11"	SC1103	2R	34'-7"	11"	SL0403	R+5	31'-6"	ST0501	62	1.41(R+3'-7")	ST0402	32	1.41(R+3'-7")

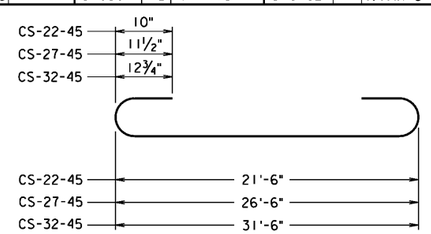

SC Series

Notes:

Dimensions shown in bending diagram are out-to-out of bars.

*Round number of bars to next highest whole number.

**This does not include SL and ST Series shown in SIDE SECTION. These bars are tabulated in the ROADWAY SECTION.

cs223245.dgn

CS-22-32-45 01-25-2013

Sealed and Signed by:
Julius F.J. Volgyi Jr.
Lic. No. 010487
On the date of
January 25, 2013

A copy of the original sealed and signed standard drawing is on file in the Central Office.

VDOT S&B DIVISION
RICHMOND, VA
STRUCTURAL ENGINEER

Not to scale

©2013, Commonwealth of Virginia

No.	Description	Date

Revisions

COMMONWEALTH OF VIRGINIA
DEPARTMENT OF TRANSPORTATION

STRUCTURE AND BRIDGE DIVISION

CONCRETE SLAB DETAILS

Designed:	Date	Plan No.	Sheet No.
Drawn:		CS-22-32-45	
Checked:			

CAST-IN-PLACE CONCRETE SLAB SPANS

CONCRETE SLAB DETAILS
22'- 32' SPANS – 45° SKEW

NOTES TO DESIGNER:

Standard to be used for the construction of standard cast-in-place concrete slab spans.

Standard is for: 45° skew
22', 27' and 32' span length (end-to-end)

ESTIMATED QUANTITIES				
Span	2 Side Sections		Roadway Section	
	Cl. A4 Conc.	Reinf. Steel	Cl. A4 Conc.	Reinf. Steel
	CY	LB	CY	LB
CS-22-45	4.6	980	1.15R	263(R+1)
CS-27-45	6.3	1510	1.58R	374(R+1)
CS-32-45	8.3	2200	2.07R	511(R+1)

ADD THE FOLLOWING NOTES, DIMENSIONS, DETAILS, ETC. TO STANDARD:

PROJECT/TITLE BLOCKS:

Project block and title block shall be completed in accordance with Manual of the Structure and Bridge Division, Volume V – Part 2, Chapter 4.

DIMENSION DATA:

Enter R, S_1, S_2, etc. in the DIMENSION DATA table.

SLAB SPAN DETAILS:

Indicate appropriate slab depth based on span length for required slab span details.

NOTES:

Complete second note by adding the Class I, II or III of corrosion resistant reinforcing steel required. For additional information on corrosion resistant reinforcing steels (CRR), see Structure and Bridge Division Memorandum (current IIM-S&B-81).

STATE	FEDERAL AID ROUTE	FEDERAL AID PROJECT	STATE ROUTE	STATE PROJECT	SHEET NO.
VA.	—				

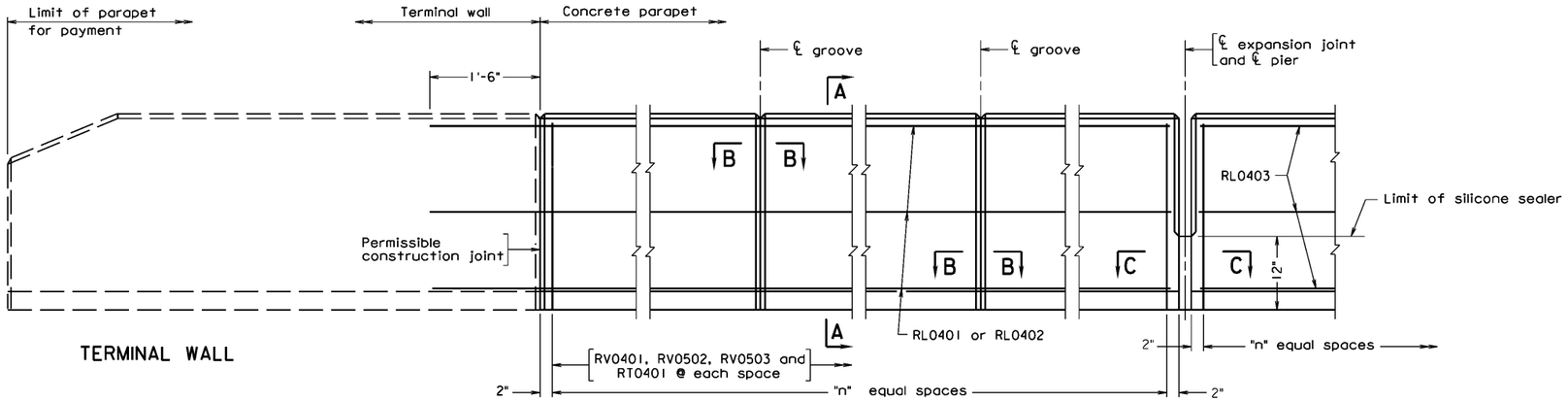

ELEVATION

"n" = Number of spaces for RV0401, RV0502, RV0503 and RT0401 bars

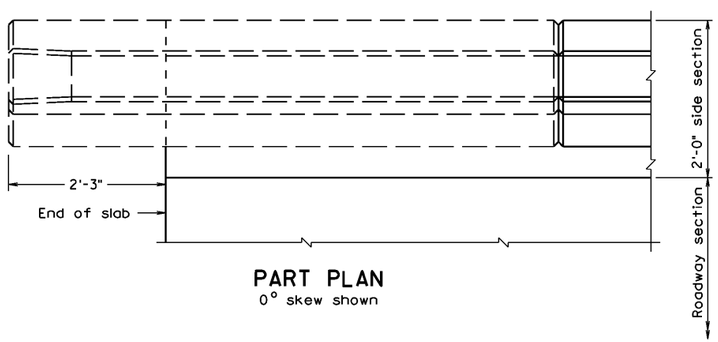

PART PLAN
0° skew shown

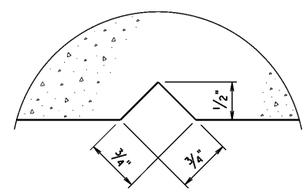

SECTION B-B
Groove detail for both sides of parapet

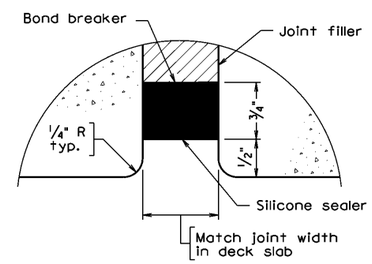

SECTION C-C

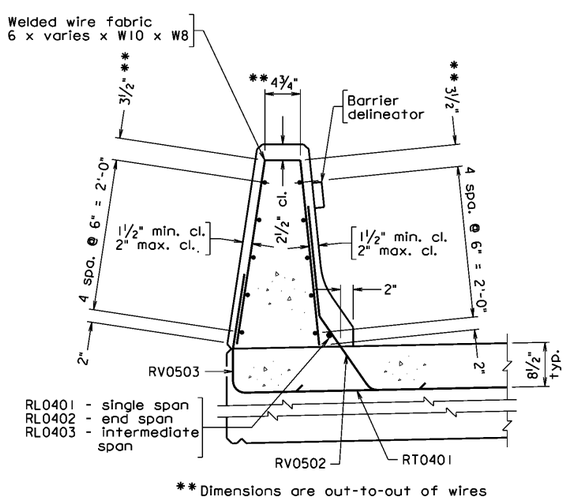

** Dimensions are out-to-out of wires

SECTION A-A
ALTERNATE REINFORCING STEEL

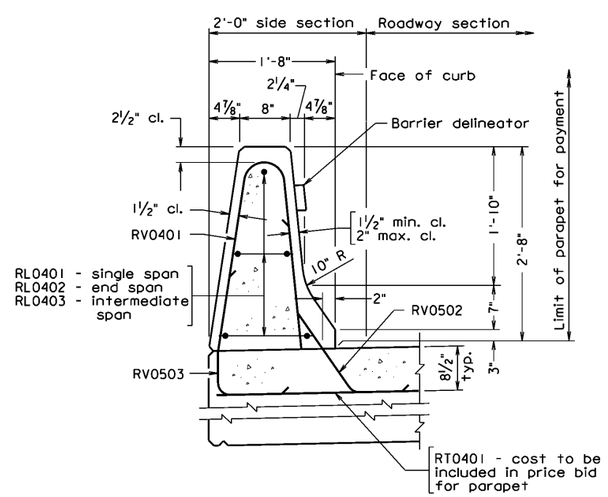

SECTION A-A

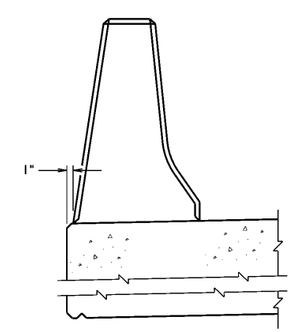

SECTION THRU JOINTS FOR EXTRUSION ONLY

Notes:

All reinforcing bars shall be Corrosion Resistant Reinforcing Steel, Class __.

All bevels for concrete on this sheet shall be 3/4". Rounded edges with 1" radius may be used in lieu of bevels along top of parapet.

All concrete shall be Class A4.

The Contractor shall determine all dimensions and details necessary for installation.

Barrier delineator size, color and spacing to be in accordance with the Specifications. Cost of barrier delineator to be included in the price bid for concrete parapet. Reflective surface of barrier delineator, in all instances, to be facing oncoming traffic.

For extruded parapets: During extrusion, open joints at abutments and piers shall be formed by the use of lubricated plates or other means so that uniformity of the opening and chamfers is maintained. Dimension of 1" (as shown in Section thru joints for Extrusion Only) is additional deck slab that shall be cast at Contractor's expense. Dimension(s) to face of curb shall not be reduced.

For details of terminal walls, see sheet __.

For groove location, see sheet __.

REINFORCING STEEL SCHEDULE

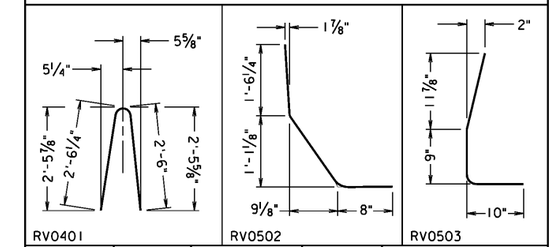

Mark	Size	Length	Pin ø	Location
RV0401	#4	5'-2"	4 1/2"	Parapet
RV0502	#5	3'-5 5/8"	3 3/4"	Parapet
RV0503	#5	2'-6"	3 3/4"	Parapet
RL0401	#4		—	Parapet
RL0402	#4		—	Parapet
RL0403	#4		—	Parapet
RT0401	#4	3'-0"	—	Slab

Note: Dimensions in bending diagram are out-to-out of bars, except as shown.

Gross concrete quantities (C.Y.) = Lin. Ft. x 0.105
All concrete above roadway slab.

csp1.dgn

01-25-2013

CS-P1

Sealed and Signed by:
Julius F.J. Volgyi Jr.
Lic. No. 010487
On the date of
January 25, 2013

A copy of the original sealed and signed standard drawing is on file in the Central Office.

VDOT S&B DIVISION
RICHMOND, VA
STRUCTURAL ENGINEER

Not to scale

©2013, Commonwealth of Virginia

No.	Description	Date
	Revisions	

COMMONWEALTH OF VIRGINIA
DEPARTMENT OF TRANSPORTATION

STRUCTURE AND BRIDGE DIVISION

CAST-IN-PLACE CONCRETE PARAPET (F-SHAPE)

Designed:	Date	Plan No.	Sheet No.
Drawn:		CS-P1	
Checked:			

CAST-IN-PLACE CONCRETE PARAPET (F-SHAPE)

NOTES TO DESIGNER:

Standard to be used when cast-in-place concrete parapet (F-Shape) is required. The F-shape parapet has a height of 2'-8" and has been crash tested for TL-4 (TL = test level). It is to be used as the normal traffic barrier unless an open rail is required. This standard is to be used in conjunction with CS-P2 and CS-P3.

It is the Contractor's responsibility to determine the number of reinforcing bars required as well as any other details required for installation. Therefore, the remainder of the Reinforcing Steel Schedule, including number of bars required, is to be left blank by the designer.

ADD THE FOLLOWING NOTES, DIMENSIONS, DETAILS, ETC. TO STANDARD:

PROJECT/TITLE BLOCKS:

Project block and title block shall be completed in accordance with Manual of the Structure and Bridge Division, Volume V – Part 2, Chapter 4.

REINFORCING STEEL SCHEDULE:

Modify bars if needed due to slab depth or cross slope used on bridge.

NOTES:

Complete fourth note by adding the Class I, II or III of corrosion resistant reinforcing steel required. For additional information on corrosion resistant reinforcing steels (CRR), see Structure and Bridge Division Memorandum (current IIM-S&B-81).

STATE	FEDERAL AID ROUTE	FEDERAL AID PROJECT	STATE ROUTE	STATE PROJECT	SHEET NO.
VA.	—				

SUPPLEMENTARY BAR LIST AND GROOVE SPACING

Span	SINGLE SPAN						END SPAN						INTERMEDIATE SPAN						SINGLE SPAN		END SPAN		INTERMEDIATE SPAN	
	Groove Spacing	"n"	Number of Bars				Groove Spacing	"n"	Number of Bars				Groove Spacing	"n"	Number of Bars				No. of Bars	Length	No. of Bars	Length	No. of Bars	Length
	S_1		RV0401	RV0502	RV0503	RT0401	S_1		RV0401	RV0502	RV0503	RT0401	S_2		RV0401	RV0502	RV0503	RT0401	RL0401		RL0402		RL0403	
CS10	—	—	—	—	—	—	5'-0"	5	12	12	12	12	5'-0"	10	22	22	22	22	10	3'-0"	10	6'-6"	10	9'-6"
CS12	2'-0"	2	6	6	6	6	7'-0"	7	16	16	16	16	6'-0"	12	26	26	26	26	10	5'-0"	10	8'-6"	10	11'-6"
CS14	4'-0"	4	10	10	10	10	4'-6"	9	20	20	20	20	7'-0"	14	30	30	30	30	10	7'-0"	10	10'-6"	10	13'-6"
CS16	6'-0"	6	14	14	14	14	5'-6"	11	24	24	24	24	8'-0"	16	34	34	34	34	10	9'-0"	10	12'-6"	10	15'-6"
CS18	8'-0"	8	18	18	18	18	6'-6"	13	28	28	28	28	6'-0"	18	38	38	38	38	10	11'-0"	10	14'-6"	10	17'-6"
CS20	5'-0"	10	22	22	22	22	7'-6"	15	32	32	32	32	6'-8"	20	42	42	42	42	10	13'-0"	10	16'-6"	10	19'-6"
CS22	6'-0"	12	26	26	26	26	5'-8"	17	36	36	36	36	7'-4"	22	46	46	46	46	10	15'-0"	10	18'-6"	10	21'-6"
CS27	8'-6"	17	36	36	36	36	7'-4"	22	46	46	46	46	6'-9"	27	56	56	56	56	10	20'-0"	10	23'-6"	10	26'-6"
CS32	7'-4"	22	46	46	46	46	6'-9"	27	56	56	56	56	8'-0"	32	66	66	66	66	10	25'-0"	10	28'-6"	10	31'-6"

"n" = Number of spaces of RV and RT series.

Note:

Number of bars shown are for parapets on both sides of slab.

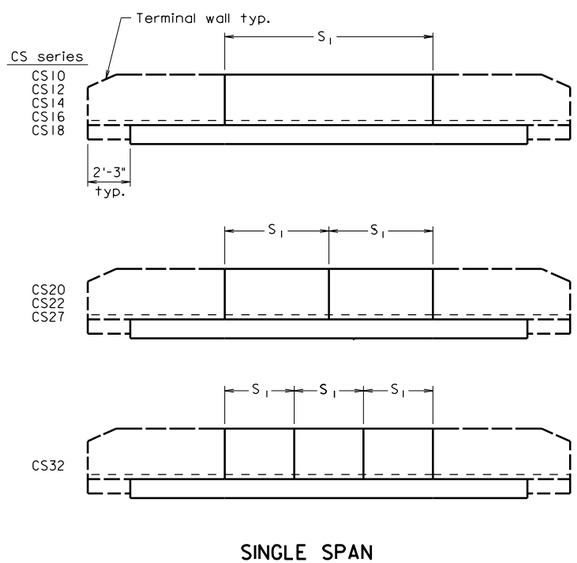

SINGLE SPAN

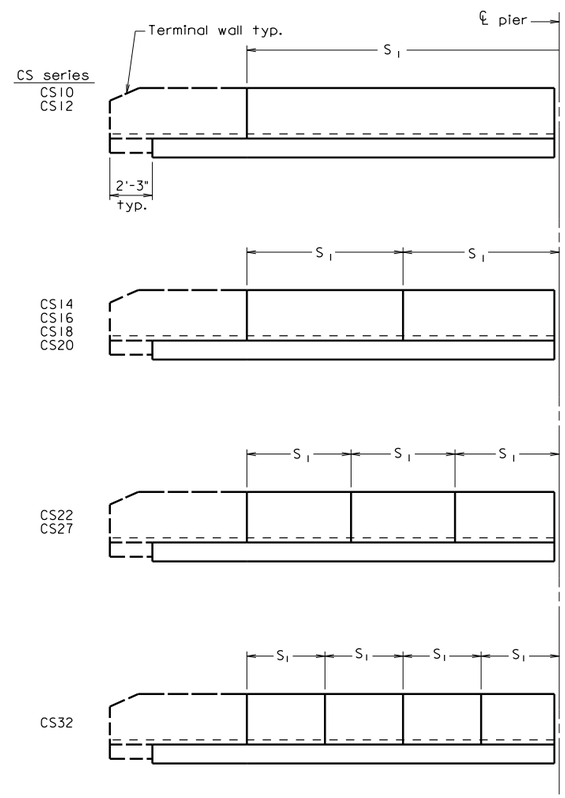

END SPAN

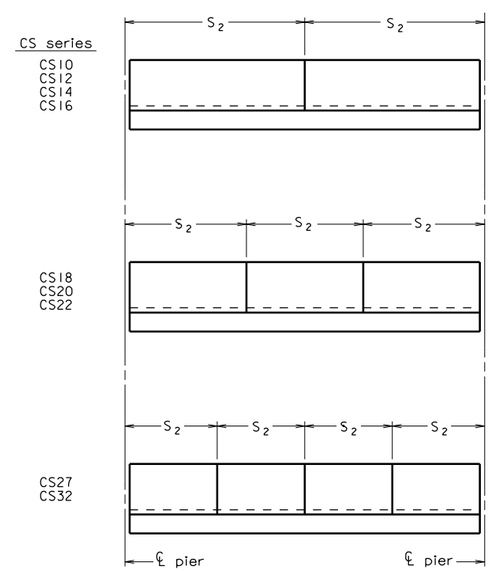

INTERMEDIATE SPAN

csp2.dgn

06-14-2010

CS-P2

Sealed and Signed by:
Julius F.J. Volgyi Jr.
Lic. No. 010487
On the date of
June 14, 2010

A copy of the original sealed and signed standard drawing is on file in the Central Office.

VDOT S&B DIVISION
RICHMOND, VA
STRUCTURAL ENGINEER

Not to scale

©2010, Commonwealth of Virginia

No.	Description	Date
	Revisions	

COMMONWEALTH OF VIRGINIA
DEPARTMENT OF TRANSPORTATION

STRUCTURE AND BRIDGE DIVISION

CAST-IN-PLACE CONCRETE PARAPET (F-SHAPE)

Designed:	Date	Plan No.	Sheet No.
Drawn:		CS-P2	
Checked:			

CAST-IN-PLACE
CONCRETE PARAPET (F-SHAPE)

NOTES TO DESIGNER:

Standard to be used when cast-in-place concrete parapet (F-Shape) is required. This standard is to be used in conjunction with CS-P1 and CS-P3.

ADD THE FOLLOWING NOTES, DIMENSIONS, DETAILS, ETC. TO STANDARD:

PROJECT/TITLE BLOCKS:

Project block and title block shall be completed in accordance with Manual of the Structure and Bridge Division, Volume V – Part 2, Chapter 4.

ESTIMATED QUANTITIES:

Compute estimated quantities for the following and enter in the table of ESTIMATED QUANTITIES on CS-EST:

- Concrete Parapet

STATE	FEDERAL AID ROUTE	FEDERAL AID PROJECT	STATE ROUTE	STATE PROJECT	SHEET NO.
VA.	—				

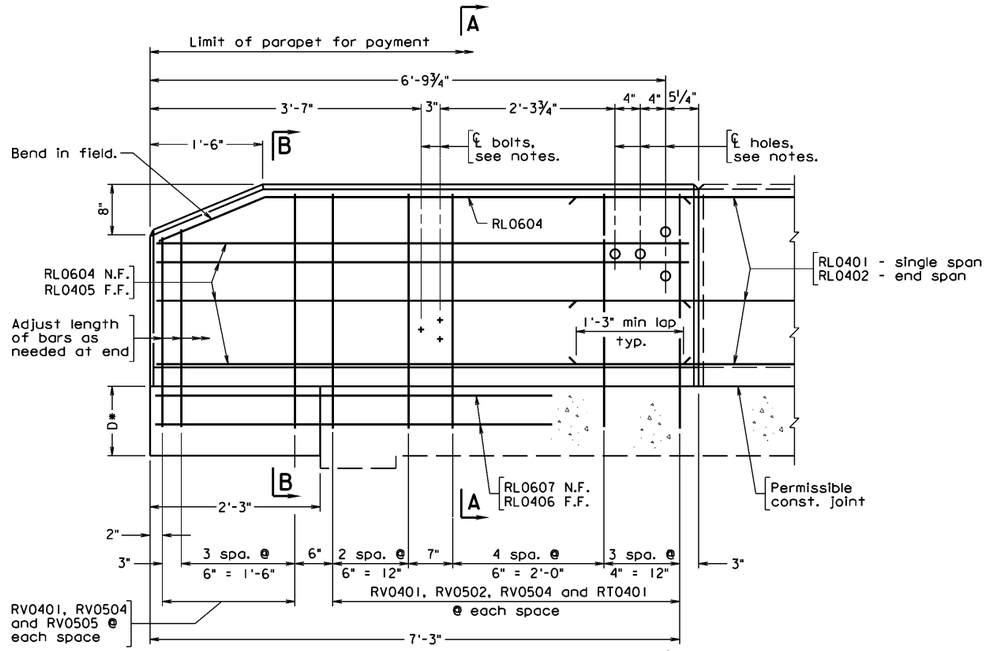

*D = depth of slab or 1'-3" max.

ELEVATION

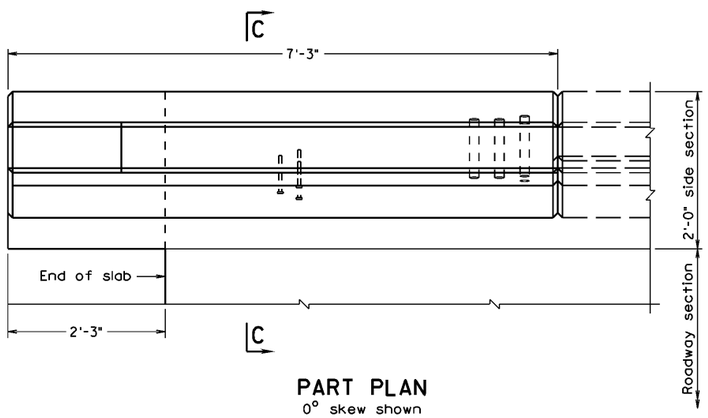

PART PLAN

0° skew shown

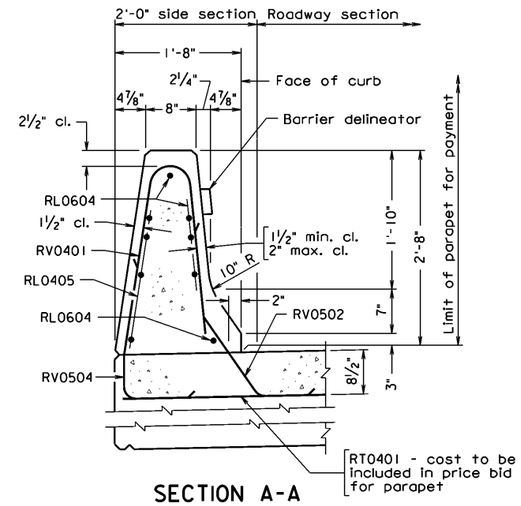

SECTION A-A

Reinforcing steel in slab not shown

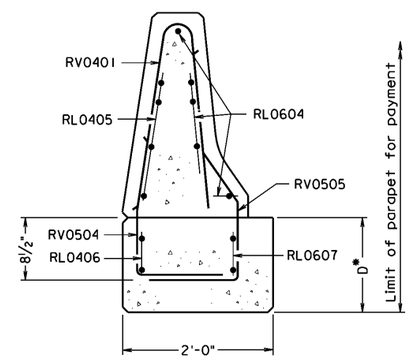

SECTION B-B

Holes and bolts not shown. For details not shown, see Section A-A or Section C-C.

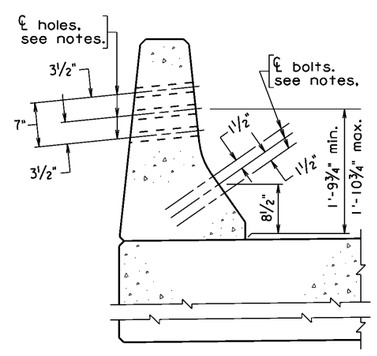

SECTION C-C

Reinforcing steel not shown

Notes:

All reinforcing bars shall be Corrosion Resistant Reinforcing Steel, Class --.

All bevels for concrete on this sheet shall be ¾". Rounded edges with 1" radius may be used in lieu of bevels along top of terminal wall.

Each terminal wall shall be cast as one piece.

All concrete shall be Class A4.

All reinforcing bar dimensions on the detailed drawings are to centers of bars except where otherwise noted and are subject to fabrication and construction tolerances.

The number of bars shown in the Reinforcing Steel Schedule is computed for four (4) terminal walls.

Terminal walls are detailed to take fixed object attachment GR-FOA-2.

Barrier delineator size, color and spacing to be in accordance with the Specifications. Cost of barrier delineator to be included in the price bid for concrete parapet. Reflective surface of barrier delineator, in all instances, to be facing oncoming traffic.

Holes, where shown, shall be formed with sleeves of 1½" dia. nominal pipe.

Bolts, where shown, shall be ⅝" dia. Expansion Anchor Bolts, 6" long to be drilled and installed when rub rail is attached.

Bid item for concrete parapet shall include concrete noted in plans and reinforcing steel indicated in Reinforcing Steel Schedule.

REINFORCING STEEL SCHEDULE

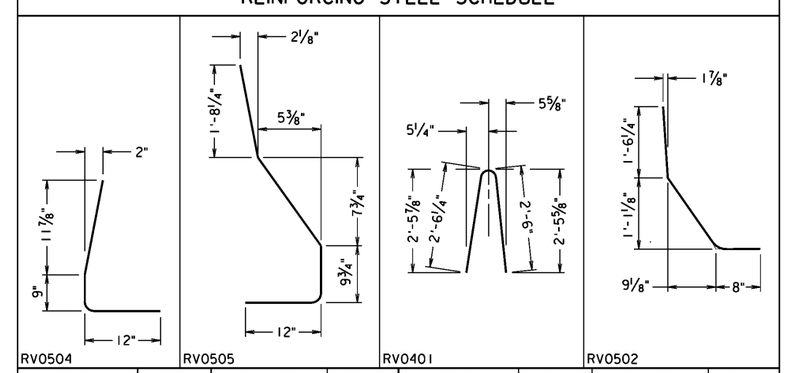

Mark	No.	Length	Pin ø	Mark	No.	Length	Pin ø
RL0604	20	6'-10"	——	RV0502	44	3'-5⅝"	3¾"
RL0405	16	6'-10"	——	RV0504	64	2'-7"	3¾"
RL0406	8	4'-0"	——	RV0505	20	4'-2"	3¾"
RL0607	8	4'-0"	——	RT0401	44	3'-0"	——
RV0401	64	5'-2"	4½"				

Note: Dimensions in bending diagram are out-to-out of bars, except as shown.

Not to scale

©2013, Commonwealth of Virginia

No.	Description	Date
	Revisions	

COMMONWEALTH OF VIRGINIA
DEPARTMENT OF TRANSPORTATION

STRUCTURE AND BRIDGE DIVISION

TERMINAL WALLS

Designed: .....
Drawn: .....
Checked: .....

Date

Plan No. CS-P3

Sheet No.

CS-P3.dgn

01-25-2013

Sealed and Signed by:
Julius F.J. Volgyi Jr.
Lic. No. 010487
On the date of
January 25, 2013

A copy of the original sealed and signed standard drawing is on file in the Central Office.

VDOT S&B DIVISION
RICHMOND, VA
STRUCTURAL ENGINEER

CS-P3

CAST-IN-PLACE CONCRETE SLAB SPANS

TERMINAL WALLS

NOTES TO DESIGNER:

Standard to be used when cast-in-place concrete parapet (F-Shape) is required. This standard is to be used in conjunction with CS-P1 and CS-P2.

ADD THE FOLLOWING NOTES, DIMENSIONS, DETAILS, ETC. TO STANDARD:

PROJECT/TITLE BLOCKS:

Project block and title block shall be completed in accordance with Manual of the Structure and Bridge Division, Volume V – Part 2, Chapter 4.

NOTES:

Complete eighth note by adding the Class I, II or III of corrosion resistant reinforcing steel required. For additional information on corrosion resistant reinforcing steels (CRR), see Structure and Bridge Division Memorandum (current IIM-S&B-81).

STATE	FEDERAL AID ROUTE	FEDERAL AID PROJECT	STATE ROUTE	STATE PROJECT	SHEET NO.
VA.	—				

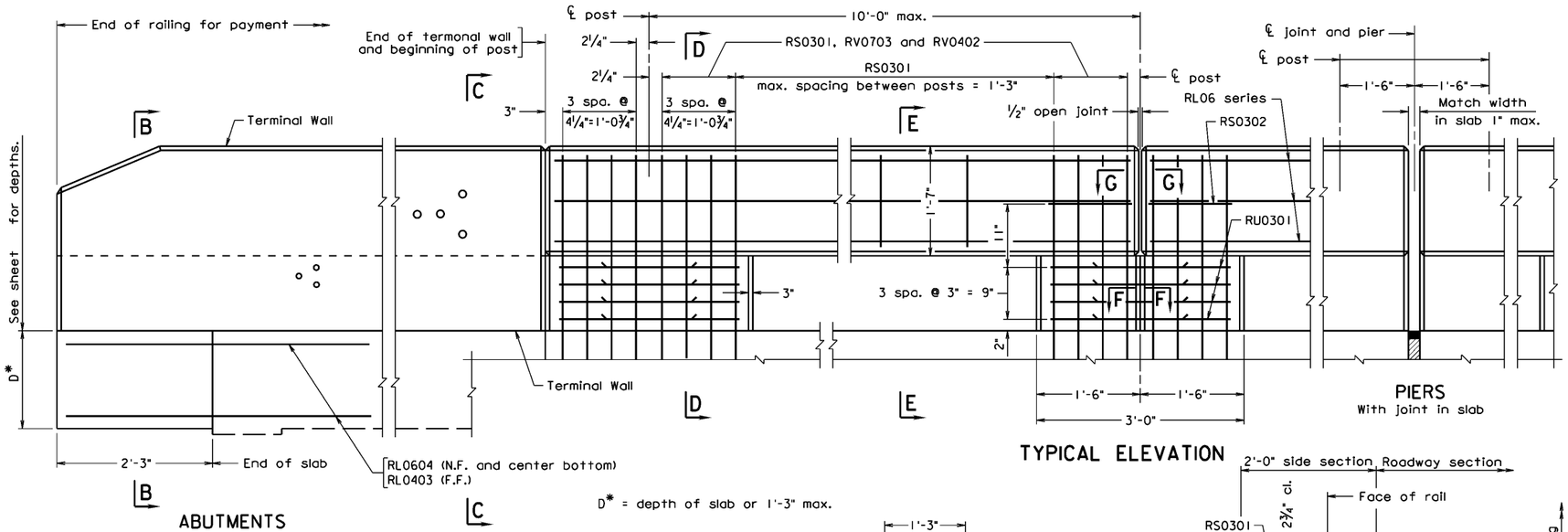

TYPICAL ELEVATION

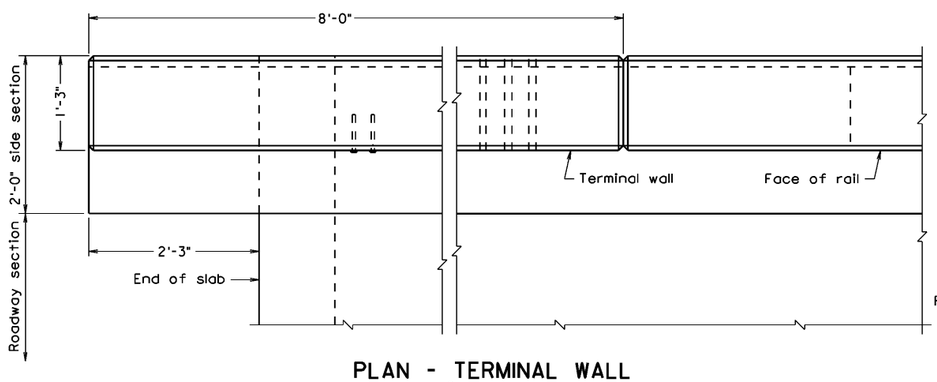

PLAN - TERMINAL WALL
(0° skew shown)

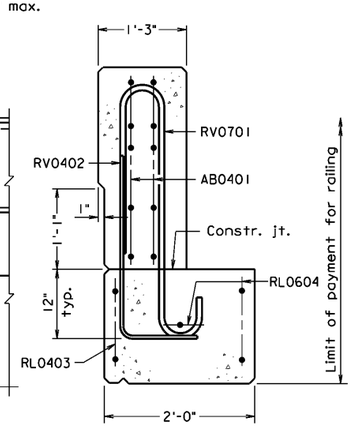

SECTION B-B

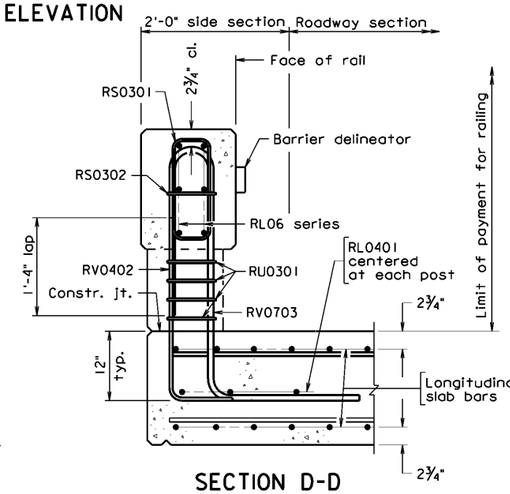

SECTION D-D

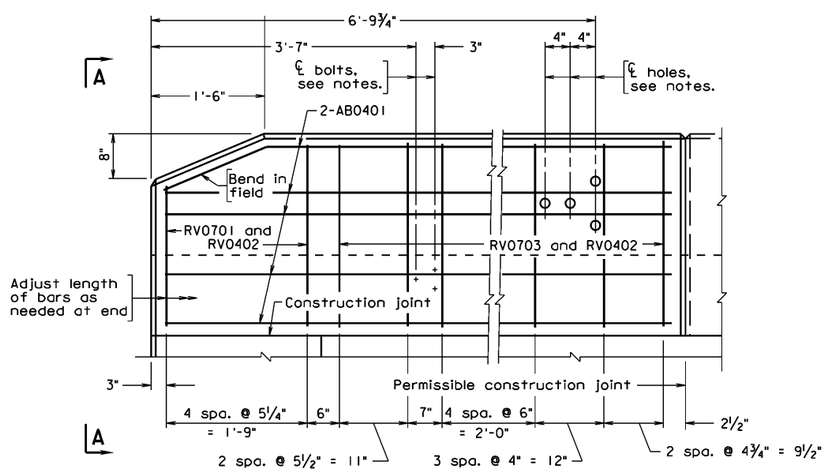

ELEVATION - TERMINAL WALL

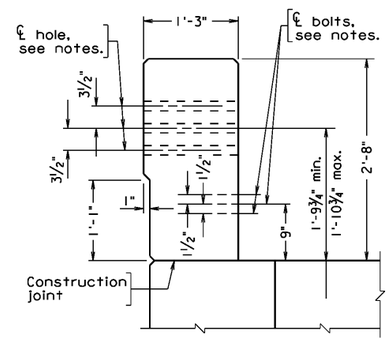

VIEW A-A

Not to scale

© 2013, Commonwealth of Virginia

Notes:

All reinforcing bars shall be Corrosion Resistant Reinforcing Steel, Class __.

All bevels for concrete on this sheet shall be ¾". Rounded edges with 1" radius may be used in lieu of bevels along top of terminal wall and railing.

All concrete shall be Class A4.

Each terminal wall shall be cast as one piece.

Barrier delineator size, color, and spacing to be in accordance with the Specifications. Cost of delineator to be included in the price bid for railing. Reflective surface of barrier delineator, in all instances, to be facing oncoming traffic.

The Contractor shall determine all dimensions and details necessary for installation.

Terminal walls are detailed to take guard rail attachment GR-F0A-1.

Holes, where shown, shall be formed with sleeves of 1½" diameter nominal pipe.

Bolts, where shown, shall be ⅝" dia. expansion anchor bolts, 6" long to be drilled and installed when rub rail is attached.

Bid item for railing shall include concrete noted in plans and reinforcing steel indicated in Reinforcing Steel Schedule.

For Sections C-C, E-E, F-F and G-G, see CS-CR2.

REINFORCING STEEL SCHEDULE

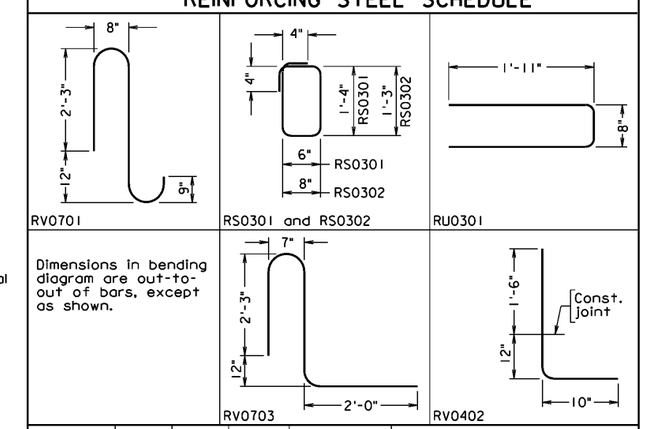

Mark	No.	Size	Pin ø	Length	Location
AB0401	·	#4	—	7'-9"	Terminal wall
RL0401	·	#4	—	6'-6"	Slab at posts
RL06	·	#6	—	·	Rail
RL0403	·	#4	—	4'-0"	Slab and Terminal Wall
RL0604	·	#6	—	4'-0"	Slab and Terminal Wall
RS0301	·	#3	2¼"	3'-11"	Rail
RS0302	·	#3	2¼"	4'-1"	Posts
RU0301	·	#3	2¼"	4'-4"	Posts
RV0701	·	#7	5¼"	6'-10"	Terminal Wall
RV0402	·	#4	3"	3'-3"	Terminal Wall
RV0703	·	#7	5¼"	10'-3"	Posts and Terminal Wall

Gross concrete quantities above roadway slab:
Railing: C.Y. = Lin. Ft. x 0.085

No.	Description	Date

Revisions

COMMONWEALTH OF VIRGINIA
DEPARTMENT OF TRANSPORTATION

STRUCTURE AND BRIDGE DIVISION

CAST-IN-PLACE CONCRETE RAILING (32" KANSAS CORRAL)

Designed: .....
Drawn: .....
Checked: .....

Date

Plan No. CS-CR1

Sheet No.

CS-CR1.dgn

01-25-2013

Sealed and Signed by:
Julius F.J. Volgyi Jr.
Lic. No. 010487
On the date of
January 25, 2013

A copy of the original sealed and signed standard drawing is on file in the Central Office.

VDOT S&B DIVISION
RICHMOND, VA
STRUCTURAL ENGINEER

CS-CR1

CAST-IN-PLACE CONCRETE SLAB SPANS

CAST-IN-PLACE CONCRETE RAILING
32" KANSAS CORRAL WITHOUT CURB

NOTES TO DESIGNER:

The Kansas Corral Railing with a railing height of 2'-8" has been crash tested for TL-4 (TL = test level). The original rail has been modified as follows: rail width increased from 12" to 15" and the width of the post increased from 10" to 12". Dimensions were changed to allow for additional reinforcement cover.

Use standard only for structures with low traffic volume that require increased hydraulic opening and/or visibility and when approach roadway has no curb. Standard is not intended to be used with sidewalk curb(s). Standard may not be used for concrete slab spans having a slab thickness less than 15". This standard is to be used in conjunction with CS-CR2.

It is the Contractor's responsibility to determine the number of reinforcing bars required as well as any other details required for installation. Therefore, the remainder of the Reinforcing Steel Schedule, including number of bars required, is to be left blank by the designer.

ADD THE FOLLOWING NOTES, DIMENSIONS, DETAILS, ETC. TO STANDARD:

PROJECT/TITLE BLOCKS:

Project block and title block shall be completed in accordance with Manual of the Structure and Bridge Division, Volume V – Part 2, Chapter 4.

NOTES:

Complete first note by adding the Class I, II or III of corrosion resistant reinforcing steel required. For additional information on corrosion resistant reinforcing steels (CRR), see Structure and Bridge Division Memorandum (current IIM-S&B-81).

STATE	FEDERAL AID ROUTE	FEDERAL AID PROJECT	STATE ROUTE	STATE PROJECT	SHEET NO.
VA.	—				

Notes:

POST SPACING

Span	SINGLE SPAN	END SPAN	INTERMEDIATE SPAN
	S_1	S_1	S_2
CS18	3'-6"	9'-3"	7'-6"
CS20	5'-6"	5'-7½"	8'-6"
CS22	7'-6"	6'-7½"	9'-6"
CS27	6'-3"	9'-1½"	8'-0"
CS32	8'-9"	7'-9"	9'-8"

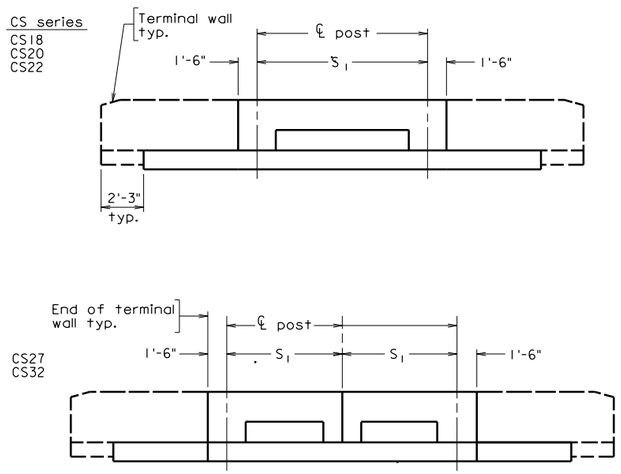

SINGLE SPAN

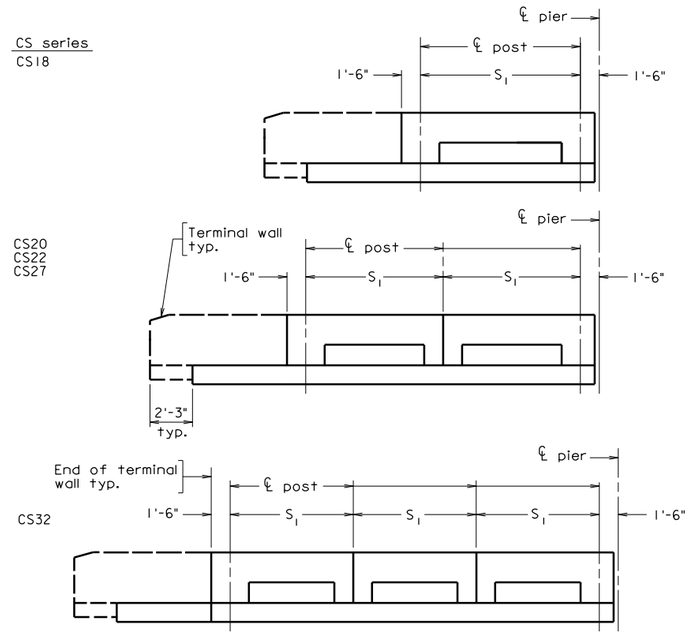

END SPAN

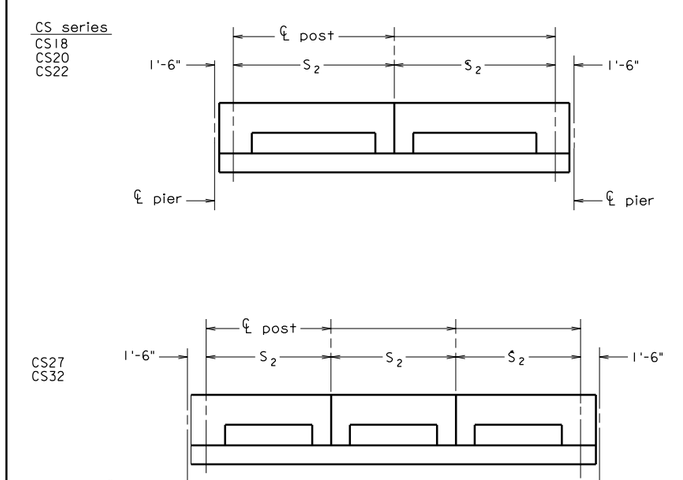

INTERMEDIATE SPAN

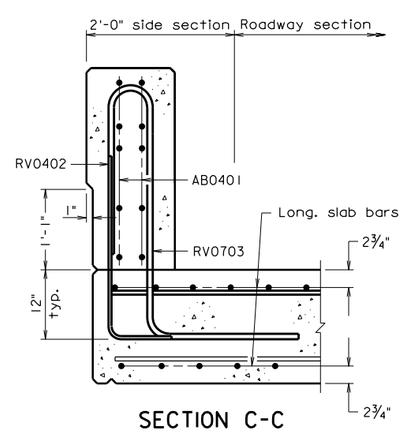

SECTION C-C

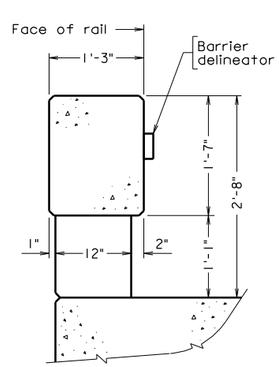

SECTION E-E
(Typ. section between posts)

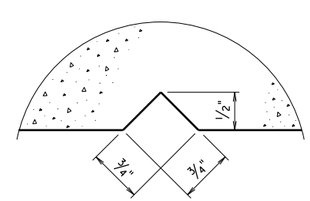

SECTION F-F
Groove detail for both sides of post

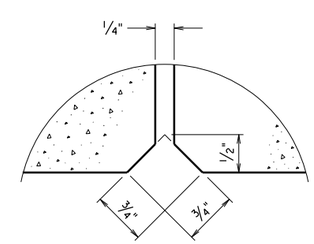

SECTION G-G
Deflection joint detail for both sides of post

Not to scale

©2010, Commonwealth of Virginia

No.	Description	Date
	Revisions	

COMMONWEALTH OF VIRGINIA
DEPARTMENT OF TRANSPORTATION

STRUCTURE AND BRIDGE DIVISION

CAST-IN-PLACE CONCRETE RAILING (32" KANSAS CORRAL)

Designed: .....
Drawn: .....
Checked: .....

Date

Plan No. CS-CR2

Sheet No.

cscr2.dgn

06-14-2010

CS-CR2

Sealed and Signed by:
Julius F.J. Volgyi Jr.
Lic. No. 010487
On the date of
June 14, 2010

A copy of the original sealed and signed standard drawing is on file in the Central Office.

VDOT S&B DIVISION
RICHMOND, VA
STRUCTURAL ENGINEER

CAST-IN-PLACE CONCRETE SLAB SPANS

CAST-IN-PLACE CONCRETE RAILING
32" KANSAS CORRAL WITHOUT CURB

NOTES TO DESIGNER:

Standard to be used when cast-in-place concrete railing (32" Kansas Corral) is required. This standard is to be used in conjunction with CS-CR1.

ADD THE FOLLOWING NOTES, DIMENSIONS, DETAILS, ETC. TO STANDARD:

PROJECT/TITLE BLOCKS:

Project block and title block shall be completed in accordance with Manual of the Structure and Bridge Division, Volume V – Part 2, Chapter 4.

ESTIMATED QUANTITIES:

Compute estimated quantities for the following and enter in the table of ESTIMATED QUANTITIES on CS-EST:

- Railing, Kansas Corral

STATE	FEDERAL AID ROUTE	FEDERAL AID PROJECT	STATE ROUTE	STATE PROJECT	SHEET NO.
VA.	—				

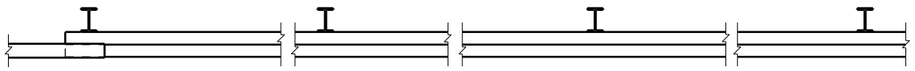

PLAN
Not to scale

Note:
Maintain 6'-3" post spacing for use with 25' standard rail section

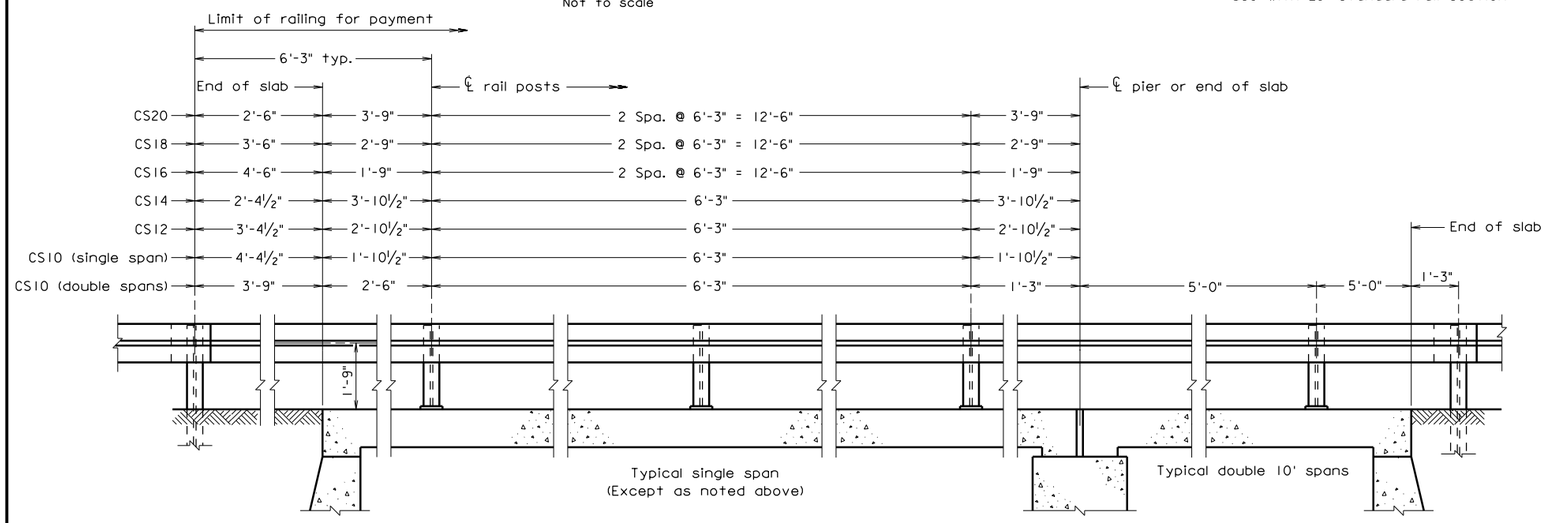

LONGITUDINAL SECTION (ALONG ℄ BRIDGE)
Not to scale

Notes:

All structural steel, including bolts, nuts, and washers shall be galvanized.

For details of guardrail, see GR-2 of the Road and Bridge Standards.

The guardrail installation shall conform with Section 505 of the Virgina Department of Transportation Road and Bridge Specifications, 2002.

Rail posts may be vertical or perpendicular to adjacent roadway grade and cross slope. Grout may be used under base plates if necessary.

Details on this sheet are to be used for both straight and skewed bridges.

Rail shall extend across joints with no change in post spacing or continuity.

Anchor bolts shall be ⅞" ø A307 (or A36 threaded rods with tack welded nuts) with hex nuts and washers as shown. Threaded rods may be 0.781 min. diameter with rolled threads. Nuts shall conform to A307 requirements and shall be tapped or chased after galvanizing. Bolts and nuts shall have Class 2A and 2B fit tolerances.

Tubular rail member shall be extended and connected to at least the first soil embedded post at each end of the structure. More such posts shall be used to utilize 25 ft. standard sections. Approach guardrail posts shall be spaced at 6'-3" adjacent to the tubular rail since its flexibility is similar to the standard metal beam guardrail. Do not install additional posts at 3'-1½" centers. Fully anchored guardrail must be attached at both ends of tubular rail.

Test have shown that altough this rail deflects horizontally two or three feet, adequate vehicle containment and re-direction is achived. The resulting more gradual deceleration thus produces a safer condition than afforded by other bridge railings.

For details of slabs not shown, see sheet .

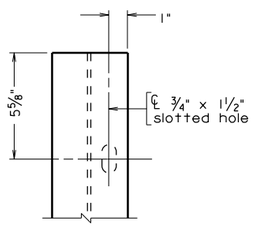

VIEW A-A
Scale: 3" = 1'-0"

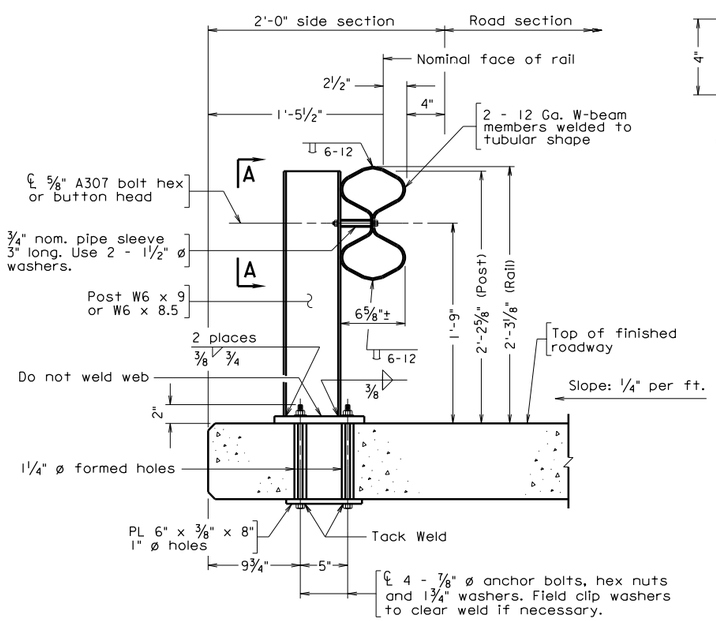

PART TRANSVERSE SECTION

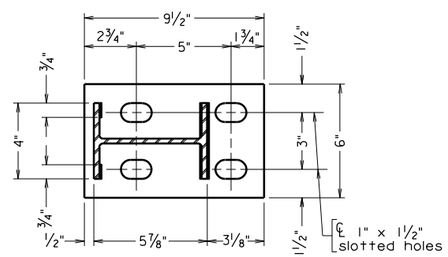

⅝" BASE PLATE
Scale: 3" = 1'-0"

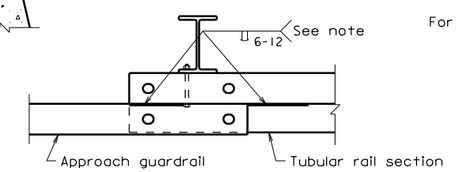

PLAN

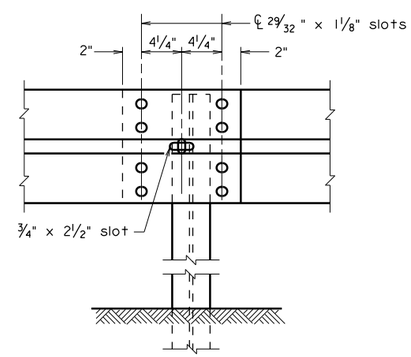

GUARDRAIL-TUBULAR RAIL SPLICE

Note:

Tubular W-beam rail memeber is to be fabricated from standard 25' nominal W-beam sections. Top and bottom seams shall be butt welded 6" at 12" spacing. Continous seam welding is also acceptable. Welds shall be clipped and cleaned and the complete 25 ft. tubular member shall be galvanized after fabrication.

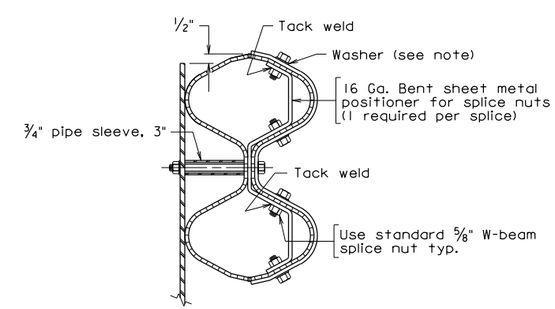

SPLICE DETAIL
Scale: 3" = 1'-0"

Note:

8 - ⅝" splice nuts shall be tacked to a bent sheet metal positioner as shown. Other suitable positioning methods or devices may be substituted. The completed splice shall have 8 bolts. Each bolt will include a 1 ¾" x 3 x 3/16" plate washer or a 2" diameter washer.

Scale: 1½" = 1'-0" unless otherwise noted

©2010, Commonwealth of Virginia

csgr.dgn

06-14-2010

CS-GR

Sealed and Signed by:
Julius F.J. Volgyi Jr.
Lic. No. 010487
On the date of
June 14, 2010

A copy of the original sealed and signed standard drawing is on file in the Central Office.

VDOT S&B DIVISION
RICHMOND, VA
STRUCTURAL ENGINEER

No.	Description	Date
	Revisions	

COMMONWEALTH OF VIRGINIA
DEPARTMENT OF TRANSPORTATION

STRUCTURE AND BRIDGE DIVISION

RAILING (TEXAS T-6)

Designed:	Date	Plan No.	Sheet No.
Drawn:		CS-GR	
Checked:			

CAST-IN-PLACE CONCRETE SLAB SPANS

RAILING (TEXAS T-6)

NOTES TO DESIGNER:

Railing (CS-GR) may be used in lieu of cast-in-place concrete parapet (F-Shape) (CS-P1, CS-P2 and CS-P3) when the overall bridge length does not exceed 20'-0". This bridge guardrail has been crash tested for TL-2 (TL = test level).

ADD THE FOLLOWING NOTES, DIMENSIONS, DETAILS, ETC. TO STANDARD:

PROJECT/TITLE BLOCKS:

Project block and title block shall be completed in accordance with Manual of the Structure and Bridge Division, Volume V – Part 2, Chapter 4.

ESTIMATED QUANTITIES:

Compute estimated quantities for the following and enter in table of ESTIMATED QUANTITIES on CS-EST:

- Railing, Texas T-6

ESTIMATED QUANTITES	
Span Length, ft.	* Railing (Texas T-6), LF
10	50
12	50
14	50
16	50
18	50
20	50

*Two – 25 ft. tubular rail sections shall be furnished and installed regardless of bridge length.

CAST-IN-PLACE CONCRETE SLAB SPANS
CELL LIBRARY: CS.CEL

INDEX OF CELLS

CELL NAME	FILE NO.	DATE
BS	CSCELLS-1	11Jul2008
BSA	CSCELLS-1	11Jul2008
P1004	CSCELLS-2	11Jul2008
P1005	CSCELLS-2	11Jul2008
P1006	CSCELLS-2	11Jul2008
P1007	CSCELLS-3	11Jul2008
P1008	CSCELLS-3	11Jul2008
P1009	CSCELLS-3	11Jul2008
P1010	CSCELLS-4	11Jul2008
P1011	CSCELLS-4	11Jul2008
P1012	CSCELLS-5	11Jul2008
P1013	CSCELLS-5	11Jul2008
P1014	CSCELLS-6	11Jul2008
P1304	CSCELLS-6	11Jul2008
P1305	CSCELLS-7	11Jul2008
P1306	CSCELLS-7	11Jul2008
P1307	CSCELLS-8	11Jul2008
P1308	CSCELLS-8	11Jul2008
P1309	CSCELLS-9	11Jul2008
P1310	CSCELLS-9	11Jul2008
P1311	CSCELLS-10	11Jul2008
P1312	CSCELLS-10	11Jul2008
P1313	CSCELLS-11	11Jul2008
P1314	CSCELLS-11	11Jul2008
P1404	CSCELLS-12	11Jul2008
P1405	CSCELLS-12	11Jul2008
P1406	CSCELLS-13	11Jul2008
P1407	CSCELLS-13	11Jul2008
P1408	CSCELLS-14	11Jul2008
P1409	CSCELLS-14	11Jul2008
P1410	CSCELLS-15	11Jul2008
P1411	CSCELLS-15	11Jul2008
P1412	CSCELLS-16	11Jul2008
P1413	CSCELLS-16	11Jul2008
P1414	CSCELLS-17	11Jul2008
P2004	CSCELLS-17	11Jul2008
P2005	CSCELLS-18	11Jul2008
P2006	CSCELLS-18	11Jul2008
P2007	CSCELLS-18	11Jul2008
P2008	CSCELLS-19	11Jul2008
P2009	CSCELLS-19	11Jul2008
P2010	CSCELLS-19	11Jul2008
P2011	CSCELLS-20	11Jul2008

CAST-IN-PLACE CONCRETE SLAB SPANS
CELL LIBRARY: CS.CEL

INDEX OF CELLS (CONT'D)

CELL NAME	FILE NO.	DATE
P2012	CSCELLS-20	11Jul2008
P2013	CSCELLS-21	11Jul2008
P2014	CSCELLS-21	11Jul2008
P2304	CSCELLS-22	11Jul2008
P2305	CSCELLS-22	11Jul2008
P2306	CSCELLS-23	11Jul2008
P2307	CSCELLS-23	11Jul2008
P2308	CSCELLS-24	11Jul2008
P2309	CSCELLS-24	11Jul2008
P2310	CSCELLS-25	11Jul2008
P2311	CSCELLS-25	11Jul2008
P2312	CSCELLS-26	11Jul2008
P2313	CSCELLS-26	11Jul2008
P2314	CSCELLS-27	11Jul2008
P2404	CSCELLS-27	11Jul2008
P2405	CSCELLS-28	11Jul2008
P2406	CSCELLS-28	11Jul2008
P2407	CSCELLS-29	11Jul2008
P2408	CSCELLS-29	11Jul2008
P2409	CSCELLS-30	11Jul2008
P2410	CSCELLS-30	11Jul2008
P2411	CSCELLS-31	11Jul2008
P2412	CSCELLS-31	11Jul2008
P2413	CSCELLS-32	11Jul2008
P2414	CSCELLS-32	11Jul2008
PL0	CSCELLS-33	11Jul2008
PL30L	CSCELLS-33	11Jul2008
PL30R	CSCELLS-34	11Jul2008
PL45L	CSCELLS-34	11Jul2008
PL45R	CSCELLS-35	11Jul2008
PP01	CSCELLS-35	11Jul2008
PP02	CSCELLS-36	11Jul2008
PT1	CSCELLS-36	11Jul2008
PT1A	CSCELLS-37	11Jul2008
PT2	CSCELLS-37	11Jul2008
PT2A	CSCELLS-38	11Jul2008
PT3	CSCELLS-38	11Jul2008
PT3A	CSCELLS-39	11Jul2008
PT4	CSCELLS-39	11Jul2008
PT4A	CSCELLS-40	11Jul2008

CELL	CELL NAME	CELL DESCRIPTION

BS

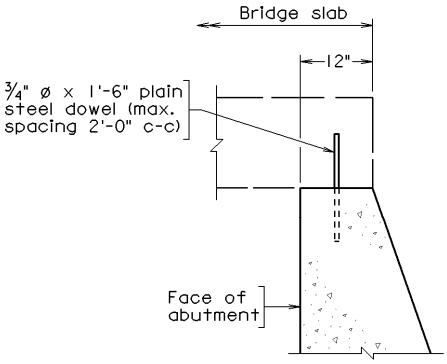

TYPICAL BRIDGE SEATS

Typical Bridge Seats
No approach slab
(approx. 0.50 of actual cell size)

BSA

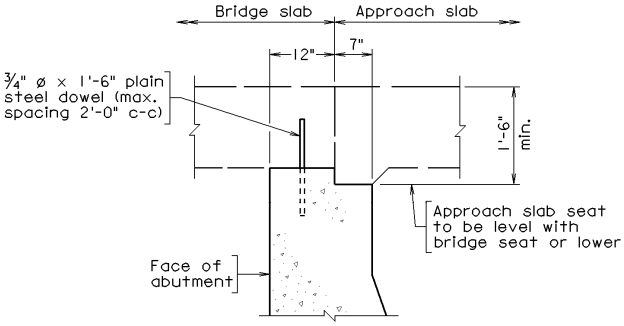

TYPICAL BRIDGE AND APPROACH SLAB SEATS

Typical Bridge Seats
With approach slab
(approx. 0.45 of actual cell size)

CELL	CELL NAME	CELL DESCRIPTION

P1004

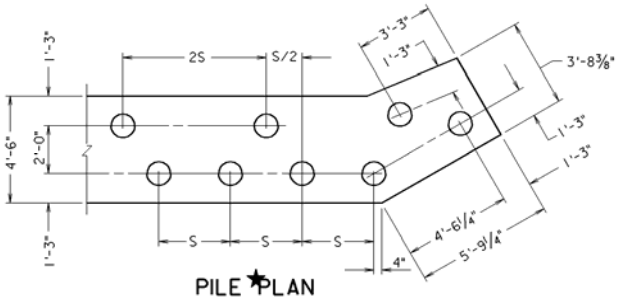

Abutment on Piles Pile Plan
0° Skew – Fill Slope 1 ½ : 1 - H = 4'
S = 3'-0" to 3'-6"
(approx. 0.45 of actual cell size)

P1005

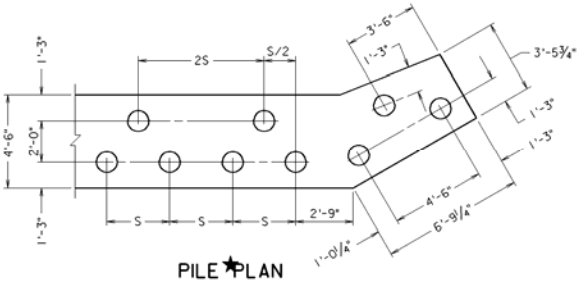

Abutment on Piles Pile Plan
0° Skew – Fill Slope 1 ½ : 1 - H = 5'
S = 3'-0" to 3'-6"
(approx. 0.35 of actual cell size)

P1006

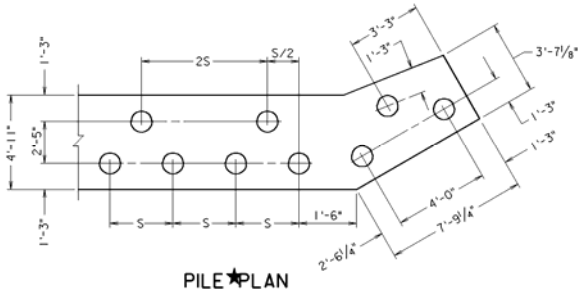

Abutment on Piles Pile Plan
0° Skew – Fill Slope 1 ½ : 1 - H = 6'
S = 3'-0" to 3'-6"
(approx. 0.35 of actual cell size)

CELL	CELL NAME	CELL DESCRIPTION

P1007

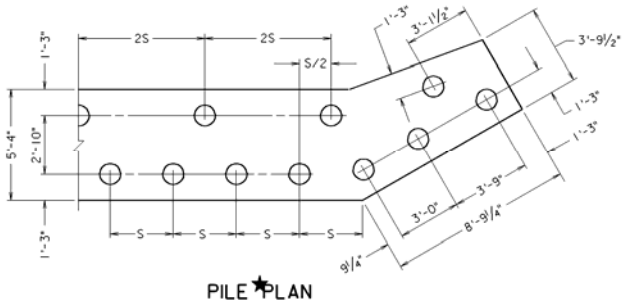

Abutment on Piles Pile Plan
0° Skew – Fill Slope 1 ½ : 1 - H = 7'
S = 2'-9" to 3'-3"
(approx. 0.35 of actual cell size)

P1008

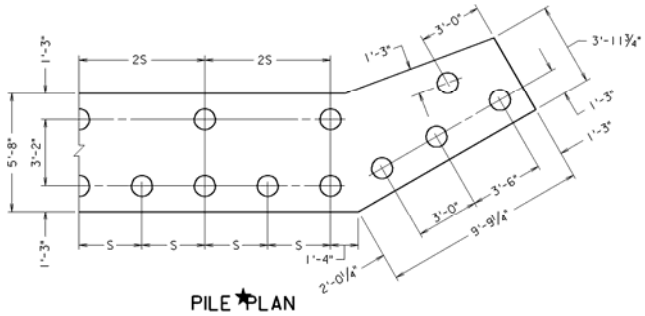

Abutment on Piles Pile Plan
0° Skew – Fill Slope 1 ½ : 1 - H = 8'
S = 2'-9" to 3'-3"
(approx. 0.35 of actual cell size)

P1009

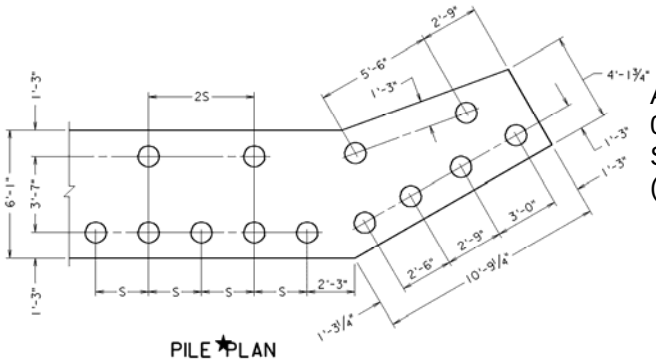

Abutment on Piles Pile Plan
0° Skew – Fill Slope 1 ½ : 1 - H = 9'
S = 2'-6" to 2'-9"
(approx. 0.35 of actual cell size)

CELL	CELL NAME	CELL DESCRIPTION

P1010

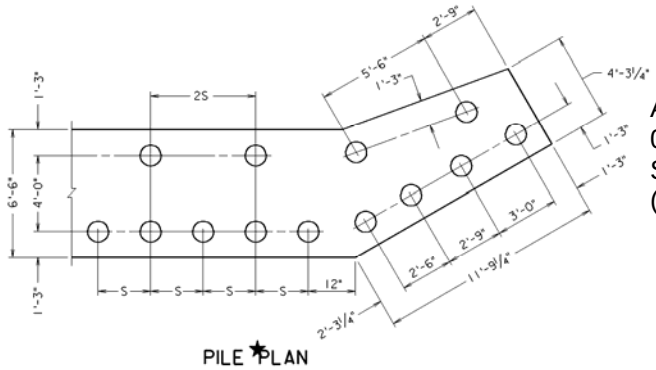

Abutment on Piles Pile Plan
0° Skew – Fill Slope 1 ½ : 1 - H = 10'
S = 2'-6" to 2'-8"
(approx. 0.35 of actual cell size)

P1011

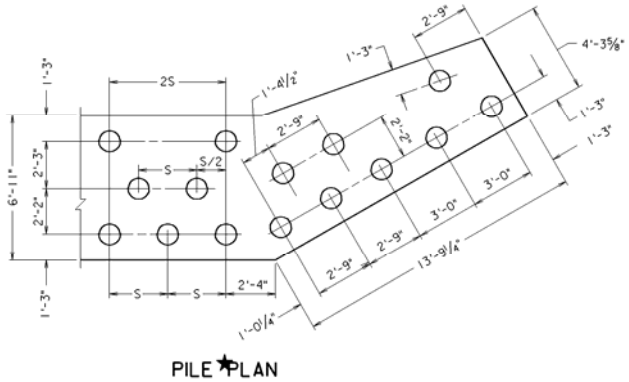

Abutment on Piles Pile Plan
0° Skew – Fill Slope 1 ½ : 1 - H = 11'
S = 2'-9" to 3'-0"
(approx. 0.35 of actual cell size)

CELL	CELL NAME	CELL DESCRIPTION

P1012

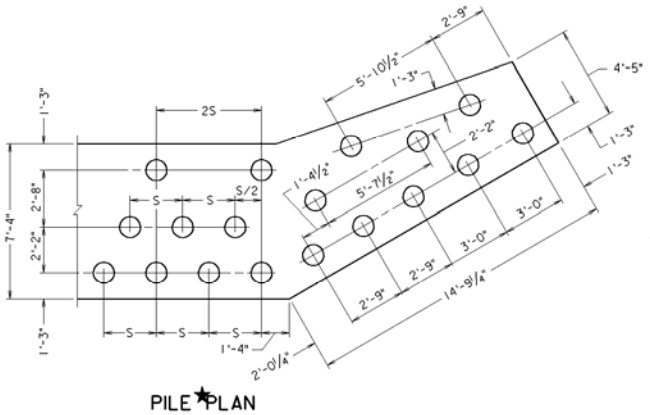

Abutment on Piles Pile Plan
0° Skew – Fill Slope 1 ½ : 1 - H = 12'
S = 2'-6" to 2'-9"
(approx. 0.35 of actual cell size)

P1013

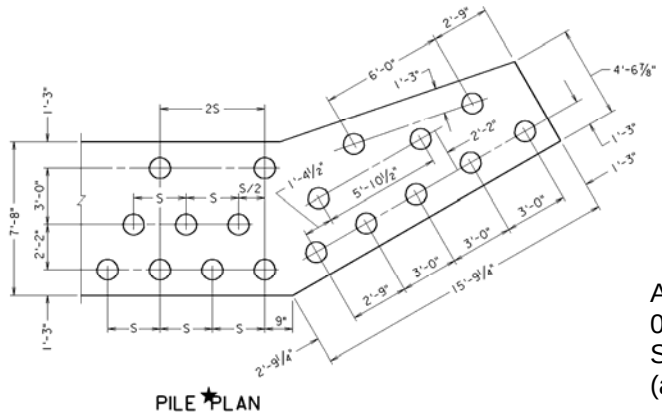

Abutment on Piles Pile Plan
0° Skew – Fill Slope 1 ½ : 1 - H = 13'
S = 2'-6" to 2'-9"
(approx. 0.35 of actual cell size)

CELL	CELL NAME	CELL DESCRIPTION

P1014

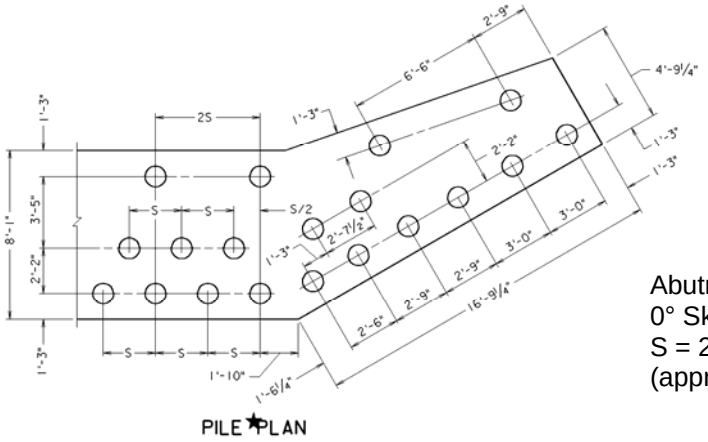

Abutment on Piles Pile Plan
0° Skew – Fill Slope 1 ½ : 1 - H = 12'
S = 2'-6" to 2'-8"
(approx. 0.35 of actual cell size)

P1304

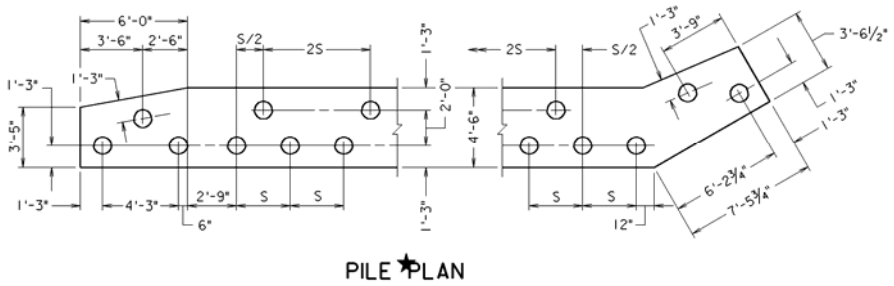

Abutment on Piles Pile Plan
30° Skew – Fill Slope 1 ½ : 1 - H = 4'
S = 3'-0" to 3'-6"
(approx. 0.40 of actual cell size)

CELL	CELL NAME	CELL DESCRIPTION

P1305

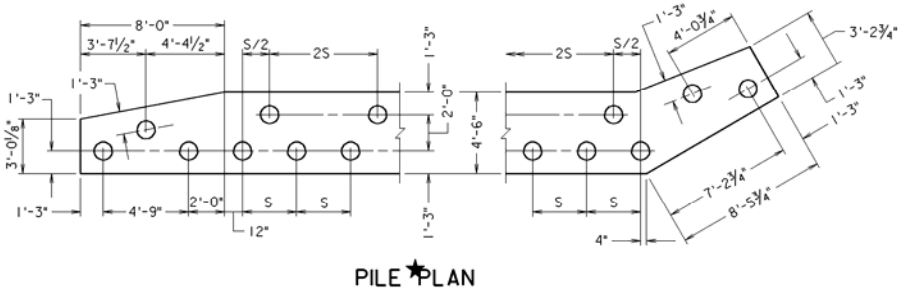

Abutment on Piles Pile Plan
30° Skew – Fill Slope 1 ½ : 1 - H = 5'
S = 3'-0" to 3'-6"
(approx. 0.40 of actual cell size)

P1306

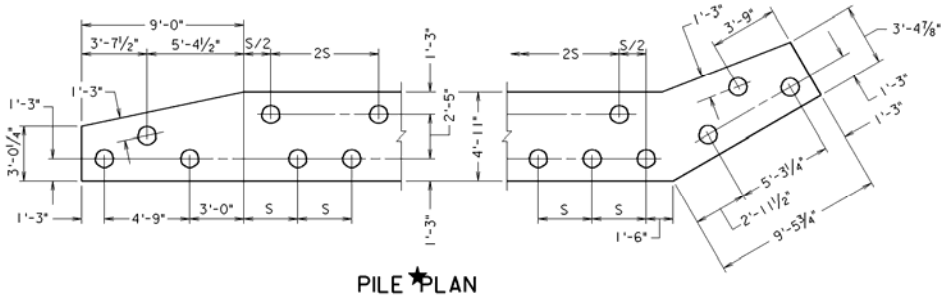

Abutment on Piles Pile Plan
30° Skew – Fill Slope 1 ½ : 1 - H = 6'
S = 3'-0" to 3'-6"
(approx. 0.40 of actual cell size)

CELL	CELL NAME	CELL DESCRIPTION

P1307

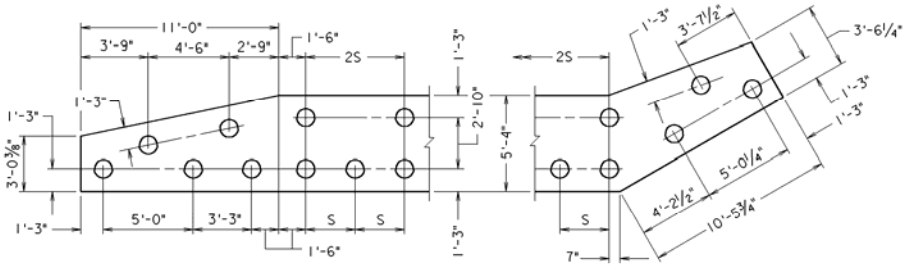

PILE PLAN

Abutment on Piles Pile Plan
30° Skew – Fill Slope 1 ½ : 1 - H = 7'
S = 2'-9" to 3'-3"
(approx. 0.40 of actual cell size)

P1308

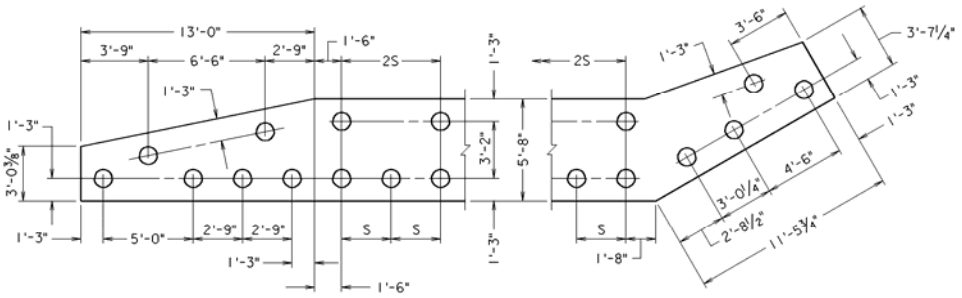

PILE PLAN

Abutment on Piles Pile Plan
30° Skew – Fill Slope 1 ½ : 1 - H = 8'
S = 2'-9" to 3'-0"
(approx. 0.40 of actual cell size)

CELL	CELL NAME	CELL DESCRIPTION

P1309

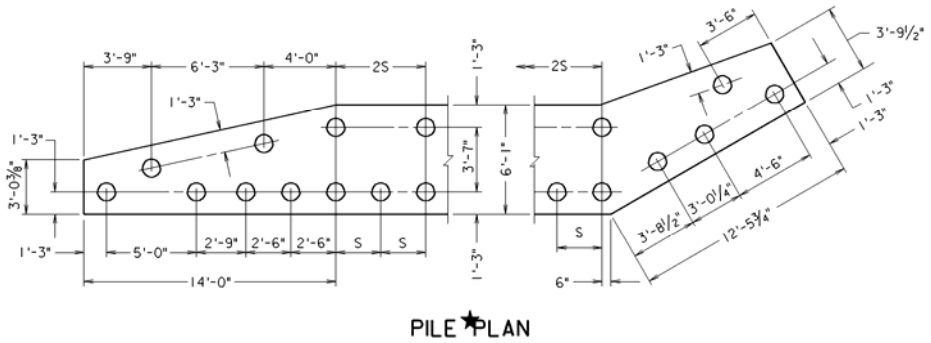

Abutment on Piles Pile Plan
30° Skew – Fill Slope 1 ½ : 1 - H = 9'
S = 2'-6" to 2'-9"
(approx. 0.40 of actual cell size)

P1310

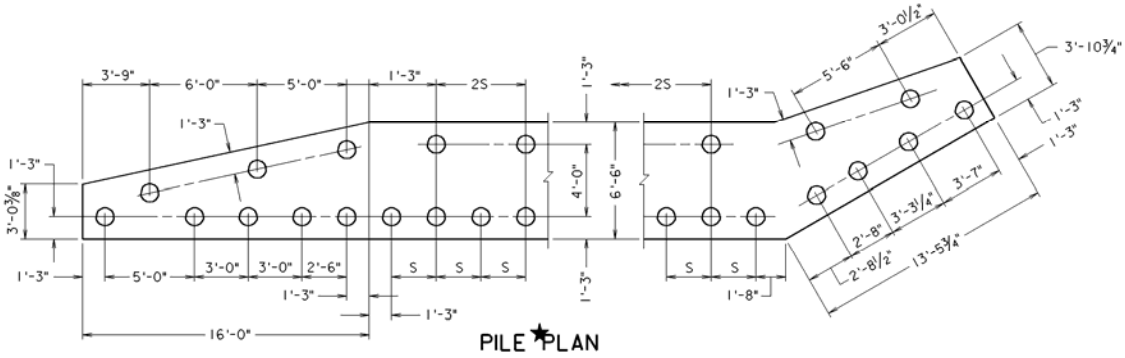

Abutment on Piles Pile Plan
30° Skew – Fill Slope 1 ½ : 1 - H = 10'
S = 2'-6" to 2'-8"
(approx. 0.40 of actual cell size)

CELL	CELL NAME	CELL DESCRIPTION

P1311

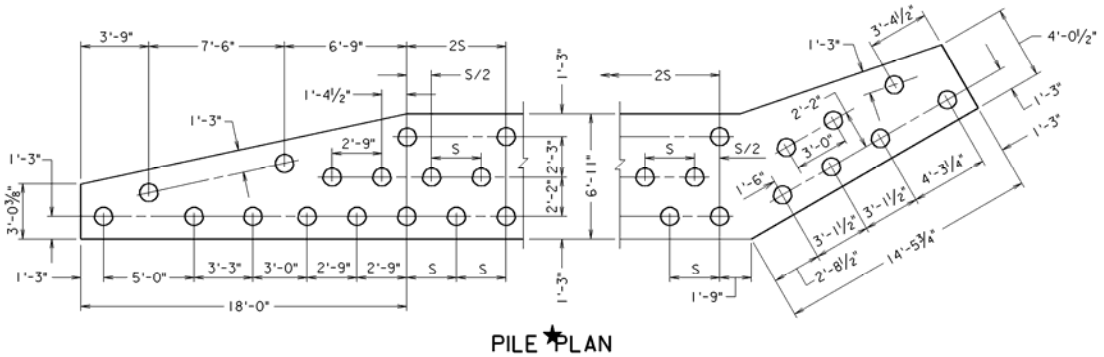

Abutment on Piles Pile Plan
30° Skew – Fill Slope 1 ½ : 1 - H = 11'
S = 2'-9" to 3'-0"
(approx. 0.40 of actual cell size)

P1312

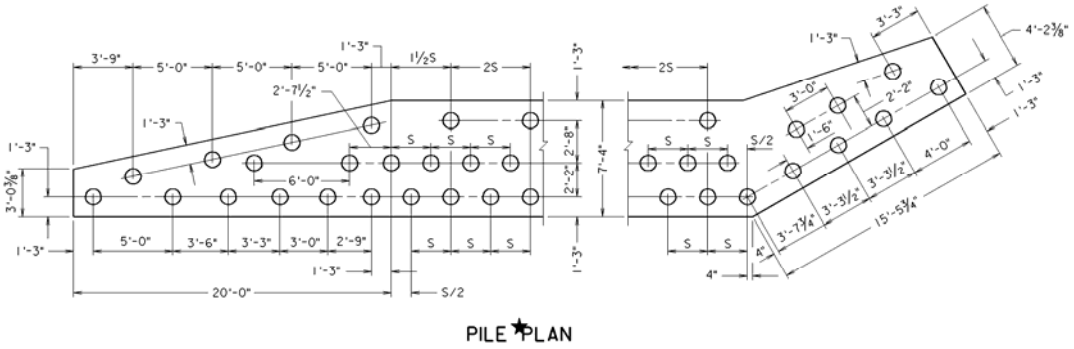

Abutment on Piles Pile Plan
30° Skew – Fill Slope 1 ½ : 1 - H = 12'
S = 2'-6" to 2'-9"
(approx. 0.35 of actual cell size)

CELL	CELL NAME	CELL DESCRIPTION

P1313

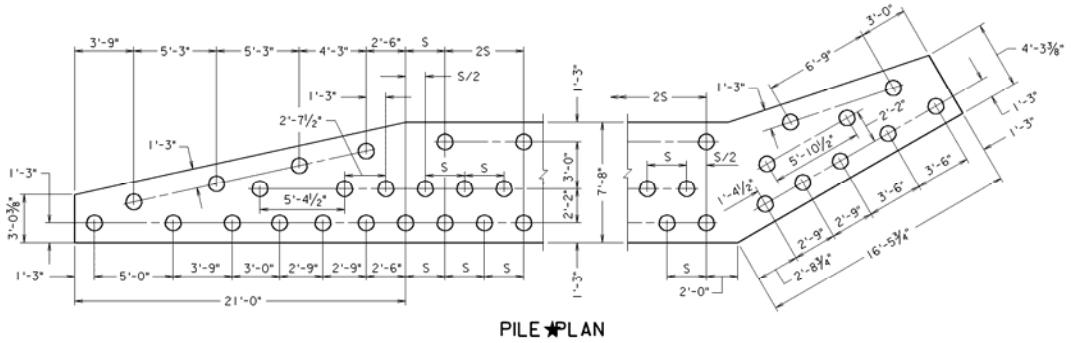

Abutment on Piles Pile Plan
30° Skew – Fill Slope 1 ½ : 1 - H = 13'
S = 2'-6" to 2'-9"
(approx. 0.35 of actual cell size)

P1314

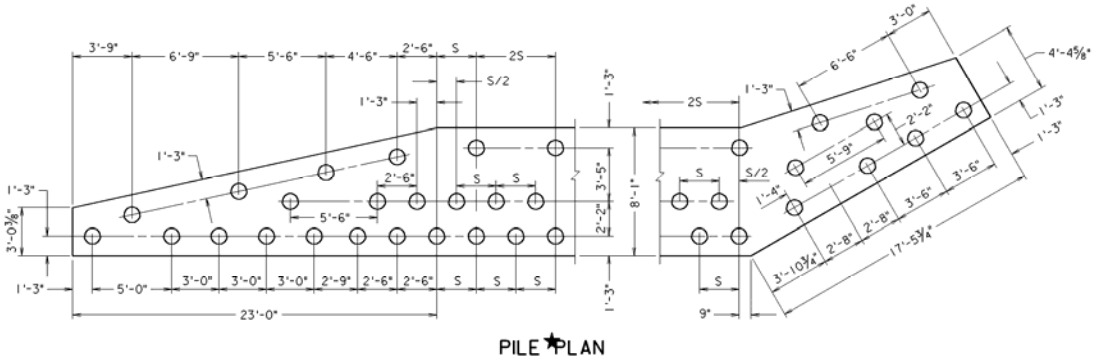

Abutment on Piles Pile Plan
30° Skew – Fill Slope 1 ½ : 1 - H = 14'
S = 2'-6" to 2'-8"
(approx. 0.35 of actual cell size)

CELL	CELL NAME	CELL DESCRIPTION

P1404

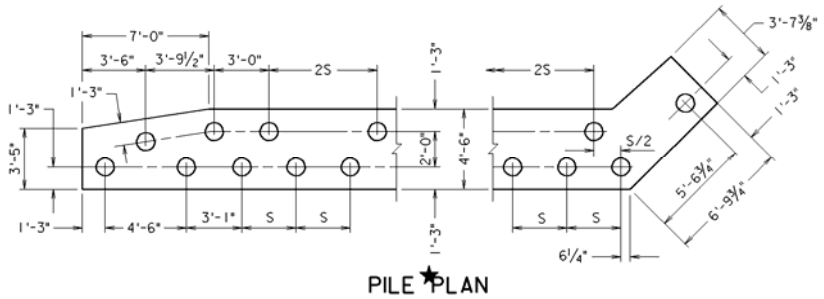

Abutment on Piles Pile Plan
45° Skew – Fill Slope 1 ½ : 1 - H = 4'
S = 3'-0" to 3'-6"
(approx. 0.40 of actual cell size)

P1405

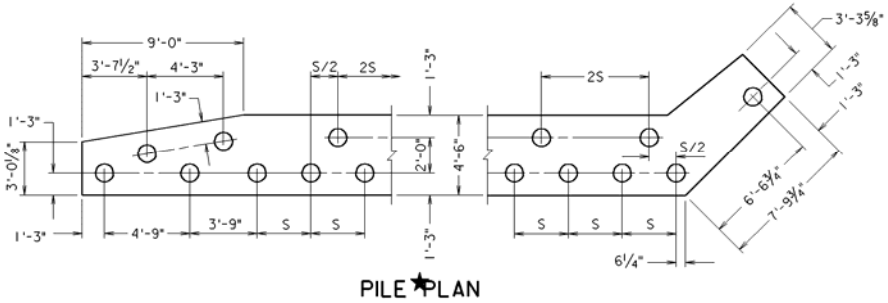

Abutment on Piles Pile Plan
45° Skew – Fill Slope 1 ½ : 1 - H = 5'
S = 3'-0" to 3'-6"
(approx. 0.40 of actual cell size)

CELL	CELL NAME	CELL DESCRIPTION

P1406

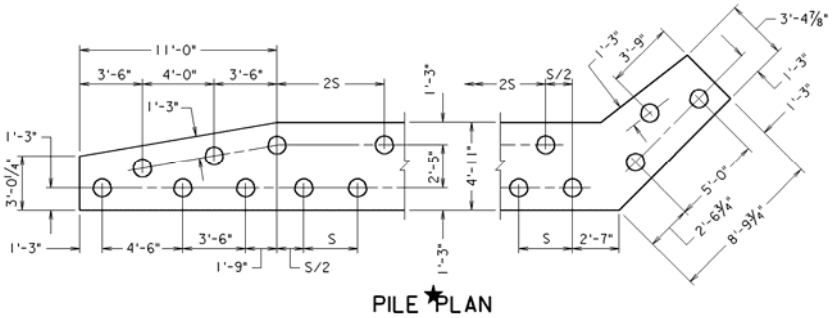

Abutment on Piles Pile Plan
45° Skew – Fill Slope 1 ½ : 1 - H = 6'
S = 3'-0" to 3'-6"
(approx. 0.40 of actual cell size)

P1407

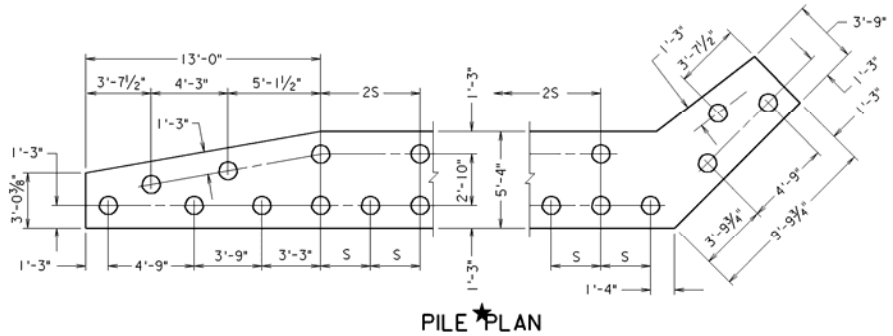

Abutment on Piles Pile Plan
45° Skew – Fill Slope 1 ½ : 1 - H = 7'
S = 2'-9" to 3'-3"
(approx. 0.40 of actual cell size)

CELL	CELL NAME	CELL DESCRIPTION

P1408

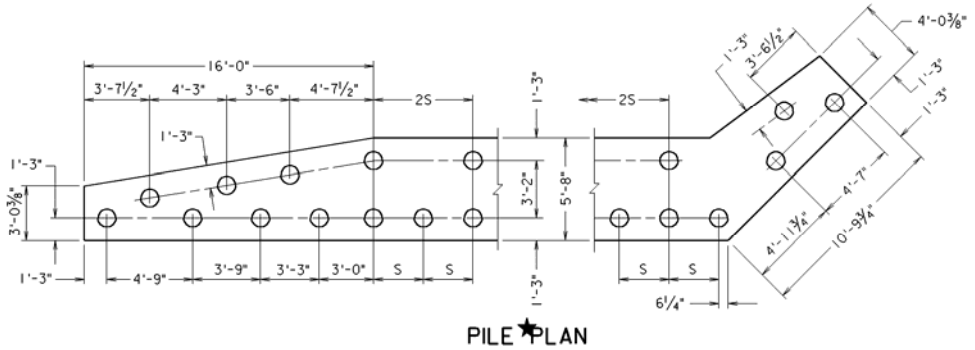

Abutment on Piles Pile Plan
45° Skew – Fill Slope 1 ½ : 1 - H = 8'
S = 2'-9" to 3'-0"
(approx. 0.40 of actual cell size)

P1409

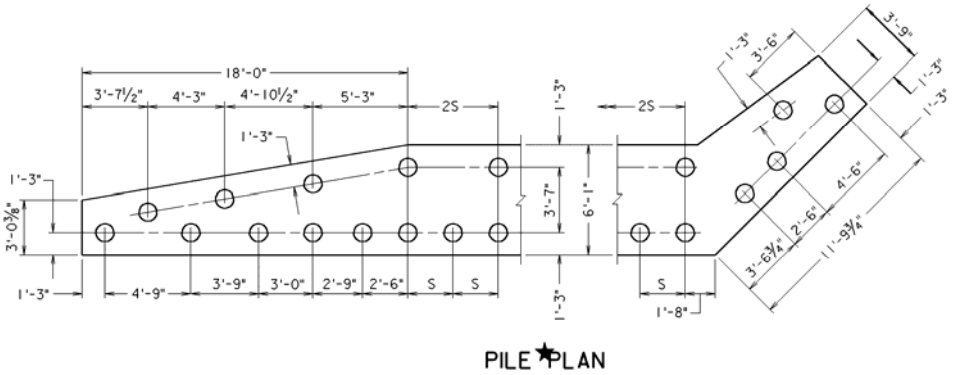

Abutment on Piles Pile Plan
45° Skew – Fill Slope 1 ½ : 1 - H = 9'
S = 2'-6" to 2'-9"
(approx. 0.40 of actual cell size)

CELL	CELL NAME	CELL DESCRIPTION

P1410

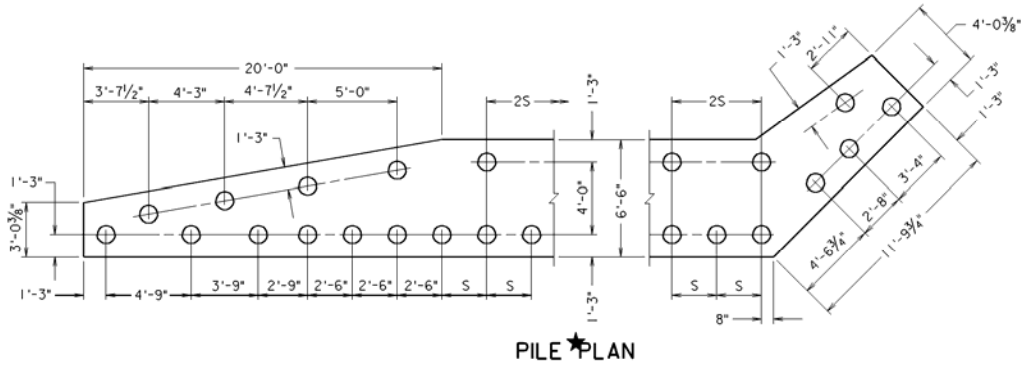

Abutment on Piles Pile Plan
45° Skew – Fill Slope 1 ½ : 1 - H = 10'
S = 2'-9" to 3'-0"
(approx. 0.40 of actual cell size)

P1411

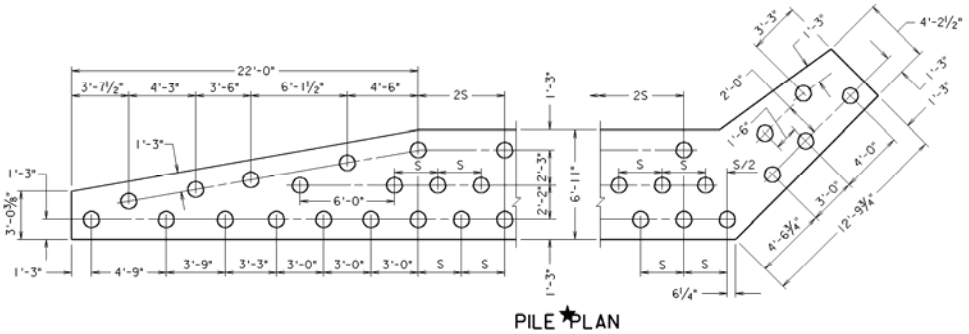

Abutment on Piles Pile Plan
45° Skew – Fill Slope 1 ½ : 1 - H = 11'
S = 2'-9" to 3'-0"
(approx. 0.35 of actual cell size)

CELL	CELL NAME	CELL DESCRIPTION

P1412

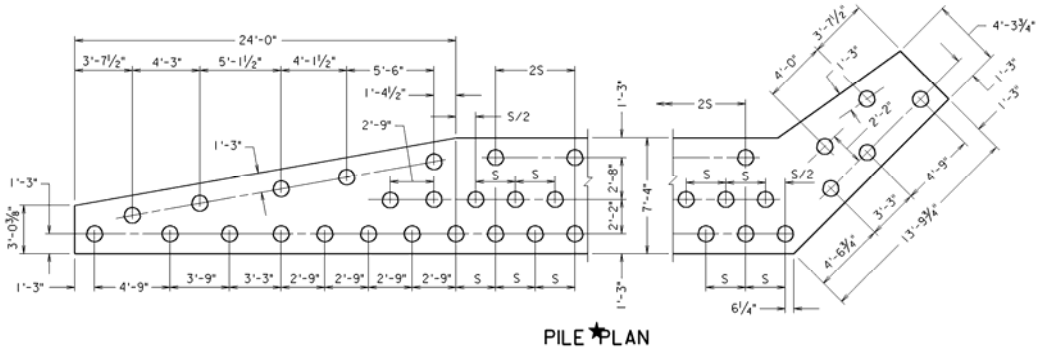

Abutment on Piles Pile Plan
45° Skew – Fill Slope 1 ½ : 1 - H = 12'
S = 2'-6" to 2'-9"
(approx. 0.35 of actual cell size)

P1413

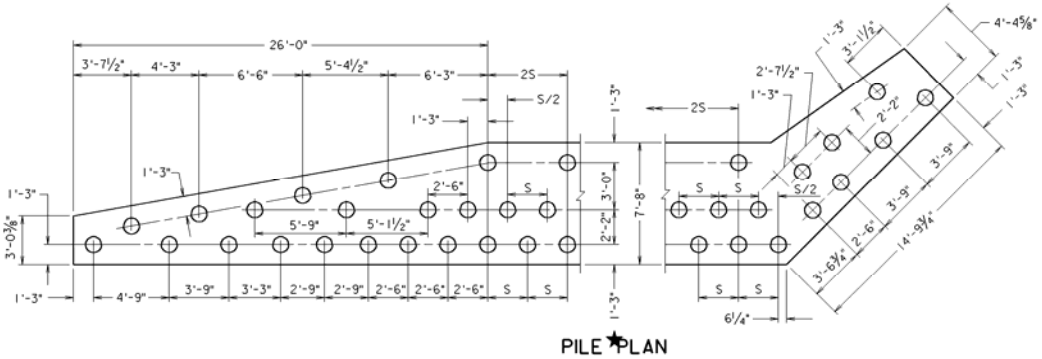

Abutment on Piles Pile Plan
45° Skew – Fill Slope 1 ½ : 1 - H = 13'
S = 2'-6" to 2'-9"
(approx. 0.35 of actual cell size)

CELL	CELL NAME	CELL DESCRIPTION

P1414

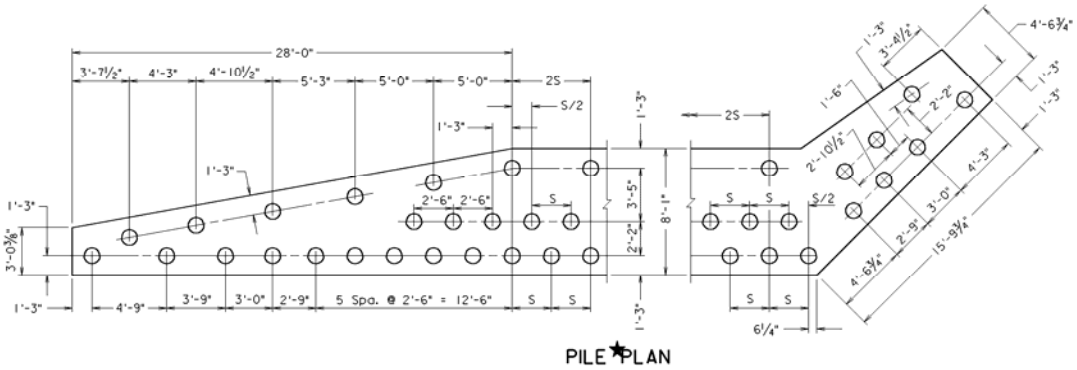

Abutment on Piles Pile Plan
45° Skew – Fill Slope 1 ½ : 1 - H = 14'
S = 2'-6" to 2'-8"
(approx. 0.35 of actual cell size)

P2004

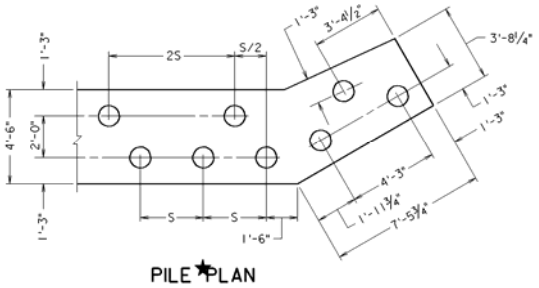

Abutment on Piles Pile Plan
0° Skew – Fill Slope 2 : 1 - H = 4'
S = 3'-0" to 3'-6"
(approx. 0.35 of actual cell size)

CELL	CELL NAME	CELL DESCRIPTION

P2005

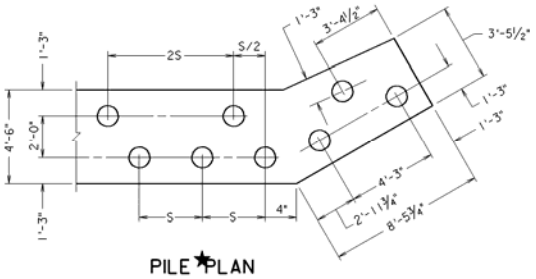

Abutment on Piles Pile Plan
0° Skew – Fill Slope 2 : 1 - H = 5'
S = 3'-0" to 3'-6"
(approx. 0.35 of actual cell size)

P2006

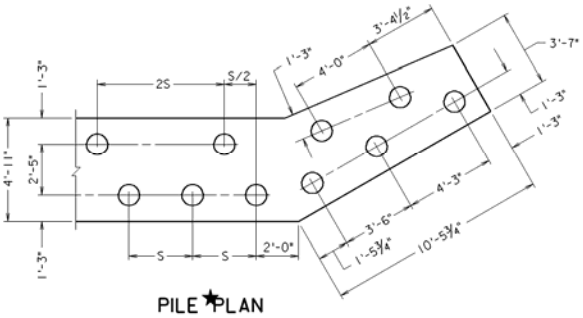

Abutment on Piles Pile Plan
0° Skew – Fill Slope 2 : 1 - H = 6'
S = 3'-0" to 3'-6"
(approx. 0.35 of actual cell size)

P2007

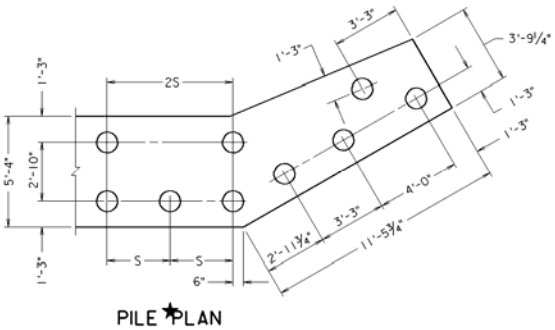

Abutment on Piles Pile Plan
0° Skew – Fill Slope 2 : 1 - H = 7'
S = 2'-9" to 3'-3"
(approx. 0.35 of actual cell size)

CELL	CELL NAME	CELL DESCRIPTION

P2008

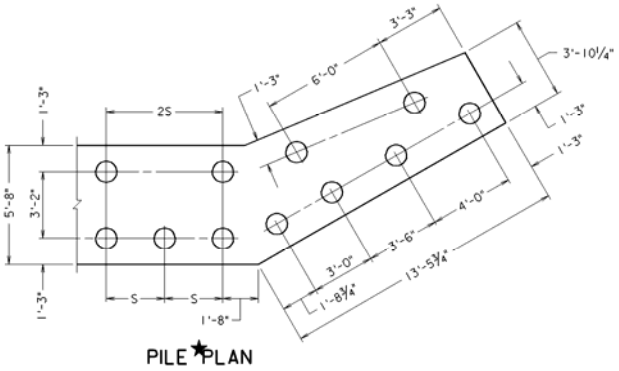

Abutment on Piles Pile Plan
0° Skew – Fill Slope 2 : 1 - H = 8'
S = 2'-9" to 3'-0"
(approx. 0.35 of actual cell size)

P2009

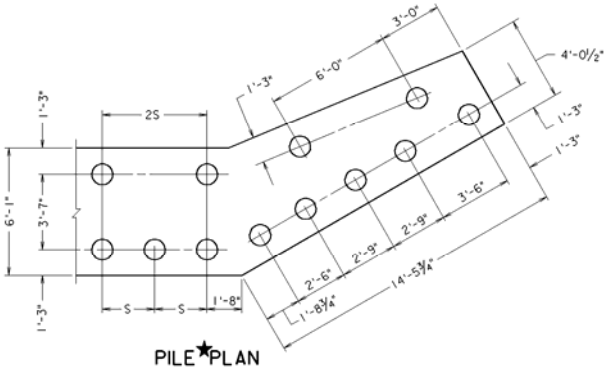

Abutment on Piles Pile Plan
0° Skew – Fill Slope 2 : 1 - H = 9'
S = 2'-6" to 2'-9"
(approx. 0.35 of actual cell size)

P2010

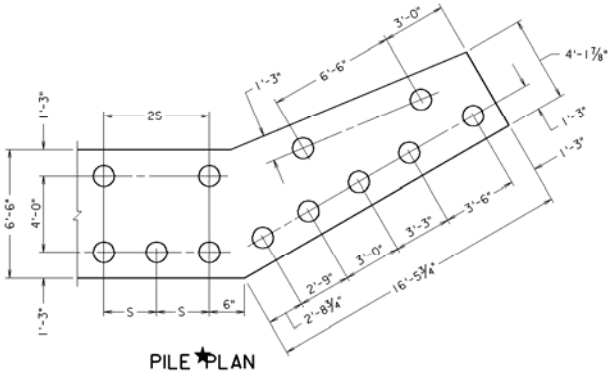

Abutment on Piles Pile Plan
0° Skew – Fill Slope 2 : 1 - H = 10'
S = 2'-6" to 2'-8"
(approx. 0.35 of actual cell size)

CELL	CELL NAME	CELL DESCRIPTION

P2011

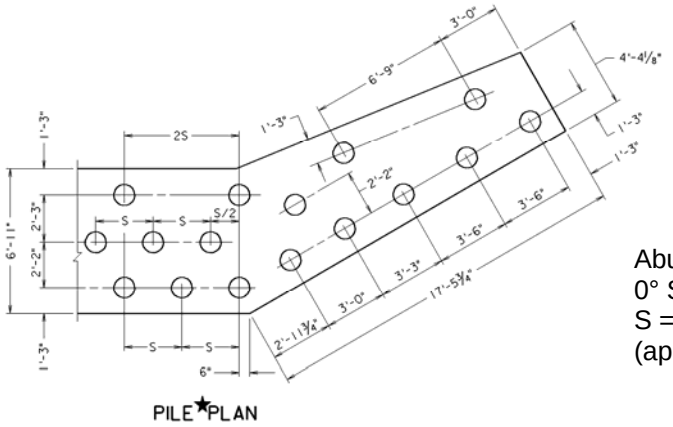

Abutment on Piles Pile Plan
0° Skew – Fill Slope 2 : 1 - H = 11'
S = 2'-9" to 3'-0"
(approx. 0.35 of actual cell size)

P2012

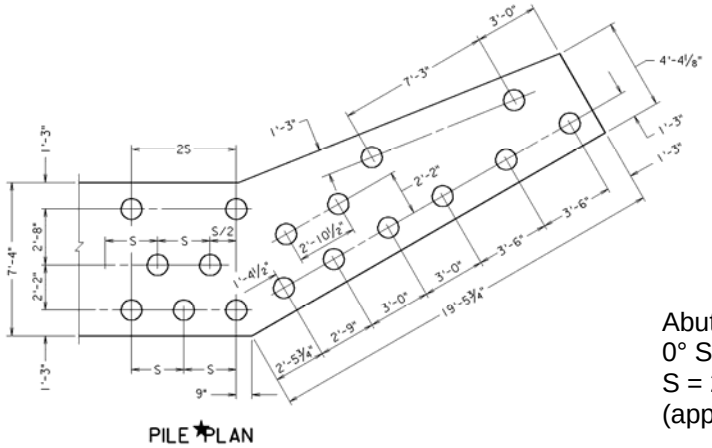

Abutment on Piles Pile Plan
0° Skew – Fill Slope 2 : 1 - H = 12'
S = 2'-6" to 2'-9"
(approx. 0.35 of actual cell size)

CELL	CELL NAME	CELL DESCRIPTION

P2013

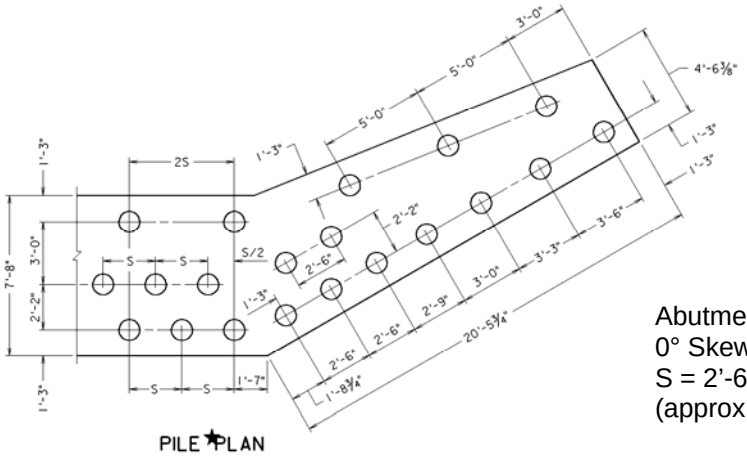

Abutment on Piles Pile Plan
0° Skew – Fill Slope 2 : 1 - H = 13'
S = 2'-6" to 2'-9"
(approx. 0.35 of actual cell size)

P2014

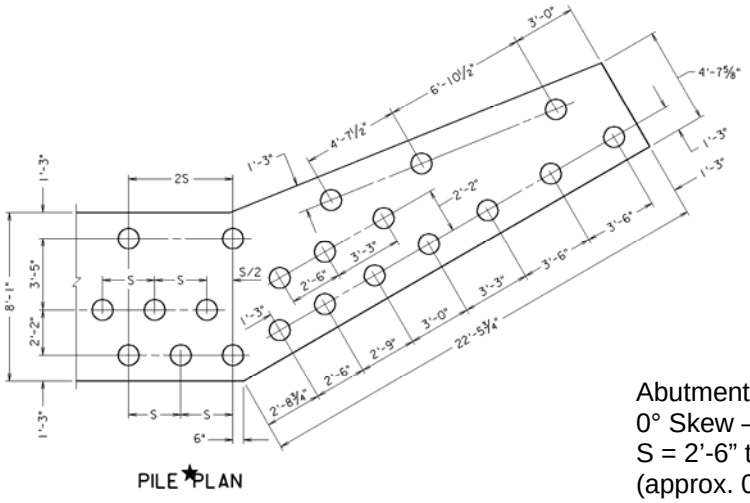

Abutment on Piles Pile Plan
0° Skew – Fill Slope 2 : 1 - H = 14'
S = 2'-6" to 2'-8"
(approx. 0.35 of actual cell size)

CELL	CELL NAME	CELL DESCRIPTION

P2304

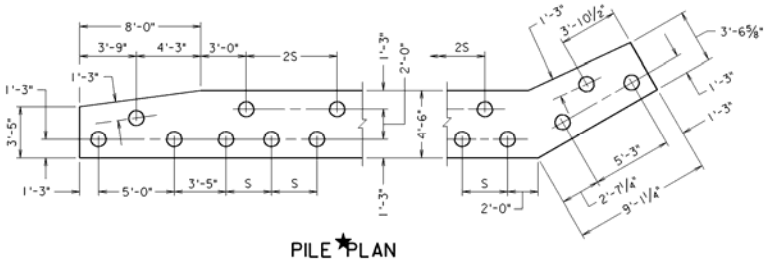

Abutment on Piles Pile Plan
30° Skew – Fill Slope 2 : 1 - H = 4'
S = 3'-0" to 3'-6"
(approx. 0.35 of actual cell size)

P2305

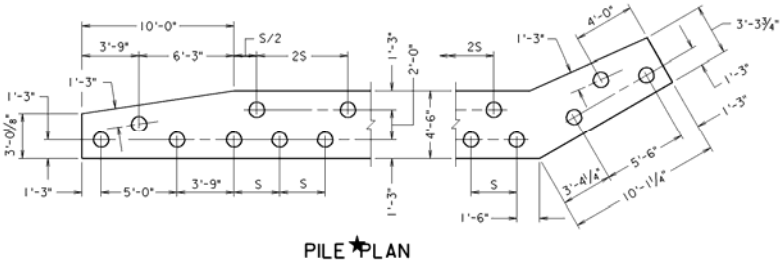

Abutment on Piles Pile Plan
30° Skew – Fill Slope 2 : 1 - H = 5'
S = 3'-0" to 3'-6"
(approx. 0.35 of actual cell size)

CELL	CELL NAME	CELL DESCRIPTION

P2306

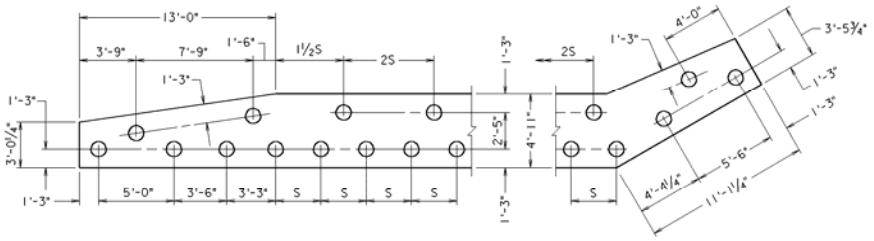

PILE PLAN

Abutment on Piles Pile Plan
30° Skew – Fill Slope 2 : 1 - H = 6'
S = 3'-0" to 3'-6"
(approx. 0.35 of actual cell size)

P2307

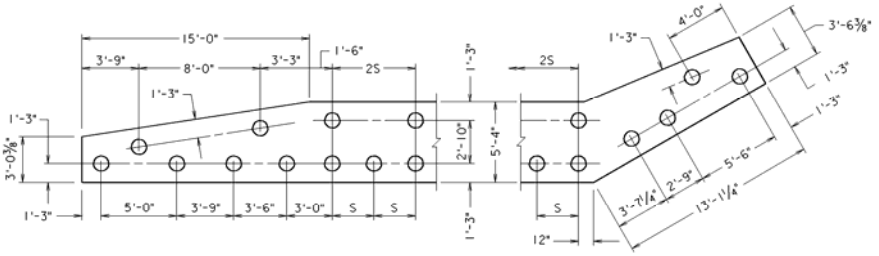

PILE PLAN

Abutment on Piles Pile Plan
30° Skew – Fill Slope 2 : 1 - H = 7'
S = 2'-9" to 3'-3"
(approx. 0.35 of actual cell size)

CELL	CELL NAME	CELL DESCRIPTION

P2308

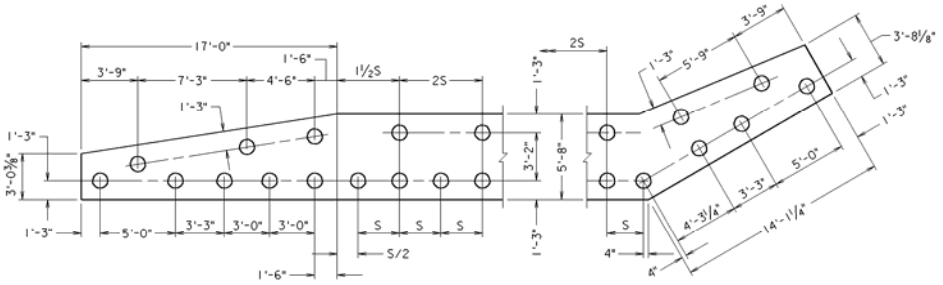

Abutment on Piles Pile Plan
30° Skew – Fill Slope 2 : 1 - H = 8'
S = 2'-9" to 3'-0"
(approx. 0.35 of actual cell size)

P2309

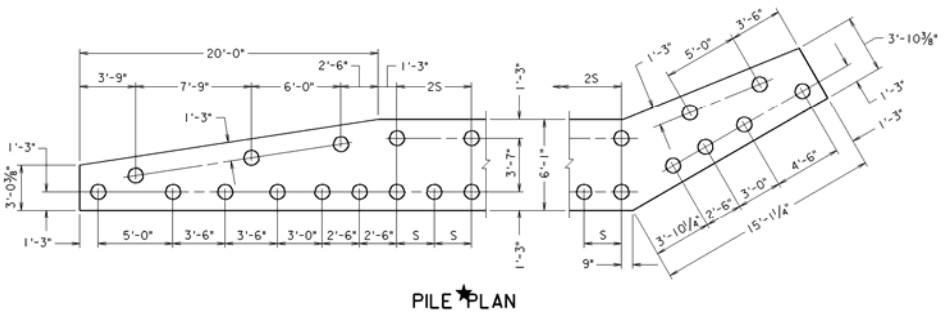

Abutment on Piles Pile Plan
30° Skew – Fill Slope 2 : 1 - H = 9'
S = 2'-6" to 2'-9"
(approx. 0.35 of actual cell size)

CELL	CELL NAME	CELL DESCRIPTION

P2310

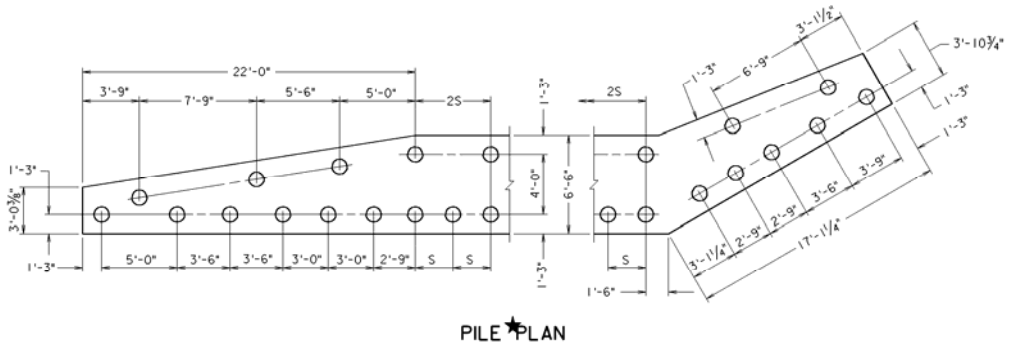

Abutment on Piles Pile Plan
30° Skew – Fill Slope 2 : 1 - H = 10'
S = 2'-6" to 2'-8"
(approx. 0.35 of actual cell size)

P2311

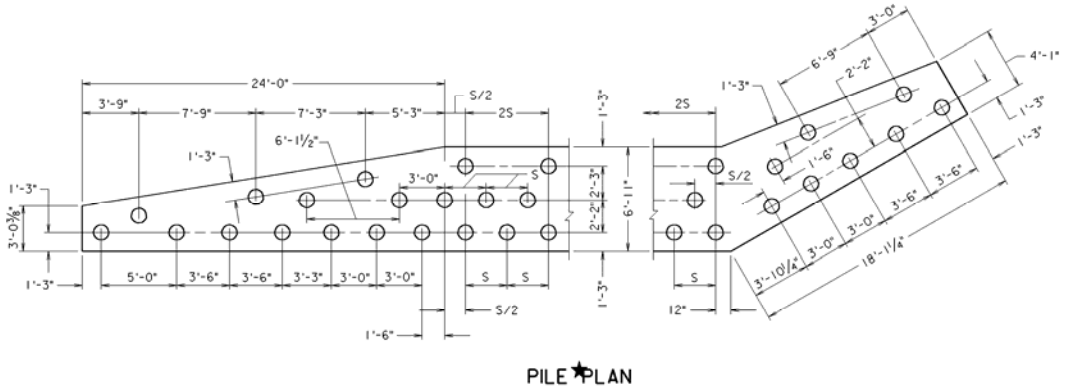

Abutment on Piles Pile Plan
30° Skew – Fill Slope 2 : 1 - H = 11'
S = 2'-9" to 3'-0"
(approx. 0.35 of actual cell size)

CELL	CELL NAME	CELL DESCRIPTION

P2312

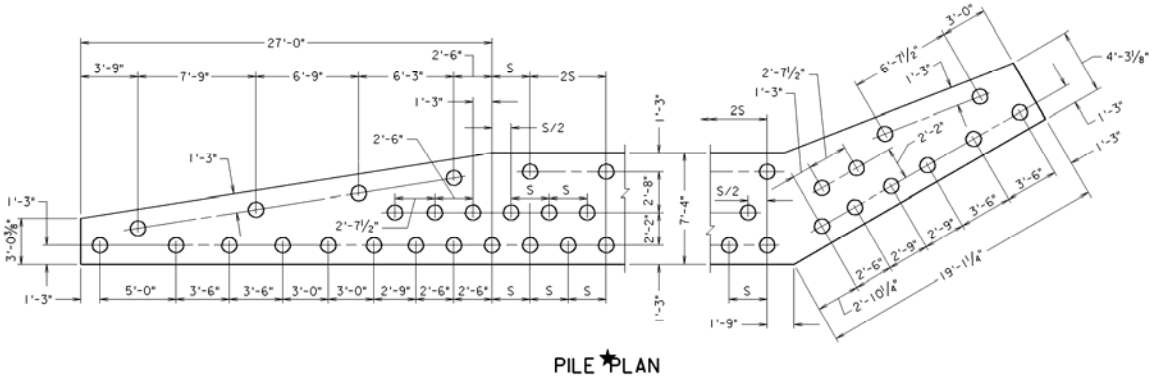

Abutment on Piles Pile Plan
30° Skew – Fill Slope 2 : 1 - H = 12'
S = 2'-6" to 2'-9"
(approx. 0.35 of actual cell size)

P2313

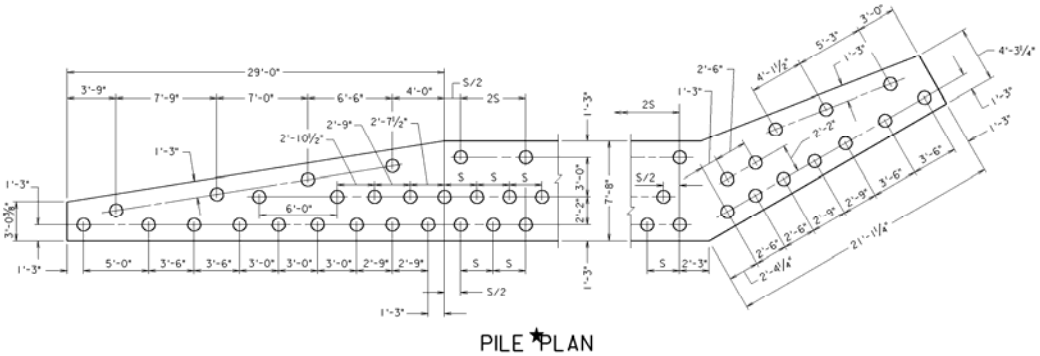

Abutment on Piles Pile Plan
30° Skew – Fill Slope 2 : 1 - H = 13'
S = 2'-6" to 2'-9"
(approx. 0.30 of actual cell size)

CELL	CELL NAME	CELL DESCRIPTION

P2314

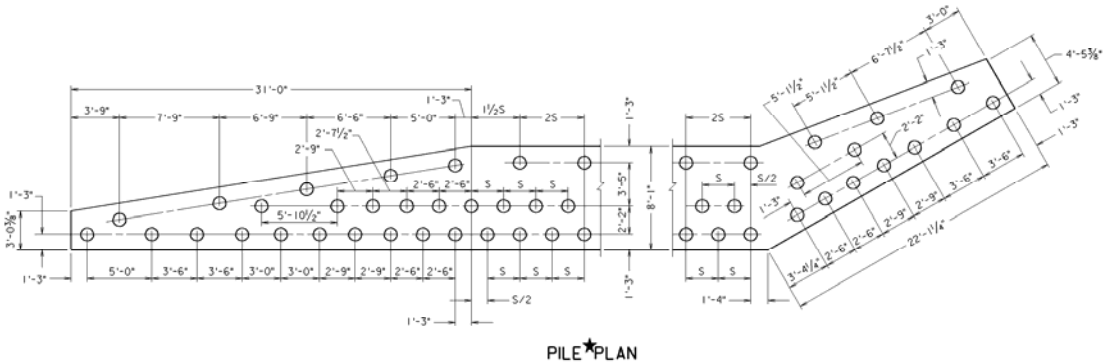

Abutment on Piles Pile Plan
30° Skew – Fill Slope 2 : 1 - H = 14’
S = 2’-6” to 2’-8”
(approx. 0.30 of actual cell size)

P2404

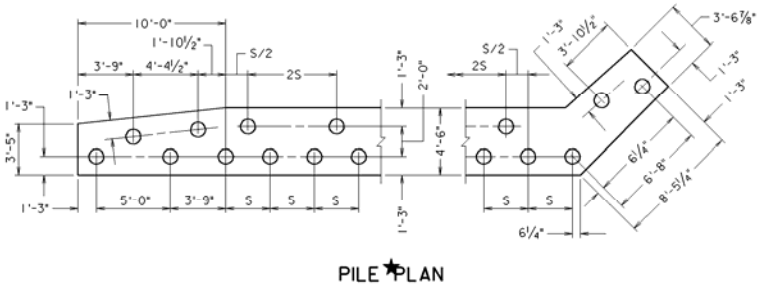

Abutment on Piles Pile Plan
45° Skew – Fill Slope 2 : 1 - H = 4’
S 3’-0” to 3’-6”
(approx. 0.35 of actual cell size)

CELL	CELL NAME	CELL DESCRIPTION

P2405

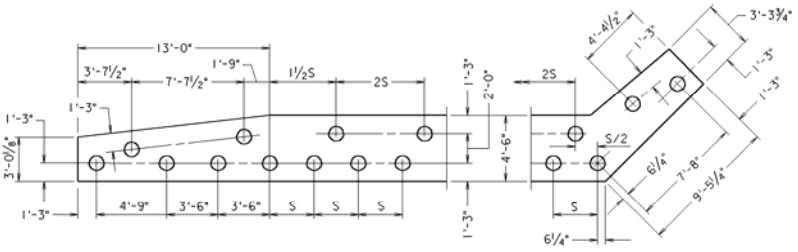

PILE PLAN

Abutment on Piles Pile Plan
45° Skew – Fill Slope 2 : 1 - H = 5'
S = 3'-0" to 3'-6"
(approx. 0.35 of actual cell size)

P2406

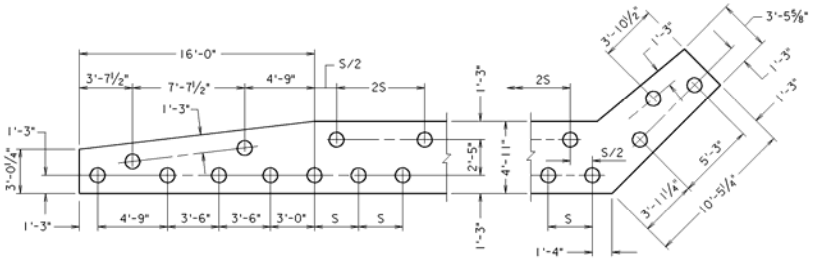

PILE PLAN

Abutment on Piles Pile Plan
45° Skew – Fill Slope 2 : 1 - H = 6'
S = 3'-0" to 3'-6"
(approx. 0.35 of actual cell size)

CELL	CELL NAME	CELL DESCRIPTION

P2407

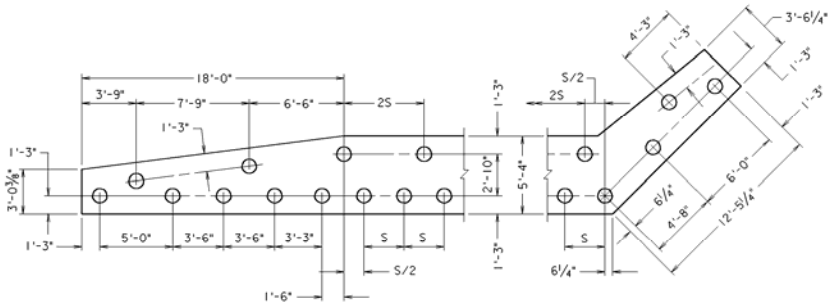

PILE PLAN

Abutment on Piles Pile Plan
45° Skew – Fill Slope 2 : 1 - H = 7'
S = 2'-9" to 3'-3"
(approx. 0.35 of actual cell size)

P2408

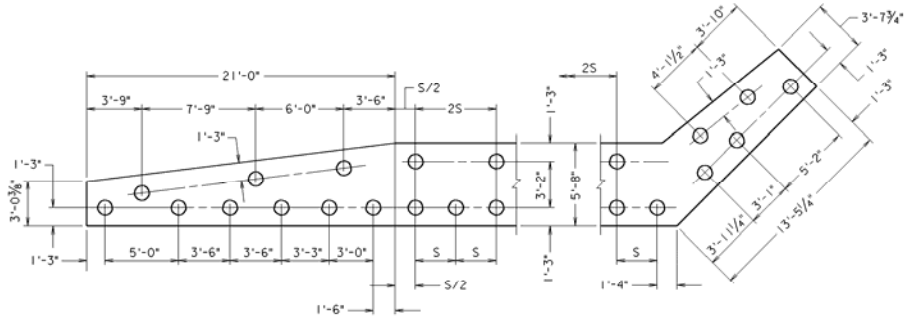

PILE PLAN

Abutment on Piles Pile Plan
45° Skew – Fill Slope 2 : 1 - H = 8'
S = 2'-9" to 3'-0"
(approx. 0.35 of actual cell size)

CELL	CELL NAME	CELL DESCRIPTION

P2409

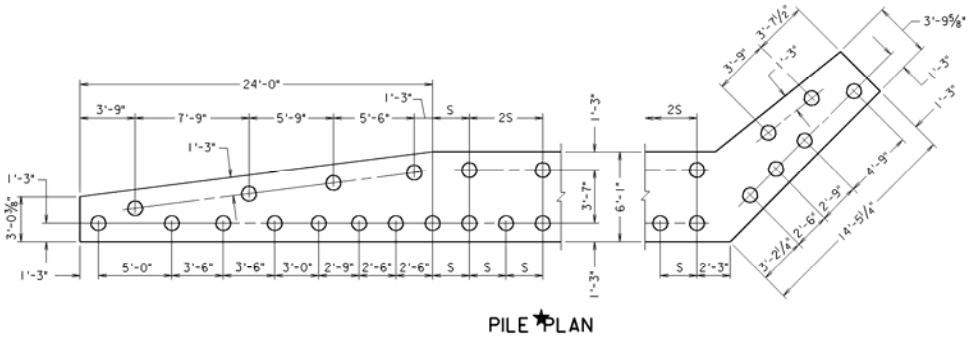

Abutment on Piles Pile Plan
45° Skew – Fill Slope 2 : 1 - H = 9'
S = 2'-6" to 2'-9"
(approx. 0.35 of actual cell size)

P2410

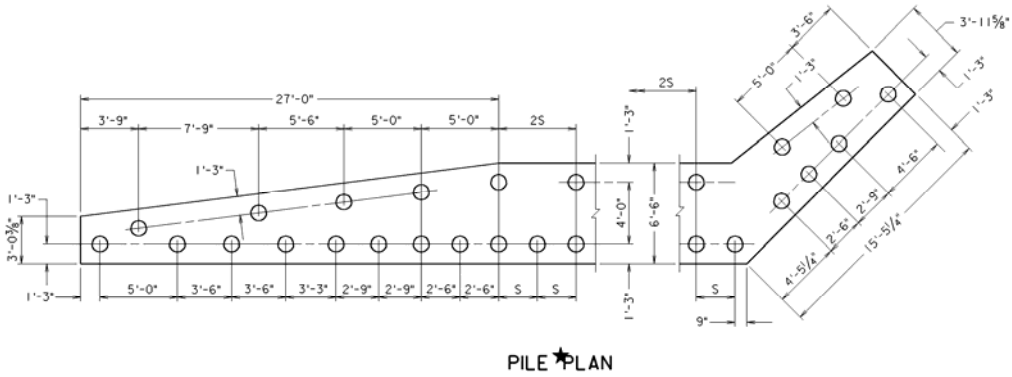

Abutment on Piles Pile Plan
45° Skew – Fill Slope 2 : 1 - H = 10'
S = 2'-6" to 2'-8"
(approx. 0.35 of actual cell size)

CELL	CELL NAME	CELL DESCRIPTION

P2411

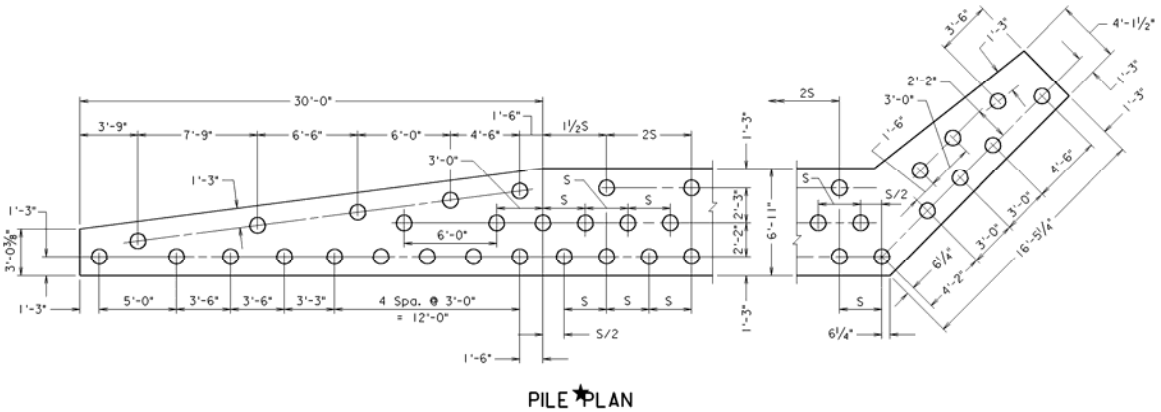

Abutment on Piles Pile Plan
45° Skew – Fill Slope 2 : 1 - H = 11'
S = 2'-9" to 3'-0"
(approx. 0.35 of actual cell size)

P2412

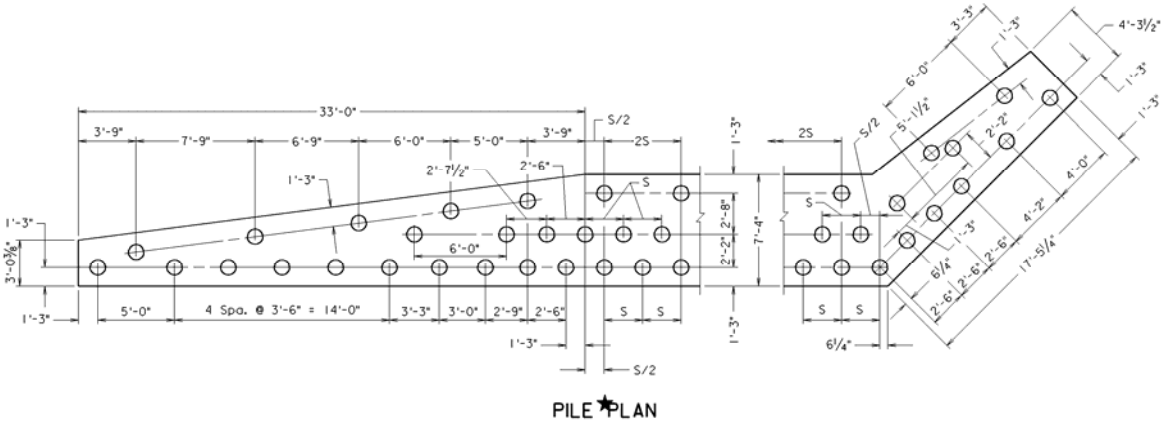

Abutment on Piles Pile Plan
45° Skew – Fill Slope 2 : 1 - H = 12'
S = 2'-6" to 2'-9"
(approx. 0.35 of actual cell size)

CELL	CELL NAME	CELL DESCRIPTION

P2413

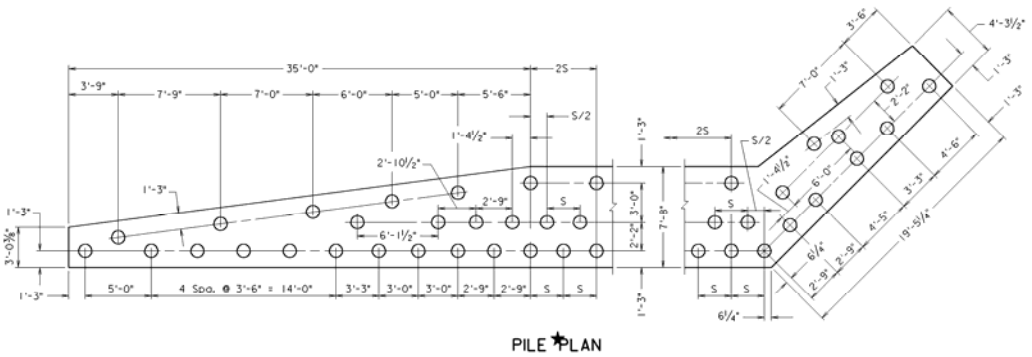

Abutment on Piles Pile Plan
45° Skew – Fill Slope 2 : 1 - H = 13'
S = 2'-6" to 2'-9"
(approx. 0.30 of actual cell size)

P2414

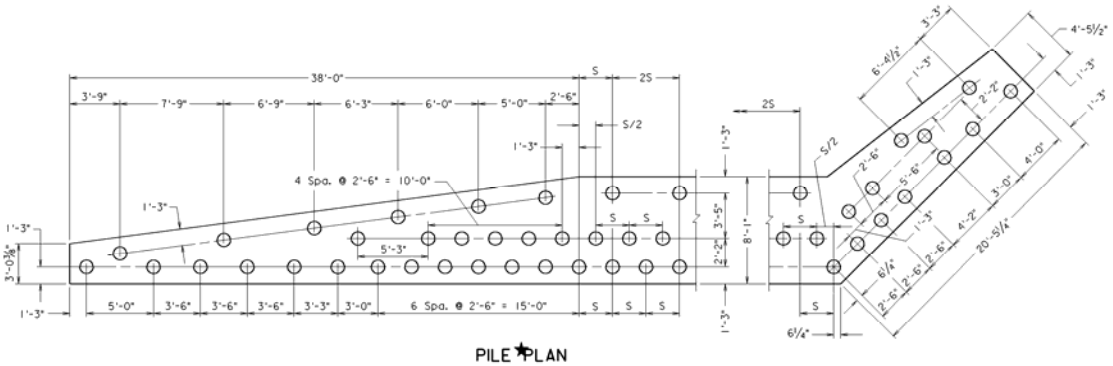

Abutment on Piles Pile Plan
45° Skew – Fill Slope 2 : 1 - H = 14'
S = 2'-6" to 2'-8"
(approx. 0.30 of actual cell size)

CELL	CELL NAME	CELL DESCRIPTION

PL0

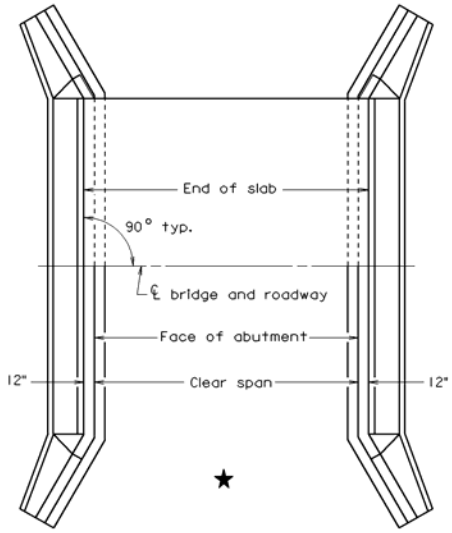

Plan View 0° skew
(approx. 0.40 of actual cell size)

PL30L

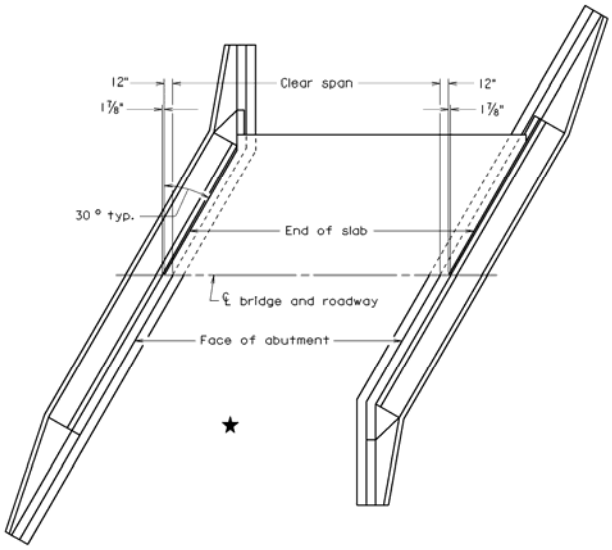

Plan View 30° skew
Left Hand (Left Side Forward)
(approx. 0.35 of actual cell size)

CELL	CELL NAME	CELL DESCRIPTION

PL30R

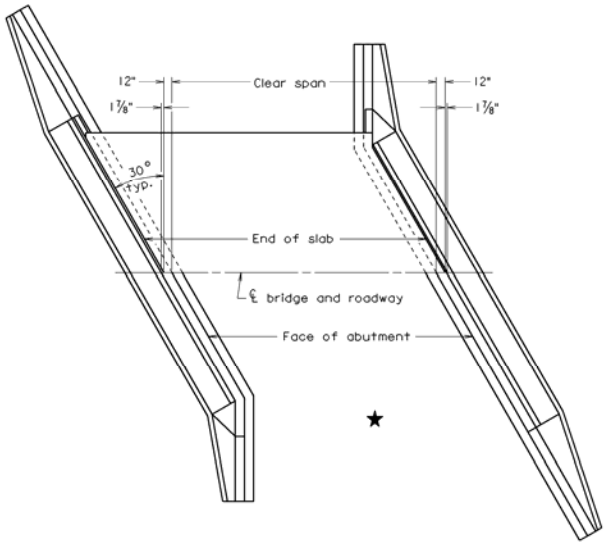

Plan View 30° skew
Right Hand (Right Side Forward)
(approx. 0.35 of actual cell size)

PL45L

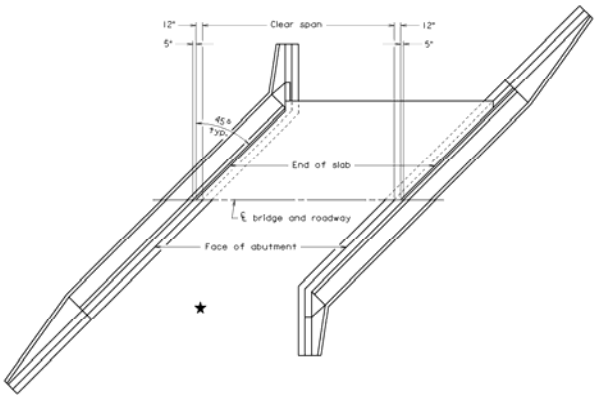

Plan View 45° skew
Left Hand (Left Side Forward)
(approx. 0.25 of actual cell size)

CELL	CELL NAME	CELL DESCRIPTION

PL45R

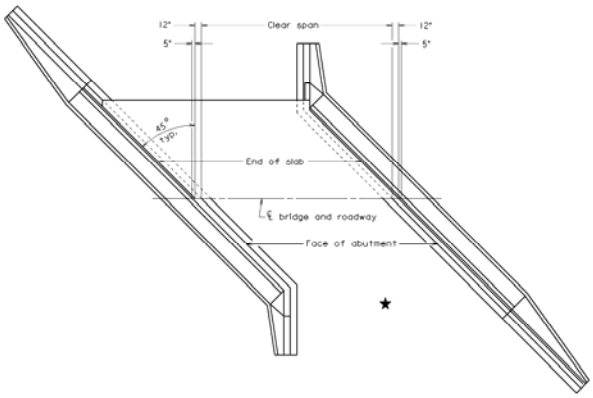

Plan View 45° skew
Right Hand (Right Side Forward)
(approx. 0.25 of actual cell size)

PP01

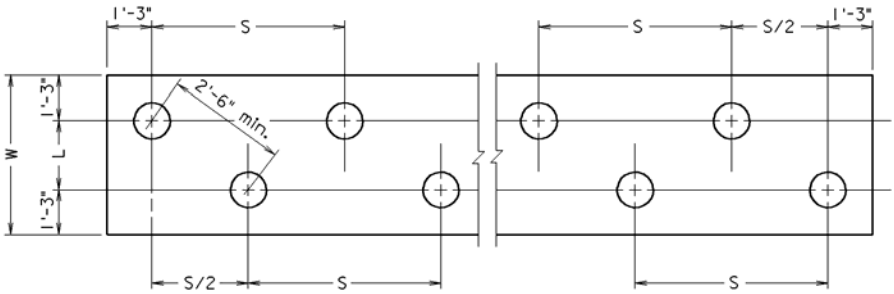

PILE PLAN

Pier Pile Plan
H = 4'-0" to 11'-0"
(approx. 0.50 of actual cell size)

CELL	CELL NAME	CELL DESCRIPTION

PP02

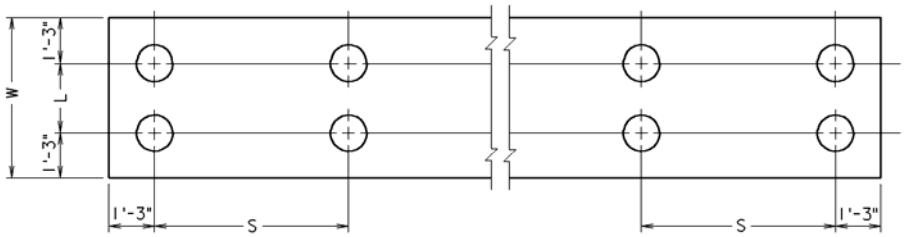

PILE PLAN

Pier Pile Plan
H = 12'-0" to 13'-0"
(approx. 0.50 of actual cell size)

PT1

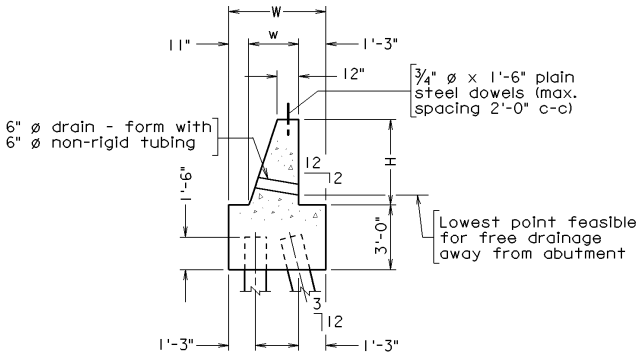

TYPICAL SECTION ON ℄

Abutment on Piles Typical Section
H = 4'-0"
No approach slab
(approx. 0.45 of actual cell size)

CELL	CELL NAME	CELL DESCRIPTION

PT1A

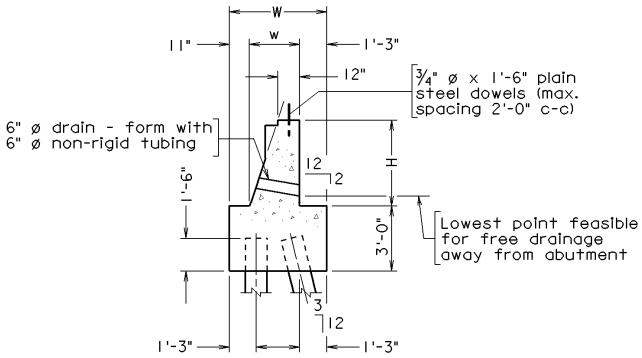

TYPICAL SECTION ON ℄

Abutment on Piles Typical Section
H = 4'-0"
With approach slab
(approx. 0.45 of actual cell size)

PT2

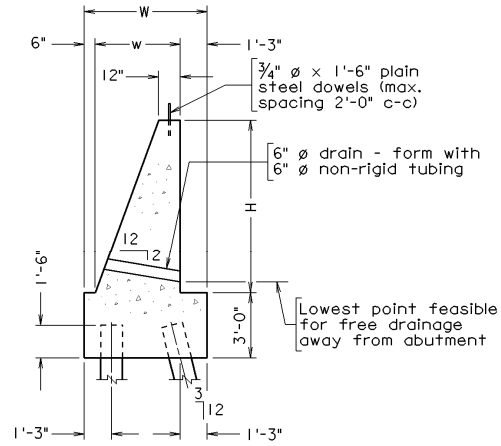

TYPICAL SECTION ON ℄

Abutment on Piles Typical Section
H = 5'-0" to 10'-0"
No approach slab
(approx. 0.45 of actual cell size)

CELL	CELL NAME	CELL DESCRIPTION

PT2A

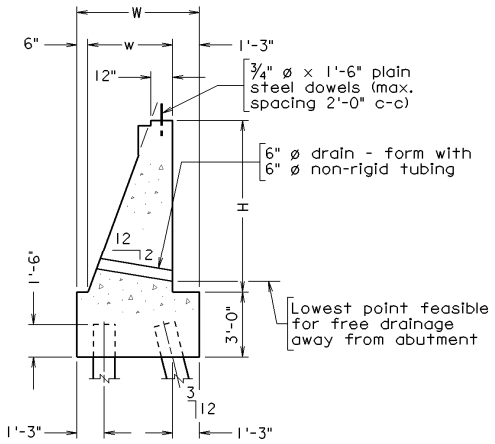

TYPICAL SECTION ON ℄

Abutment on Piles Typical Section
H = 5'-0" to 10'-0"
With approach slab
(approx. 0.45 of actual cell size)

PT3

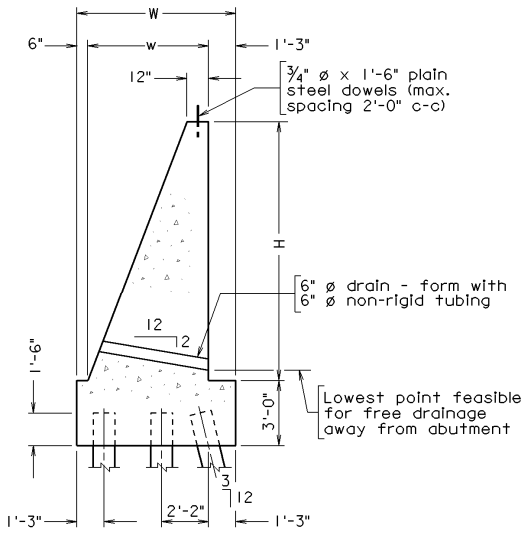

TYPICAL SECTION ON ℄

Abutment on Piles Typical Section
H = 11'-0" to 14'-0"
No Approach slab
(approx. 0.45 of actual cell size)

CELL	CELL NAME	CELL DESCRIPTION

PT3A

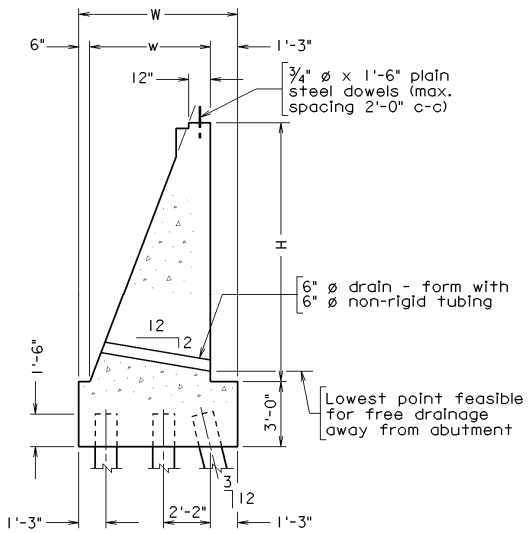

TYPICAL SECTION ON ℄

Abutment on Piles Typical Section
H = 11'-0" to 14'-0"
With Approach slab
(approx. 0.45 of actual cell size)

PT4

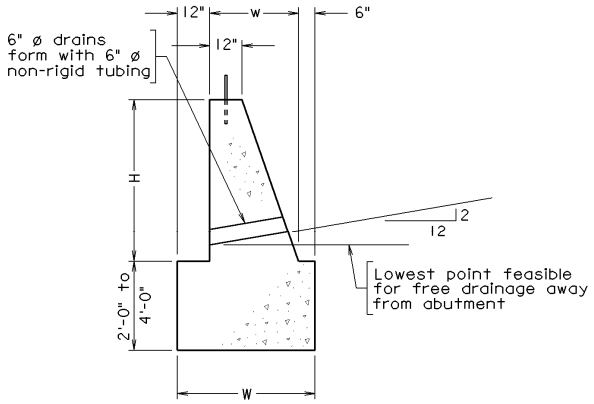

SECTION ON ℄

Abutment on Spread Footing
No approach slab
(approx. 0.45 of actual cell size)

CELL	CELL NAME	CELL DESCRIPTION
	PT4A	

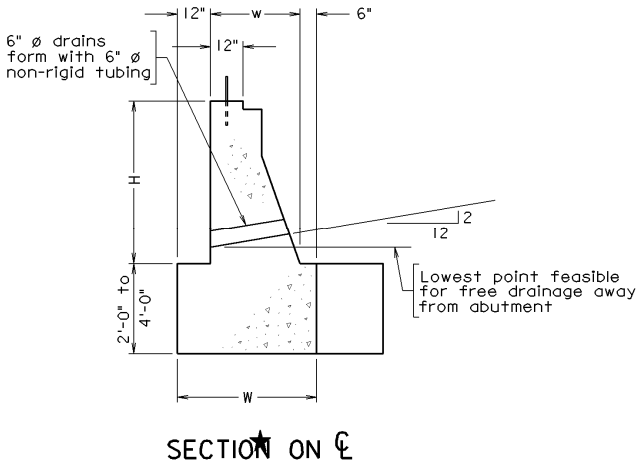

Abutment on Spread Footing
With approach slab
(approx. 0.45 of actual cell size)