VOLUME V – PART 3

CURRENT DETAILS

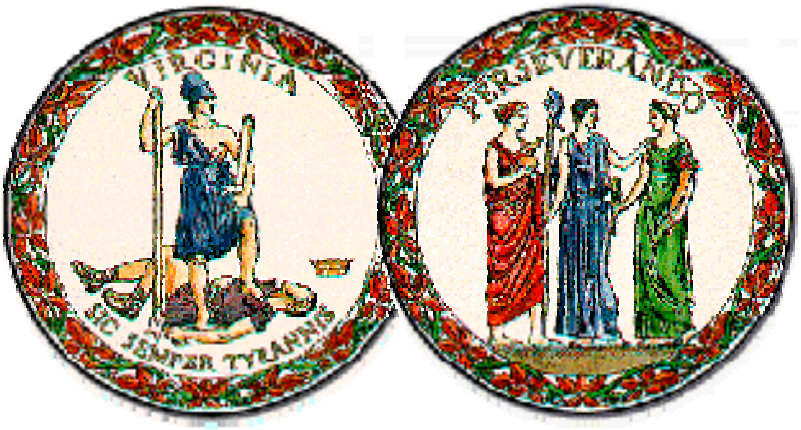

VIRGINIA DEPARTMENT OF TRANSPORTATION

COMMONWEALTH of VIRGINIA

DEPARTMENT OF TRANSPORTATION
1401 EAST BROAD STREET
RICHMOND, 23219-2000

Gregory A. Whirley
COMMISSIONER

May 3, 2013

SUBJECT: Manual of the Structure and Bridge Division
Volume V – Part 3
Current Details (Standards)

MEMORANDUM

TO: Holders of Volume V – Part 3: Current Details (Standards)

The approach slab standards are revised due to concerns by bridge contractors as to grooving requirements for approach slabs (at grade, with asphalt overlay or buried) and whether the grooving should be in accordance with the VDOT *Road and Bridge Specifications*, Section 316 or Section 404. For simplicity, the standards are revised rather than the specifications. The payment for grooving on the approach slabs was previously addressed in the July 9, 2012 revision to the Manual of the Structure and Bridge Division, Volume V – Part 2, Chapter 3: Estimates quantities tables for superstructure. The note is added on the standard sheets for the Contractor's information.

VOIDED:

None

NEW ISSUES:

None

REVISIONS:

File Number	Description of change(s)
TOC-1 thru -4	Revised date of sheets.

BAS-11 thru 20AR Added note for grooving requirements and quantities.

RETAIN THIS MEMO IN FRONT OF INDEX TO VOLUME V – PART 3

/original signed/
Julius F. J. Völgyi, Jr., P.E.
Assistant State Structure and Bridge Engineer

For: Kendal R. Walus, P.E.
State Structure and Bridge Engineer

COMMONWEALTH of VIRGINIA

DEPARTMENT OF TRANSPORTATION
1401 EAST BROAD STREET
RICHMOND, 23219-2000

Gregory A. Whirley
COMMISSIONER

March 27, 2013

SUBJECT: Manual of the Structure and Bridge Division
Volume V – Part 3
Current Details (Standards)

MEMORANDUM

TO: Holders of Volume V – Part 3: Current Details (Standards)

VOIDED:

File Number	Description of change(s)
BCF-1-1and BCF-1-2,	Contents of standard divided over two sheets.
BCF-2-1and BCF-2-2	Standard and notes deleted. General details for curved girder bridge cross frames are shown in Volume V – Part 2, Chapter 11.

NEW ISSUES:

File Number	Description of change(s)
BCF-4-1and BCF-5-1	Replaced BCF-1-1
BCF-4-2 and BCF-5-2	Notes to Designer for standard sheets.

REVISIONS:

TOC-1 and 2	Revised applicable names and dates.

RETAIN THIS MEMO IN FRONT OF INDEX TO VOLUME V – PART 3

/original signed/
Julius F. J. Völgyi, Jr., P.E.
Assistant State Structure and Bridge Engineer

For: Kendal R. Walus, P.E.
State Structure and Bridge Engineer

COMMONWEALTH of VIRGINIA

DEPARTMENT OF TRANSPORTATION
1401 EAST BROAD STREET
RICHMOND, 23219-2000

Gregory A. Whirley
COMMISSIONER

December 14, 2012

SUBJECT: Manual of the Structure and Bridge Division
Volume V – Part 3
Current Details (Standards)

MEMORANDUM

TO: Holders of Volume V – Part 3: Current Details (Standards)

VOIDED:

None

NEW ISSUES:

File Number	Description of change(s)
BPPS-1-1, BPPS-2-1, and BPPS-3-1	Added Pier Protection System standards. Supplemental information has been added to Manual of the Structure and Bridge Division, Volume V – Part 2, Chapter 15.
BPPS-1-2, BPPS-1-3, BPPS-2-2, BPPS-3-2, and BPPS-3-3	Notes to Designer for standard sheets.

REVISIONS:

File Number	Description of change(s)
TOC-1, 5 and 8 thru 12	Revised date of sheet and updated to reflect the inclusion of new standards.
BCR-3-1 and BCR-4-1	Notes: Deleted reference to terminal walls; Revised the note to remove reference to dimensions and to omit reference to different cross slopes and slab depths; Reinforcing Steel: Deleted pin diameter for RU0502 rebar; PIERS: Revised detail to show 1'-7" depth of deflection joint.

REVISIONS (cont'd):

File Number	Description of change(s)
BCR-3-2 and BCR-4-2	Notes to Designer: Revised note defining Contractor's responsibility; Omitted requirement to add lengths for rebars in steel schedule.
BCR-6-1 and BCR-7-1	Notes: Added notes for bevels, Contractor's responsibility, class of concrete and bid item for terminal wall; ELEVATION: Added RW0403 to spacing; SECTION B-B: Added RW0403 rebar; Reinforcing steel Schedule: Added RW0403 bar.
BCR-6-2 and BCR-7-2	Notes to Designer: Revised note defining Contractor's responsibility and note pertaining to AW Series bars.
BCR-8-1 and BCR-9-1	Notes: Added notes for bevels, contractor responsibility, class of concrete and bid item for terminal wall.
BCR-8-2 and BCR-9-2	Notes to Designer: Revised note defining Contractor's responsibility.
BIR-1-1 and BIR-2-1	Notes: Omitted reference to BIR-1; SECTION B-B: Added 12 in. dimension to rebar RW0402; Reinforcing steel Schedule: Omitted 11 in. dimension and length for RG0501 rebar.
BIR-1-2 and BIR-2-2	Notes to Designer: Revised note defining Contractor's responsibility, added a note for AW series bars.
BIR-1-3 and BIR-2-3	Reinforcing steel Schedule: Replaced RL04 series with RG0501.
BIR-3-1	Notes: Revised the note to omit reference to different cross slopes and slab depths.
BIR-4-1 and BIR-5-1	Notes: Omitted reference to BIR-1; Reinforcing steel Schedule: Omitted 11 in. dimension and length for RG0501 rebar.
BIR-4-2 and BIR-5-2	Notes to Designer: Revised note defining Contractor's responsibility.
BIR-4-3 and BIR-5-3	Reinforcing steel Schedule: Replaced RL04 series with RG0501.
BMB-3A-1 and BMB-5A-1	Notes: Added note for class of concrete, revised the note to omit reference to different cross slopes and slab depths.
BMB-3A-2 and BMB-5A-2	Notes to Designer: Revised note defining Contractor's responsibility.

REVISIONS (cont'd):

File Number	Description of change(s)
BPB-3A-1 and BPB-3B-1	Notes: Revised the note to omit reference to different cross slopes and slab depths; SECTION D-D: Added 12 in. dimension to rebar RW0402.
BPB-3A-2	Notes to Designer: Revised note defining Contractor's responsibility, added a note for AW series bars.
BPB-3B-2	Notes to Designer: Revised note defining Contractor's responsibility, added a note for AW series bars; Reinforcing steel Schedule: Omitted the length for RL04 series bars.
BPB-3C-1 and BPB-3D-1	Notes: Revised the note to omit reference to different cross slopes and slab depths.
BPB-3C-2	Notes to Designer: Revised note defining Contractor's responsibility; Reinforcing steel Schedule: Omitted the length for RL04 series bars.
BPB-3D-2	Notes to Designer: Revised note defining Contractor's responsibility.
BPB-3D-3	Reinforcing steel Schedule: Omitted the length for RL04 series bars.
BPF-3-1, BPF-4-1 and BPF-5-1	Revised the note pertaining to grounding framing posts and railing.
BR27C-12-1, BR27C-13-1 BR27C-14-1 and BR27C-15-1	Notes: Added note for rounded edges, revised the note to omit reference to different cross slopes and slab depths.
BR27C-12-2 and BR27C-15-2	Notes to Designer: Revised note defining Contractor's responsibility.
BR27C-14-2	Notes to Designer: Revised note pertaining to rail connections.
BR27C-12-3 and BR27C-15-3	Reinforcing steel Schedule: Omitted the length for RL04 series bars.
BR27C-13-3 and BR27C-14-3	Notes to Designer: Revised note defining Contractor's responsibility; Reinforcing steel Schedule: Omitted the length for RL04 series bars.

REVISIONS (cont'd):

File Number	Description of change(s)
BR27D-8-1, BR27D-9-1 and BR27D-10-1	Notes: Added note for rounded edges, revised the note to omit reference to different cross slopes and slab depths.
BR27D-8-2	Notes to Designer: Revised note defining Contractor's responsibility.
BR27D-8-3	Reinforcing steel Schedule: Omitted the length for RL04 series bars.
BR27D-9-3 and BR27D-10-3	Notes to Designer: Revised note defining Contractor's Responsibility; Reinforcing steel Schedule: Omitted the length for RL04 series bars.
BR27T-1-1 thru BR27T-9-1	Notes: Added notes for bevels, Contractor's responsibility, class of concrete and bid item for terminal wall; Title block: Added "C" and "D" to BR27 series.
BR27T-1-2, BR27T-2-2, BR27T-5-2, BR27T-6-2	Notes to Designer: Revised note defining Contractor's responsibility and note pertaining to AW Series bars.
BR27T-3-2, BR27T-4-2, BR27T-7-2, BR27T-8-2 BR27T-9-2	Notes to Designer: Revised note defining Contractor's responsibility.

RETAIN THIS MEMO IN FRONT OF INDEX TO VOLUME V – PART 3

/original signed/
Julius F. J. Völgyi, Jr., P.E.
Assistant State Structure and Bridge Engineer

For: Kendal R. Walus, P.E.
State Structure and Bridge Engineer

COMMONWEALTH of VIRGINIA

DEPARTMENT OF TRANSPORTATION
1401 EAST BROAD STREET
RICHMOND, 23219-2000

Gregory A. Whirley
COMMISSIONER

August 30, 2012

SUBJECT: Manual of the Structure and Bridge Division
Volume V – Part 3
Current Details (Standards)

MEMORANDUM

TO: Holders of Volume V – Part 3: Current Details (Standards)

The revision is intended to clarify modifications to standards. Design waivers/exceptions are required when changes to the standards are made.

VOIDED:

None

NEW ISSUES:

None

REVISIONS:

File Number	Description of change(s)
TOC-1	Revised date of sheet.
INSTR-1	Revised modification policy; added instructions for completing the sheet.

RETAIN THIS MEMO IN FRONT OF INDEX TO VOLUME V – PART 3

/original signed/
Julius F. J. Völgyi, Jr., P.E.
Assistant State Structure and Bridge Engineer

For: Kendal R. Walus, P.E.
State Structure and Bridge Engineer

COMMONWEALTH of VIRGINIA

DEPARTMENT OF TRANSPORTATION
1401 EAST BROAD STREET
RICHMOND, 23219-2000

Gregory A. Whirley
COMMISSIONER

August 7, 2012

SUBJECT: Manual of the Structure and Bridge Division
Volume V – Part 3
Current Details (Standards)

MEMORANDUM

TO: Holders of Volume V – Part 3: Current Details (Standards)

NOTES:

Standards are revised for corrosion resistant reinforcing (CRR) steel designations (Class I, II or III) that will be effective with the March 2013 ad date. For projects going to ad prior to that date, CRR steels that are designated on the standards must be changed to one or more of the following:

corrosion resistant reinforcing steel – low carbon chromium
corrosion resistant reinforcing steel – stainless clad
corrosion resistant reinforcing steel – solid stainless

For more information on CRR, see the current IIM-S&B-81.

VOIDED:

None

NEW ISSUES:

None

REVISIONS:

File Number	Description of change(s)
TOC-1, 4 thru 12	Revised date of applicable sheets.
BBD-8	Deleted Chamfer Detail and stud shear connector details in SECTIONS A-A and B-B. Under Notes, added sheet reference and deleted note for sole plate to be galvanized.
BCR-3-1and BCR-4-1	Notes: Added "Class …" to Corrosion Resistant Reinforcing Steel; revised note for different cross slopes and slab depths.
BCR-6-1 thru BCR-9-1	Notes: Added "Class …" to Corrosion Resistant Reinforcing Steel.
BCR-3-2, BCR-4-2 and BCR-6-2 thru BCR-9-2	Notes: Replaced "type" with "Class I, II or III."
BCS-28A-1, BCS-30A-1 thru BCS-33A-1	Notes: Added "Class …" to Corrosion Resistant Reinforcing Steel.
BCS-28A-3 and BCS-30A-3 thru BCS-33A-3	Notes: Replaced "type" with "Class I, II or III."
BGL-1-1	Notes: Type of bolt to use with galvanized and unpainted angles.
BGL-2-1	Notes: H. S. bolts for angles to be galvanized.
BIR-1-2, BIR-2-2, BIR-4-2 and BIR-5-2	Notes to Designer: Deleted fourth note.
BIR-3-1	Notes: Added "Class …" to Corrosion Resistant Reinforcing Steel; added ASTM references for round head bolts, nuts and washers in fifth note; revised note for different cross slopes and slab depths.
BIR-3-2	Notes: Replaced "type" with "Class I, II or III."
BMB-3A-1 and BMB-5A-1	Notes: Added "Class …" to Corrosion Resistant Reinforcing Steel; revised note for different cross slopes and slab depths.
BMB-3A-2 and BMB-5A-2	Notes to Designer: Deleted second note and replaced "type" with "Class I, II or III."

REVISIONS (cont'd)

File Number	Description of change(s)
BPB-3A-1, BPB-3B-1, BPB-3C-1 and BPB-3D-1	Reinforcing Steel Schedule: Revised the dimensions and length of reinforcing bar RV0502; SECTION A-A: Added 2 in. dimension from reinforcing bar to face of curb; Notes: Added "Class …" to Corrosion Resistant Reinforcing Steel; revised note for different cross slopes and slab depths.
BPB-3A-2, BPB-3B-2, BPB-3C-2, BPB-3D-2 and BPB-3D-3	Notes to Designer: Deleted note and replaced "type" with "Class I, II or III."
BPP-1-1	Added PROJECTING BAR CLIP DETAIL and revised clip note in PILE BUILD UP ELEVATION.
BR27C-12-1 thru BR27C-15-1 and BR27D-8-1 thru BR27D-10-1	Notes: Added "Class …" to Corrosion Resistant Reinforcing Steel; added ASTM references for round head bolts, nuts and washers; revised diameter of bolt and hole to 3/4" and 7/8" respectively in seventh note; deleted nut cover and revised bolt extensions; revised cross slopes and slab depths. BASE PLATE DETAIL: Added "Not to scale" and redrew slots to proper scale.
BR27C-16-1and BR27D-11-1	Moved notes to this sheet.
BR27C-12-3 thru BR27C-15-3 and BR27D-8-3 thru BR27D-10-3	Notes: Replaced "type" with "Class I, II or III."
BR27T-1-1 thru BR27T-9-1	Notes: Added "Class …" to Corrosion Resistant Reinforcing Steel.
BR27T-1-2, BR27T-2-2, BR27T-3-3, BR27T-4-3, BR27T-5-2, BR27T-6-2, BR27T-7-3, BR27T-8-3 and BR27T-9-2	Notes: Replaced "type" with "Class I, II or III."
BTB-1-1	SIDE ELEVATION: Corrected location of the 3" dimension from bolt to top of deck; PLAN VIEW: Revised to show corrected post at SECTION A-A; ELEVATION VIEW: Revised to show corrected posts and align the end of bridge in both views. Added "Not to Scale" to sheet.
BTC-4-1 thru BTC-7-1	Added payment note.

REVISIONS (cont'd)

File Number	Description of change(s)
BTC-4-1 and BTC-5-1	Notes: Added type of bolt to use with galvanized and unpainted angles.
BTC-6-1 and BTC-7-1	Notes: H. S. bolts for angles to be galvanized.
BWL-1-1	Notes: Added type of bolt to use with galvanized and unpainted angles.
BWL-2-1	Notes: H. S. bolts for angles to be galvanized.

RETAIN THIS MEMO IN FRONT OF INDEX TO VOLUME V – PART 3

/original signed/
Julius F. J. Völgyi, Jr., P.E.
Assistant State Structure and Bridge Engineer

For: Kendal R. Walus, P.E.
State Structure and Bridge Engineer

COMMONWEALTH of VIRGINIA

DEPARTMENT OF TRANSPORTATION
1401 EAST BROAD STREET
RICHMOND, 23219-2000

Gregory A. Whirley
COMMISSIONER

April 6, 2012

SUBJECT: Manual of the Structure and Bridge Division
Volume V – Part 3
Current Details (Standards)

MEMORANDUM

TO: Holders of Volume V – Part 3: Current Details (Standards)

VOIDED:

File Number	Description of change(s)
BCR-1-1; BCR-2-1; and BCR-5-1 BCR-1-2; BCR-2-2 and BCR-5-2 BR27C-1-1 thru BR27C-11-1; BR27C-1-2 thru BR27C-11-2; BR27C-1-3; BR27C-2-3; BR27C-4-3 thru BD27C-11-3 BR27D-1-1 thru BR27D-7-1; BR27D-1-2 thru BR27D-7-2; BR27D-1-3; BR27D-2-3 and BR27D-4-3 thru BR27D-7-3	Replaced with series showing terminal wall shown either on abutment wingwall or superstructure

NEW ISSUES:

File Number	Description of change(s)
BCR-7-1	Added new standard showing cast-in-place terminal wall on abutment U-back wingwall.
BCR-7-2	Added notes to designer.
BCR-8-1 and BCR-9-1	Added new standard showing cast-in-place terminal wall on superstructure.
BCR-8-2, BCR-9-2 and BCR-9-3	Added notes to designer.
BIR-1-3 and BIR-2-3	Added notes to designer.
BIR-4-1 and BIR-5-1	Added new standard showing cast-in-place terminal wall on superstructure.
BIR-4-2; BIR-4-3; BIR-5-2 and BIR-5-3	Added notes to designer.
BPB-3C-1 and BPB-3D-1	Added new standard showing cast-in-place terminal wall on superstructure.
BPB-3C-2, BPB-3D-2 and BPB-3D-3	Added notes to designer.
BR27C-12-1	Replaced BR27C-1. Added notes referring to railing, base plate details and details showing continuity between railing and terminal wall on superstructure. Moved terminal wall and U back wing details to BR27T-1. Added reinforcing steel schedule for railing and sheet references.
BR27C-12-2	Replaced BR27C-1-2. Revised first note and miscellaneous details note. Added a note defining the Contractor's responsibility to determine the number of reinforcing bars and other details required.
BR27C-12-3	Replaced BR27C-1-3. Added a note to complete the type of corrosion resistant reinforcing steel required and the dimensions and lengths of rebars in schedule. Added sheet references.

NEW ISSUES (cont'd)

File Number	Description of change(s)
BR27C-13-1	Replaced BR27C-6. Added notes referring to railing, base plate details and details showing continuity between railing and terminal wall on superstructure. Deleted terminal wall and U back wing details. Added reinforcing steel schedule for railing and sheet references.
BR27C-13-2	Replaced BR27C-6-2. Revised miscellaneous details note.
BR27C-13-3	Replaced BR27C-6-3. Added a note to complete the type of corrosion resistant reinforcing steel required and the dimensions and lengths of rebars in schedule. Added a note defining the Contractor's responsibility to determine the number of reinforcing bars and other details required. Added sheet references.
BR27C-14-1	Replaced BR27C-8. Added notes referring to railing, base plate details and details showing continuity between railing and terminal wall on superstructure. Moved terminal wall and U back wing details to BR27T-5. Added reinforcing steel schedule for railing and sheet references.
BR27C-14-2	Replaced BR27C-8-2. Revised first note and miscellaneous details note.
BR27C-14-3	Replaced BR27C-8-3. Added a note to complete the type of corrosion resistant reinforcing steel required and the dimensions and lengths of rebars in schedule. Added a note defining the Contractor's responsibility to determine the number of reinforcing bars and other details required. Added sheet references.
BR27C-15-1	Replaced BR27C-10-1. Added notes referring to railing, base plate details and details showing continuity between railing and terminal wall on superstructure. Moved terminal wall and U back wing details to BR27T-5. Added reinforcing steel schedule for railing and sheet references.
BR27C-15-2	Replaced BR27C-10-2. Revised first note and miscellaneous details note. Added a note defining the Contractor's responsibility to determine the number of reinforcing bars and other details required.

NEW ISSUES (cont'd)

File Number	Description of change(s)
BR27C-15-3	Replaced BR27C-10-3. Added a note to complete the type of corrosion resistant reinforcing steel required and the dimensions and lengths of rebars in schedule. Added sheet references.
BR27C-16-1	Replaced BR27C-3-1. Removed base plate detail and reinforcing steel schedule. Omitted all notes except fabricator notes. Added sheet references.
BR27C-16-2	Replaced BR27C-3-2. Revised first note. Omitted notes pertaining to reinforcing steel and the note defining the Contractor's responsibility to determine the number of reinforcing bars and other details required.
BR27D-8-1	Replaced BR27D-1. Added notes referring to railing, base plate details and details showing continuity between railing and terminal wall on superstructure. Moved terminal wall and U back wing details to BR27T-1. Added reinforcing steel schedule for railing and sheet references.
BR27D-8-2	Replaced BR27D-1-2. Revised first note and miscellaneous details note. Added a note defining the Contractor's responsibility to determine the number of reinforcing bars and other details required.
BR27D-8-3	Replaced BR27D-1-3. Added a note to complete the type of corrosion resistant reinforcing steel required and the dimensions and lengths of rebars in schedule. Added sheet references.
BR27D-9-1	Replaced BR27D-4. Added notes referring to railing, base plate details and details showing continuity between railing and terminal wall on superstructure. Deleted terminal wall and U back wing details. Added reinforcing steel schedule for railing and sheet references.
BR27D-9-2	Replaced BR27D-4-2. Revised miscellaneous details note.
BR27D-9-3	Replaced BR27D-4-3. Added a note to complete the type of corrosion resistant reinforcing steel required and the dimensions and lengths of rebars in schedule. Added a note defining the Contractor's responsibility to determine the number of reinforcing bars and other details required. Added sheet references.

NEW ISSUES (cont'd)

File Number	Description of change(s)
BR27D-10-1	Replaced BR27D-6-1. Added notes referring to railing, base plate details and details showing continuity between railing and terminal wall on superstructure. Moved terminal wall and U back wing details to BR27T-5. Added reinforcing steel schedule for railing and sheet references.
BR27D-10-2	Replaced BR27D-6-2. Revised miscellaneous details note.
BR27D-10-3	Replaced BR27D-6-3. Added a note defining the Contractor's responsibility to determine the number of reinforcing bars and other details required. Added a note to complete the type of corrosion resistant reinforcing steel required and the dimensions and lengths of rebars in schedule. Added sheet references.
BR27D-11-1	Replaced BR27D-3-1. Removed base plate detail and reinforcing steel schedule. Omitted all notes except fabricator notes. Added sheet references.
BR27D-11-2	Replaced BR27D-3-2. Revised first note. Omitted notes pertaining to reinforcing steel and the note defining the Contractor's responsibility to determine the number of reinforcing bars and other details required.
BR27T-1-1 and BR27T-5-1	Added new standard showing cast-in-place terminal wall on abutment U-back wingwall. Revised distance to bolts in View A-A.
BR27T-1-2; BR27T-1-3; BR27T-2-2; BR27T-2-3; BR27T-3-2; BR27T-3-3; BR27T-4-2; BR27T-4-3; BR27T-5-2; BR27T-5-3; BR27T-6-2; BR27T-6-3; BR27T-7-2; BR27T-7-3; BR27T-8-2; BR27T-8-3; BR27T-9-2 and BR27T-9-3	Added notes to designer. Revised distance to bolts in notes.
BR27T-2-1 and BR27T-6-1	Added new standard showing cast-in-place terminal wall on abutment wingwall. Revised distance to bolts in View A-A.

NEW ISSUES (cont'd)

File Number	Description of change(s)
BR27T-3-1; BR27T-4-1; BR27T-7-1 and BR27T-8-1	Added new standard showing cast-in-place terminal wall on superstructure. Revised distance to bolts in View A-A.
BR27T-9-1	Added new standard showing cast-in-place terminal wall on approach slab. Revised distance to bolts in View A-A.

REVISIONS:

File Number	Description of change(s)
TOC-1, 5 and 8 thru 11	Revised dates of applicable sheets.
BCR-3-1	Added notes referring to railing and details showing continuity between railing and terminal wall on superstructure. Omitted terminal wall reinforcing steel from schedule. Added sheet references.
BCR-3-2	Revised miscellaneous details note. Added a note to complete the type of corrosion resistant reinforcing steel required and the dimensions and lengths of rebars in schedule. Added sheet references.
BCR-4-1	Added notes referring to railing and details showing continuity between railing and terminal wall on superstructure. Omitted terminal wall reinforcing steel from schedule. Added sheet references.
BCR-4-2	Revised miscellaneous details note. Added a note to complete the type of corrosion resistant reinforcing steel required and the dimensions and lengths of rebars in schedule. Added sheet references.
BCR-6-1	Added reinforcing steel schedule. Omitted notes referring to railing. Revised distance to bolts in View A-A. Added sheet references.
BCR-6-2	Added a note defining the Contractor's responsibility to determine the number of reinforcing bars and other details required. Under View A-A, revised distance to bolts. Added sheet references.

REVISIONS (cont'd)

File Number	Description of change(s)
BIR-1-1	Revised distance to bolts in View A-A.
BIR-1-2	Revised distance to bolts in notes.
BIR-2-1	Revised distance to bolts in View A-A.
BIR-2-2	Revised distance to bolts in notes.
BIR-3-1	Revised copyright date.
BIR-3-2	Revised usage of standard to include BIR-4 and BIR-5. Added sheet reference.
BPB-3A-1 and BPB-3B-1	Revised distance to bolts in Section D-D. Corrected misspelled word, "guardrail".
BPB-3A-2 and BPB-3B-2	Revised distance to bolts in notes. Added note to complete lengths of rebars in schedule and sheet references.

RETAIN THIS MEMO IN FRONT OF INDEX TO VOLUME V – PART 3

/original signed/
Julius F. J. Völgyi, Jr., P.E.
Assistant State Structure and Bridge Engineer

For: Kendal R. Walus, P.E.
State Structure and Bridge Engineer

COMMONWEALTH of VIRGINIA

DEPARTMENT OF TRANSPORTATION
1401 EAST BROAD STREET
RICHMOND, 23219-2000

Gregory A. Whirley
COMMISSIONER

September 9, 2010

SUBJECT: Manual of the Structure and Bridge Division
Volume V – Part 3
Current Details (Standards)

MEMORANDUM

TO: Holders of Volume V – Part 3: Current Details (Standards)

REVISIONS:

File Number	Description of change(s)
TOC-1, TOC-9, TOC-10 and TOC-11	Revised dates of applicable sheets.
BR27C-1, BR27C-2 BR27C-6, BR27C-7 BR27C-8, BR27C-9 BR27C-10 and BR27C-11	Decreased clearance of RG04 series to face of rail from 2” to 1 ½” in Section E-E.
BR27C-3	Revised RG0401 and RG0402 dimension from 6½” to 7” in Reinforcing Steel Schedule.
BR27C-1-2 and BR27C-2-2	Revised section depiction header.
BR27C-2-3	Removed “and U-back Wing” from sheet header.
BR27C-6-2, BR27C-7-2, BR27C-8-2, BR27C-9-2, BR27C-10-2 and BR27C-11-2	Revised usage language to include all pedestrian and/or bicycle facilities.
BR27D-1 and BR27D-2	Decreased clearance of RG04 series to face of rail from 2” to 1 ½” in Section E-E and removed RG0402 callout from “PIERS – Continuous – without joint in slab” detail.

REVISIONS (cont'd)

File Number	Description of change(s)
BR27D-3	Revised RG0401 and RG0402 dimension from 6½" to 7" in Reinforcing Steel Schedule. Revised detail layout to look similar to standard BR27C-3.
BR27D-4 and BR27D-5 BR27D-6 and BR27D-7	Decreased clearance of RG04 series to face of rail from 2" to 1 ½" in Section E-E.
BR27D-1-2 and BR27D-2-2	Revised section depiction header.
BR27D-4-2 and BR27D-5-2	Revised usage language to include all pedestrian and/or bicycle facilities and revised 1'-6" to 1'-7" in final note regarding Section D-D.
BR27D-6-2 and BR27D-7-2	Revised usage language to include all pedestrian and/or bicycle facilities.

RETAIN THIS MEMO IN FRONT OF INDEX TO VOLUME V – PART 3

/original signed/
Julius F. J. Völgyi, Jr., P.E.
Assistant State Structure and Bridge Engineer

For: Kendal R. Walus, P.E.
State Structure and Bridge Engineer

COMMONWEALTH of VIRGINIA

DEPARTMENT OF TRANSPORTATION
1401 EAST BROAD STREET
RICHMOND, 23219-2000

Gregory A. Whirley
Acting COMMISSIONER

June 14, 2010

SUBJECT: Manual of the Structure and Bridge Division
Volume V – Part 3
Current Details (Standards)

MEMORANDUM

TO: Holders of Volume V – Part 3: Current Details (Standards)

VOIDED:

File Number	Description of change(s)
BPF-3-3	Contents moved to previous sheet. Omitted note pertaining to threaded inserts.
BPF-4-3 and BPF-5-3	Contents moved to previous sheet.
BR27C-4 and BR27C-5	These rails are no longer used for sidewalk (pedestrian) applications.
BR27C-4-2, BR27C-4-3, BR27C-5-2 and BR27C-5-3	Notes are no longer needed.

NEW ISSUES:

File Number	Description of change(s)
None	

REVISIONS:

File Number	Description of change(s)
TOC-1 thru -12	Revised dates of applicable sheets.
BAS-11A thru BAS-20AR	Revised notes: Add "Cost included in select backfill" to third paragraph.
BBD-8-1	Added a note to call for the sole plate to be galvanized. Revise distance to stud from 5 in. to 6 in. in Section A-A and B-B. Corrected location of arrowhead in Section A-A.
BCR-1-1	Revised the detail at pier with continuous slab to add "Top of slab." Revised length of rebar AB0402 from 7'-9" to 7'-0" in the reinforcing steel schedule.
BCR-2-1	Revised the detail at pier with continuous slab to delete the curb and add "Top of slab." Revised length of rebar AB0402 from 7'-9" to 7'-0" in the reinforcing steel schedule.
BCR-3-1	Revised length of deflection joint from 1'-9" to 2'-2" and added "Top of slab" in detail at pier with continuous slab. Revised length of rebar AB0402 from 7'-9" to 7'-0" in the reinforcing steel schedule.
BCR-4-1	Revised the detail at pier with continuous slab to delete the curb, revise length of deflection joint from 1'-9" to 2'-2" and added "Top of slab." Revised length of rebar AB0402 from 7'-9" to 7'-0" in the reinforcing steel schedule.
BCR-5-1 and BCR-6-1	Revised terminal wall length from 8'- 0" to 7'-3."
BCS-31A-1	Removed extra wording "the post clears" in last note.
BEJ-6-1 and BEJ-7-1	Revised first note to delete "Unless otherwise noted." Added clip in Part Section at Abutment.
BEJ-6/7/10/11/12-6	Revised excess temperature allowance from "25%" to "20%" in third note.
BGL-1 and BGL-2	Revised the note for galvanization of miscellaneous hardware and added a note for structural steel for angles.
BIR-1-1	Revised reinforcing steel schedule and the designation for steel rail tubing from "TS" to "HSS" in all locations. Modified 7'-3" and 6'-9" dimension lines in Terminal Wall View. Noted location of the RL04 series reinforcement in Elevation View.

REVISIONS (cont'd)

File Number	Description of change(s)
BIR-2-1	Revised reinforcing steel schedule and designation for steel rail tubing from "TS" to "HSS" in all locations. Noted location of the RL04 series reinforcement in Elevation View.
BIR-3-1	Revised designation for steel rail tubing from "TS" to "HSS" in all locations.
BPF-3-1	Modified Notes, PLAN, and Section A-A.
BPF-4-1	Modified Notes, and PLAN.
BPF-5-1	Revised misspelled word "welded" in tenth note. Modified Notes, and PLAN.
BPF-3-2, BPF-4-2 and BPF-5-2	Deleted the guidelines and considerations for placement of fence. Added a reference to new Volume V – Part 2, Chapter 30, Fencing (Pedestrian) for placement guidelines.
BR27C-1 and BR27C-2	Deleted "or top of sidewalk" from Section D-D and "without sidewalk" from Section E-E.
BR27C-1-2 and BR27C-2-2	Notes to Designer revised to delete the sidewalk (pedestrian) application for these rails and the modified detail for sidewalk applications. Railing standard is to be used only as a traffic barrier.
BR27C-3-1	Corrected misspelled word "Contractor" in eighteenth note. Revise designation for steel rail tubing from "TS" to "HSS" in all locations.
BR27C-3-2	Notes to Designer revised to delete reference to standards BR27C-4 and BR27C-5 which are voided.
BR27C-6-2, BR27C-7-2, BR27C-8-2, BR27C-9-2, BR27C-10-2 and BR27C-11-2	Notes to Designer revised to replace "multi-use" with "shared use."
BR27D-1 and BR27D-2	Deleted "or top of sidewalk" from Section D-D, "without sidewalk" from Section E-E (without sidewalk), Section E-E (with sidewalk) and reference to rebar RG0402 in Elevation View.
BR27D-1-2 and BR27D-2-2	Notes to Designer revised to delete the sidewalk (pedestrian) application for these rails and the detail for sidewalk applications.

REVISIONS (cont'd)

File Number	Description of change(s)
BR27D-3-1	Corrected misspelled word "Contractor" in eighteenth note. Revised designation for steel rail tubing from "TS" to "HSS" in Section A-A.
BR27D-4-2, BR27D-5-2, BR27D-6-2 and BR27D-7-2	Notes to Designer revised to replace "multi-use" to "shared use."
BTC-4	Revised the note for steel fittings/rods and the note for structural steel for angles.
BTC-5	Revised the note for steel fittings/rods and the note for structural steel for angles. Corrected misspelled word "positive" in fourth note.
BTC-6	Revised the note for structural steel for angles and moved the fifth note for threaded couplings to the fourth note position.
BTC-7	Revised the note for structural steel for angles.
BWL-1 and BWL-2	Revised the note for galvanization of miscellaneous hardware and added a note for structural steel for angles.

RETAIN THIS MEMO IN FRONT OF INDEX TO VOLUME V – PART 3

/original signed/
Julius F. J. Völgyi, Jr., P.E.
Assistant State Structure and Bridge Engineer

For: Kendal R. Walus, P.E.
State Structure and Bridge Engineer

COMMONWEALTH of VIRGINIA

DEPARTMENT OF TRANSPORTATION
1401 EAST BROAD STREET
RICHMOND, 23219-2000

David S. Ekern, P.E.
COMMISSIONER

January 7, 2010

SUBJECT: Manual of the Structure and Bridge Division
Volume V – Part 3
Current Details (Standards)

MEMORANDUM

TO: Holders of Volume V – Part 3: Current Details (Standards)

VOIDED STANDARDS:

None

NEW ISSUES:

File Number	Description of changes(s)
TOC-12	Added new sheet to Table of Contents.

REVISIONS:

File Number	Description of changes(s)
TOC-1 and TOC-11	Revised date.
BCF-2	Made miscellaneous drafting changes.
BCR-5 and BCR-6	Revised the reinforcing steel note to call for corrosion resistant reinforcing steel (CRR).
BCR-5-2 and BCR-6-2	Added instructions for the designer to specify the type of CRR.
BCS-28A, BCS-30A, BCS-31A, BCS-32A, and BCS-33A	Revised the reinforcing steel note to call for corrosion resistant reinforcing steel (CRR).

REVISIONS (cont'd):

File Number	Description of changes(s)
BCS-28A-3, BCS-30A-3, BCS-31A-3, BCS-32A-3, and BCS-33A-3	Added instructions for the designer to specify the type of CRR.
BIR-3	Revised the reinforcing steel note to call for corrosion resistant reinforcing steel (CRR).
BIR-3-2	Added instructions for the designer to specify the type of CRR.
BMB-3A and BMB-5A	Revised the reinforcing steel note to call for corrosion resistant reinforcing steel (CRR).
BMB-3A-2 and BMB-5A-2	Added instructions for the designer to specify the type of CRR.
BPB-3A and BPB-3B	Revised the reinforcing steel note to call for corrosion resistant reinforcing steel (CRR).
BPB-3A-2 and BPB-3B-2	Added instructions for the designer to specify the type of CRR.
BPP-1	Revised the ninth note to call for hot dip galvanized reinforcing steel in bridges where piles are exposed.
BR27C-3 and BR27D-3	Revised the reinforcing steel note to call for corrosion resistant reinforcing steel (CRR).
BR27C-3-2 and BR27D-3-2	Added instructions for the designer to specify the type of CRR.

RETAIN THIS MEMO IN FRONT OF INDEX TO VOLUME V – PART 3

/original signed/
Julius F. J. Völgyi, Jr., P.E.
Assistant State Structure and Bridge Engineer

For: Kendal R. Walus, P.E.
State Structure and Bridge Engineer

COMMONWEALTH of VIRGINIA

DEPARTMENT OF TRANSPORTATION
1401 EAST BROAD STREET
RICHMOND, 23219-2000

David S. Ekern, P.E.
COMMISSIONER

November 2, 2009

SUBJECT: Manual of the Structure and Bridge Division
Volume V – Part 3
Current Details (Standards)

MEMORANDUM

TO: Holders of Volume V – Part 3: Current Details (Standards)

VOIDED STANDARDS:

None

NEW ISSUES:

File Number	Description of changes(s)
TOC-12	Added page to Table of Contents.
BTB-1-1 and BTB-1-2	Thrie-Beam Guardrail added.

REVISIONS:

File Number	Description of changes(s)
TOC-1 to TOC-11	Updated to reflect the inclusion of new standard.

RETAIN THIS MEMO IN FRONT OF INDEX TO VOLUME V – PART 3

/original signed/
Julius F. J. Völgyi, Jr., P.E.
Assistant State Structure and Bridge Engineer

For: Kendal R. Walus, P.E.
State Structure and Bridge Engineer

COMMONWEALTH of VIRGINIA

DEPARTMENT OF TRANSPORTATION
1401 EAST BROAD STREET
RICHMOND, 23219-2000

David S. Ekern, P.E.
COMMISSIONER

May 29, 2009

SUBJECT: Manual of the Structure and Bridge Division
Volume V – Part 3
Current details (Standards)

MEMORANDUM

TO: Holders of Volume V – Part 3: Current Details (Standards)

NOTE: Effective with the December Advertisement, Standards shall be sealed and signed in accordance with Volume V – Part 2, File No. 01.16.1 thru 01.16.7.

VOIDED STANDARDS:

File Number	Description
BEJ-8-3 and BEJ-9-4	Replaced by new standards.
BEJ-6/7/8/9-5 thru -10	NOTES TO DESIGNER: Replaced by new notes to designer.

NEW ISSUES:

File Number	Description of changes(s)
BEJ-10-3, BEJ-11-4 and BEJ-12-5	Added at grade details for sliding plates. Eliminated skewed bearing stiffener detail. Minor drafting corrections.
BEJ-6/7/10/11/12-6 thru -11	NOTES TO DESIGNER: Sliding plate required at pedestrian and/or bicycle facilities regardless of tooth length. Added notes on use of computer program.

REVISIONS:

File Number	Description of changes(s)
All standard sheets	All standard sheets have been revised to reflect the border for sealing and signing of plans.

REVISIONS:

File Number	Description of changes(s)
BAS-11-1 thru BAS-20AR-1	Minor drafting corrections.
BBD-6-1, BBD-7A-2 and BBD-7B-3	Minor corrections to Notes.
BBD-8-1	Minor drafting corrections.
BBD-8-2	NOTES TO DESIGNER: Added note on use of computer program.
BBD-9-1	Modified Notes.
BBD-9-2	NOTES TO DESIGNER: Added note on use of computer program.
BCF-1-1 and BCF-2-1	Minor drafting corrections.
BCR-1-1 thru BCR-4-1	Added dimensions to detail for slab continuous over piers and minor corrections.
BCR-5-1 thru BCR-6-1	Modified terminal section.
BCS-21A-1 thru BCS-30A-1	Minor drafting corrections.
BCS-31A-1	Corrected rebar designation in PLAN and minor drafting corrections.
BCS-32A-1	Minor drafting corrections.
BCS-33A-1	Corrected rebar designation in PLAN and minor drafting corrections.
BEJ-1-1 thru BEJ-3-1	Minor drafting corrections.
BEJ-6-1 thru BEJ-7-2	Minor drafting corrections. Updated sheet references.
BGL-1-1	Minor drafting corrections.
BGL-1-2 and BGL-2-2	NOTES TO DESIGNER: Added note on location of utilities.
BIR-1-1 and BIR-2-1	Modified terminal section and minor drafting corrections.
BIR-3-1	Minor drafting correction.
BMB-3A-1	Deleted PART PLAN and minor correction.
BMB-5A-1	Deleted PART PLAN and minor corrections.
BPB-3A-1 thru BPB-3B-1	Modified terminal section, deleted PART PLAN and minor drafting corrections.
BPF-3-1 thru BPF-5-1	Modified details to reflect larger post size required. Added note for pipe material requirements. Minor drafting corrections.
BPF-3-2 thru BPF-5-2	NOTES TO DESIGNER: Modified weight of fence per foot for use in design.
BPP-1-1	Minor drafting corrections.

REVISIONS:

File Number	Description of changes(s)
BR27C-1-1 thru BR27C-2-1	Modified terminal wall and minor drafting corrections.
BR27C-3-1	Corrected BASE PLATE DETAIL and minor drafting correction.
BR27C-4-1 thru BR27C-11-1	Modified terminal wall and minor drafting corrections.
BR27D-1-1 thru BR27D-2-1	Modified terminal wall and minor drafting corrections.
BR27D-3-1	Corrected BASE PLATE DETAIL and minor drafting correction.
BR27D-4-1 thru BR27D-7-1	Modified terminal wall and minor drafting corrections.
BTC-4-1 thru BTC-7-1	Minor drafting corrections.
BTC-4-2 thru BTC-7-2	Added note on location of utilities.
BWL-1-1 and BWL-2-1	Minor drafting corrections.
BWL-1-2 and BWL-2-2	Added note on location of utilities.

RETAIN THIS MEMO IN FRONT OF INDEX TO VOLUME V – PART 3

/original signed/
Julius F. J. Völgyi, Jr., P.E.
Assistant State Structure and Bridge Engineer

For: Kendal R. Walus, P.E.
State Structure and Bridge Engineer

COMMONWEALTH of VIRGINIA

DEPARTMENT OF TRANSPORTATION
1401 EAST BROAD STREET
RICHMOND, 23219-2000

David S. Ekern, P.E.
COMMISSIONER

July 11, 2008

SUBJECT: Manual of the Structure and Bridge Division
Volume V – Part 3
Current details (Standards)

MEMORANDUM

TO: Holders of Volume V – Part 3: Current Details (Standards)

All of the standard sheets in this series have been revised. Two blocks for the P.E. stamp have been added to the lower left hand corner and the copyright date has been changed to 2008. Some details have been rearranged to provide space for the P.E. stamps.

NOTE: Standard sheets are not required to be sealed and signed at this time.

VOIDED STANDARDS:

File Number	Comments
BBD-4	Not cost effective. Range of designs more economical with laminated bearing pads.
BBD-5	Not cost effective. Range of designs more economical with laminated bearing pads.
BPF-2	Standard replaced with standards BPF-4 and BPF-5.

NEW ISSUES:

File Number	Description
INSTR-2 and -3	Added instructions for external users for accessing Microstation (.dgn) files and for printing manual.

NEW ISSUES (cont'd):

File Number	Description
BCR-5	Adding the two blocks for the P.E. stamp to standards BCR-1 and BCR-2 required some of the details to be moved to another sheet. Therefore, the terminal wall details and notes were moved to this sheet. Note added for Contractor to adjust reinforcing steel for horizontal slope and vertical gradient.
BCR-6	Adding the two blocks for the P.E. stamp to standards BCR-3 and BCR-4 required some of the details to be moved to another sheet. Therefore, the terminal wall details and notes were moved to this sheet. Note added for Contractor to adjust reinforcing steel for horizontal slope and vertical gradient.
BCS-30A	Bridge conduit system for lighting for use with the BR27C-series without sidewalk
BCS-31A	Bridge conduit system for lighting for use with the BR27C-series with sidewalk.
BCS-32A	Bridge conduit system for lighting for use with the BR27D-series without sidewalk.
BCS-33A	Bridge conduit system for lighting for use with the BR27D-series with sidewalk.
BPF-4	Pedestrian fence details for use with the BR27C-series and BR27D-series rail without sidewalk.
BPF-5	Pedestrian fence details for use with the BR27C-series and BR27D-series rail with sidewalk.

REVISIONS:

File Number	Description of change(s)
TOC-1 thru -11	Added -DGN link to each standard file. Table of contents updated.
INSTR-1	Falcon location changed.
BAS-series	Deleted capacity note and note that approach slab is not included in bridge contract. Quantity items revised. Corners near abutments revised for skew for approach slabs with sidewalks (BAS-18L, -18R, -19L, -19R, -20L, -20R, -18AL, -18AR, -19AL, -19AR, -20AL and 20AR).
BCF-2-1	Changed DETAIL A to DETAIL C. Notes: Added note requiring Charpy V- Notch Impact Test. Misc. drafting corrections.
BCR-1-1	Added "Face of rail" to DECK SLABS, SLAB SPANS, and TYPICAL SECTION BETWEEN POSTS. Misc. drafting corrections. Moved some details to new standard BCR-5.

REVISIONS (cont'd):

File Number	Description of change(s)
BCR-1-2	NOTES TO DESIGNER: Some notes deleted and moved to BCR-5-2.
BCR-2-1	Added "Face of rail" to DECK SLABS, SLAB SPANS, and TYPICAL SECTION BETWEEN POSTS. Misc. drafting corrections. Moved some details to new standard BCR-5.
BCR-2-2	NOTES TO DESIGNER: Some notes deleted and moved to BCR-5-2.
BCR-3-1	Added "Face of rail" to DECK SLABS, SLAB SPANS, and TYPICAL SECTION BETWEEN POSTS. Misc. drafting corrections. Moved some details to new standard BCR-6.
BCR-3-2	NOTES TO DESIGNER: Some notes deleted and moved to BCR-6-2.
BCR-4-1	Added "Face of rail" to DECK SLABS, SLAB SPANS, and TYPICAL SECTION BETWEEN POSTS. Misc. drafting corrections. Moved some details to new standard BCR-6.
BCR-4-2	NOTES TO DESIGNER: Some notes deleted and moved to BCR-6-2.
BCS-21A-1	NOTES: Last note: Corrected "Section 705" to "Section 700." Circle with 8 under CONDUIT LAYOUT and SECTION A-A: Changed "metal conduit" to "galvanized steel pipe" and clarified details showing 2" conduit and 1" pipe.
BCS-22A-1	NOTES: Last note: Corrected "Section 705" to "Section 700." Circle with 8 under CONDUIT LAYOUT and SECTION A-A: Changed "metal conduit" to "galvanized steel pipe" and clarified details showing 2" conduit and 1" pipe.
BCS-28A-1	NOTES: Last note: Corrected "Section 705" to "Section 700." CONDUIT LAYOUT: Added 1" galvanized pipe.
BCS-29A-1	NOTES: Last note: Corrected "Section 705" to "Section 700." CONDUIT LAYOUT: Added 1" galvanized pipe.
BEJ-3-1	NOTES: "Section 105.02" to "Section 105.10." Deleted last note referencing Section 212 of the specifications.
BIR-1-1	Moved notes to standard BIR-3.
BIR-2-1	Moved notes to standard BIR-3.
BIR-3-1	Notes from BIR-1 and BIR-2 moved to this sheet. Deleted last sentence dealing with bid items. Note added for Contractor to adjust reinforcing steel for horizontal slope and vertical gradient.
BMB-3A-1	SECTION A-A: Added "Face of median curb." Note added for Contractor to adjust reinforcing steel for horizontal slope and vertical gradient.

REVISIONS (cont'd):

File Number	Description of change(s)
BMB-5A-1	SECTION A-A: Added "Face of median curb." Note added for Contractor to adjust reinforcing steel for horizontal slope and vertical gradient.
BPB-3A-1	Note added for Contractor to adjust reinforcing steel for horizontal slope and vertical gradient.
BPB-3B-1	Note added for Contractor to adjust reinforcing steel for horizontal slope and vertical gradient.
BPF-3-1	NOTES: Last note: "Section 705" changed to "Section 700."
BR27C-1-1 BR27C-2-1 BR27C-4-1 thru BR27C-11-1	Moved notes to standard BR27C-3. ELEVATION views: Revised post spacing(s) near abutment and at pier.
BR27C-3-1	Moved notes from BR27C-series. Note added for Contractor to adjust reinforcing steel for horizontal slope and vertical gradient. Misc. drafting corrections.
BR27D-1-1 BR27D-2-1 BR27D-4-1 thru BR27D-7-1	Moved notes to standard BR27D-3. ELEVATION views: Revised post spacing(s) near abutment and at pier. SECTION D-D: Plate size corrected to agree with standard BR27D-3.
BR27D-3-1	Moved notes from BR27C-series. Note added for Contractor to adjust reinforcing steel for horizontal slope and vertical gradient. Misc. drafting corrections.

RETAIN THIS MEMO IN FRONT OF INDEX TO VOLUME V – PART 3.

/original signed/
Julius F. J. Völgyi, Jr., P.E.
Assistant State Structure and Bridge Engineer

For: Kendal R. Walus, P.E.
State Structure and Bridge Engineer

COMMONWEALTH of VIRGINIA

DEPARTMENT OF TRANSPORTATION
1401 EAST BROAD STREET
RICHMOND, 23219-2000

David S. Ekern, P.E.
COMMISSIONER

August 31, 2007

MEMORANDUM

TO: Holders of Manual

SUBJECT: Manual of the Structure and Bridge Division
Volume V – Part 3
Current Details

All of the standards in the Manual of the Structure and Bridge Division Volume V – Part 3 have been revised including the NOTES TO DESIGNER. Major revisions include updating the standards to the drafting requirements of the office practice (Manual of the Structure and Bridge Division, Volume V – Part 2, Chapter 1) and conversion to MicroStation V8. Some standard sheets were congested and are now expanded to more sheets, etc. Due to the numerous changes, many editorial in nature, not all of the specific changes will be listed under REVISIONS. Only the major revisions will be noted.

NOTE: The three pipe aluminum rail standards used for sidewalk applications have been VOIDED. This rail was not crash tested. The standard may be used for projects through the April 2008 advertisement date. Thereafter, these standards may no longer be used. Two rails (BR27C-series and BR27D-series) that are crash tested have been developed for pedestrian/bicycle, multi-use and as traffic barriers.

VOIDED STANDARDS:

The following standards are VOIDED:

BCF-3	Cross frame details for curved steel plate girders
BCS-15A	Bridge conduit system used with three-pipe aluminum rail (BMR-14 and -15)
BEJ-4 and -5	Replaced with BEJ-6, -7, -8 and -9. Separated concrete and steel beams/girders. Separated details due to congestion of sheet.
BMR-14	Three-pipe aluminum rail with terminal wall and U-back wingwall
BMR-15	Three pipe aluminum rail with terminal wall

VOIDED STANDARDS (cont'd):

BMR-18	Three pipe aluminum rail – miscellaneous details
BTC-8	Telephone conduit system used with concrete T-beams

NEW ISSUES:

The following standards are new issues:

BR27C-1 thru thru -11	Steel tubular rail crash tested for TL-4 in various configurations for use as a traffic barrier and for sidewalk use (pedestrian/bicycle, multi-use).
BR27D-1 thru -7	Steel tubular rail crash tested for TL-2 in various configurations for use as a traffic barrier and for sidewalk use (pedestrian/bicycle, multi-use).
BEJ-6	Tooth expansion joint for steel beams/girders (part of voided BEJ-4)
BEJ-7	Tooth expansion joint for concrete beams. (part of voided BEJ-4)
BEJ-8 and -9	Tooth expansion joint: miscellaneous details (previously BEJ-5)

REVISIONS:

As noted in the introduction, only the major changes are noted below:

BAS-series	Drainage apron note deleted. Since all projects require select backfill, the aggregate base material under the approach slab was deleted (SECTION B-B). For full width slabs, joint section revised.
BBD-4	Data tables removed and added to NOTES TO DESIGNER. Table expanded requiring designer input.
BBD-5	Data tables removed and added to NOTES TO DESIGNER. Table expanded requiring designer input.
BBD-8	Updated sections to show Bulb-T.
BBD-9	Alternate fixed assembly deleted. Details simplified.
BCF-1	Added note on welding.

REVISIONS (cont'd):

BCF-2	Deleted cross frames CF9, CF10, CF12 and CF13. Added note on welds. NOTES TO DESIGNER: Deleted details. Details will be placed in Chapter 11 of the office practice in the future.
BCS-series	Corrected longitudinal movement references on some sheets.
BEJ-1 and -2	Deleted three-pipe aluminum rail from SECTION D-D. Modified section allowing for different rails/parapets.
BGL-2	Replaced concrete beam with Bulb-T shape.
BPF-2	Deleted 3-pipe aluminum rail from sections and changed dimensions in TYPICAL PART SECTION.
BPP-1	Deleted 22" pile. Changed number of strands for several pile sizes.
BTC-6 and -7	Replaced concrete beam with Bulb-T.
BWL-2	Replaced concrete beam with Bulb-T.

RETAIN THIS MEMO IN FRONT OF INDEX TO VOLUME V – PART 3

/original signed/
Julius F. J. Völgyi, Jr., P.E.
Assistant State Structure and Bridge Engineer

For: Kendal R. Walus, P.E.
State Structure and Bridge Engineer

COMMONWEALTH of VIRGINIA

DEPARTMENT OF TRANSPORTATION
1401 EAST BROAD STREET
RICHMOND, 23219-2000

GREGORY A. WHIRLEY
ACTING COMMISSIONER

December 19, 2005

SUBJECT: Manual of the Structure and Bridge Division
Volume V – Part 3
Current Details (Standards)

MEMORANDUM:

TO: Holders of Volume V - Part 3: Current Details (Standards)

REVISIONS:

File No.	Sheet No.	Description of change(s)
TOC-1 and 3		Changed dates for BBD-6, -7A, -7B.
BBD-6	1 of 7	Added four design notes for disc bearings.
BBD-7A	2 of 7	Added four design notes for disc bearings.
BBD-7B	3 of 7	Added four design notes for disc bearings.

RETAIN THIS MEMO IN FRONT OF TABLE OF CONTENTS TO VOLUME V – PART 3.

/original signed/
Julius F. J. Völgyi, Jr., P.E.
Assistant State Structure and Bridge Engineer

For: George M. Clendenin, P.E
State Structure and Bridge Engineer

Attachments

COMMONWEALTH of VIRGINIA

DEPARTMENT OF TRANSPORTATION
1401 EAST BROAD STREET
RICHMOND, 23219-2000

GREGORY A. WHIRLEY
ACTING COMMISSIONER

September 26, 2005

SUBJECT: Manual of the Structure and Bridge Division
Volume V – Part 3
Current Details (Standards)

MEMORANDUM:

TO: Holders of Volume V - Part 3: Current Details (Standards)

REVISIONS:

File No.	Sheet No.	Description of change(s)
TOC-3		Changed dates for BBD-6, -7A, -7B (previously there was only -7) as well as notes to designer – from 6 to 7 sheets in this section.
BBD-6	1 of 7	Notes revised. Section A-A, Fixed Disc Bearing, Type F-F added. Updated drafting/detailing with current office practice (S&B Volume V – Part 2).
BBD-7A	2 of 7	This sheet along with BBD-7B replaces BBD-7. Notes revised. Section A-A, Guided Disc Expansion Bearing, Type EF, and Detail B added. Updated drafting/detailing with current office practice (S&B Volume V – Part 2).
BBD-7B	3 of 7	This sheet along with BBD-7A replaces BBD-7. Notes revised. Section B-B, Non-Guided Disc Expansion Bearing, Type EE added. Updated drafting/detailing with current office practice (S&B Volume V – Part 2).
BBD-6/7A&7B	4 of 7	Note 1 changed.
	5 of 7	Note 8: Reference to Special Provisions deleted; now in specs. Note 14 changed.
	6 of 7	Changed sheet number/date.
	7 of 7	Changed sheet number/date.

RETAIN THIS MEMO IN FRONT OF TABLE OF CONTENTS TO VOLUME V – PART 3.

/original signed/
Julius F. J. Völgyi, Jr., P.E.
Assistant State Structure and Bridge Engineer

For: George M. Clendenin, P.E
State Structure and Bridge Engineer

Attachments

COMMONWEALTH of VIRGINIA

DEPARTMENT OF TRANSPORTATION
1401 EAST BROAD STREET
RICHMOND, 23219-2000

PHILIP A. SHUCET
COMMISSIONER

GEORGE M. CLENDENIN
STATE STRUCTURE AND BRIDGE ENGINEER

November 1, 2004

Manual of the Structure and Bridge Division
Volume V – Part 3
Current Details (Standards)

MEMORANDUM

TO: Holders of Volume V – Part 3 --- Current Details

REVISIONS:

The following sheets are revised:

TOC This sheet was previously named "INDEX." Sheets that are intended to be 11 x 17 are marked with an asterisk (*). Note added at the bottom of the sheet to explain asterisk symbol.

INSTR "Instructions" at top of sheet deleted. Added "'GENERAL" to title at bottom of sheet.

NOTE: The borders on all 8 ½ x 11 sheets are now ½" except for the left which is 1". The font has been changed from Universe to Arial. In some instances the NOTES TO DESIGNER may have spilled over to additional sheet(s) due to the changes in the border and font. The 8 ½ x 11 sheets, except those revised above, have not been redistributed. They are available on the Internet..

RETAIN THIS MEMO IN FRONT OF INDEX TO VOLUME V – PART 3.

/original signed/
Julius F. J. Völgyi, Jr., P.E.
Assistant State Structure and Bridge Engineer

For: George M. Clendenin, P.E.
State Structure and Bridge Engineer

Attachments

COMMONWEALTH of VIRGINIA

DEPARTMENT OF TRANSPORTATION
1401 EAST BROAD STREET
RICHMOND, 23219-2000

CHARLES D. NOTTINGHAM
COMMISSIONER

MALCOLM T. KERLEY
STATE STRUCTURE AND BRIDGE ENGINEER

July 2, 2001

Manual of the Structure and Bridge Division
Volume V – Part 3
Current Details (Standards)

MEMORANDUM

TO: Holders of Volume V – Part 3 --- Current Details

NEW ISSUE:

The Manual of the Structure and Bridge Division, Volume V – Part 3 --- Current Details includes standards for approach slabs; bearings; joints; parapets, rails and barriers; fencing details; utilities (gas and water lines, lighting and telephone conduits), etc. The whole set of standards is being reissued with the date of July 2, 2001 (07-02-01) with new border sizes for the plan sheets.

REVISIONS:

This reissue of the current details incorporates the new border sheet and includes an update on drafting and detailing corrections, specification updates, and numerous other corrections/revisions. Standards with a date previous to the July 2, 2001 (07-02-01) issue have been placed in a VOIDED file for archival purposes.

RETAIN THIS MEMO IN FRONT OF INDEX TO VOLUME V – PART 3.

Julius F. J. Völgyi, Jr., P.E.
Assistant State Structure and Bridge Engineer

For: Malcolm T. Kerley, P.E.
State Structure and Bridge Engineer

Attachments

VOLUME V – PART 3
CURRENT DETAILS

TABLE OF CONTENTS

FILE NO.		TITLE	DATE
		TABLE OF CONTENTS & GENERAL INSTRUCTIONS	
TOC-1		Table of Contents	03May2013
TOC-2		Table of Contents	03May2013
TOC-3		Table of Contents	03May2013
TOC-4		Table of Contents	03May2013
TOC-5		Table of Contents	27Mar2013
TOC-6		Table of Contents	07Aug2012
TOC-7		Table of Contents	07Aug2012
TOC-8		Table of Contents	14Dec2012
TOC-9		Table of Contents	14Dec2012
TOC-10		Table of Contents	14Dec2012
TOC-11		Table of Contents	14Dec2012
TOC-12		Table of Contents	14Dec2012
INSTR-1		General Instructions	30Aug2012
INSTR-2		External Users: File Access Instructions	11Jul2008
INSTR-3		External Users: File Access Instructions	11Jul2008
		APPROACH SLABS – APPROACH ROADWAY CONCRETE	
*BAS-11	-1	Straight Crossing	03May2013
	-2	Notes to Designer	31Aug2007
	-DGN	MicroStation Drawing File	
*BAS-12L	-1	Skew 20° or less, skew left	03May2013
	-2	Notes to Designer	31Aug2007
	-DGN	MicroStation Drawing File	
*BAS-12R	-1	Skew 20° or less, skew right	03May2013
	-2	Notes to Designer	31Aug2007
	-DGN	MicroStation Drawing File	
*BAS-13L	-1	Skew 20° to 35°, skew left	03May2013
	-2	Notes to Designer	31Aug2007
	-DGN	MicroStation Drawing File	
*BAS-13R	-1	Skew 20° to 35°, skew right	03May2013
	-2	Notes to Designer	31Aug2007
	-DGN	MicroStation Drawing File	
*BAS-14L	-1	Skew 35° to 45°, skew left	03May2013
	-2	Notes to Designer	31Aug2007
	-DGN	MicroStation Drawing File	
*BAS-14R	-1	Skew 35° to 45°, skew right	03May2013
	-2	Notes to Designer	31Aug2007
	-DGN	MicroStation Drawing File	

*Indicates 11x17 sheet, all others are 8 ½ x 11.

VOLUME V – PART 3
CURRENT DETAILS

TABLE OF CONTENTS (cont'd)

FILE NO.		TITLE	DATE
		APPROACH SLABS – APPROACH ROADWAY CONCRETE (cont'd)	
*BAS-15L	-1	Skew 45° to 50°, skew left	03May2013
	-2	Notes to Designer	31Aug2007
	-DGN	MicroStation Drawing File	
*BAS-15R	-1	Skew 45° to 50°, skew right	03May2013
	-2	Notes to Designer	31Aug2007
	-DGN	MicroStation Drawing File	
		APPROACH SLABS – STRUCTURE WITH SIDEWALKS APPROACH ROADWAY CONCRETE	
*BAS-16	-1	Straight Crossing	03May2013
	-2	Notes to Designer	31Aug2007
	-DGN	MicroStation Drawing File	
*BAS-17L	-1	Skew 20° or less, skew left	03May2013
	-2	Notes to Designer	31Aug2007
	-DGN	MicroStation Drawing File	
*BAS-17R	-1	Skew 20° or less, skew right	03May2013
	-2	Notes to Designer	31Aug2007
	-DGN	MicroStation Drawing File	
*BAS-18L	-1	Skew 20° to 35°, skew left	03May2013
	-2	Notes to Designer	31Aug2007
	-DGN	MicroStation Drawing File	
*BAS-18R	-1	Skew 20° to 35°, skew right	03May2013
	-2	Notes to Designer	31Aug2007
	-DGN	MicroStation Drawing File	
*BAS-19L	-1	Skew 35° to 45°, skew left.	03May2013
	-2	Notes to Designer	31Aug2007
	-DGN	MicroStation Drawing File	
*BAS-19R	-1	Skew 35° to 45°, skew right	03May2013
	-2	Notes to Designer	31Aug2007
	-DGN	MicroStation Drawing File	
*BAS-20L	-1	Skew 45° to 50°, skew left	03May2013
	-2	Notes to Designer	31Aug2007
	-DGN	MicroStation Drawing File	
*BAS-20R	-1	Skew 45° to 50°, skew right	03May2013
	-2	Notes to Designer	31Aug2007
	-DGN	MicroStation Drawing File	

*Indicates 11x17 sheet, all others are 8 ½ x 11.

VOLUME V – PART 3
CURRENT DETAILS

TABLE OF CONTENTS (cont'd)

FILE NO.		TITLE	DATE
		APPROACH SLABS – WITH BITUMINOUS CONCRETE OVERLAY	
*BAS-11A	-1	Straight Crossing	03May2013
	-2	Notes to Designer	31Aug2007
	-DGN	MicroStation Drawing File	
*BAS-12AL	-1	Skew 20° or less, skew left	03May2013
	-2	Notes to Designer	31Aug2007
	-DGN	MicroStation Drawing File	
*BAS-12AR	-1	Skew 20° or less, skew right	03May2013
	-2	Notes to Designer	31Aug2007
	-DGN	MicroStation Drawing File	
*BAS-13AL	-1	Skew 20° to 35°, skew left	03May2013
	-2	Notes to Designer	31Aug2007
	-DGN	MicroStation Drawing File	
*BAS-13AR	-1	Skew 20° to 35°, skew right	03May2013
	-2	Notes to Designer	31Aug2007
	-DGN	MicroStation Drawing File	
*BAS-14AL	-1	Skew 35° to 45°, skew left	03May2013
	-2	Notes to Designer	31Aug2007
	-DGN	MicroStation Drawing File	
*BAS-14AR	-1	Skew 35° to 45°, skew right	03May2013
	-2	Notes to Designer	31Aug2007
	-DGN	MicroStation Drawing File	
*BAS-15AL	-1	Skew 45° to 50°, skew left	03May2013
	-2	Notes to Designer	31Aug2007
	-DGN	MicroStation Drawing File	
*BAS-15AR	-1	Skew 45° to 50°, skew right	03May2013
	-2	Notes to Designer	31Aug2007
	-DGN	MicroStation Drawing File	
		APPROACH SLABS – STRUCTURE WITH SIDEWALKS WITH BITUMINOUS CONCRETE OVERLAY	
*BAS-16A	-1	Straight Crossing	03May2013
	-2	Notes to Designer	31Aug2007
	-DGN	MicroStation Drawing File	
*BAS-17AL	-1	Skew 20° or less, skew left	03May2013
	-2	Notes to Designer	31Aug2007
	-DGN	MicroStation Drawing File	

*Indicates 11x17 sheet, all others are 8 ½ x 11.

VOLUME V – PART 3
CURRENT DETAILS

TABLE OF CONTENTS (cont'd)

FILE NO.		TITLE	DATE
		APPROACH SLABS – STRUCTURE WITH SIDEWALKS WITH BITUMINOUS CONCRETE OVERLAY (cont'd)	
*BAS-17AR	-1	Skew 20° or less, skew right	03May2013
	-2	Notes to Designer	31Aug2007
	-DGN	MicroStation Drawing File	
*BAS-18AL	-1	Skew 20° to 35°, skew left	03May2013
	-2	Notes to Designer	31Aug2007
	-DGN	MicroStation Drawing File	
*BAS-18AR	-1	Skew 20° to 35°, skew right	03May2013
	-2	Notes to Designer	31Aug2007
	-DGN	MicroStation Drawing File	
*BAS-19AL	-1	Skew 35° to 45°, skew left	03May2013
	-2	Notes to Designer	31Aug2007
	-DGN	MicroStation Drawing File	
*BAS-19AR	-1	Skew 35° to 45°, skew right	03May2013
	-2	Notes to Designer	31Aug2007
	-DGN	MicroStation Drawing File	
*BAS-20AL	-1	Skew 45° to 50°, skew left	03May2013
	-2	Notes to Designer	31Aug2007
	-DGN	MicroStation Drawing File	
*BAS-20AR	-1	Skew 45° to 50°, skew right	03May2013
	-2	Notes to Designer	31Aug2007
	-DGN	MicroStation Drawing File	
		BEARING DETAILS	
*BBD-6	-1	High Load Multi-Rotational Bearings – Fixed	14Jun2010
*BBD-7A	-2	High Load Multi-Rotational Bearings – Guided Exp	14Jun2010
*BBD-7B	-3	High Load Multi-Rotational Bearings – Non-Guided Exp.	14Jun2010
*BBD-6/7A/7B	-4	Notes to Designer	31Aug2007
	-5	Notes to Designer	31Aug2007
	-6	Notes to Designer	31Aug2007
	-7	Notes to Designer	31Aug2007
	-DGN	MicroStation Drawing File (3 Drawing Files)	
*BBD-8	-1	Laminated Elastomeric Pad for Prestressed Beams	07Aug2012
	-2	Notes to Designer	29May2009
	-DGN	MicroStation Drawing File	
*BBD-9	-1	Laminated Elastomeric Pad for Steel Beams/Girders	14Jun2010
	-2	Notes to Designer	29May2009
	-DGN	MicroStation Drawing File	

*Indicates 11x17 sheet, all others are 8 ½ x 11.

VOLUME V – PART 3
CURRENT DETAILS

TABLE OF CONTENTS (cont'd)

FILE NO.		TITLE	DATE
		CROSS FRAME DETAILS	
*BCF-4	-1	Cross Frame Details (for Straight Girders, V-Bracing)	27Mar2013
	-2	Notes to Designer	27Mar2013
	-DGN	MicroStation Drawing File	
*BCF-5	-1	Cross Frame Details (for Straight Girders, X-Bracing)	27Mar2013
	-2	Notes to Designer	27Mar2013
	-DGN	MicroStation Drawing File	
		CONCRETE RAILING (KANSAS CORRAL)	
*BCR-3	-1	Railing With Curbing (2'-8" height)	14Dec2012
	-2	Notes to Designer	14Dec2012
	-DGN	MicroStation Drawing File	
*BCR-4	-1	Railing Without Curbing (2'-8" height)	14Dec2012
	-2	Notes to Designer	14Dec2012
	-DGN	MicroStation Drawing File	
*BCR-6	-1	Cast-in-Place Terminal Wall on Wingwall (2'-8" height)	14Dec2012
	-2	Notes to Designer	14Dec2012
	-DGN	MicroStation Drawing File	
*BCR-7	-1	Cast-in-Place Terminal Wall on U-Back Wingwall (2'-8" height)	14Dec2012
	-2	Notes to Designer	14Dec2012
	-DGN	MicroStation Drawing File	
*BCR-8	-1	Cast-in-Place Terminal Wall on Superstructure (Integral and Semi-Integral) (2'-8" height)	14Dec2012
	-2	Notes to Designer	14Dec2012
	-DGN	MicroStation Drawing File	
*BCR-9	-1	Cast-in-Place Terminal Wall on Superstructure (Deck Slab Extension) (2'-8" height)	14Dec2012
	-2	Notes to Designer	14Dec2012
	-3	Notes to Designer	06Apr2012
	-DGN	MicroStation Drawing File	

*Indicates 11x17 sheet, all others are 8 ½ x 11.

VOLUME V – PART 3
CURRENT DETAILS

TABLE OF CONTENTS (cont'd)

FILE NO.		TITLE	DATE
		BRIDGE CONDUIT/FUTURE LIGHTING	
*BCS-21A	-1	Bridge Conduit System for Future Lighting with type KC(A) parapet (F-shape).	14Jun2010
	-2	Notes to Designer	31Aug2007
	-3	Notes to Designer	31Aug2007
	-DGN	MicroStation Drawing File	
*BCS-22A	-1	Bridge Conduit System other than bridge lighting for type KC(A)parapet (F-shape). Access to junction box from outside of parapet.	14Jun2010
	-2	Notes to Designer	31Aug2007
	-DGN	MicroStation Drawing File	
*BCS-28A	-1	Bridge Conduit System for Lighting with type KC(A) parapet (F-shape). Access to junction box from roadway.	07Aug2012
	-2	Notes to Designer	31Aug2007
	-3	Notes to Designer	07Aug2012
	-DGN	MicroStation Drawing File	
*BCS-29A	-1	Bridge Conduit System for other than bridge lighting. Access to junction box from roadway. Parapet F-shape	14Jun2010
	-2	Notes to Designer	31Aug2007
	-DGN	MicroStation Drawing File	
*BCS-30A	-1	Bridge Conduit System for lighting with BR27C-series Railing without sidewalk	07Aug2012
	-2	Notes to Designer	11Jul2008
	-3	Notes to Designer	07Aug2012
	-DGN	MicroStation Drawing File	
*BCS-31A	-1	Bridge Conduit System for lighting with BR27C-series Railing with sidewalk	07Aug2012
	-2	Notes to Designer	11Jul2008
	-3	Notes to Designer	07Aug2012
	-DGN	MicroStation Drawing File	
*BCS-32A	-1	Bridge Conduit System for lighting with BR27D-series Railing without sidewalk	07Aug20122
	-2	Notes to Designer	11Jul2008
	-3	Notes to Designer	07Aug2012
	-DGN	MicroStation Drawing File	
*BCS-33A	-1	Bridge Conduit System for lighting with BR27D-series Railing with sidewalk	07Aug2012
	-2	Notes to Designer	11Jul2008
	-3	Notes to Designer	07Aug2012
	-DGN	MicroStation Drawing File	

*Indicates 11x17 sheet, all others are 8 ½ x 11.

VOLUME V – PART 3
CURRENT DETAILS

TABLE OF CONTENTS (cont'd)

FILE NO.		TITLE	DATE
		JOINTS	
*BEJ-1	-1	Elastomeric Joint Sealer, Straight Crossing and Skewed Crossing Under 20°	14Jun2010
	-2	Notes to Designer	31Aug2007
	-DGN	MicroStation Drawing File	
*BEJ-2	-1	Elastomeric Joint Sealer, Skewed Crossing Over 20°	14Jun2010
	-2	Notes to Designer	31Aug2007
	-DGN	MicroStation Drawing File	
*BEJ-3	-1	Elastomeric Expansion Dam	14Jun2010
	-2	Notes to Designer	31Aug2007
	-3	Notes to Designer	31Aug2007
	-4	Notes to Designer	31Aug2007
	-DGN	MicroStation Drawing File	
*BEJ-6	-1	Tooth Expansion Joint, Steel Beams/Girders	14Jun2010
*BEJ-7	-2	Tooth Expansion Joint, Concrete Beams	14Jun2010
*BEJ-10	-3	Tooth Expansion Joint – Miscellaneous Details	14Jun2010
*BEJ-11	-4	Tooth Expansion Joint – Miscellaneous Details	14Jun2010
*BEJ-12	-5	Tooth Expansion Joint – Miscellaneous Details	14Jun2010
BEJ-6/7/10/11/12			
	-6	Notes to Designer	14Jun2010
	-7	Notes to Designer	29May2009
	-8	Notes to Designer	29May2009
	-9	Notes to Designer	29May2009
	-10	Notes to Designer	29May2009
	-11	Notes to Designer	29May2009
	-DGN	MicroStation Drawing File (5 Drawing Files)	
		GAS LINES	
*BGL-1	-1	For Use with Steel Beams/Girders	07Aug2012
	-2	Notes to Designer	29May2009
	-DGN	MicroStation Drawing File	
*BGL-2	-1	For Use with Concrete Beams	07Aug2012
	-2	Notes to Designer	29May2009
	-DGN	MicroStation Drawing File	

*Indicates 11x17 sheet, all others are 8 ½ x 11.

VOLUME V – PART 3
CURRENT DETAILS

TABLE OF CONTENTS (cont'd)

FILE NO.		TITLE	DATE
		STEEL RAILING (ILLINOIS 2399)	
*BIR-1	-1	Railing with Terminal Wall on U-Back Wingwall	14Dec2012
	-2	Notes to Designer	14Dec2012
	-3	Notes to Designer	14Dec2012
	-DGN	MicroStation Drawing File	
*BIR-2	-1	Railing with Terminal Wall on Wingwall	14Dec2012
	-2	Notes to Designer	14Dec2012
	-3	Notes to Designer	14Dec2012
	-DGN	MicroStation Drawing File	
*BIR-3	-1	Railing – Miscellaneous Details	14Dec2012
	-2	Notes to Designer	07Aug2012
	-DGN	MicroStation Drawing File	
*BIR-4	-1	Railing with Terminal Wall on Superstructure (Integral and Semi-Integral)	14Dec2012
	-2	Notes to Designer	14Dec2012
	-3	Notes to Designer	14Dec2012
	-DGN	MicroStation Drawing File	
*BIR-5	-1	Railing with Terminal Wall on Superstructure (Deck Slab Extensions)	14Dec2012
	-2	Notes to Designer	14Dec2012
	-3	Notes to Designer	14Dec2012
	-DGN	MicroStation Drawing File	
		MEDIAN BARRIER DETAILS	
*BMB-3A	-1	Cast-in-Place Concrete Median Barrier (F-Shape)	14Dec2012
	-2	Notes to Designer	14Dec2012
	-DGN	MicroStation Drawing File	
*BMB-5A	-1	Cast-in-Place Concrete Median Barrier (F-Shape) (Split Barrier)	14Dec2012
	-2	Notes to Designer	14Dec2012
	-DGN	MicroStation Drawing File	

*Indicates 11x17 sheet, all others are 8 ½ x 11.

VOLUME V – PART 3
CURRENT DETAILS

TABLE OF CONTENTS (cont'd)

FILE NO.		TITLE	DATE
		PARAPET DETAILS (F-Shape)	
*BPB-3A	-1	F-Shape with Terminal Wall on U-Back Wingwall	14Dec2012
	-2	Notes to Designer	14Dec2012
	-DGN	MicroStation Drawing File	
*BPB-3B	-1	F-Shape with Terminal Wall on Wingwall	14Dec2012
	-2	Notes to Designer	14Dec2012
	-DGN	MicroStation Drawing File	
*BPB-3C	-1	F-Shape with Terminal Wall on Superstructure (Integral and Semi- Integral)	14Dec2012
	-2	Notes to Designer	14Dec2012
	-DGN	MicroStation Drawing File	
*BPB-3D	-1	F-Shape with Terminal Wall on Superstructure (Deck Slab Extensions).	14Dec2012
	-2	Notes to Designer	14Dec2012
	-3	Notes to Designer	14Dec2012
	-DGN	MicroStation Drawing File	
		PEDESTRIAN FENCE DETAILS	
*BPF-3	-1	For Use with F-Shape Parapet (BPB-3A/3B)	14Dec2012
	-2	Notes to Designer	14Jun2010
	-DGN	MicroStation Drawing File	
*BPF-4	-1	For Use with BR27C-series and BR27D-series Railing without sidewalk	14Dec2012
	-2	Notes to Designer	14Jun2010
	-DGN	MicroStation Drawing File	
*BPF-5	-1	For Use with BR27C-series and BR27D-series Railing with sidewalk	14Dec2012
	-2	Notes to Designer	14Jun2010
	-DGN	MicroStation Drawing File	
		PRESTRESSED CONCRETE PILES	
*BPP-1	-1	Prestressed Square Concrete Piles: 10" to 24"	07Aug2012
	-2	Notes to Designer	31Aug2007
	-DGN	MicroStation Drawing File	
		PIER PROTECTION SYSTEM	
*BPPS-1	-1	Pier Protection System for Pier Column/Stem Clearances < 10'-0"	14Dec2012
	-2	Notes to Designer	14Dec2012
	-3	Notes to Designer	14Dec2012
	-DGN	MicroStation Drawing File	

*Indicates 11x17 sheet, all others are 8 ½ x 11.

VOLUME V – PART 3
CURRENT DETAILS

TABLE OF CONTENTS (cont'd)

FILE NO.		TITLE	DATE
		PIER PROTECTION SYSTEM (cont'd)	
*BPPS-2	-1	For Use with standard BPPS-1	14Dec2012
	-2	Notes to Designers	14Dec2012
	-DGN	MicroStation Drawing File	
*BPPS-3	-1	Pier Protection System for Pier Column/Stem Clearances ≥ 10'-0" but ≤ 30'-0"	14Dec2012
	-2	Notes to Designer	14Dec2012
	-3	Notes to Designer	14Dec2012
	-DGN	MicroStation Drawing File	
		STEEL RAILING (BR27C-SERIES)	
*BR27C-12	-1	Railing (3'-6") as Traffic Barrier	14Dec2012
	-2	Notes to Designer	14Dec2012
	-3	Notes to Designer	14Dec2012
	-DGN	MicroStation Drawing File	
*BR27C-13	-1	Railing (4'-6") on Traffic Side, SUP Space.	14Dec2012
	-2	Notes to Designer	06Apr2012
	-3	Notes to Designer	14Dec2012
	-DGN	MicroStation Drawing File	
*BR27C-14	-1	Railing (4'-6") on Outside, SUP Space	14Dec2012
	-2	Notes to Designer	14Dec2012
	-3	Notes to Designer	14Dec2012
	-DGN	MicroStation Drawing File	
*BR27C-15	-1	Railing (4'-6") on Raised Sidewalk	14Dec2012
	-2	Notes to Designer	14Dec2012
	-3	Notes to Designer	14Dec2012
	-DGN	MicroStation Drawing File	
*BR27C-16	-1	Railing Splice/Expansion Details.	07Aug2012
	-2	Notes to Designer	06Apr2012
	-DGN	MicroStation Drawing File	
		STEEL RAILING (BR27D-SERIES)	
*BR27D-8	-1	Railing (3'-6") as Traffic Barrier	14Dec2012
	-2	Notes to Designer	14Dec2012
	-3	Notes to Designer	14Dec2012
	-DGN	MicroStation Drawing File	
*BR27D-9	-1	Railing (4'-6") on Traffic Side, SUP Space	14Dec2012
	-2	Notes to Designer	06Apr2012
	-3	Notes to Designer	14Dec2012
	-DGN	MicroStation Drawing File	

*Indicates 11x17 sheet, all others are 8 ½ x 11.

VOLUME V – PART 3
CURRENT DETAILS

TABLE OF CONTENTS (cont'd)

FILE NO.		TITLE	DATE
		STEEL RAILING (BR27D-SERIES) (Cont'd)	
*BR27D-10	-1	Railing (4'-6") on Outside, SUP Space or Raised Sidewalk	14Dec2012
	-2	Notes to Designer	06Apr2012
	-3	Notes to Designer	14Dec2012
	-DGN	MicroStation Drawing File	
*BR27D-11	-1	Railing Splice/Expansion Details	07Aug2012
	-2	Notes to Designer	06Apr2012
	-DGN	MicroStation Drawing File	
		STEEL RAILING – TERMINAL WALL (BR27C/BR27D RAILS)	
*BR27T-1	-1	Cast in Place Terminal Wall (3'-6") on U-Back Wingwall	14Dec2012
	-2	Notes to Designer	14Dec2012
	-3	Notes to Designer	06Apr2012
	-DGN	MicroStation Drawing File	
*BR27T-2	-1	Cast in Place Terminal Wall (3'-6") on Wingwall	14Dec2012
	-2	Notes to Designer	14Dec2012
	-3	Notes to Designer	06Apr2012
	-DGN	MicroStation Drawing File	
*BR27T-3	-1	Cast in Place Terminal Wall (3'-6") on Superstructure	14Dec2012
	-2	Notes to Designer	14Dec2012
	-3	Notes to Designer	07Aug2012
	-DGN	MicroStation Drawing File	
*BR27T-4	-1	Cast in Place Terminal Wall (3'-6") on Superstructure	14Dec2012
	-2	Notes to Designer	14Dec2012
	-3	Notes to Designer	07Aug2012
	-DGN	MicroStation Drawing File	
*BR27T-5	-1	Cast in Place Terminal Wall (4'-6") on U-Back Wingwall	14Dec2012
	-2	Notes to Designer	14Dec2012
	-3	Notes to Designer	06Apr2012
	-DGN	MicroStation Drawing File	
*BR27T-6	-1	Cast in Place Terminal Wall (4'-6") on U-Back Wingwall	14Dec2012
	-2	Notes to Designer	14Dec2012
	-3	Notes to Designer	06Apr2012
	-DGN	MicroStation Drawing File	
*BR27T-7	-1	Cast in Place Terminal Wall (4'-6") on Superstructure	14Dec2012
	-2	Notes to Designer	14Dec2012
	-3	Notes to Designer	07Aug2012
	-DGN	MicroStation Drawing File	

*Indicates 11x17 sheet, all others are 8 ½ x 11.

VOLUME V – PART 3
CURRENT DETAILS

TABLE OF CONTENTS (cont'd)

FILE NO.		TITLE	DATE
		STEEL RAILING – TERMINAL WALL (Cont'd) (BR27C/BR27D RAILS)	
*BR27T-8	-1	Cast in Place Terminal Wall (4'-6") on Superstructure	14Dec2012
	-2	Notes to Designer	14Dec2012
	-3	Notes to Designer	07Aug2012
	-DGN	MicroStation Drawing File	
*BR27T-9	-1	Cast in Place Terminal Wall (4'-6") on Approach Slab	14Dec2012
	-2	Notes to Designer	14Dec2012
	-3	Notes to Designer	06Apr2012
	-DGN	MicroStation Drawing File	
		THRIE-BEAM GUARDRAIL	
*BTB-1	-1	Thrie-Beam Guardrail	07Aug2012
	-2	Notes to Designer	02Nov2009
	-DGN	MicroStation Drawing File	
		TELEPHONE CONDUITS	
*BTC-4	-1	PVC Conduit for Use With Steel Beams/Girders	07Aug2012
	-2	Notes to Designer	29May2009
	-DGN	MicroStation Drawing File	
*BTC-5	-1	FRE Conduit for Use With Steel Beams/Girders	07Aug2012
	-2	Notes to Designer	29May2009
	-DGN	MicroStation Drawing File	
*BTC-6	-1	PVC Conduit for Use With Concrete Beams	07Aug2012
	-2	Notes to Designer	29May2009
	-DGN	MicroStation Drawing File	
*BTC-7	-1	FRE Conduit for Use With Concrete Beams	07Aug2012
	-2	Notes to Designer	29May2009
	-DGN	MicroStation Drawing File	
		WATER LINES	
*BWL-1	-1	For Use With Steel Beams/Girders	07Aug2012
	-2	Notes to Designer	29May2009
	-3	Notes to Designer	29May2009
	-DGN	MicroStation Drawing File	
*BWL-2	-1	For Use With Concrete Beams	07Aug2012
	-2	Notes to Designer	29May2009
	-3	Notes to Designer	29May2009
	-DGN	MicroStation Drawing File	

*Indicates 11x17 sheet, all others are 8 ½ x 11.

The current details include miscellaneous standards for approach slabs; bearings; joints; parapets, rails and barriers; fencing details, utilities (gas and water lines, lighting and telephone conduits), etc.

Refer to NOTES TO DESIGNER for specific comments on each standard sheet.

Completion of the project block, title block and lower left corner shall be in accordance with the requirements of File Nos. 04.04-1 thru -2 of the Manual of the Structure and Bridge Division, Volume V - Part 2 and as specified herein.

If a standard sheet is modified by the designer, the letters “MOD.” (without quotes) shall be added behind the standard designation in the lower left portion of the border, e.g., BBD-4 MOD. Completing items on the standard that are indicated in the NOTES TO DESIGNER are not considered to be modifications. Changes/modifications beyond these item(s) must be requested to the State Structure and Bridge Engineer as a design waiver using the Form LD-448 unless noted as a design exception in the Manual of the Structure and Bridge Division, Volume V – Part 2. Design exception must be requested to the State Structure and Bridge Engineer using Form LD-440.

In general, in the title block (lower right hand corner of sheet) Designed, Drawn and Checked are blank and need to be filled in with the appropriate initials. For standard sheets without any design or detailing requirements, Designed, Drawn and Checked are filled in with “S&B DIV.” If the design or details are modified, these fields should be filled in with initials as appropriate.

The CADD standard detail sheets are located in Falcon […\PROJECTS\br-stand\sbr\current] directory (central office environment). The drawing file name for the standard sheet corresponds with the file number (name of standard sheet) as listed in the Table of Contents (minus the dash). For example, standard BAS-11 is drawing bas11.dgn.

For external users, the CADD standard detail sheets are attached to the PDF files for each drawing located on VDOT's Structure and Bridge Division website. The user will need Adobe Reader version 7.0 or higher to be able to access the files. Either click on the DGN link in the table of contents or click on the attachment tab in the PDF file for each standard sheet.

Using either method, the screen will appear similar to that shown below.

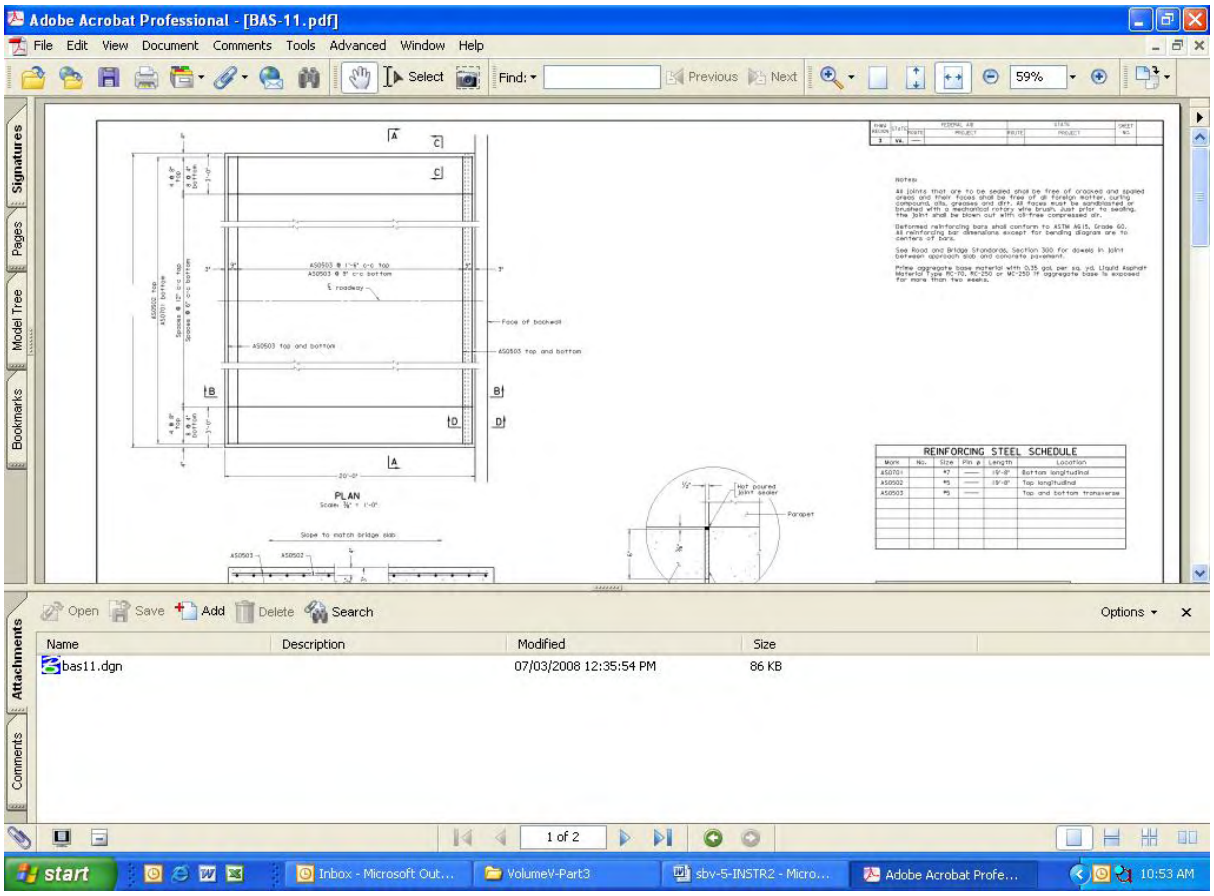

By left clicking on the icon(s), the following menu will appear:

Users may then save the file(s) to their computer.

To simplify printing of this manual, a PDF of the complete manual in one PDF file with no links may be accessed by clicking on the link below.

Full manual no links

If the printer has both 8 ½ x 11 and 11 x 17 paper sizes available, the drawings and notes to designer may be printed on the correct paper size by placing a check next to the item "Choose Paper Source by PDF page size" as shown in the dialog below:

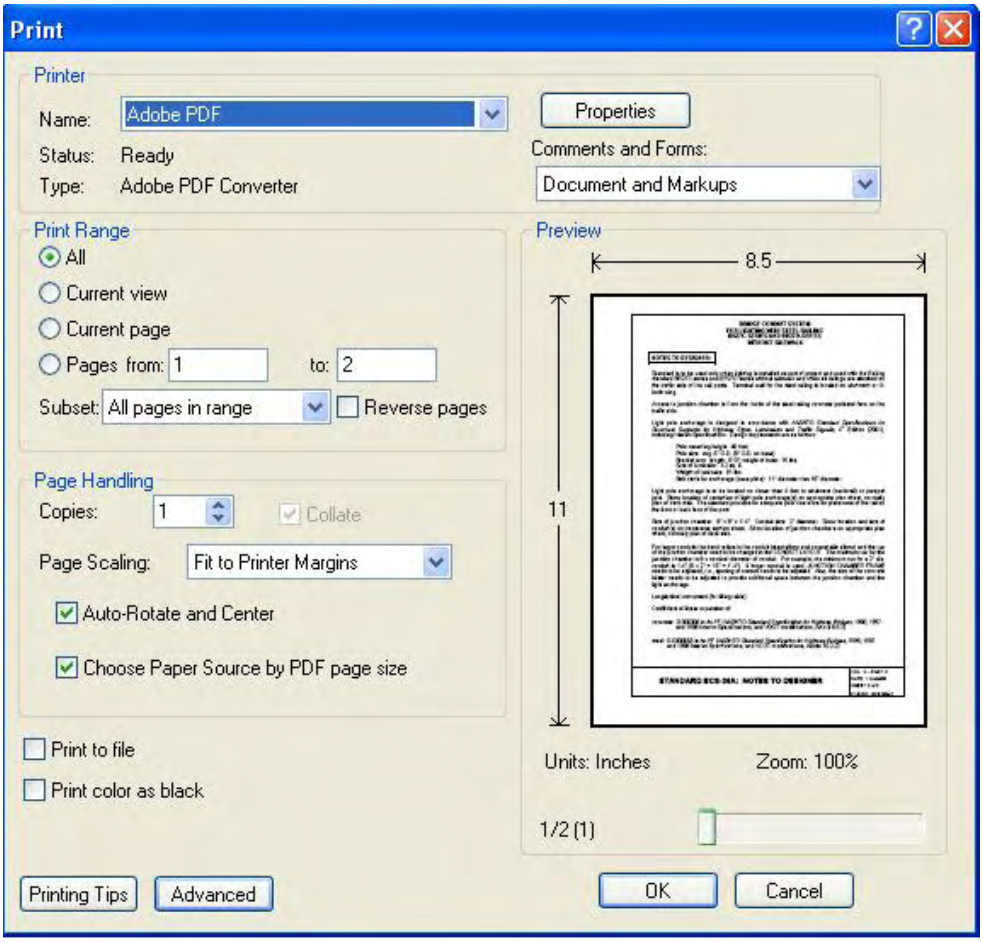

If the printer only has 8 ½ x 11 paper, the drawings will default to the reduced paper size.

Depending on the printer margins, the 11 x 17 drawing(s) may not be true half-size drawing(s).

STATE	FEDERAL AID ROUTE	FEDERAL AID PROJECT	STATE ROUTE	STATE PROJECT	SHEET NO.
VA.	—				

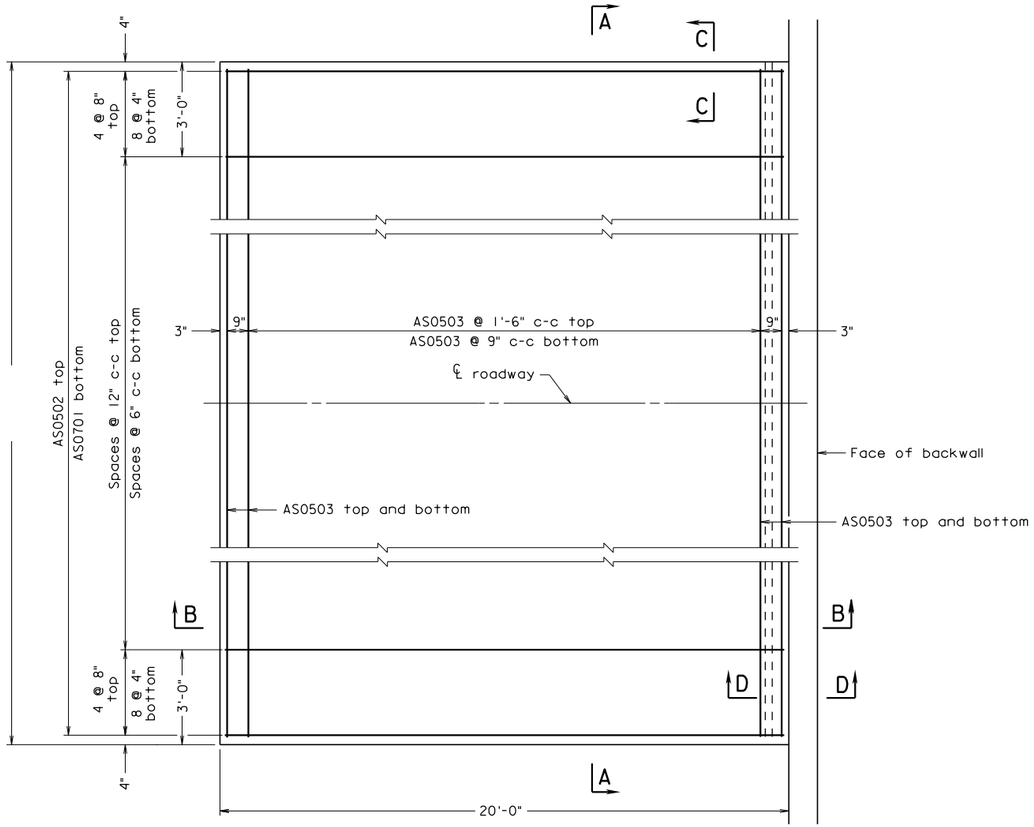

PLAN
Scale: 3/8" = 1'-0"

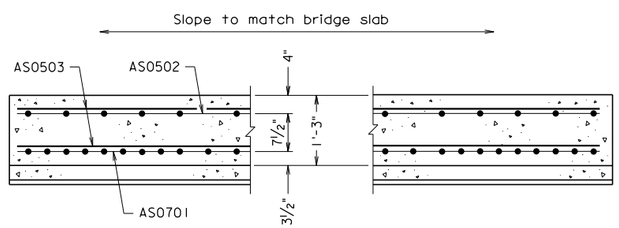

SECTION A-A
Scale: 3/4" = 1'-0"

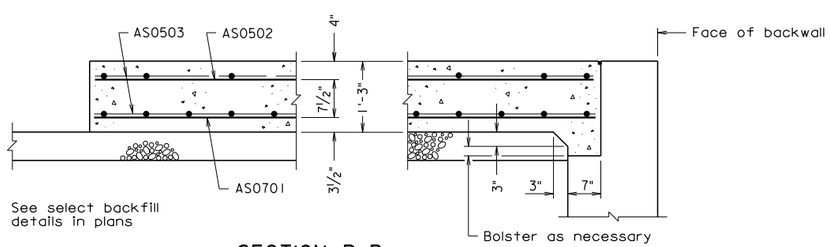

SECTION B-B
Scale: 3/4" = 1'-0"

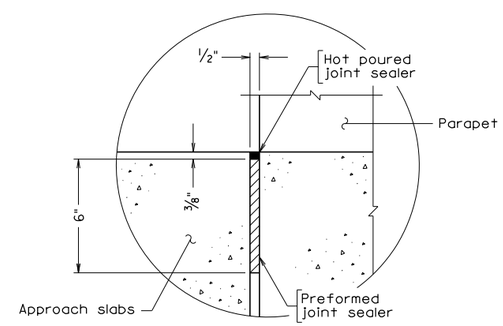

SECTION C-C
Scale: 3" = 1'-0"

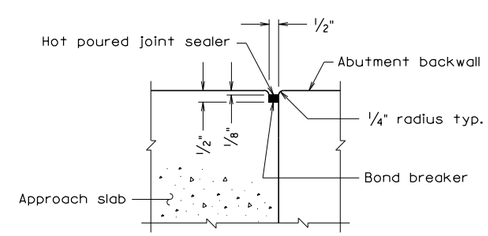

SECTION D-D
Scale: 3" = 1'-0"

Notes:

All joints that are to be sealed shall be free of cracked and spalled areas and their faces shall be free of all foreign matter, curing compound, oils, greases and dirt. All faces must be sandblasted or brushed with a mechanical rotary wire brush. Just prior to sealing, the joint shall be blown out with oil-free compressed air.

Deformed reinforcing bars shall conform to ASTM A615, Grade 60. All reinforcing bar dimensions except for bending diagram are to centers of bars.

See Road and Bridge Standards, Section 300 for dowels in joint between approach slab and concrete pavement.

Prime aggregate base material with 0.35 gal. per sq. yd. Liquid Asphalt Material Type RC-70, RC-250 or MC-250 if aggregate base is exposed for more than two weeks.

Grooving shall be in accordance with VDOT Road and Bridge Specifications, Section 404.07 (f), Class 6, Bridge Deck Finish. Payment for grooving is included in bridge deck grooving quantities.

REINFORCING STEEL SCHEDULE

Mark	No.	Size	Pin ø	Length	Location
AS0701	·	#7	—	19'-8"	Bottom longitudinal
AS0502	·	#5	—	19'-8"	Top longitudinal
AS0503	·	#5	—	·	Top and bottom transverse
·	·	·	·	·	·
·	·	·	·	·	·
·	·	·	·	·	·
·	·	·	·	·	·
·	·	·	·	·	·

ESTIMATED QUANTITIES

	Concrete Class A4 Bridge Approach Slab ⊗ CY	Reinforcing Steel Bridge Approach Slab ⊗ LB
Abutment A	·	·
Abutment B	·	·
Totals	·	·

⊗ Denotes items to be paid for on basis of plan quantities in accordance with current Road and Bridge Specifications.

Scale as noted

© 2013, Commonwealth of Virginia

No.	Description	Date

Revisions

COMMONWEALTH OF VIRGINIA
DEPARTMENT OF TRANSPORTATION

STRUCTURE AND BRIDGE DIVISION

APPROACH SLABS

Designed: S&B DIV
Drawn: S&B DIV
Checked: S&B DIV

Date

Plan No. BAS-11

Sheet No.

bas11.dgn

05-03-2013

BAS-11

Sealed and Signed by:
Julius F.J. Volgyi Jr.
Lic. No. 010487
On the date of
May 3, 2013

A copy of the original sealed and signed standard drawing is on file in the Central Office.

VDOT S&B DIVISION
RICHMOND, VA
STRUCTURAL ENGINEER

APPROACH SLAB

STRAIGHT CROSSING;
APPROACH ROADWAY CONCRETE

NOTES TO DESIGNER:

Standard to be used when approach roadway is concrete (not asphalt concrete).

Standard is for: 0° Skew

ADD THE FOLLOWING NOTES, DIMENSIONS, DETAILS, ETC. TO STANDARD:

PLAN:

Enter width dimension and number of spaces for AS bars (top and bottom). Modify details as needed when using integral abutments, elephant ear wing walls, etc.

REINFORCING STEEL SCHEDULE:

Enter number of bars and length of AS0503 bar.

ESTIMATED QUANTITIES:

Enter concrete and reinforcing steel quantities for Abutments A and B as well as Totals.

STATE	FEDERAL AID ROUTE	FEDERAL AID PROJECT	STATE ROUTE	STATE PROJECT	SHEET NO.
VA.	—				

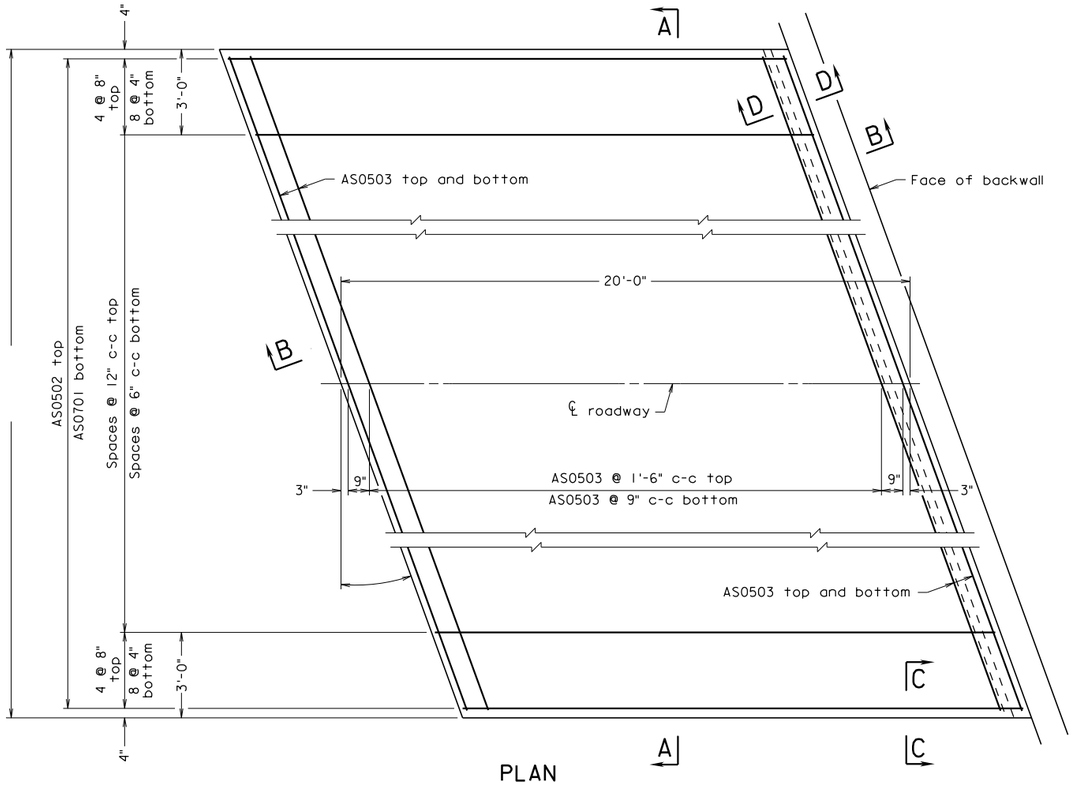

PLAN
Scale: 3/8" = 1'-0"

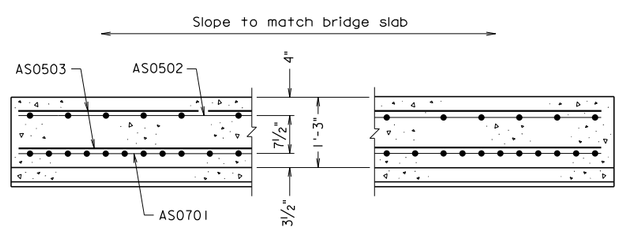

SECTION A-A
Scale: 3/4" = 1'-0"

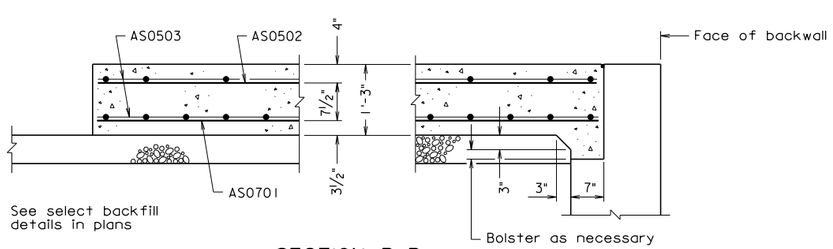

SECTION B-B
Scale: 3/4" = 1'-0"

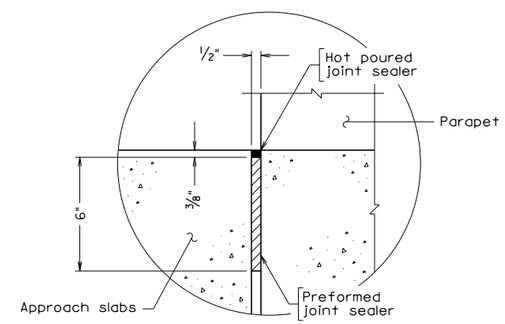

SECTION C-C
Scale: 3" = 1'-0"

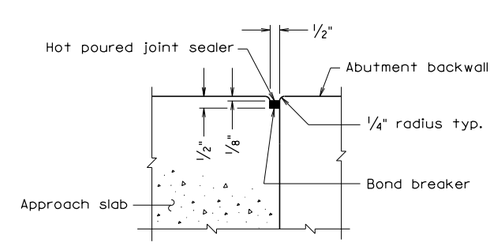

SECTION D-D
Scale: 3" = 1'-0"

Notes:

All joints that are to be sealed shall be free of cracked and spalled areas and their faces shall be free of all foreign matter, curing compound, oils, greases and dirt. All faces must be sandblasted or brushed with a mechanical rotary wire brush. Just prior to sealing, the joint shall be blown out with oil-free compressed air.

Deformed reinforcing bars shall conform to ASTM A615, Grade 60. All reinforcing bar dimensions except for bending diagram are to centers of bars.

See Road and Bridge Standards, Section 300 for dowels in joint between approach slab and concrete pavement.

Prime aggregate base material with 0.35 gal. per sq. yd. Liquid Asphalt Material Type RC-70, RC-250 or MC-250 if aggregate base is exposed for more than two weeks.

Grooving shall be in accordance with VDOT Road and Bridge Specifications, Section 404.07 (f), Class 6, Bridge Deck Finish. Payment for grooving is included in bridge deck grooving quantities.

REINFORCING STEEL SCHEDULE

Mark	No.	Size	Pin ø	Length	Location
AS0701	·	#7	—	19'-8"	Bottom longitudinal
AS0502	·	#5	—	19'-8"	Top longitudinal
AS0503	·	#5	—	·	Top and bottom transverse
·	·	·	·	·	·
·	·	·	·	·	·
·	·	·	·	·	·
·	·	·	·	·	·
·	·	·	·	·	·

ESTIMATED QUANTITIES

	Concrete Class A4 Bridge Approach Slab ⊗ CY	Reinforcing Steel Bridge Approach Slab ⊗ LB
Abutment A	·	·
Abutment B	·	·
Totals	·	·

⊗ Denotes items to be paid for on basis of plan quantities in accordance with current Road and Bridge Specifications.

basl2l.dgn

05-03-2013

BAS-12L

Sealed and Signed by:
Julius F.J. Volgyi Jr.
Lic. No. 010487
On the date of
May 3, 2013

A copy of the original sealed and signed standard drawing is on file in the Central Office.

VDOT S&B DIVISION
RICHMOND, VA
STRUCTURAL ENGINEER

No.	Description	Date

Revisions

Scale as noted

© 2013, Commonwealth of Virginia

COMMONWEALTH OF VIRGINIA
DEPARTMENT OF TRANSPORTATION

STRUCTURE AND BRIDGE DIVISION

APPROACH SLABS

Designed: S&B DIV
Drawn: S&B DIV
Checked: S&B DIV

Date

Plan No. BAS-12L

Sheet No.

APPROACH SLAB

SKEW 20° OR LESS, SKEW LEFT;
APPROACH ROADWAY CONCRETE

NOTES TO DESIGNER:

Standard to be used when approach roadway is concrete (not asphalt concrete).

Standard is for: Skew 20° or less, skew left

ADD THE FOLLOWING NOTES, DIMENSIONS, DETAILS, ETC. TO STANDARD:

PLAN:

Enter skew angle, width dimension and number of spaces for AS bars (top and bottom). Check details of corner(s) where approach slab rests on back of abutment backwall. Modify details as needed when using integral abutments, elephant ear wing walls, etc.

REINFORCING STEEL SCHEDULE:

Enter number of bars and length of AS0503 bar.

ESTIMATED QUANTITIES:

Enter concrete and reinforcing steel quantities for Abutments A and B as well as Totals.

STATE	FEDERAL AID ROUTE	FEDERAL AID PROJECT	STATE ROUTE	STATE PROJECT	SHEET NO.
VA.	—				

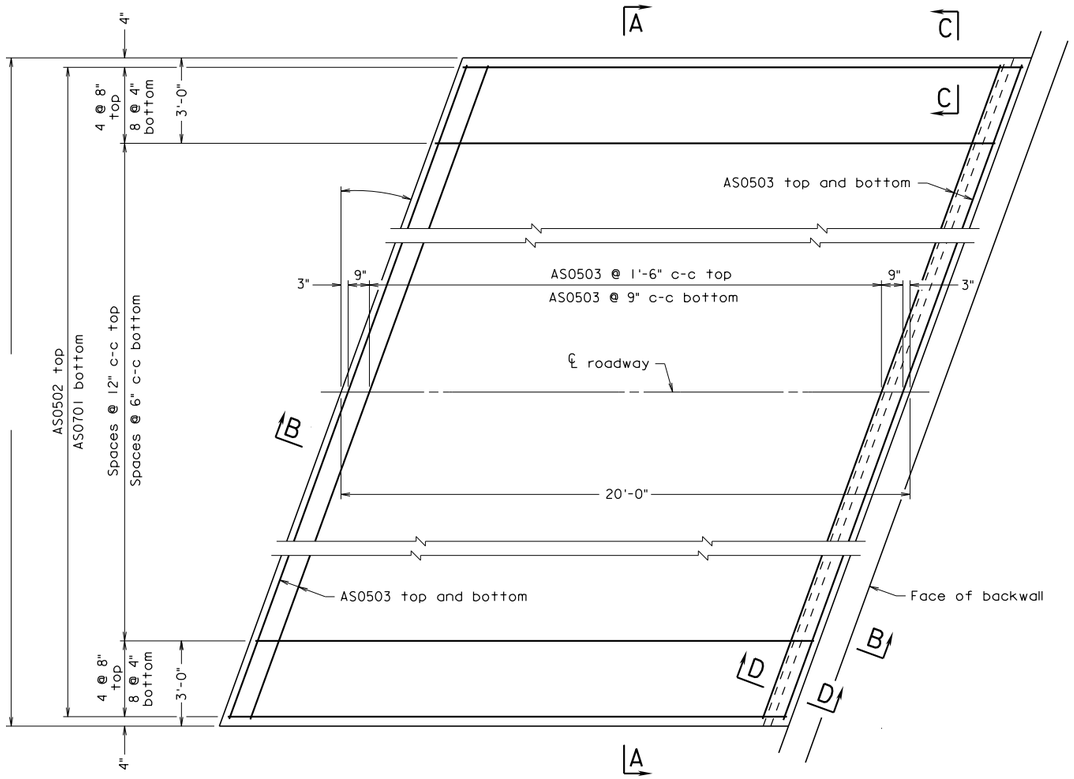

PLAN
Scale: 3/8" = 1'-0"

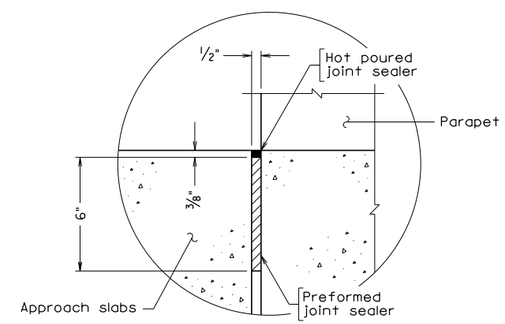

SECTION C-C
Scale: 3" = 1'-0"

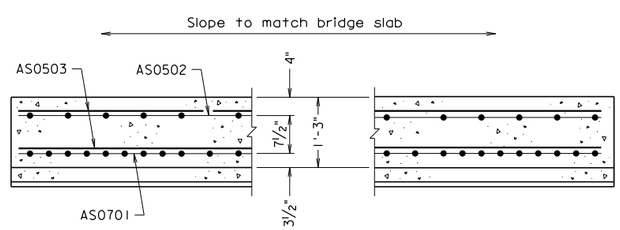

SECTION A-A
Scale: 3/4" = 1'-0"

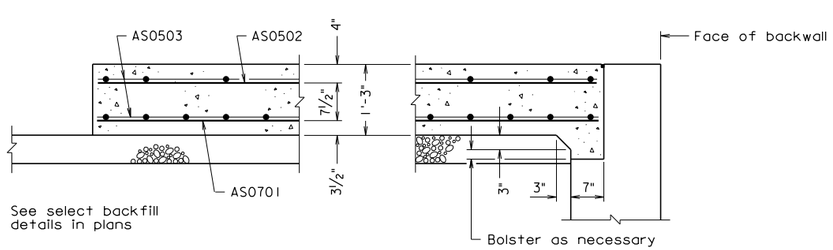

SECTION B-B
Scale: 3/4" = 1'-0"

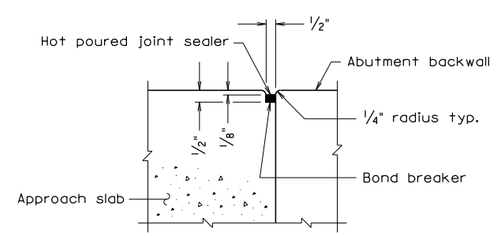

SECTION D-D
Scale: 3" = 1'-0"

Notes:

All joints that are to be sealed shall be free of cracked and spalled areas and their faces shall be free of all foreign matter, curing compound, oils, greases and dirt. All faces must be sandblasted or brushed with a mechanical rotary wire brush. Just prior to sealing, the joint shall be blown out with oil-free compressed air.

Deformed reinforcing bars shall conform to ASTM A615, Grade 60. All reinforcing bar dimensions except for bending diagram are to centers of bars.

See Road and Bridge Standards, Section 300 for dowels in joint between approach slab and concrete pavement.

Prime aggregate base material with 0.35 gal. per sq. yd. Liquid Asphalt Material Type RC-70, RC-250 or MC-250 if aggregate base is exposed for more than two weeks.

Grooving shall be in accordance with VDOT Road and Bridge Specifications, Section 404.07 (f), Class 6, Bridge Deck Finish. Payment for grooving is included in bridge deck grooving quantities.

REINFORCING STEEL SCHEDULE

Mark	No.	Size	Pin ø	Length	Location
AS0701	·	#7	—	19'-8"	Bottom longitudinal
AS0502	·	#5	—	19'-8"	Top longitudinal
AS0503	·	#5	—	·	Top and bottom transverse
·	·	·	·	·	·
·	·	·	·	·	·
·	·	·	·	·	·
·	·	·	·	·	·
·	·	·	·	·	·

ESTIMATED QUANTITIES

	Concrete Class A4 Bridge Approach Slab ⊗ CY	Reinforcing Steel Bridge Approach Slab ⊗ LB
Abutment A	·	·
Abutment B	·	·
Totals	·	·

⊗ Denotes items to be paid for on basis of plan quantities in accordance with current Road and Bridge Specifications.

bas12r.dgn

05-03-2013

BAS-12R

Sealed and Signed by:
Juitus F.J. Valgyi Jr.
Lic. No. 010487
On the date of
May 3, 2013

A copy of the original sealed and signed standard drawing is on file in the Central Office.

VDOT S&B DIVISION
RICHMOND, VA
STRUCTURAL ENGINEER

No.	Description	Date

Revisions

Scale as noted

© 2013, Commonwealth of Virginia

COMMONWEALTH OF VIRGINIA
DEPARTMENT OF TRANSPORTATION

STRUCTURE AND BRIDGE DIVISION

APPROACH SLABS

Designed: S&B DIV
Drawn: S&B DIV
Checked: S&B DIV

Date

Plan No. BAS-12R

Sheet No.

APPROACH SLAB

SKEW 20° OR LESS, SKEW RIGHT;
APPROACH ROADWAY CONCRETE

NOTES TO DESIGNER:

Standard to be used when approach roadway is concrete (not asphalt concrete).

Standard is for: Skew 20° or less, skew right

ADD THE FOLLOWING NOTES, DIMENSIONS, DETAILS, ETC. TO STANDARD:

PLAN:

Enter skew angle, width dimension and number of spaces for AS bars (top and bottom). Check details of corner(s) where approach slab rests on back of abutment backwall. Modify details as needed when using integral abutments, elephant ear wing walls, etc.

REINFORCING STEEL SCHEDULE:

Enter number of bars and length of AS0503 bar.

ESTIMATED QUANTITIES:

Enter concrete and reinforcing steel quantities for Abutments A and B as well as Totals.

STATE	FEDERAL AID ROUTE	FEDERAL AID PROJECT	STATE ROUTE	STATE PROJECT	SHEET NO.
VA.	—				

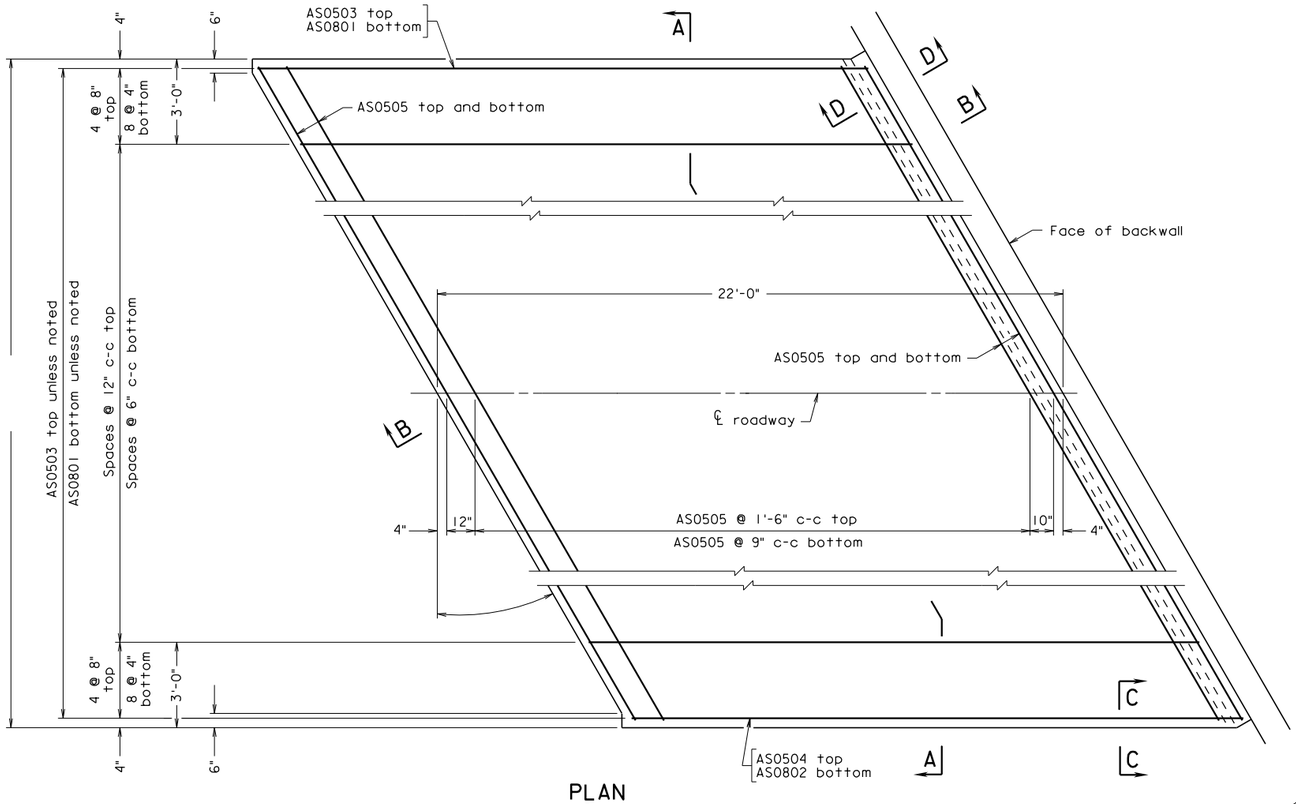

PLAN
Scale: 3/8" = 1'-0"

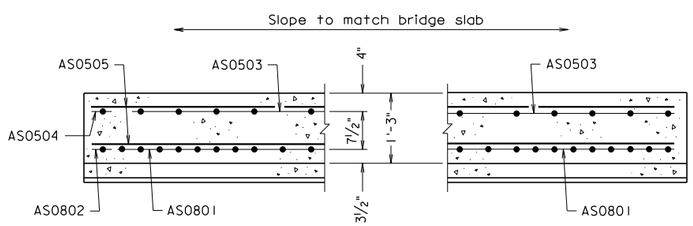

SECTION A-A
Scale: 3/4" = 1'-0"

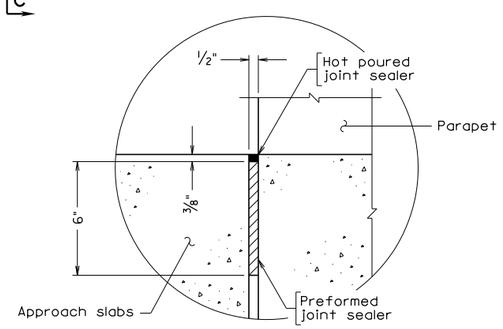

SECTION C-C
Scale: 3" = 1'-0"

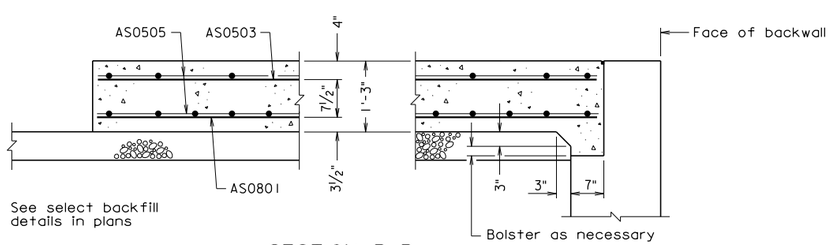

SECTION B-B
Scale: 3/4" = 1'-0"

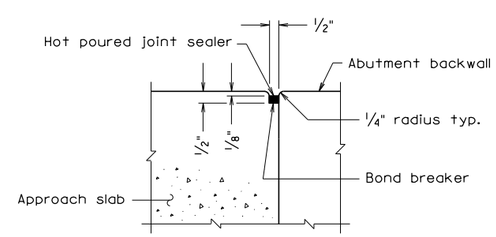

SECTION D-D
Scale: 3" = 1'-0"

Notes:

All joints that are to be sealed shall be free of cracked and spalled areas and their faces shall be free of all foreign matter, curing compound, oils, greases and dirt. All faces must be sandblasted or brushed with a mechanical rotary wire brush. Just prior to sealing, the joint shall be blown out with oil-free compressed air.

Deformed reinforcing bars shall conform to ASTM A615, Grade 60. All reinforcing bar dimensions except for bending diagram are to centers of bars.

See Road and Bridge Standards, Section 300 for dowels in joint between approach slab and concrete pavement.

Prime aggregate base material with 0.35 gal. per sq. yd. Liquid Asphalt Material Type RC-70, RC-250 or MC-250 if aggregate base is exposed for more than two weeks.

Grooving shall be in accordance with VDOT Road and Bridge Specifications, Section 404.07 (f), Class 6, Bridge Deck Finish. Payment for grooving is included in bridge deck grooving quantities.

REINFORCING STEEL SCHEDULE

Mark	No.	Size	Pin ø	Length	Location
AS0801	·	#8	—	21'-6"	Bottom longitudinal
AS0802	·	#8	—	21'-3"	Bottom longitudinal
AS0503	·	#5	—	21'-6"	Top longitudinal
AS0504	·	#5	—	21'-3"	Top longitudinal
AS0505	·	#5	—	·	Top and bottom transverse
·	·	·	·	·	·
·	·	·	·	·	·
·	·	·	·	·	·

ESTIMATED QUANTITIES

	Concrete Class A4 Bridge Approach Slab ⊗ CY	Reinforcing Steel Bridge Approach Slab ⊗ LB
Abutment A	·	·
Abutment B	·	·
Totals	·	·

⊗ Denotes items to be paid for on basis of plan quantities in accordance with current Road and Bridge Specifications.

bas13.dgn

05-03-2013

BAS-13L

Sealed and Signed by: Julius F.J. Volgyi Jr. Lic. No. 010487 On the date of May 3, 2013

A copy of the original sealed and signed standard drawing is on file in the Central Office.

VDOT S&B DIVISION
RICHMOND, VA
STRUCTURAL ENGINEER

No.	Description	Date
	Revisions	

Scale as noted

© 2013, Commonwealth of Virginia

COMMONWEALTH OF VIRGINIA
DEPARTMENT OF TRANSPORTATION

STRUCTURE AND BRIDGE DIVISION

APPROACH SLABS

Designed: S&B DIV
Drawn: S&B DIV
Checked: S&B DIV

Date

Plan No. BAS-13L

Sheet No.

APPROACH SLAB

SKEW OVER 20° to 35°, SKEW LEFT;
APPROACH ROADWAY CONCRETE

NOTES TO DESIGNER:

Standard to be used when approach roadway is concrete (not asphalt concrete).

Standard is for: Skew 20° to 35°, skew left

ADD THE FOLLOWING NOTES, DIMENSIONS, DETAILS, ETC. TO STANDARD:

PLAN:

Enter skew angle, width dimension and number of spaces for AS bars (top and bottom). Check details of corner(s) where approach slab rests on back of abutment backwall. Modify details as needed when using integral abutments, elephant ear wing walls, etc.

REINFORCING STEEL SCHEDULE:

Enter number of bars and length of AS0505 bar.

ESTIMATED QUANTITIES:

Enter concrete and reinforcing steel quantities for Abutments A and B as well as Totals.

STATE	FEDERAL AID ROUTE	FEDERAL AID PROJECT	STATE ROUTE	STATE PROJECT	SHEET NO.
VA.	—				

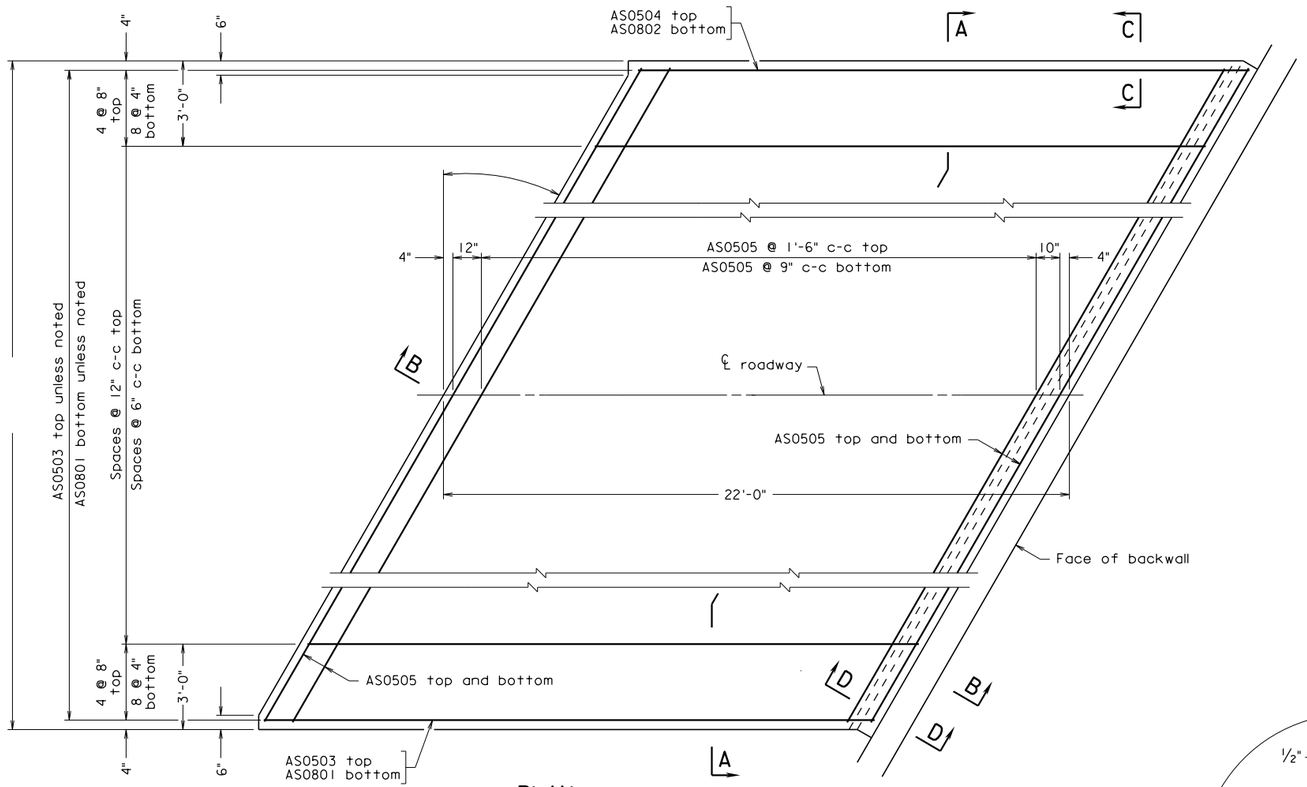

PLAN
Scale: 3/8" = 1'-0"

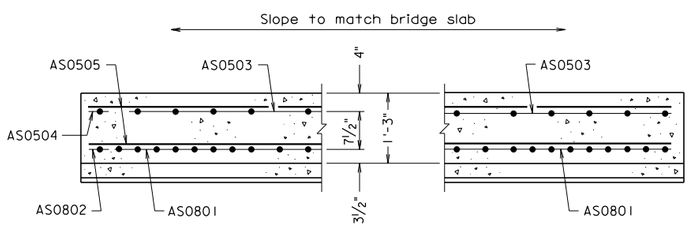

SECTION A-A
Scale: 3/4" = 1'-0"

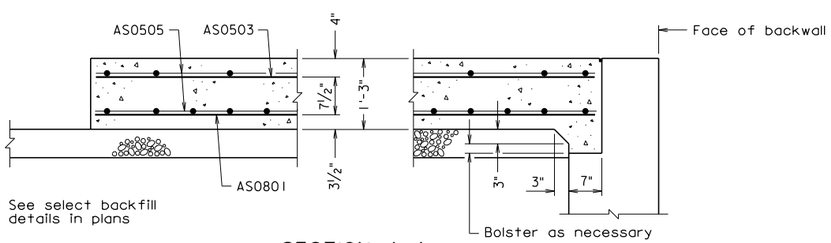

SECTION A-A
Scale: 3/4" = 1'-0"

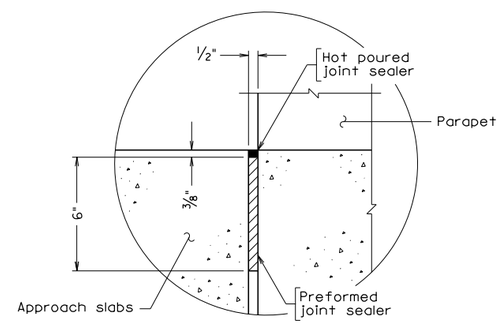

SECTION C-C
Scale: 3" = 1'-0"

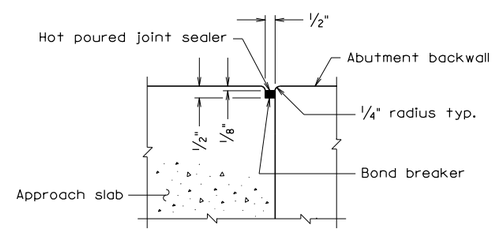

SECTION D-D
Scale: 3" = 1'-0"

Notes:

All joints that are to be sealed shall be free of cracked and spalled areas and their faces shall be free of all foreign matter, curing compound, oils, greases and dirt. All faces must be sandblasted or brushed with a mechanical rotary wire brush. Just prior to sealing, the joint shall be blown out with oil-free compressed air.

Deformed reinforcing bars shall conform to ASTM A615, Grade 60. All reinforcing bar dimensions except for bending diagram are to centers of bars.

See Road and Bridge Standards, Section 300 for dowels in joint between approach slab and concrete pavement.

Prime aggregate base material with 0.35 gal. per sq. yd. Liquid Asphalt Material Type RC-70, RC-250 or MC-250 if aggregate base is exposed for more than two weeks.

Grooving shall be in accordance with VDOT Road and Bridge Specifications, Section 404.07 (f), Class 6, Bridge Deck Finish. Payment for grooving is included in bridge deck grooving quantities.

REINFORCING STEEL SCHEDULE

Mark	No.	Size	Pin ø	Length	Location
AS0801	·	#8	—	21'-6"	Bottom longitudinal
AS0802	·	#8	—	21'-3"	Bottom longitudinal
AS0503	·	#5	—	21'-6"	Top longitudinal
AS0504	·	#5	—	21'-3"	Top longitudinal
AS0505	·	#5	—	·	Top and bottom transverse
·	·	·	·	·	·
·	·	·	·	·	·
·	·	·	·	·	·

ESTIMATED QUANTITIES

	Concrete Class A4 Bridge Approach Slab ⊗ CY	Reinforcing Steel Bridge Approach Slab ⊗ LB
Abutment A	·	·
Abutment B	·	·
Totals	·	·

⊗ Denotes items to be paid for on basis of plan quantities in accordance with current Road and Bridge Specifications.

Scale as noted

©2013, Commonwealth of Virginia

No.	Description	Date
	Revisions	

COMMONWEALTH OF VIRGINIA
DEPARTMENT OF TRANSPORTATION

STRUCTURE AND BRIDGE DIVISION

APPROACH SLABS

Designed: S&B DIV
Drawn: S&B DIV
Checked: S&B DIV

Date

Plan No. BAS-13R

Sheet No.

bas13r.dgn

05-03-2013

Sealed and Signed by:
Julius F.J. Volgyi Jr.
Lic. No. 010487
On the date of
May 3, 2013

A copy of the original sealed and signed standard drawing is on file in the Central Office.

VDOT S&B DIVISION
RICHMOND, VA
STRUCTURAL ENGINEER

BAS-13R

APPROACH SLAB

SKEW OVER 20° to 35°, SKEW RIGHT;
APPROACH ROADWAY CONCRETE

NOTES TO DESIGNER:

Standard to be used when approach roadway is concrete (not asphalt concrete).

Standard is for: Skew 20° to 35°, skew right

ADD THE FOLLOWING NOTES, DIMENSIONS, DETAILS, ETC. TO STANDARD:

PLAN:

Enter skew angle, width dimension and number of spaces for AS bars (top and bottom). Check details of corner(s) where approach slab rests on back of abutment backwall. Modify details as needed when using integral abutments, elephant ear wing walls, etc.

REINFORCING STEEL SCHEDULE:

Enter number of bars and length of AS0505 bar.

ESTIMATED QUANTITIES:

Enter concrete and reinforcing steel quantities for Abutments A and B as well as Totals.

STATE	FEDERAL AID ROUTE	FEDERAL AID PROJECT	STATE ROUTE	STATE PROJECT	SHEET NO.
VA.	—				

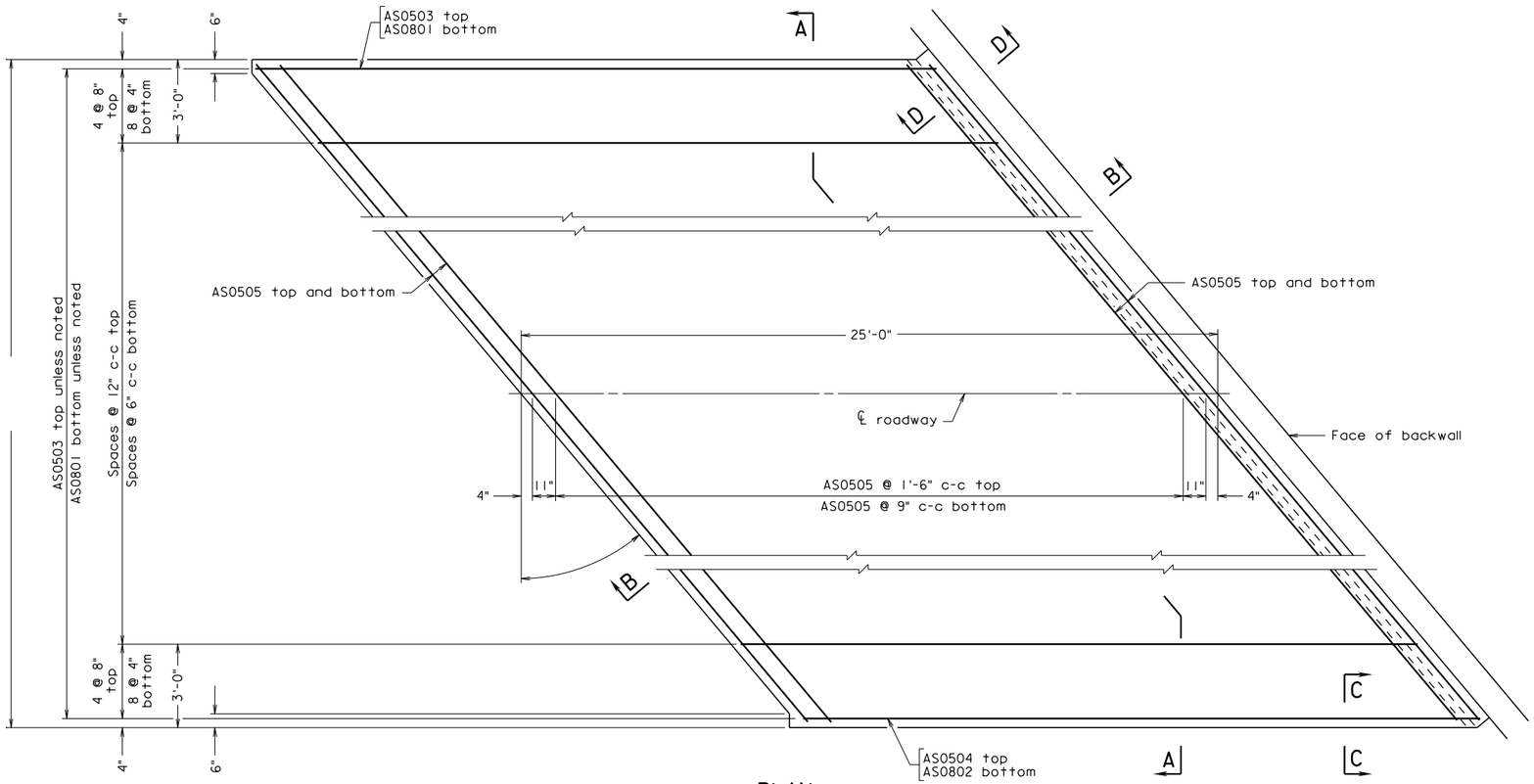

PLAN
Scale: 3/8" = 1'-0"

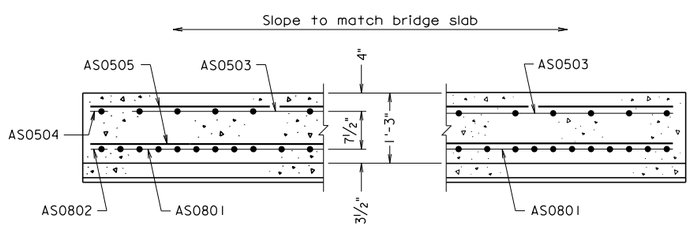

SECTION A-A
Scale: 3/4" = 1'-0"

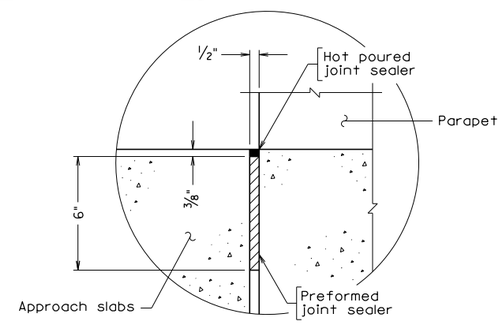

SECTION C-C
Scale: 3" = 1'-0"

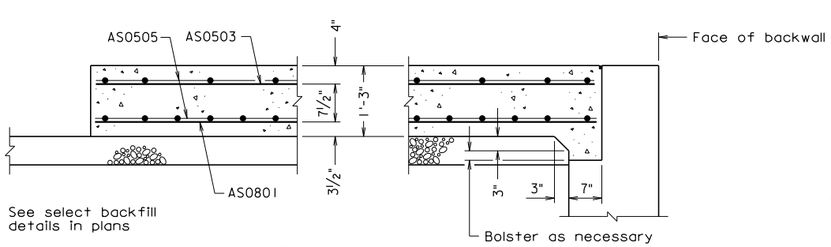

SECTION B-B
Scale: 3/4" = 1'-0"

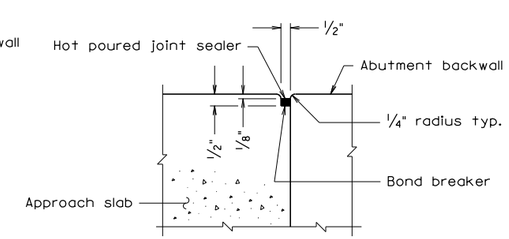

SECTION D-D
Scale: 3" = 1'-0"

Notes:

All joints that are to be sealed shall be free of cracked and spalled areas and their faces shall be free of all foreign matter, curing compound, oils, greases and dirt. All faces must be sandblasted or brushed with a mechanical rotary wire brush. Just prior to sealing, the joint shall be blown out with oil-free compressed air.

Deformed reinforcing bars shall conform to ASTM A615, Grade 60. All reinforcing bar dimensions except for bending diagram are to centers of bars.

See Road and Bridge Standards, Section 300 for dowels in joint between approach slab and concrete pavement.

Prime aggregate base material with 0.35 gal. per sq. yd. Liquid Asphalt Material Type RC-70, RC-250 or MC-250 if aggregate base is exposed for more than two weeks.

Grooving shall be in accordance with VDOT Road and Bridge Specifications, Section 404.07 (f), Class 6, Bridge Deck Finish. Payment for grooving is included in bridge deck grooving quantities.

REINFORCING STEEL SCHEDULE

Mark	No.	Size	Pin ø	Length	Location
AS0801	·	#8	—	24'-5"	Bottom longitudinal
AS0802	·	#8	—	24'-2"	Bottom longitudinal
AS0503	·	#5	—	24'-5"	Top longitudinal
AS0504	·	#5	—	24'-2"	Top longitudinal
AS0505	·	#5	—	·	Top and bottom transverse
·	·	·	·	·	·
·	·	·	·	·	·
·	·	·	·	·	·

ESTIMATED QUANTITIES

	Concrete Class A4 Bridge Approach Slab ⊗ CY	Reinforcing Steel Bridge Approach Slab ⊗ LB
Abutment A	·	·
Abutment B	·	·
Totals	·	·

⊗ Denotes items to be paid for on basis of plan quantities in accordance with current Road and Bridge Specifications.

bas14l.dgn

05-03-2013

BAS-14L

Sealed and Signed by:
Julius F.J. Volgyi Jr.
Lic. No. 010487
On the date of
May 3, 2013

A copy of the original sealed and signed standard drawing is on file in the Central Office.

VDOT S&B DIVISION
RICHMOND, VA
STRUCTURAL ENGINEER

No.	Description	Date

Revisions

COMMONWEALTH OF VIRGINIA
DEPARTMENT OF TRANSPORTATION

STRUCTURE AND BRIDGE DIVISION

APPROACH SLABS

Designed: S&B DIV
Drawn: S&B DIV
Checked: S&B DIV

Date

Plan No. BAS-14L

Sheet No.

Scale as noted

© 2013, Commonwealth of Virginia

APPROACH SLAB

SKEW OVER 35° to 45°, SKEW LEFT;
APPROACH ROADWAY CONCRETE

NOTES TO DESIGNER:

Standard to be used when approach roadway is concrete (not asphalt concrete).

Standard is for: Skew over 35° to 45°, skew left

ADD THE FOLLOWING NOTES, DIMENSIONS, DETAILS, ETC. TO STANDARD:

PLAN:

Enter skew angle, width dimension and number of spaces for AS bars (top and bottom). Check details of corner(s) where approach slab rests on back of abutment backwall. Modify details as needed when using elephant ear wing walls.

REINFORCING STEEL SCHEDULE:

Enter number of bars and length of AS0505 bar.

ESTIMATED QUANTITIES:

Enter concrete and reinforcing steel quantities for Abutments A and B as well as Totals.

STATE	FEDERAL AID ROUTE	FEDERAL AID PROJECT	STATE ROUTE	STATE PROJECT	SHEET NO.
VA.	—				

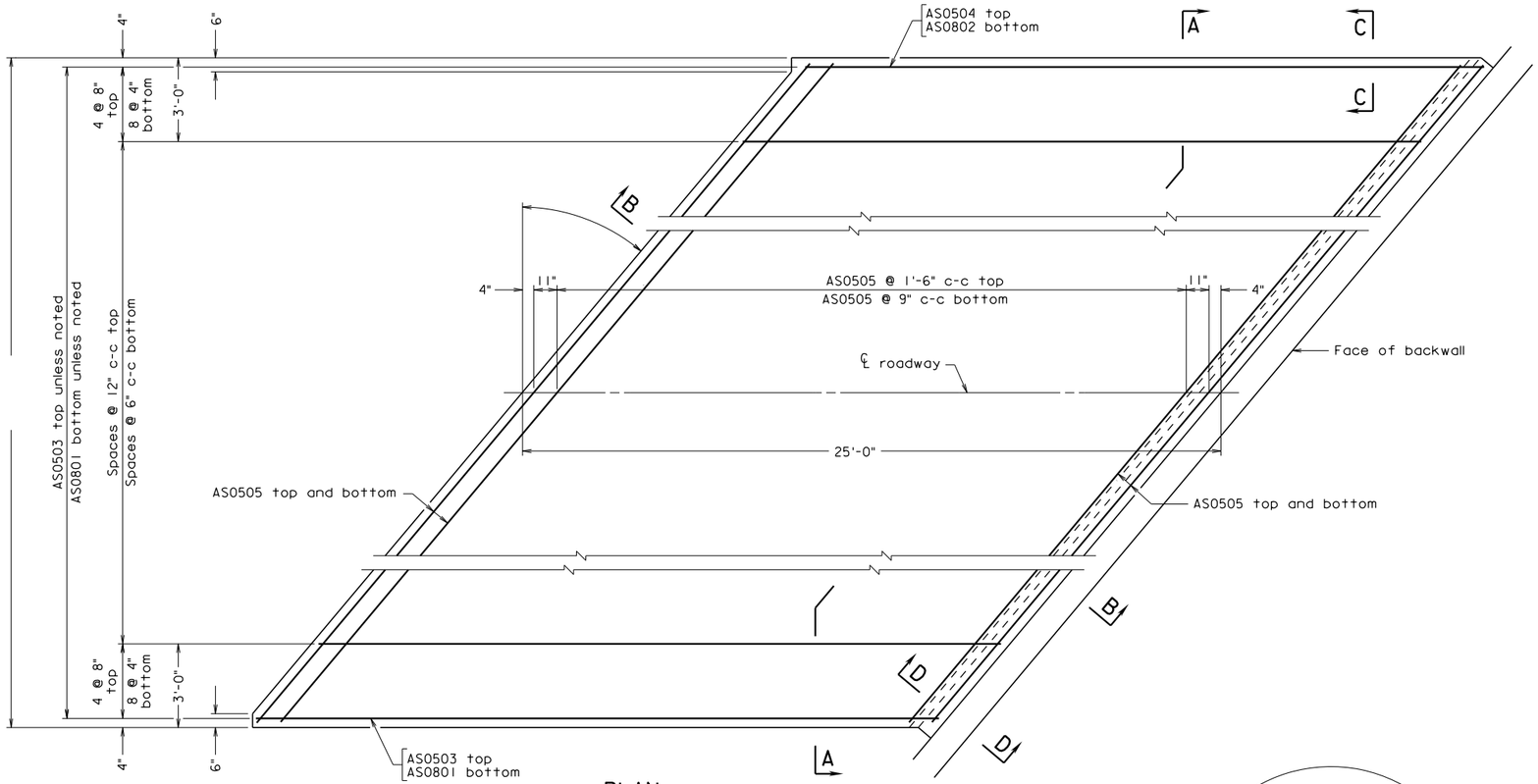

PLAN
Scale: 3/8" = 1'-0"

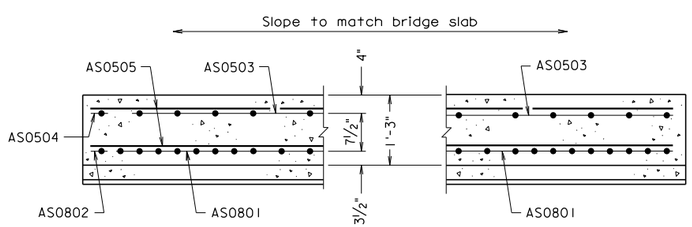

SECTION A-A
Scale: 3/4" = 1'-0"

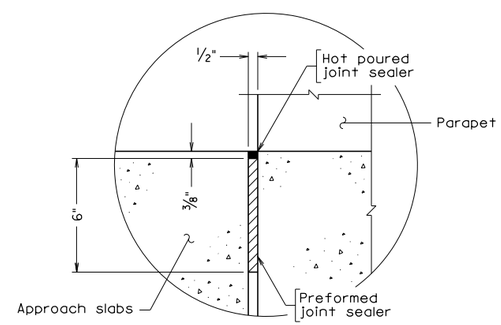

SECTION C-C
Scale: 3" = 1'-0"

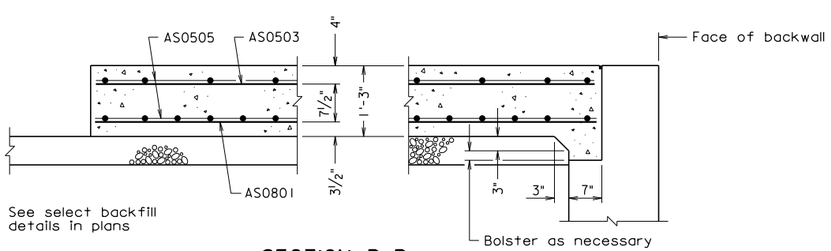

SECTION B-B
Scale: 3/4" = 1'-0"

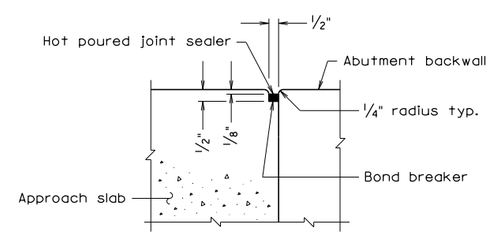

SECTION D-D
Scale: 3" = 1'-0"

Notes:

All joints that are to be sealed shall be free of cracked and spalled areas and their faces shall be free of all foreign matter, curing compound, oils, greases and dirt. All faces must be sandblasted or brushed with a mechanical rotary wire brush. Just prior to sealing, the joint shall be blown out with oil-free compressed air.

Deformed reinforcing bars shall conform to ASTM A615, Grade 60. All reinforcing bar dimensions except for bending diagram are to centers of bars.

See Road and Bridge Standards, Section 300 for dowels in joint between approach slab and concrete pavement.

Prime aggregate base material with 0.35 gal. per sq. yd. Liquid Asphalt Material Type RC-70, RC-250 or MC-250 if aggregate base is exposed for more than two weeks.

Grooving shall be in accordance with VDOT Road and Bridge Specifications, Section 404.07 (f), Class 6, Bridge Deck Finish. Payment for grooving is included in bridge deck grooving quantities.

REINFORCING STEEL SCHEDULE

Mark	No.	Size	Pin ø	Length	Location
AS0801	·	#8	—	24'-5"	Bottom longitudinal
AS0802	·	#8	—	24'-2"	Bottom longitudinal
AS0503	·	#5	—	24'-5"	Top longitudinal
AS0504	·	#5	—	24'-2"	Top longitudinal
AS0505	·	#5	—	·	Top and bottom transverse
·	·	·	·	·	·
·	·	·	·	·	·
·	·	·	·	·	·

ESTIMATED QUANTITIES

	Concrete Class A4 Bridge Approach Slab ⊗ CY	Reinforcing Steel Bridge Approach Slab ⊗ LB
Abutment A	·	·
Abutment B	·	·
Totals	·	·

⊗ Denotes items to be paid for on basis of plan quantities in accordance with current Road and Bridge Specifications.

bas14r.dgn

BAS-14R 05-03-2013

Sealed and Signed by:
Julius F.J. Volgyi Jr.
Lic. No. 010487
On the date of
May 3, 2013

A copy of the original sealed and signed standard drawing is on file in the Central Office.

VDOT S&B DIVISION
RICHMOND, VA
STRUCTURAL ENGINEER

No.	Description	Date

Revisions

Scale as noted

© 2013, Commonwealth of Virginia

COMMONWEALTH OF VIRGINIA
DEPARTMENT OF TRANSPORTATION

STRUCTURE AND BRIDGE DIVISION

APPROACH SLABS

Designed: S&B DIV
Drawn: S&B DIV
Checked: S&B DIV

Date

Plan No. BAS-14R

Sheet No.

APPROACH SLAB

SKEW OVER 35° to 45°, SKEW RIGHT;
APPROACH ROADWAY CONCRETE

NOTES TO DESIGNER:

Standard to be used when approach roadway is concrete (not asphalt concrete).

Standard is for: Skew over 35° to 45°, skew right

ADD THE FOLLOWING NOTES, DIMENSIONS, DETAILS, ETC. TO STANDARD:

PLAN:

Enter skew angle, width dimension and number of spaces for AS bars (top and bottom). Check details of corner(s) where approach slab rests on back of abutment backwall. Modify details as needed when using elephant ear wing walls.

REINFORCING STEEL SCHEDULE:

Enter number of bars and length of AS0505 bar.

ESTIMATED QUANTITIES:

Enter concrete and reinforcing steel quantities for Abutments A and B as well as Totals.

STATE	FEDERAL AID ROUTE	FEDERAL AID PROJECT	STATE ROUTE	STATE PROJECT	SHEET NO.
VA.	—				

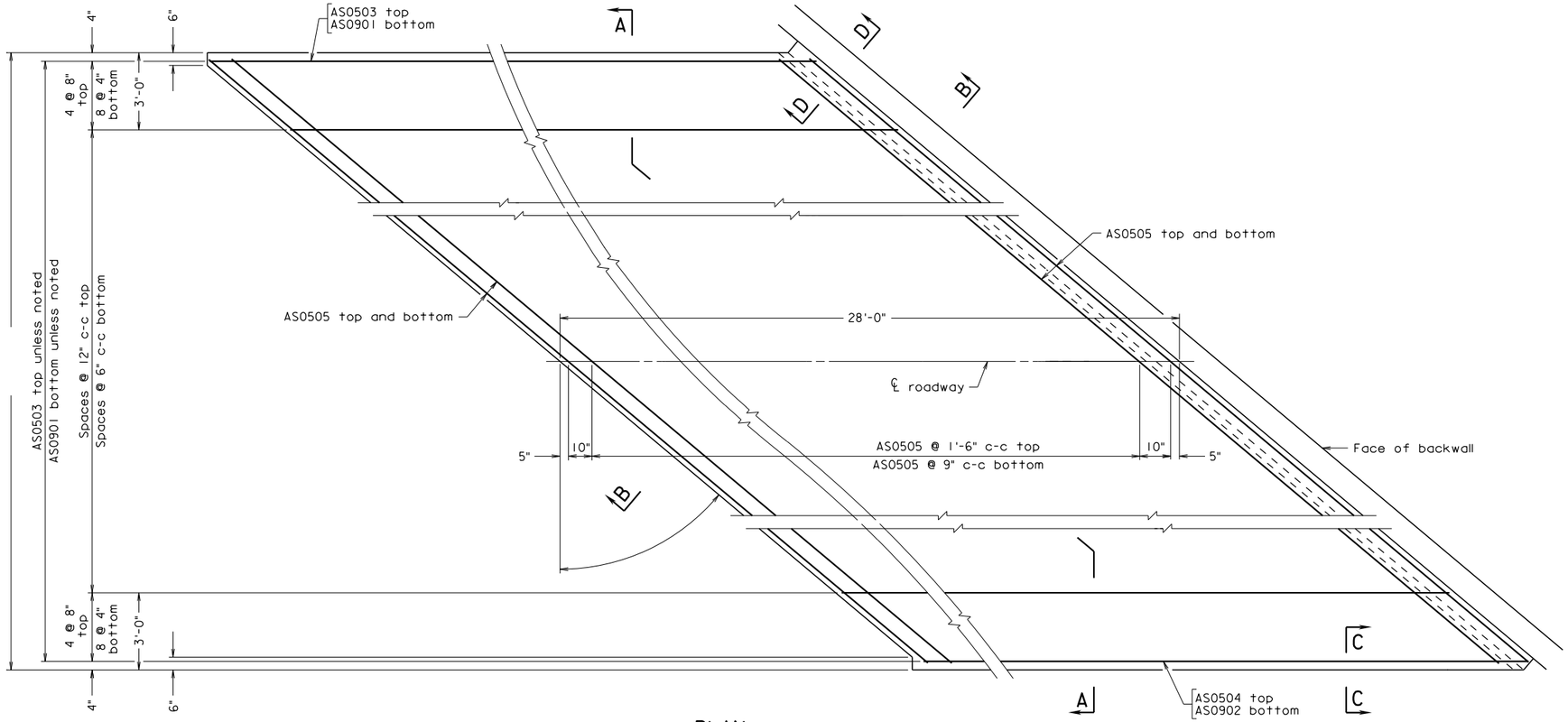

PLAN
Scale: 3/8" = 1'-0"

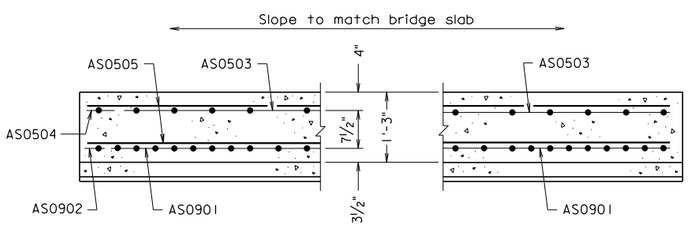

SECTION A-A
Scale: 3/4" = 1'-0"

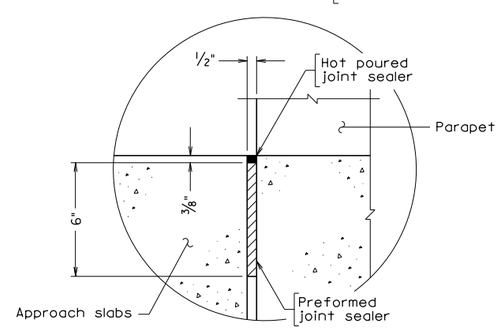

SECTION C-C
Scale: 3" = 1'-0"

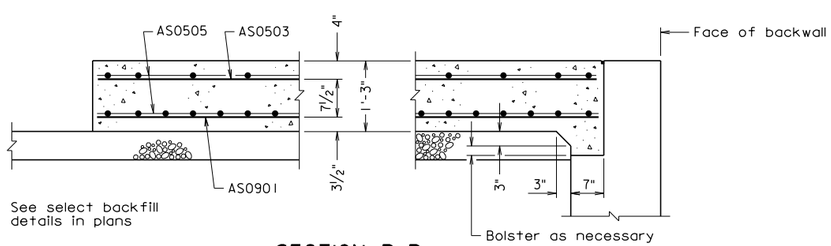

SECTION B-B
Scale: 3/4" = 1'-0"

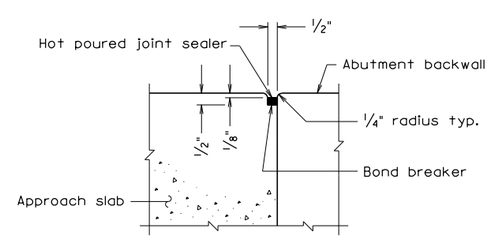

SECTION D-D
Scale: 3" = 1'-0"

Notes:

All joints that are to be sealed shall be free of cracked and spalled areas and their faces shall be free of all foreign matter, curing compound, oils, greases and dirt. All faces must be sandblasted or brushed with a mechanical rotary wire brush. Just prior to sealing, the joint shall be blown out with oil-free compressed air.

Deformed reinforcing bars shall conform to ASTM A615, Grade 60. All reinforcing bar dimensions except for bending diagram are to centers of bars.

See Road and Bridge Standards, Section 300 for dowels in joint between approach slab and concrete pavement.

Prime aggregate base material with 0.35 gal. per sq. yd. Liquid Asphalt Material Type RC-70, RC-250 or MC-250 if aggregate base is exposed for more than two weeks.

Grooving shall be in accordance with VDOT Road and Bridge Specifications, Section 404.07 (f), Class 6, Bridge Deck Finish. Payment for grooving is included in bridge deck grooving quantities.

REINFORCING STEEL SCHEDULE

Mark	No.	Size	Pin ø	Length	Location
AS0901	·	#9	—	27'-5"	Bottom longitudinal
AS0902	·	#9	—	27'-2"	Bottom longitudinal
AS0503	·	#5	—	27'-5"	Top longitudinal
AS0504	·	#5	—	27'-2"	Top longitudinal
AS0505	·	#5	—	·	Top and bottom transverse
·	·	·	·	·	·
·	·	·	·	·	·
·	·	·	·	·	·

ESTIMATED QUANTITIES

	Concrete Class A4 Bridge Approach Slab ⊗ CY	Reinforcing Steel Bridge Approach Slab ⊗ LB
Abutment A	·	·
Abutment B	·	·
Totals	·	·

⊗ Denotes items to be paid for on basis of plan quantities in accordance with current Road and Bridge Specifications.

bas15l.dgn

05-03-2013

BAS-15L

Sealed and Signed by:
Julius F.J. Volgyi Jr.
Lic. No. 010487
On the date of
May 3, 2013

A copy of the original sealed and signed standard drawing is on file in the Central Office.

VDOT S&B DIVISION
RICHMOND, VA
STRUCTURAL ENGINEER

No.	Description	Date
	Revisions	

COMMONWEALTH OF VIRGINIA
DEPARTMENT OF TRANSPORTATION

STRUCTURE AND BRIDGE DIVISION

APPROACH SLABS

Designed: S&B DIV
Drawn: S&B DIV
Checked: S&B DIV

Date

Plan No. BAS-15L

Sheet No.

Scale as noted

© 2013, Commonwealth of Virginia

APPROACH SLAB

SKEW OVER 45° to 50°, SKEW LEFT;
APPROACH ROADWAY CONCRETE

NOTES TO DESIGNER:

Standard to be used when approach roadway is concrete (not asphalt concrete).

Standard is for: Skew over 45° to 50°, skew left

ADD THE FOLLOWING NOTES, DIMENSIONS, DETAILS, ETC. TO STANDARD:

PLAN:

Enter skew angle, width dimension and number of spaces for AS bars (top and bottom). Check details of corner(s) where approach slab rests on back of abutment backwall. Modify details as needed when using elephant ear wing walls.

REINFORCING STEEL SCHEDULE:

Enter number of bars and length of AS0505 bar.

ESTIMATED QUANTITIES:

Enter concrete and reinforcing steel quantities for Abutments A and B as well as Totals.

STATE	FEDERAL AID ROUTE	FEDERAL AID PROJECT	STATE ROUTE	STATE PROJECT	SHEET NO.
VA.	—				

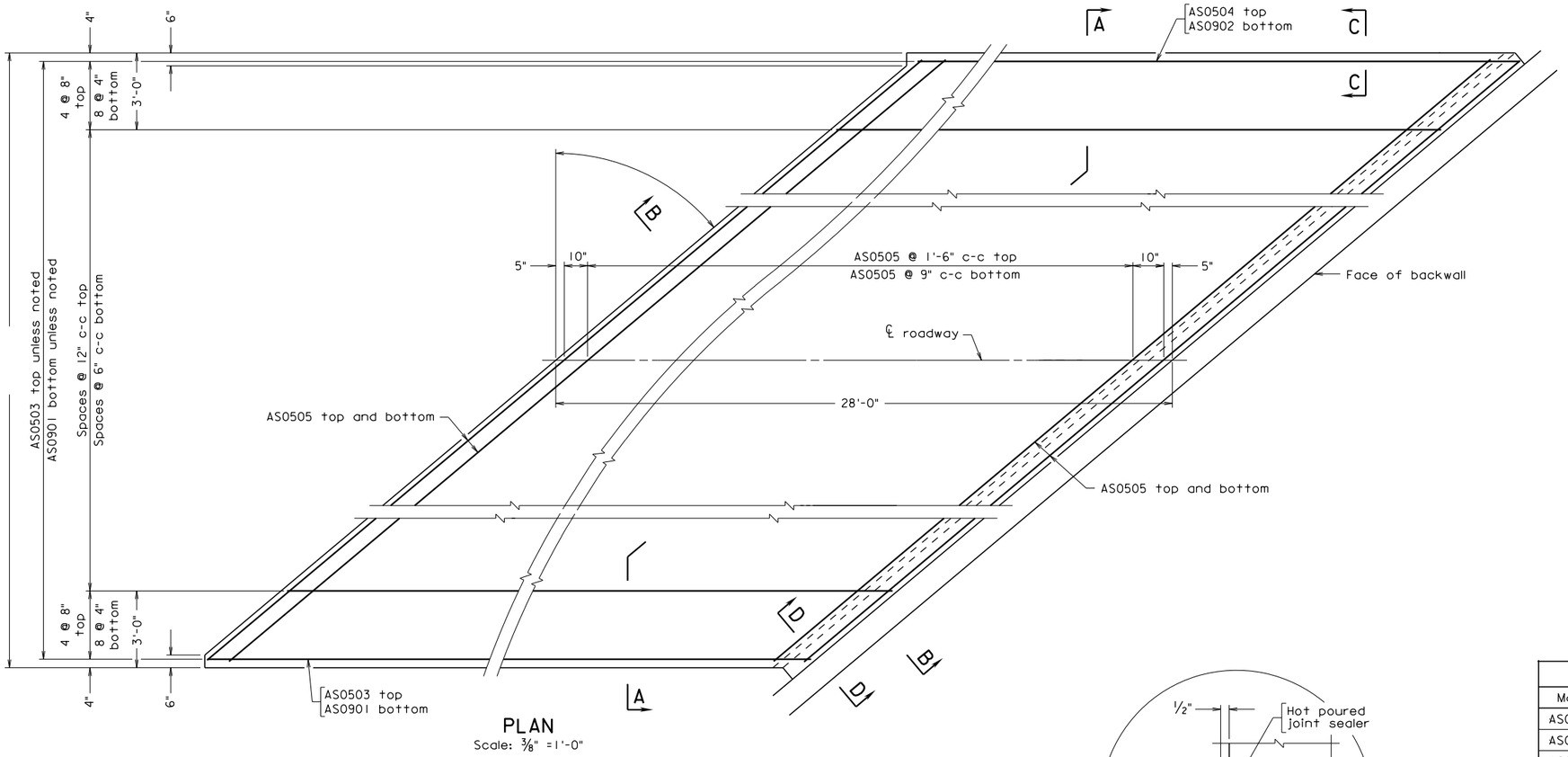

PLAN
Scale: 3/8" =1'-0"

Notes:

All joints that are to be sealed shall be free of cracked and spalled areas and their faces shall be free of all foreign matter, curing compound, oils, greases and dirt. All faces must be sandblasted or brushed with a mechanical rotary wire brush. Just prior to sealing, the joint shall be blown out with oil-free compressed air.

Deformed reinforcing bars shall conform to ASTM A615, Grade 60. All reinforcing bar dimensions except for bending diagram are to centers of bars.

See Road and Bridge Standards, Section 300 for dowels in joint between approach slab and concrete pavement.

Prime aggregate base material with 0.35 gal. per sq. yd. Liquid Asphalt Material Type RC-70, RC-250 or MC-250 if aggregate base is exposed for more than two weeks.

Grooving shall be in accordance with VDOT Road and Bridge Specifications, Section 404.07 (f), Class 6, Bridge Deck Finish. Payment for grooving is included in bridge deck grooving quantities.

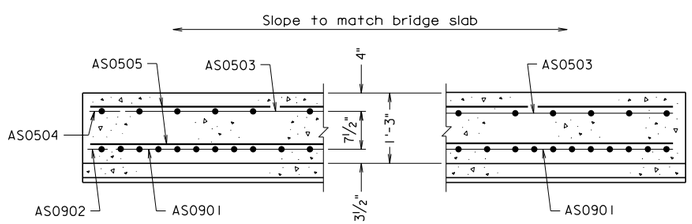

SECTION A-A
Scale: 3/4" = 1'-0"

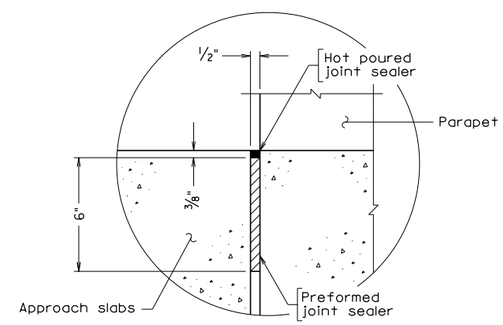

SECTION C-C
Scale: 3" = 1'-0"

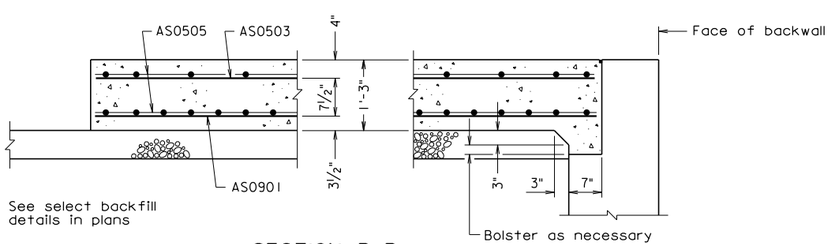

SECTION B-B
Scale: 3/4" = 1'-0"

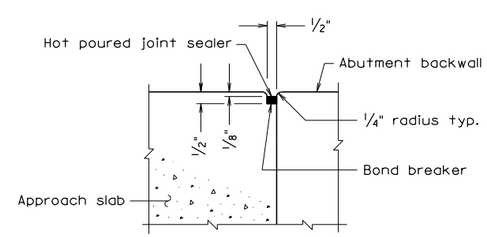

SECTION D-D
Scale: 3" = 1'-0"

REINFORCING STEEL SCHEDULE

Mark	No.	Size	Pin ø	Length	Location
AS0901	·	#9	—	27'-5"	Bottom longitudinal
AS0902	·	#9	—	27'-2"	Bottom longitudinal
AS0503	·	#5	—	27'-5"	Top longitudinal
AS0504	·	#5	—	27'-2"	Top longitudinal
AS0505	·	#5	—	·	Top and bottom transverse
·	·	·	·	·	·
·	·	·	·	·	·
·	·	·	·	·	·

ESTIMATED QUANTITIES

	Concrete Class A4 Bridge Approach Slab ⊗ CY	Reinforcing Steel Bridge Approach Slab ⊗ LB
Abutment A	·	·
Abutment B	·	·
Totals	·	·

⊗ Denotes items to be paid for on basis of plan quantities in accordance with current Road and Bridge Specifications.

bas15r.dgn

BAS-15R 05-03-2013

Sealed and Signed by:
Julius F.J. Volgyi Jr.
Lic. No. 010487
On the date of
May 3, 2013

A copy of the original sealed and signed standard drawing is on file in the Central Office.

VDOT S&B DIVISION
RICHMOND, VA
STRUCTURAL ENGINEER

No.	Description	Date

Revisions

Scale as noted

© 2013, Commonwealth of Virginia

COMMONWEALTH OF VIRGINIA
DEPARTMENT OF TRANSPORTATION

STRUCTURE AND BRIDGE DIVISION

APPROACH SLABS

Designed: S&B DIV
Drawn: S&B DIV
Checked: S&B DIV

Date

Plan No. BAS-15R

Sheet No.

APPROACH SLAB

SKEW OVER 45° to 50°, SKEW RIGHT;
APPROACH ROADWAY CONCRETE

NOTES TO DESIGNER:

Standard to be used when approach roadway is concrete (not asphalt concrete).

Standard is for: Skew over 45° to 50°, skew right

ADD THE FOLLOWING NOTES, DIMENSIONS, DETAILS, ETC. TO STANDARD:

PLAN:

Enter skew angle, width dimension and number of spaces for AS bars (top and bottom). Check details of corner(s) where approach slab rests on back of abutment backwall. Modify details as needed when using elephant ear wing walls.

REINFORCING STEEL SCHEDULE:

Enter number of bars and length of AS0505 bar.

ESTIMATED QUANTITIES:

Enter concrete and reinforcing steel quantities for Abutments A and B as well as Totals.

STATE	FEDERAL AID ROUTE	FEDERAL AID PROJECT	STATE ROUTE	STATE PROJECT	SHEET NO.
VA.	—				

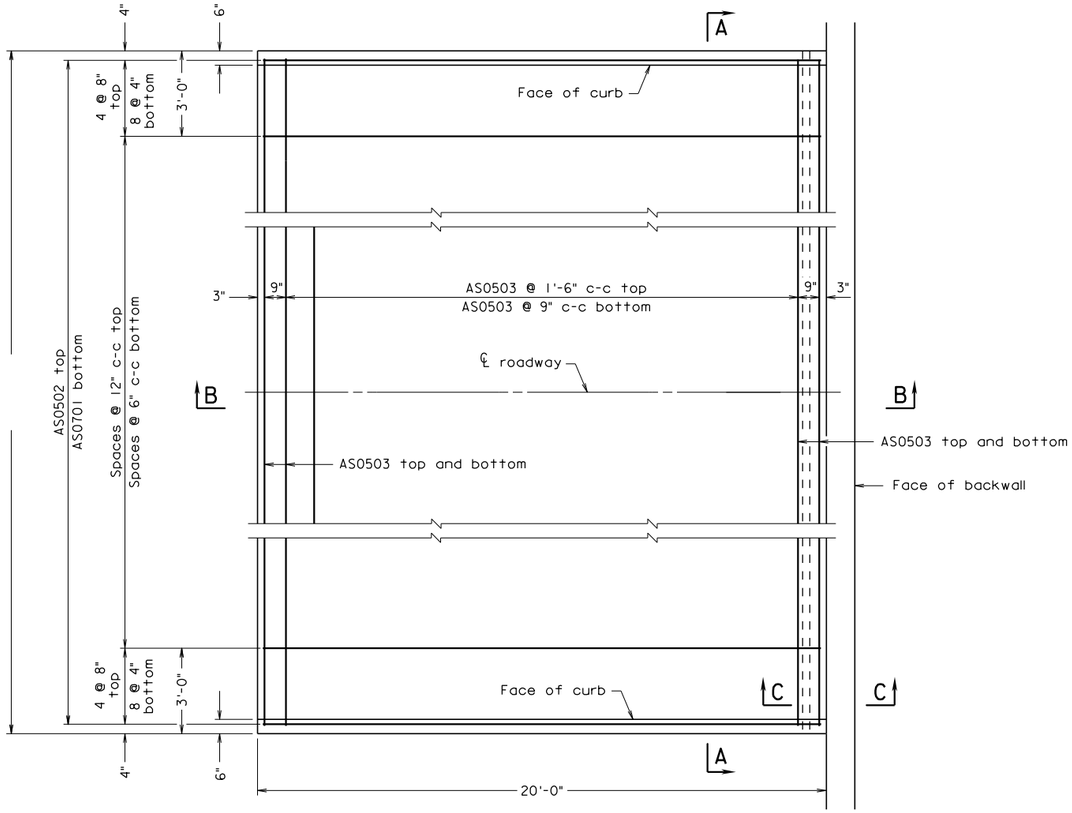

PLAN
Scale: 3/8" = 1'-0"

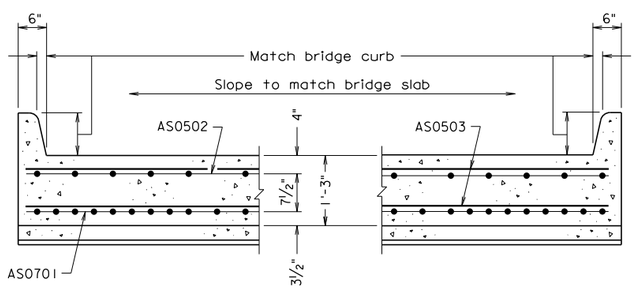

SECTION A-A
Scale: 3/4" = 1'-0"

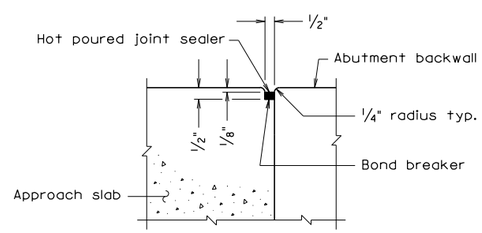

SECTION C-C
Scale: 3" = 1'-0"

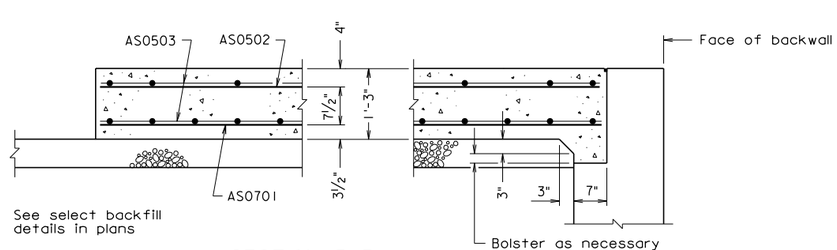

SECTION B-B
Scale: 3/4" = 1'-0"

Notes:

All joints that are to be sealed shall be free of cracked and spalled areas and their faces shall be free of all foreign matter, curing compound, oils, greases and dirt. All faces must be sandblasted or brushed with a mechanical rotary wire brush. Just prior to sealing, the joint shall be blown out with oil-free compressed air.

Deformed reinforcing bars shall conform to ASTM A615, Grade 60. All reinforcing bar dimensions except for bending diagram are to centers of bars.

See Road and Bridge Standards, Section 300 for dowels in joint between approach slab and concrete pavement.

Prime aggregate base material with 0.35 gal. per sq. yd. Liquid Asphalt Material Type RC-70, RC-250 or MC-250 if aggregate base is exposed for more than two weeks.

Grooving shall be in accordance with VDOT Road and Bridge Specifications, Section 404.07 (f), Class 6, Bridge Deck Finish. Payment for grooving is included in bridge deck grooving quantities.

REINFORCING STEEL SCHEDULE

Mark	No.	Size	Pin ø	Length	Location
AS0701	·	#7	—	19'-8"	Bottom longitudinal
AS0502	·	#5	—	19'-8"	Top longitudinal
AS0503	·	#5	—	·	Top and bottom transverse
·	·	·	·	·	·
·	·	·	·	·	·
·	·	·	·	·	·
·	·	·	·	·	·
·	·	·	·	·	·

ESTIMATED QUANTITIES

	Concrete Class A4 Bridge Approach Slab ⊗ CY	Reinforcing Steel Bridge Approach Slab ⊗ LB
Abutment A	·	·
Abutment B	·	·
Totals	·	·

⊗ Denotes items to be paid for on basis of plan quantities in accordance with current Road and Bridge Specifications.

bas16.dgn

05-03-2013

Sealed and Signed by: Julius F.J. Volgyi Jr. Lic. No. 010487 On the date of May 3, 2013

A copy of the original sealed and signed standard drawing is on file in the Central Office.

VDOT S&B DIVISION RICHMOND, VA STRUCTURAL ENGINEER

BAS-16

Scale as noted

© 2013, Commonwealth of Virginia

No.	Description	Date

Revisions

COMMONWEALTH OF VIRGINIA
DEPARTMENT OF TRANSPORTATION

STRUCTURE AND BRIDGE DIVISION

APPROACH SLABS

Designed: S&B DIV
Drawn: S&B DIV
Checked: S&B DIV

Date

Plan No. BAS-16

Sheet No.

APPROACH SLAB

STRAIGHT CROSSING
STRUCTURE WITH SIDEWALKS;
APPROACH ROADWAY CONCRETE

NOTES TO DESIGNER:

Standard to be used when approach roadway is concrete (not asphalt concrete).

Standard is for: 0° Skew
Structure with sidewalks

ADD THE FOLLOWING NOTES, DIMENSIONS, DETAILS, ETC. TO STANDARD:

PLAN:

Enter skew angle, width dimension and number of spaces for AS bars (top and bottom). Modify details as needed when using integral abutments, elephant ears, etc. Modify when sidewalk is only on one side.

REINFORCING STEEL SCHEDULE:

Enter number of bars and length of AS0503 bar.

ESTIMATED QUANTITIES:

Enter concrete and reinforcing steel quantities for Abutments A and B as well as Totals.

STATE	FEDERAL AID ROUTE	FEDERAL AID PROJECT	STATE ROUTE	STATE PROJECT	SHEET NO.
VA.	—				

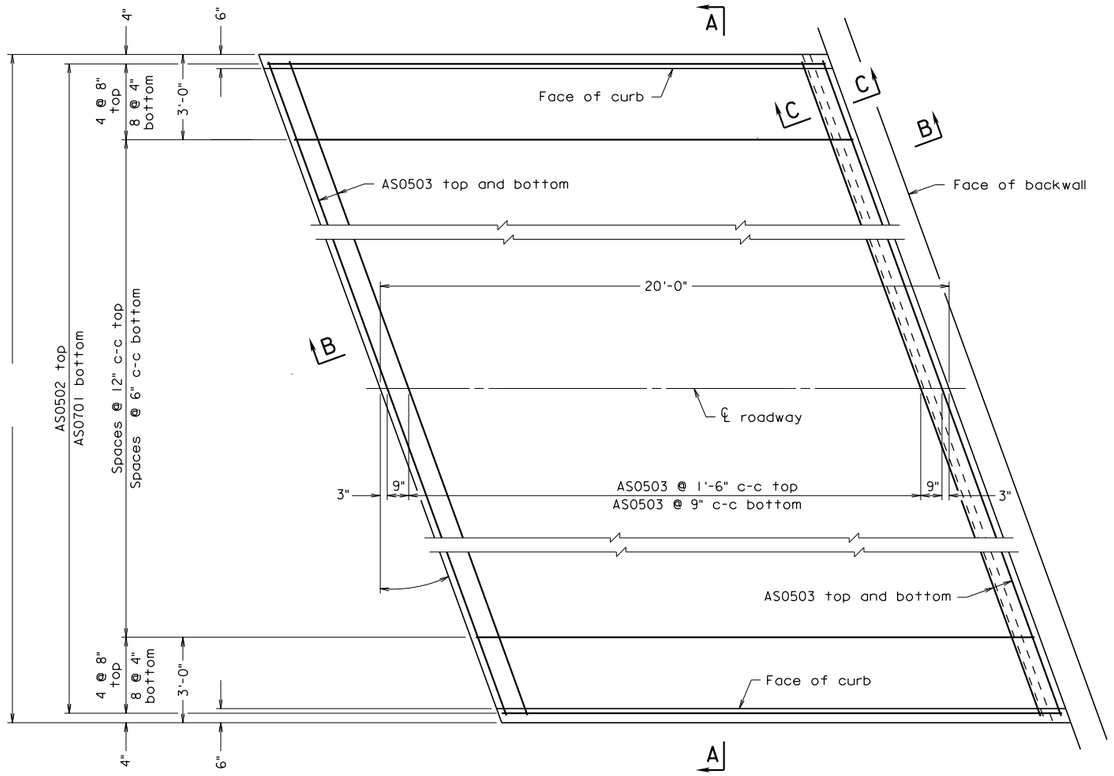

PLAN
Scale: 3/8" = 1'-0"

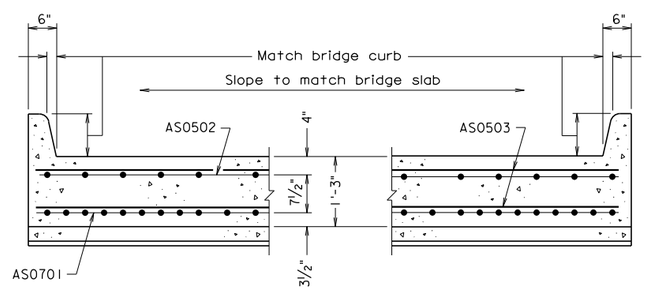

SECTION A-A
Scale: 3/4" = 1'-0"

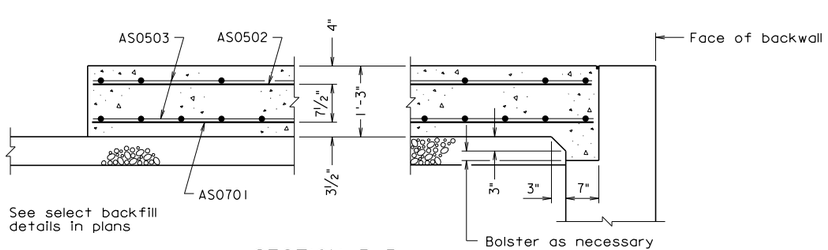

SECTION B-B
Scale: 3/4" = 1'-0"

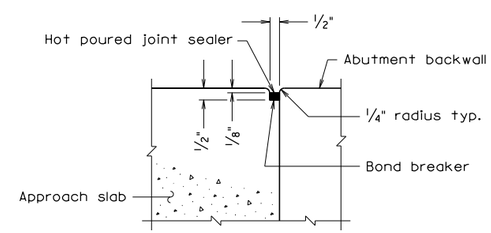

SECTION C-C
Scale: 3" = 1'-0"

Notes:

All joints that are to be sealed shall be free of cracked and spalled areas and their faces shall be free of all foreign matter, curing compound, oils, greases and dirt. All faces must be sandblasted or brushed with a mechanical rotary wire brush. Just prior to sealing, the joint shall be blown out with oil-free compressed air.

Deformed reinforcing bars shall conform to ASTM A615, Grade 60. All reinforcing bar dimensions except for bending diagram are to centers of bars.

See Road and Bridge Standards, Section 300 for dowels in joint between approach slab and concrete pavement.

Prime aggregate base material with 0.35 gal. per sq. yd. Liquid Asphalt Material Type RC-70, RC-250 or MC-250 if aggregate base is exposed for more than two weeks.

Grooving shall be in accordance with VDOT Road and Bridge Specifications, Section 404.07 (f), Class 6, Bridge Deck Finish. Payment for grooving is included in bridge deck grooving quantities.

REINFORCING STEEL SCHEDULE

Mark	No.	Size	Pin ø	Length	Location
AS0701	·	#7	—	19'-8"	Bottom longitudinal
AS0502	·	#5	—	19'-8"	Top longitudinal
AS0503	·	#5	—	·	Top and bottom transverse
·	·	·	·	·	·
·	·	·	·	·	·
·	·	·	·	·	·
·	·	·	·	·	·
·	·	·	·	·	·

ESTIMATED QUANTITIES

	Concrete Class A4 Bridge Approach Slab ⊗ CY	Reinforcing Steel Bridge Approach Slab ⊗ LB
Abutment A	·	·
Abutment B	·	·
Totals	·	·

⊗ Denotes items to be paid for on basis of plan quantities in accordance with current Road and Bridge Specifications.

bas17l.dgn

BAS-17L 05-03-2013

Sealed and Signed by:
Julius F.J. Volgyi Jr.
Lic. No. 010487
On the date of
May 3, 2013

A copy of the original sealed and signed standard drawing is on file in the Central Office.

VDOT S&B DIVISION
RICHMOND, VA
STRUCTURAL ENGINEER

No.	Description	Date
	Revisions	

Scale as noted

© 2013, Commonwealth of Virginia

COMMONWEALTH OF VIRGINIA
DEPARTMENT OF TRANSPORTATION

STRUCTURE AND BRIDGE DIVISION

APPROACH SLABS

Designed: S&B DIV
Drawn: S&B DIV
Checked: S&B DIV

Date

Plan No. BAS-17L

Sheet No.

APPROACH SLAB

SKEW 20° OR LESS, SKEW LEFT
STRUCTURE WITH SIDEWALKS;
APPROACH ROADWAY CONCRETE

NOTES TO DESIGNER:

Standard to be used when approach roadway is concrete (not asphalt concrete).

Standard is for: Skew 20° or less, skew left
Structure with sidewalks

ADD THE FOLLOWING NOTES, DIMENSIONS, DETAILS, ETC. TO STANDARD:

PLAN:

Enter skew angle, width dimension and number of spaces for AS bars (top and bottom). Check details of corner(s) where approach slab rests on back of abutment backwall. Modify details as needed when using integral abutments, elephant ears, etc. Modify when sidewalk is only on one side.

REINFORCING STEEL SCHEDULE:

Enter number of bars and length of AS0503 bar.

ESTIMATED QUANTITIES:

Enter concrete and reinforcing steel quantities for Abutments A and B as well as Totals.

STATE	FEDERAL AID ROUTE	FEDERAL AID PROJECT	STATE ROUTE	STATE PROJECT	SHEET NO.
VA.	—				

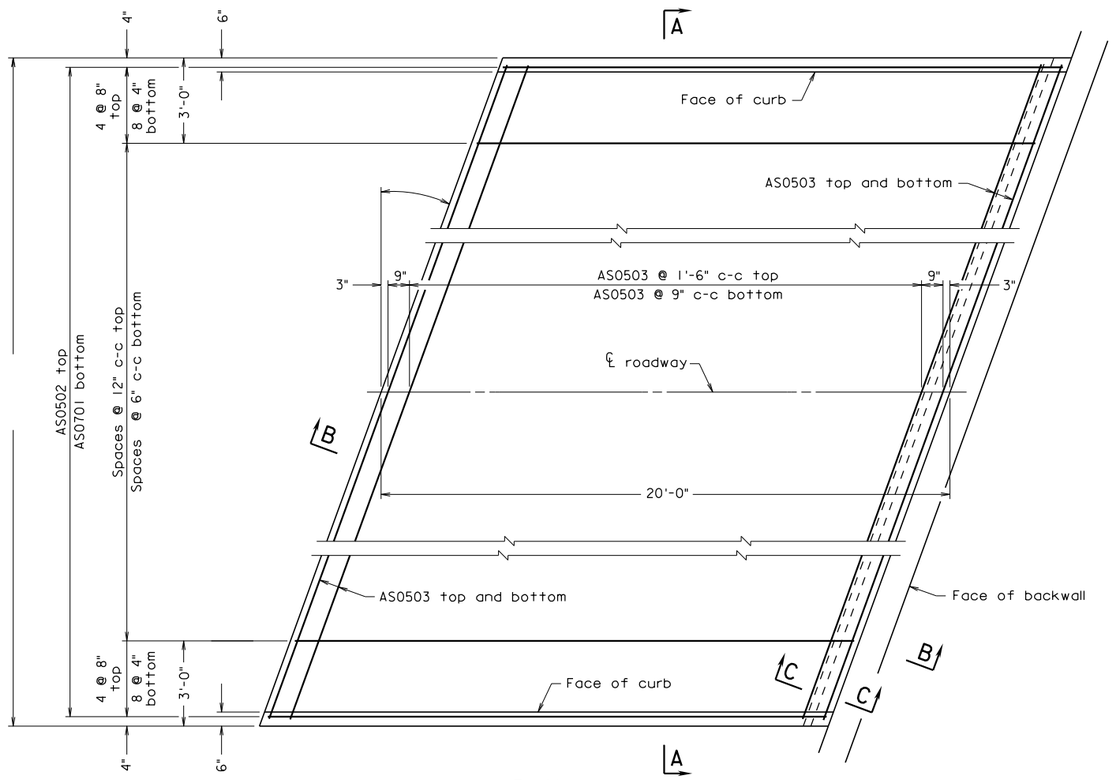

PLAN
Scale: 3/8" = 1'-0"

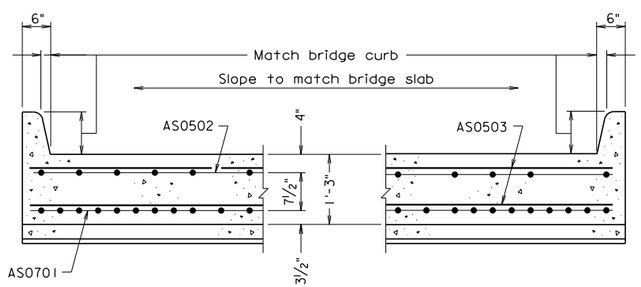

SECTION A-A
Scale: 3/4" = 1'-0"

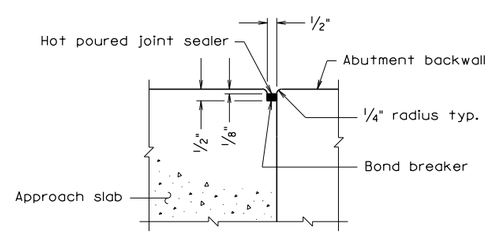

SECTION C-C
Scale: 3" = 1'-0"

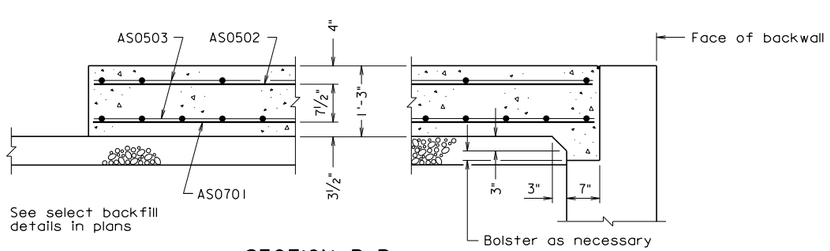

SECTION B-B
Scale: 3/4" = 1'-0"

Notes:

All joints that are to be sealed shall be free of cracked and spalled areas and their faces shall be free of all foreign matter, curing compound, oils, greases and dirt. All faces must be sandblasted or brushed with a mechanical rotary wire brush. Just prior to sealing, the joint shall be blown out with oil-free compressed air.

Deformed reinforcing bars shall conform to ASTM A615, Grade 60. All reinforcing bar dimensions except for bending diagram are to centers of bars.

See Road and Bridge Standards, Section 300 for dowels in joint between approach slab and concrete pavement.

Prime aggregate base material with 0.35 gal. per sq. yd. Liquid Asphalt Material Type RC-70, RC-250 or MC-250 if aggregate base is exposed for more than two weeks.

Grooving shall be in accordance with VDOT Road and Bridge Specifications, Section 404.07 (f), Class 6, Bridge Deck Finish. Payment for grooving is included in bridge deck grooving quantities.

REINFORCING STEEL SCHEDULE

Mark	No.	Size	Pin ø	Length	Location
AS0701	·	#7	—	19'-8"	Bottom longitudinal
AS0502	·	#5	—	19'-8"	Top longitudinal
AS0503	·	#5	—	·	Top and bottom transverse
·	·	·	·	·	·
·	·	·	·	·	·
·	·	·	·	·	·
·	·	·	·	·	·
·	·	·	·	·	·

ESTIMATED QUANTITIES

	Concrete Class A4 Bridge Approach Slab ⊗ CY	Reinforcing Steel Bridge Approach Slab ⊗ LB
Abutment A	·	·
Abutment B	·	·
Totals	·	·

⊗ Denotes items to be paid for on basis of plan quantities in accordance with current Road and Bridge Specifications.

basl7r.dgn

05-03-2013

BAS-17R

Sealed and Signed by:
Julius F.J. Volgyi Jr.
Lic. No. 010487
On the date of
May 3, 2013

A copy of the original sealed and signed standard drawing is on file in the Central Office.

VDOT S&B DIVISION
RICHMOND, VA
STRUCTURAL ENGINEER

No.	Description	Date

Revisions

COMMONWEALTH OF VIRGINIA
DEPARTMENT OF TRANSPORTATION

STRUCTURE AND BRIDGE DIVISION

APPROACH SLABS

Designed: S&B DIV
Drawn: S&B DIV
Checked: S&B DIV

Date

Plan No. BAS-17R

Sheet No.

Scale as noted

©2013, Commonwealth of Virginia

APPROACH SLAB

SKEW 20° OR LESS, SKEW RIGHT
STRUCTURE WITH SIDEWALKS;
APPROACH ROADWAY CONCRETE

NOTES TO DESIGNER:

Standard to be used when approach roadway is concrete (not asphalt concrete).

Standard is for: Skew 20° or less, skew right
Structure with sidewalks

ADD THE FOLLOWING NOTES, DIMENSIONS, DETAILS, ETC. TO STANDARD:

PLAN:

Enter skew angle, width dimension and number of spaces for AS bars (top and bottom). Check details of corner(s) where approach slab rests on back of abutment backwall. Modify details as needed when using integral abutments, elephant ears, etc. Modify when sidewalk is only on one side.

REINFORCING STEEL SCHEDULE:

Enter number of bars and length of AS0503 bar.

ESTIMATED QUANTITIES:

Enter concrete and reinforcing steel quantities for Abutments A and B as well as Totals.

STATE	FEDERAL AID ROUTE	FEDERAL AID PROJECT	STATE ROUTE	STATE PROJECT	SHEET NO.
VA.	—				

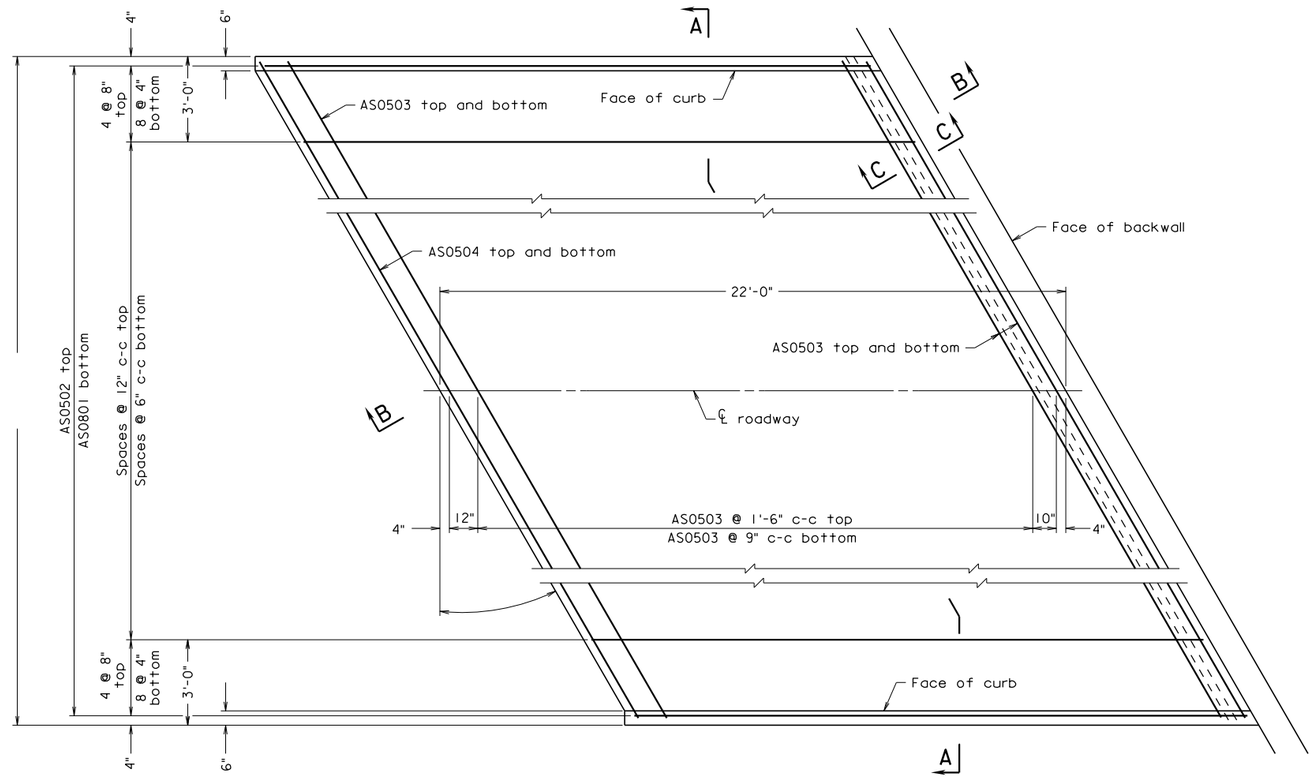

PLAN
Scale: 3/8" = 1'-0"

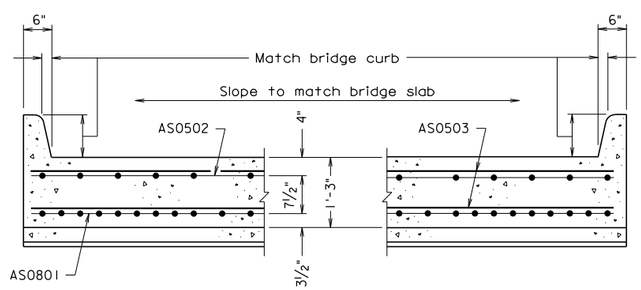

SECTION A-A
Scale: 3/4" = 1'-0"

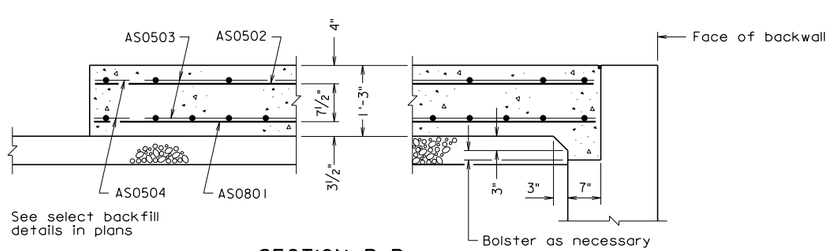

SECTION B-B
Scale: 3/4" = 1'-0"

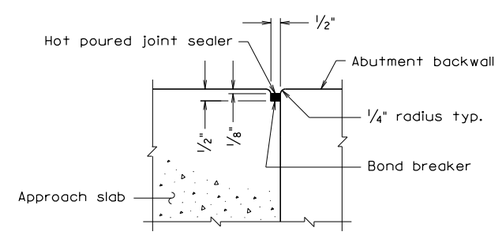

SECTION C-C
Scale: 3" = 1'-0"

Notes:

All joints that are to be sealed shall be free of cracked and spalled areas and their faces shall be free of all foreign matter, curing compound, oils, greases and dirt. All faces must be sandblasted or brushed with a mechanical rotary wire brush. Just prior to sealing, the joint shall be blown out with oil-free compressed air.

Deformed reinforcing bars shall conform to ASTM A615, Grade 60. All reinforcing bar dimensions except for bending diagram are to centers of bars.

See Road and Bridge Standards, Section 300 for dowels in joint between approach slab and concrete pavement.

Prime aggregate base material with 0.35 gal. per sq. yd. Liquid Asphalt Material Type RC-70, RC-250 or MC-250 if aggregate base is exposed for more than two weeks.

Grooving shall be in accordance with VDOT Road and Bridge Specifications, Section 404.07 (f), Class 6, Bridge Deck Finish. Payment for grooving is included in bridge deck grooving quantities.

REINFORCING STEEL SCHEDULE

Mark	No.	Size	Pin ø	Length	Location
AS0801	·	#8	—	21'-6"	Bottom longitudinal
AS0502	·	#5	—	21'-6"	Top longitudinal
AS0503	·	#5	—	·	Top and bottom transverse
AS0504	·	#5	—	·	Top and bottom transverse
·	·	·	·	·	·
·	·	·	·	·	·
·	·	·	·	·	·
·	·	·	·	·	·

ESTIMATED QUANTITIES

	Concrete Class A4 Bridge Approach Slab ⊗ CY	Reinforcing Steel Bridge Approach Slab ⊗ LB
Abutment A	·	·
Abutment B	·	·
Totals	·	·

⊗ Denotes items to be paid for on basis of plan quantities in accordance with current Road and Bridge Specifications.

bas18.dgn

05-03-2013

BAS-18L

Sealed and Signed by:
Julius F.J. Volgyi Jr.
Lic. No. 010487
On the date of
May 3, 2013

A copy of the original sealed and signed standard drawing is on file in the Central Office.

VDOT S&B DIVISION
RICHMOND, VA
STRUCTURAL ENGINEER

No.	Description	Date

Revisions

Scale as noted

©2013, Commonwealth of Virginia

COMMONWEALTH OF VIRGINIA
DEPARTMENT OF TRANSPORTATION

STRUCTURE AND BRIDGE DIVISION

APPROACH SLABS

Designed: S&B DIV
Drawn: S&B DIV
Checked: S&B DIV

Date

Plan No. BAS-18L

Sheet No.

APPROACH SLAB

SKEW OVER 20° TO 35°, SKEW LEFT
STRUCTURE WITH SIDEWALKS;
APPROACH ROADWAY CONCRETE

NOTES TO DESIGNER:

Standard to be used when approach roadway is concrete (not asphalt concrete).

Standard is for: Skew over 20° to 35°, skew left
Structure with sidewalks

ADD THE FOLLOWING NOTES, DIMENSIONS, DETAILS, ETC. TO STANDARD:

PLAN:

Enter skew angle, width dimension and number of spaces for AS bars (top and bottom). Check details of corner(s) where approach slab rests on back of abutment backwall. Modify details as needed when using integral abutments, elephant ears, etc. Modify when sidewalk is only on one side.

REINFORCING STEEL SCHEDULE:

Enter number of bars and length of AS0503 and AS0504 bars.

ESTIMATED QUANTITIES:

Enter concrete and reinforcing steel quantities for Abutments A and B as well as Totals.

STATE	FEDERAL AID ROUTE	FEDERAL AID PROJECT	STATE ROUTE	STATE PROJECT	SHEET NO.
VA.	—				

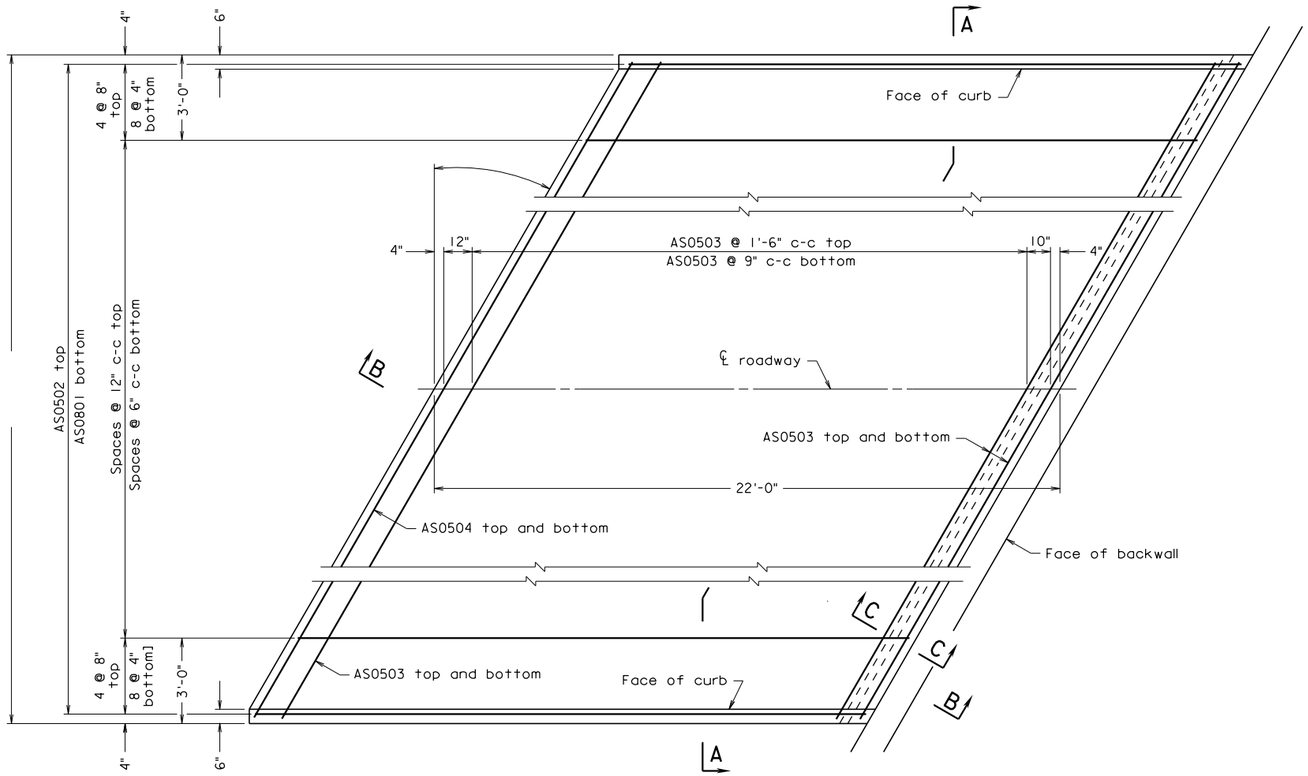

PLAN
Scale: 3/8" = 1'-0"

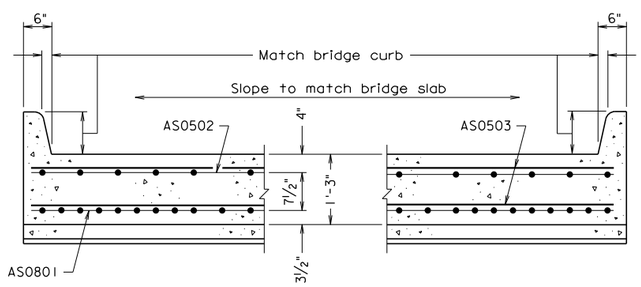

SECTION A-A
Scale: 3/4" = 1'-0"

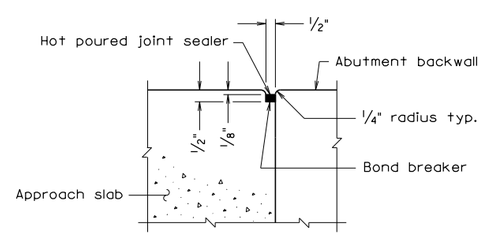

SECTION C-C
Scale: 3" = 1'-0"

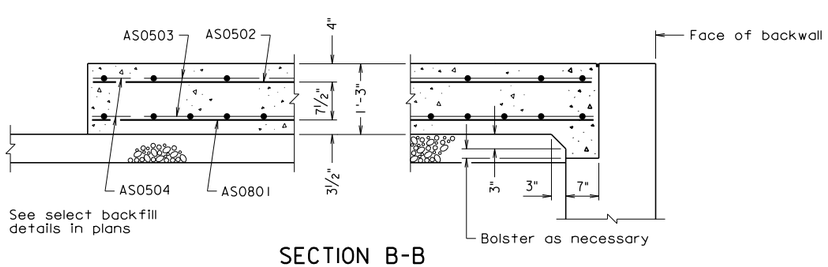

SECTION B-B
Scale: 3/4" = 1'-0"

Notes:

All joints that are to be sealed shall be free of cracked and spalled areas and their faces shall be free of all foreign matter, curing compound, oils, greases and dirt. All faces must be sandblasted or brushed with a mechanical rotary wire brush. Just prior to sealing, the joint shall be blown out with oil-free compressed air.

Deformed reinforcing bars shall conform to ASTM A615, Grade 60. All reinforcing bar dimensions except for bending diagram are to centers of bars.

See Road and Bridge Standards, Section 300 for dowels in joint between approach slab and concrete pavement.

Prime aggregate base material with 0.35 gal. per sq. yd. Liquid Asphalt Material Type RC-70, RC-250 or MC-250 if aggregate base is exposed for more than two weeks.

Grooving shall be in accordance with VDOT Road and Bridge Specifications, Section 404.07 (f), Class 6, Bridge Deck Finish. Payment for grooving is included in bridge deck grooving quantities.

REINFORCING STEEL SCHEDULE

Mark	No.	Size	Pin ø	Length	Location
AS0801	·	#8	—	21'-6"	Bottom longitudinal
AS0502	·	#5	—	21'-6"	Top longitudinal
AS0503	·	#5	—	·	Top and bottom transverse
AS0504	·	#5	—	·	Top and bottom transverse
·	·	·	·	·	·
·	·	·	·	·	·
·	·	·	·	·	·
·	·	·	·	·	·

ESTIMATED QUANTITIES

	Concrete Class A4 Bridge Approach Slab ⊗ CY	Reinforcing Steel Bridge Approach Slab ⊗ LB
Abutment A	·	·
Abutment B	·	·
Totals	·	·

⊗ Denotes items to be paid for on basis of plan quantities in accordance with current Road and Bridge Specifications.

bas18r.dgn

05-03-2013

BAS-18R

Sealed and Signed by:
Julius F.J. Volgyi Jr.
Lic. No. 010487
On the date of
May 3, 2013

A copy of the original sealed and signed standard drawing is on file in the Central Office.

VDOT S&B DIVISION
RICHMOND, VA
STRUCTURAL ENGINEER

No.	Description	Date
	Revisions	

COMMONWEALTH OF VIRGINIA
DEPARTMENT OF TRANSPORTATION

STRUCTURE AND BRIDGE DIVISION

APPROACH SLABS

Designed: S&B DIV
Drawn: S&B DIV
Checked: S&B DIV

Date

Plan No. BAS-18R

Sheet No.

Scale as noted

©2013, Commonwealth of Virginia

APPROACH SLAB

SKEW OVER 20° TO 35°, SKEW RIGHT
STRUCTURE WITH SIDEWALKS;
APPROACH ROADWAY CONCRETE

NOTES TO DESIGNER:

Standard to be used when approach roadway is concrete (not asphalt concrete).

Standard is for: Skew over 20° to 35°, skew right
Structure with sidewalks

ADD THE FOLLOWING NOTES, DIMENSIONS, DETAILS, ETC. TO STANDARD:

PLAN:

Enter skew angle, width dimension and number of spaces for AS bars (top and bottom). Check details of corner(s) where approach slab rests on back of abutment backwall. Modify details as needed when using integral abutments, elephant ears, etc. Modify when sidewalk is only on one side.

REINFORCING STEEL SCHEDULE:

Enter number of bars and length of AS0503 and AS0504 bars.

ESTIMATED QUANTITIES:

Enter concrete and reinforcing steel quantities for Abutments A and B as well as Totals.

STATE	FEDERAL AID ROUTE	FEDERAL AID PROJECT	STATE ROUTE	STATE PROJECT	SHEET NO.
VA.	—				

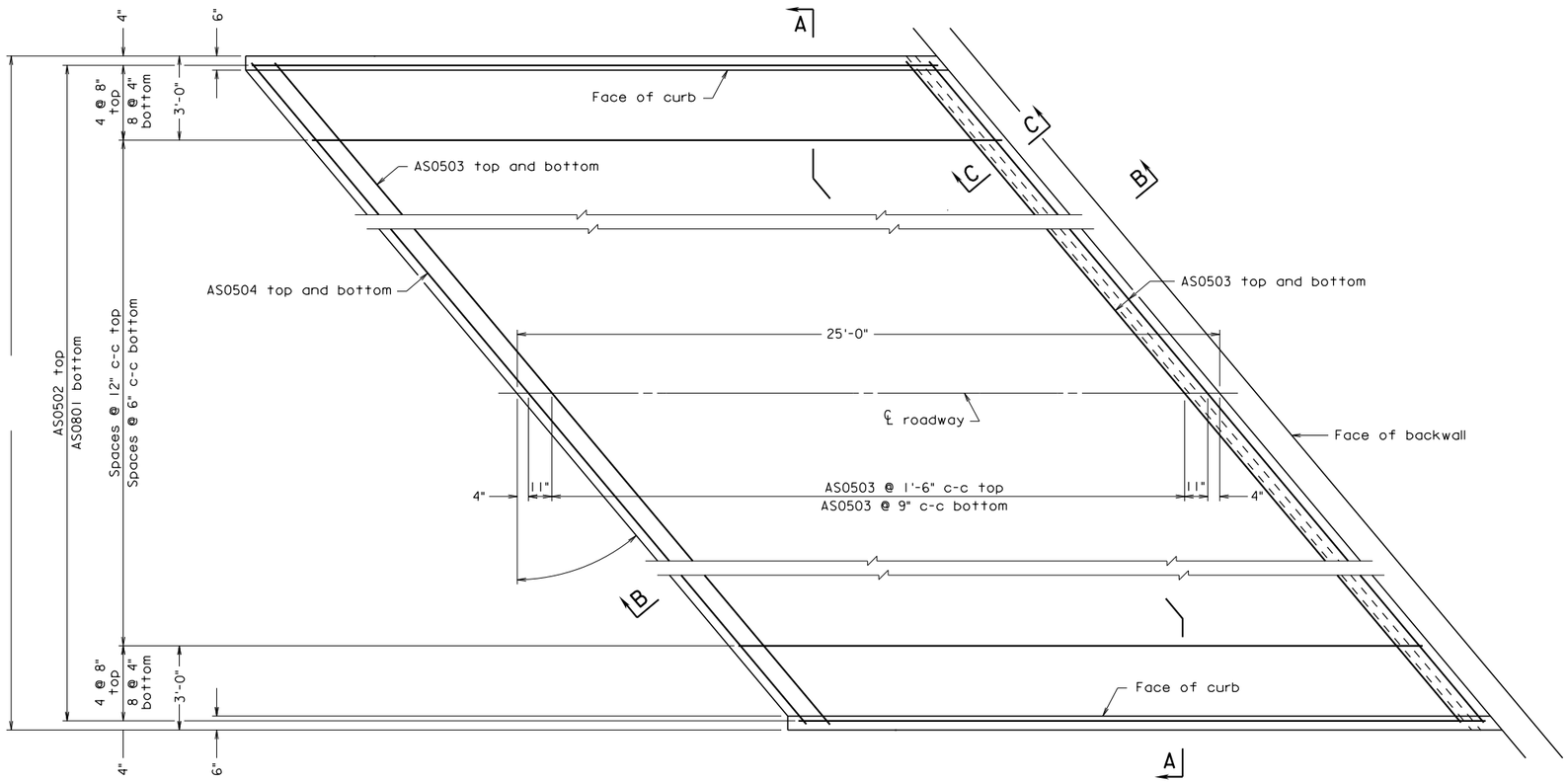

PLAN
Scale: 3/8" = 1'-0"

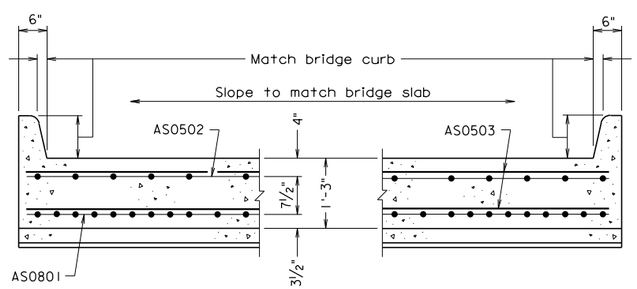

SECTION A-A
Scale: 3/4" = 1'-0"

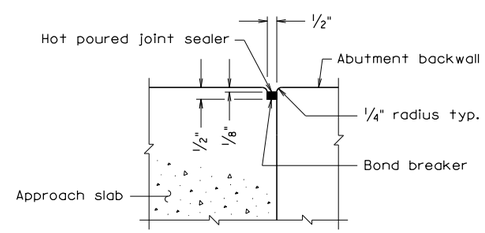

SECTION C-C
Scale: 3" = 1'-0"

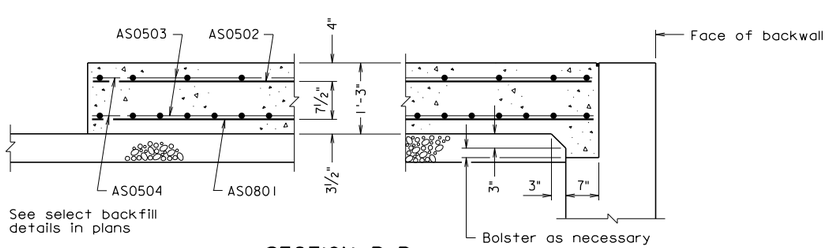

SECTION B-B
Scale: 3/4" = 1'-0"

Notes:

All joints that are to be sealed shall be free of cracked and spalled areas and their faces shall be free of all foreign matter, curing compound, oils, greases and dirt. All faces must be sandblasted or brushed with a mechanical rotary wire brush. Just prior to sealing, the joint shall be blown out with oil-free compressed air.

Deformed reinforcing bars shall conform to ASTM A615, Grade 60. All reinforcing bar dimensions except for bending diagram are to centers of bars.

See Road and Bridge Standards, Section 300 for dowels in joint between approach slab and concrete pavement.

Prime aggregate base material with 0.35 gal. per sq. yd. Liquid Asphalt Material Type RC-70, RC-250 or MC-250 if aggregate base is exposed for more than two weeks.

Grooving shall be in accordance with VDOT Road and Bridge Specifications, Section 404.07 (f), Class 6, Bridge Deck Finish. Payment for grooving is included in bridge deck grooving quantities.

REINFORCING STEEL SCHEDULE

Mark	No.	Size	Pin ø	Length	Location
AS0801	·	#8	—	24'-5"	Bottom longitudinal
AS0502	·	#5	—	24'-5"	Top longitudinal
AS0503	·	#5	—	·	Top and bottom transverse
AS0504	·	#5	—	·	Top and bottom transverse
·	·	·	·	·	·
·	·	·	·	·	·
·	·	·	·	·	·
·	·	·	·	·	·

ESTIMATED QUANTITIES

	Concrete Class A4 Bridge Approach Slab ⊗ CY	Reinforcing Steel Bridge Approach Slab ⊗ LB
Abutment A	·	·
Abutment B	·	·
Totals	·	·

⊗ Denotes items to be paid for on basis of plan quantities in accordance with current Road and Bridge Specifications.

bas19l.dgn

BAS-19L 05-03-2013

Sealed and Signed by:
Julius F.J. Volgyi Jr.
Lic. No. 010487
On the date of
May 3, 2013

A copy of the original sealed and signed standard drawing is on file in the Central Office.

VDOT S&B DIVISION
RICHMOND, VA
STRUCTURAL ENGINEER

No.	Description	Date

Revisions

Scale as noted

© 2013, Commonwealth of Virginia

COMMONWEALTH OF VIRGINIA
DEPARTMENT OF TRANSPORTATION

STRUCTURE AND BRIDGE DIVISION

APPROACH SLABS

Designed: S&B DIV
Drawn: S&B DIV
Checked: S&B DIV

Date

Plan No. BAS-19L

Sheet No.

APPROACH SLAB

SKEW OVER 35° TO 45°, SKEW LEFT
STRUCTURE WITH SIDEWALKS;
APPROACH ROADWAY CONCRETE

NOTES TO DESIGNER:

Standard to be used when approach roadway is concrete (not asphalt concrete).

Standard is for: Skew over 35° to 45°, skew left
Structure with sidewalks

ADD THE FOLLOWING NOTES, DIMENSIONS, DETAILS, ETC. TO STANDARD:

PLAN:

Enter skew angle, width dimension and number of spaces for AS bars (top and bottom). Check details of corner(s) where approach slab rests on back of abutment backwall. Modify details as needed when using elephant ears, etc. Modify when sidewalk is only on one side.

REINFORCING STEEL SCHEDULE:

Enter number of bars and length of AS0503 and AS0504 bars.

ESTIMATED QUANTITIES:

Enter concrete and reinforcing steel quantities for Abutments A and B as well as Totals.

STATE	FEDERAL AID ROUTE	FEDERAL AID PROJECT	STATE ROUTE	STATE PROJECT	SHEET NO.
VA.	—				

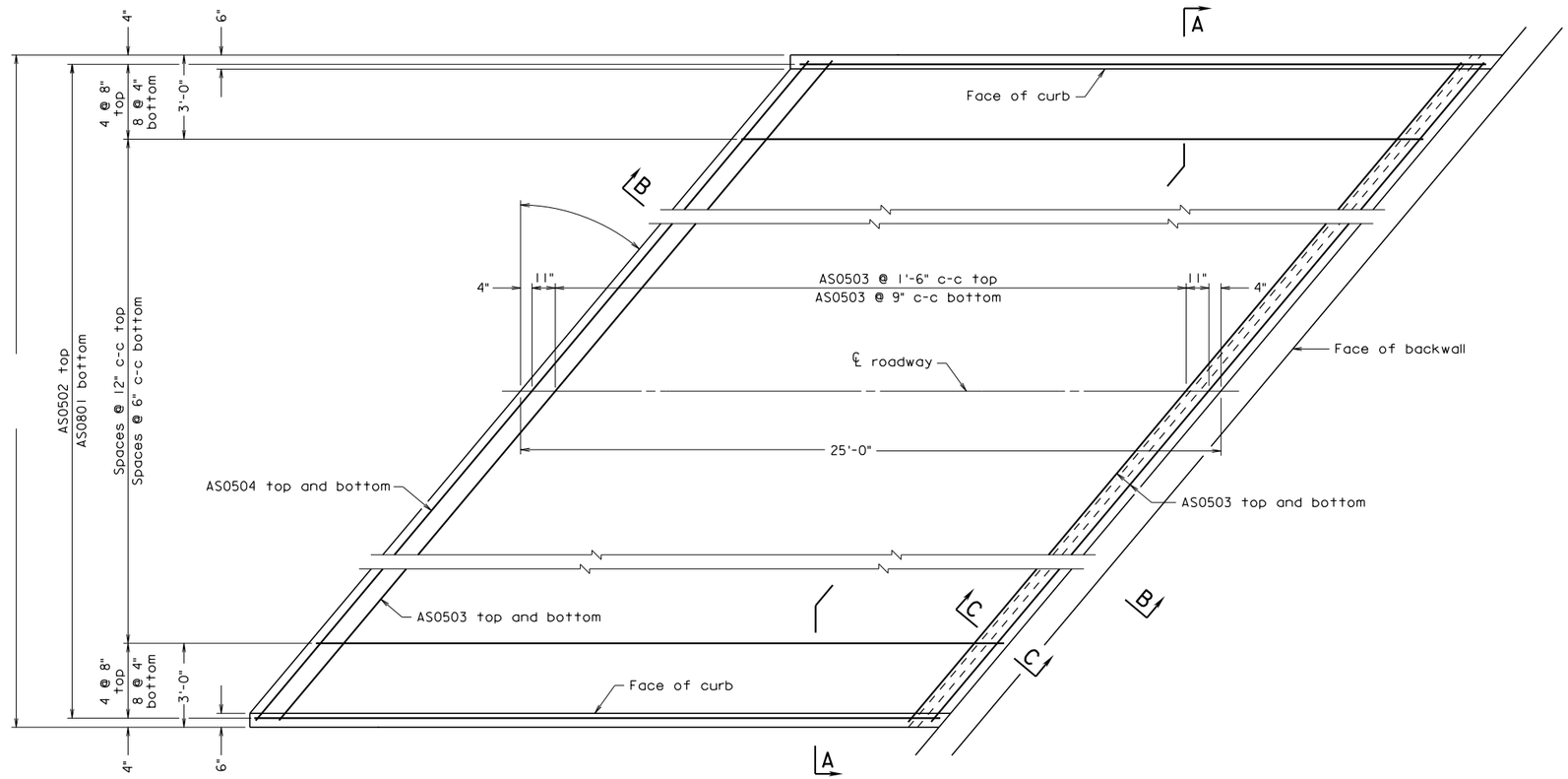

PLAN
Scale: 3/8" = 1'-0"

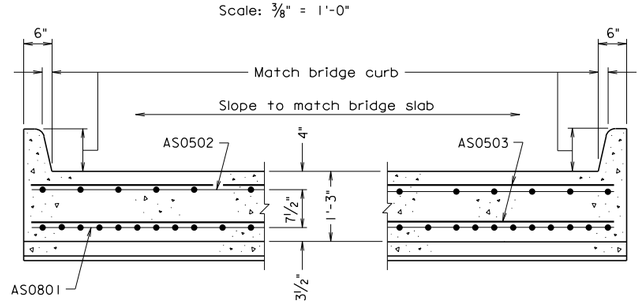

SECTION A-A
Scale: 3/4" = 1'-0"

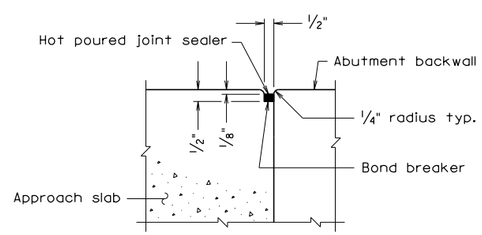

SECTION C-C
Scale: 3" = 1'-0"

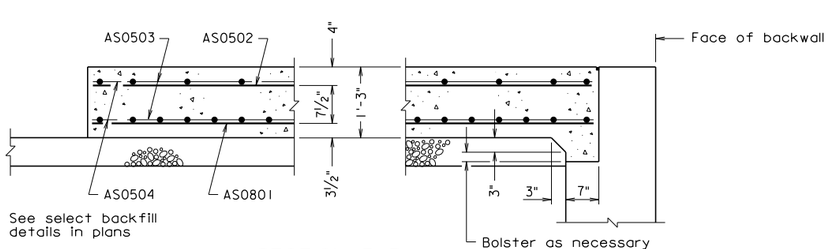

SECTION B-B
Scale: 3/4" = 1'-0"

Notes:

All joints that are to be sealed shall be free of cracked and spalled areas and their faces shall be free of all foreign matter, curing compound, oils, greases and dirt. All faces must be sandblasted or brushed with a mechanical rotary wire brush. Just prior to sealing, the joint shall be blown out with oil-free compressed air.

Deformed reinforcing bars shall conform to ASTM A615, Grade 60. All reinforcing bar dimensions except for bending diagram are to centers of bars.

See Road and Bridge Standards, Section 300 for dowels in joint between approach slab and concrete pavement.

Prime aggregate base material with 0.35 gal. per sq. yd. Liquid Asphalt Material Type RC-70, RC-250 or MC-250 if aggregate base is exposed for more than two weeks.

Grooving shall be in accordance with VDOT Road and Bridge Specifications, Section 404.07 (f), Class 6, Bridge Deck Finish. Payment for grooving is included in bridge deck grooving quantities.

REINFORCING STEEL SCHEDULE

Mark	No.	Size	Pin ø	Length	Location
AS0801	·	#8	—	24'-5"	Bottom longitudinal
AS0502	·	#5	—	24'-5"	Top longitudinal
AS0503	·	#5	—	·	Top and bottom transverse
AS0504	·	#5	—	·	Top and bottom transverse
·	·	·	·	·	·
·	·	·	·	·	·
·	·	·	·	·	·
·	·	·	·	·	·

ESTIMATED QUANTITIES

	Concrete Class A4 Bridge Approach Slab ⊗ CY	Reinforcing Steel Bridge Approach Slab ⊗ LB
Abutment A	·	·
Abutment B	·	·
Totals	·	·

⊗ Denotes items to be paid for on basis of plan quantities in accordance with current Road and Bridge Specifications.

bas19r.dgn

BAS-19R 05-03-2013

Sealed and Signed by:
Julius F.J. Volgyi Jr.
Lic. No. 010487
On the date of
May 3, 2013

A copy of the original sealed and signed standard drawing is on file in the Central Office.

VDOT S&B DIVISION
RICHMOND, VA
STRUCTURAL ENGINEER

No.	Description	Date
	Revisions	

Scale as noted

© 2013, Commonwealth of Virginia

COMMONWEALTH OF VIRGINIA
DEPARTMENT OF TRANSPORTATION

STRUCTURE AND BRIDGE DIVISION

APPROACH SLABS

Designed: S&B DIV
Drawn: S&B DIV
Checked: S&B DIV

Date

Plan No. BAS-19R

Sheet No.

APPROACH SLAB

SKEW OVER 35° TO 45°, SKEW RIGHT
STRUCTURE WITH SIDEWALKS;
APPROACH ROADWAY CONCRETE

NOTES TO DESIGNER:

Standard to be used when approach roadway is concrete (not asphalt concrete).

Standard is for: Skew over 35° to 45°, skew right
Structure with sidewalks

ADD THE FOLLOWING NOTES, DIMENSIONS, DETAILS, ETC. TO STANDARD:

PLAN:

Enter skew angle, width dimension and number of spaces for AS bars (top and bottom). Check details of corner(s) where approach slab rests on back of abutment backwall. Modify details as needed when using elephant ears, etc. Modify when sidewalk is only on one side.

REINFORCING STEEL SCHEDULE:

Enter number of bars and length of AS0503 and AS0504 bars.

ESTIMATED QUANTITIES:

Enter concrete and reinforcing steel quantities for Abutments A and B as well as Totals.

STATE	FEDERAL AID ROUTE	FEDERAL AID PROJECT	STATE ROUTE	STATE PROJECT	SHEET NO.
VA.	—				

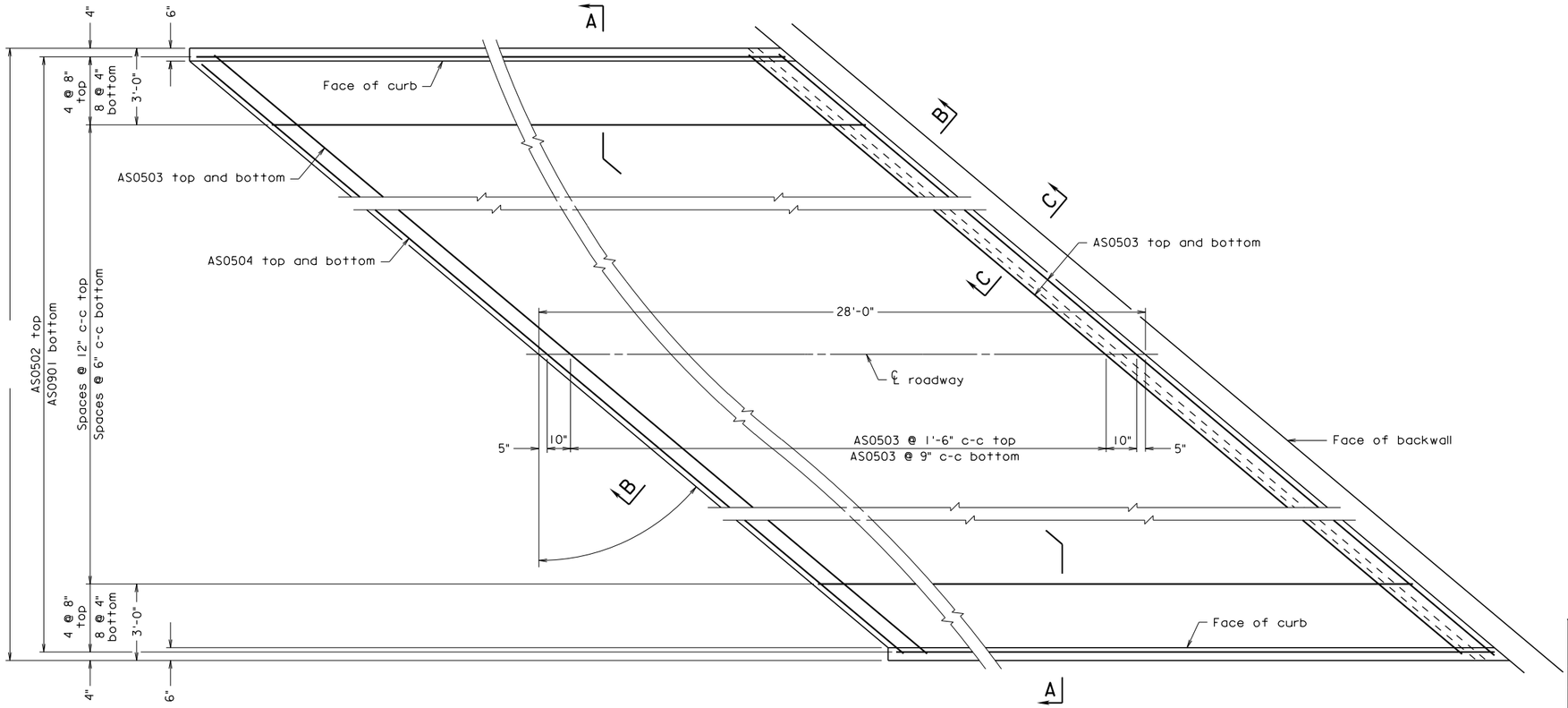

PLAN
Scale: 3/8" = 1'-0"

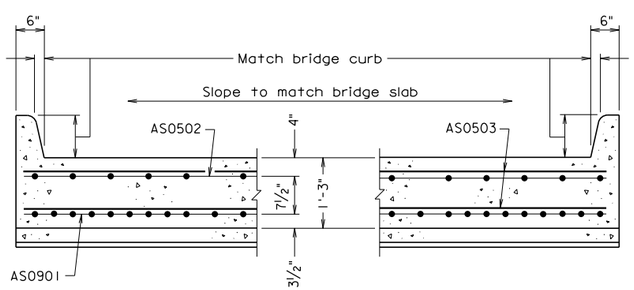

SECTION A-A
Scale: 3/4" = 1'-0"

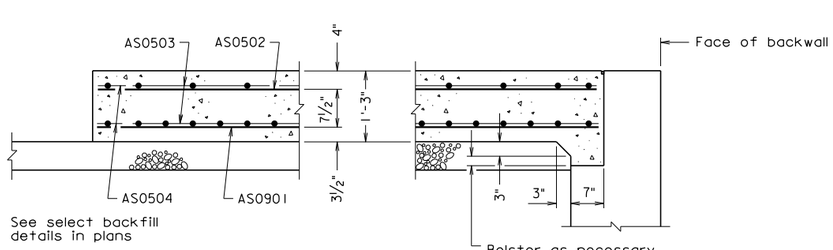

SECTION B-B
Scale: 3/4" = 1'-0"

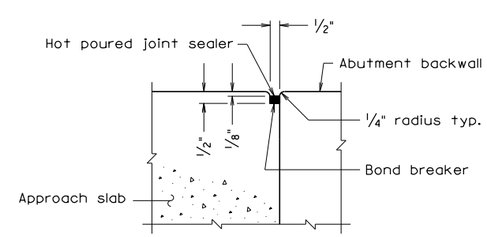

SECTION C-C
Scale: 3" = 1'-0"

Notes:

All joints that are to be sealed shall be free of cracked and spalled areas and their faces shall be free of all foreign matter, curing compound, oils, greases and dirt. All faces must be sandblasted or brushed with a mechanical rotary wire brush. Just prior to sealing, the joint shall be blown out with oil-free compressed air.

Deformed reinforcing bars shall conform to ASTM A615, Grade 60. All reinforcing bar dimensions except for bending diagram are to centers of bars.

See Road and Bridge Standards, Section 300 for dowels in joint between approach slab and concrete pavement.

Prime aggregate base material with 0.35 gal. per sq. yd. Liquid Asphalt Material Type RC-70, RC-250 or MC-250 if aggregate base is exposed for more than two weeks.

Grooving shall be in accordance with VDOT Road and Bridge Specifications, Section 404.07 (f), Class 6, Bridge Deck Finish. Payment for grooving is included in bridge deck grooving quantities.

REINFORCING STEEL SCHEDULE

Mark	No.	Size	Pin ø	Length	Location
AS0901	·	#9	—	27'-5"	Bottom longitudinal
AS0502	·	#5	—	27'-5"	Top longitudinal
AS0503	·	#5	—	·	Top and bottom transverse
AS0504	·	#5	·	·	Top and bottom transverse
·	·	·	·	·	·
·	·	·	·	·	·
·	·	·	·	·	·
·	·	·	·	·	·

ESTIMATED QUANTITIES

	Concrete Class A4 Bridge Approach Slab ⊗ CY	Reinforcing Steel Bridge Approach Slab ⊗ LB
Abutment A	·	·
Abutment B	·	·
Totals	·	·

⊗ Denotes items to be paid for on basis of plan quantities in accordance with current Road and Bridge Specifications.

bas20l.dgn

05-03-2013

BAS-20L

Sealed and Signed by:
Julius F.J. Volgyi Jr.
Lic. No. 010487
On the date of
May 3, 2013

A copy of the original sealed and signed standard drawing is on file in the Central Office.

VDOT S&B DIVISION
RICHMOND, VA
STRUCTURAL ENGINEER

No.	Description	Date
	Revisions	

COMMONWEALTH OF VIRGINIA
DEPARTMENT OF TRANSPORTATION

STRUCTURE AND BRIDGE DIVISION

APPROACH SLABS

Designed: S&B DIV
Drawn: S&B DIV
Checked: S&B DIV

Date

Plan No. BAS-20L

Sheet No.

Scale as noted

©2013, Commonwealth of Virginia

APPROACH SLAB

SKEW OVER 45° TO 50°, SKEW LEFT
STRUCTURE WITH SIDEWALKS;
APPROACH ROADWAY CONCRETE

NOTES TO DESIGNER:

Standard to be used when approach roadway is concrete (not asphalt concrete).

Standard is for: Skew over 45° to 50°, skew left
Structure with sidewalks

ADD THE FOLLOWING NOTES, DIMENSIONS, DETAILS, ETC. TO STANDARD:

PLAN:

Enter skew angle, width dimension and number of spaces for AS bars (top and bottom). Check details of corner(s) where approach slab rests on back of abutment backwall. Modify details as needed when using elephant ears, etc. Modify when sidewalk is only on one side.

REINFORCING STEEL SCHEDULE:

Enter number of bars and length of AS0503 and AS0504 bars.

ESTIMATED QUANTITIES:

Enter concrete and reinforcing steel quantities for Abutments A and B as well as Totals.

STATE	FEDERAL AID ROUTE	FEDERAL AID PROJECT	STATE ROUTE	STATE PROJECT	SHEET NO.
VA.	—				

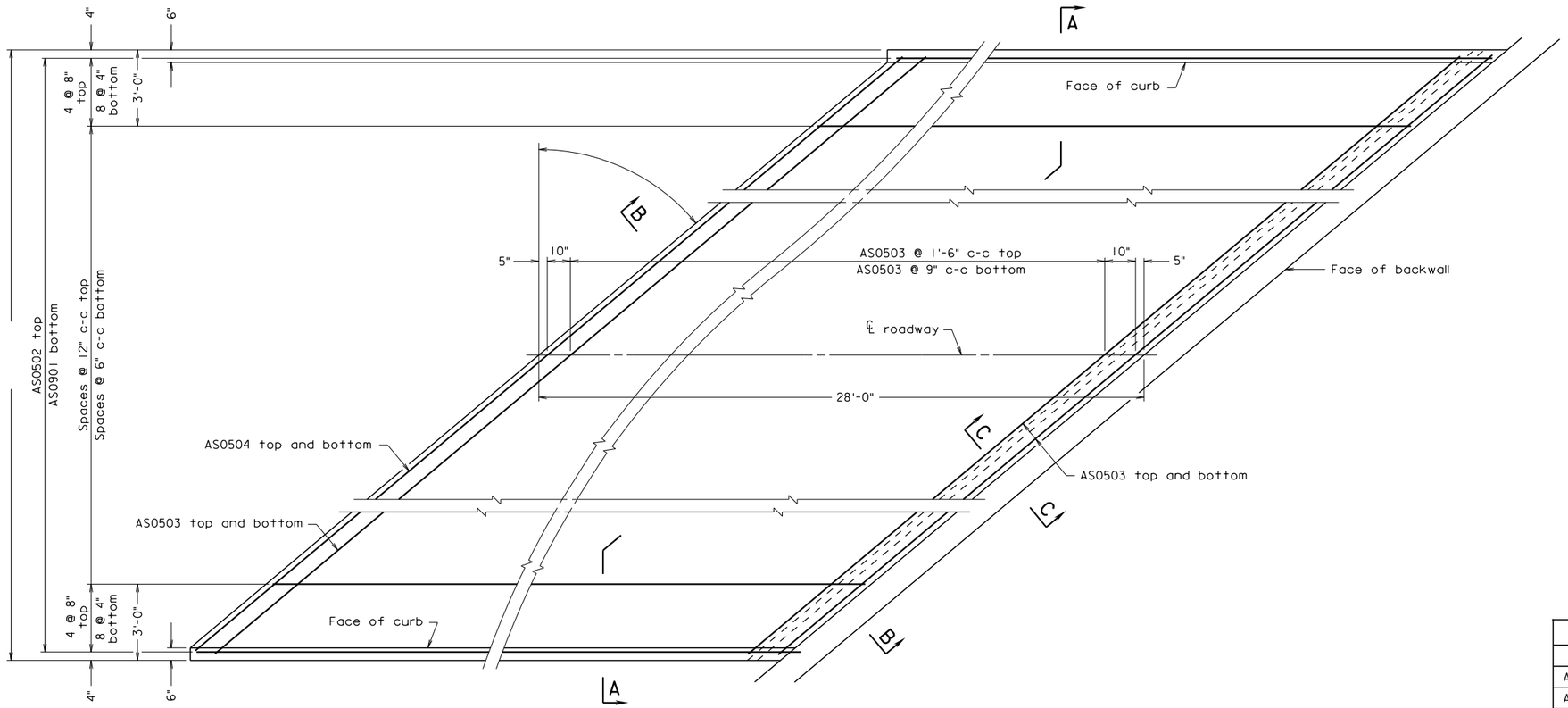

PLAN
Scale: 3/8" = 1'-0"

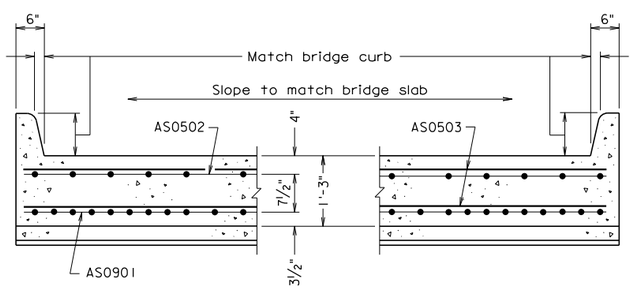

SECTION A-A
Scale: 3/4" = 1'-0"

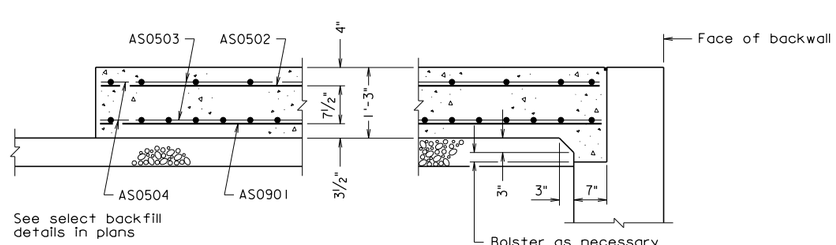

SECTION B-B
Scale: 3/4" = 1'-0"

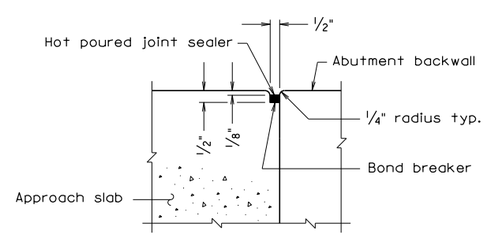

SECTION C-C
Scale: 3" = 1'-0"

Notes:

All joints that are to be sealed shall be free of cracked and spalled areas and their faces shall be free of all foreign matter, curing compound, oils, greases and dirt. All faces must be sandblasted or brushed with a mechanical rotary wire brush. Just prior to sealing, the joint shall be blown out with oil-free compressed air.

Deformed reinforcing bars shall conform to ASTM A615, Grade 60. All reinforcing bar dimensions except for bending diagram are to centers of bars.

See Road and Bridge Standards, Section 300 for dowels in joint between approach slab and concrete pavement.

Prime aggregate base material with 0.35 gal. per sq. yd. Liquid Asphalt Material Type RC-70, RC-250 or MC-250 if aggregate base is exposed for more than two weeks.

Grooving shall be in accordance with VDOT Road and Bridge Specifications, Section 404.07 (f), Class 6, Bridge Deck Finish. Payment for grooving is included in bridge deck grooving quantities.

REINFORCING STEEL SCHEDULE

Mark	No.	Size	Pin ø	Length	Location
AS0901	·	#9	—	27'-5"	Bottom longitudinal
AS0502	·	#5	—	27'-5"	Top longitudinal
AS0503	·	#5	—	·	Top and bottom transverse
AS0504	·	#5	·	·	Top and bottom transverse
·	·	·	·	·	·
·	·	·	·	·	·
·	·	·	·	·	·
·	·	·	·	·	·

ESTIMATED QUANTITIES

	Concrete Class A4 Bridge Approach Slab ⊗ CY	Reinforcing Steel Bridge Approach Slab ⊗ LB
Abutment A	·	·
Abutment B	·	·
Totals	·	·

⊗ Denotes items to be paid for on basis of plan quantities in accordance with current Road and Bridge Specifications.

bas20r.dgn

05-03-2013

BAS-20R

Sealed and Signed by:
Julius F.J. Volgyi Jr.
Lic. No. 010487
On the date of
May 3, 2013

A copy of the original sealed and signed standard drawing is on file in the Central Office.

VDOT S&B DIVISION
RICHMOND, VA
STRUCTURAL ENGINEER

No.	Description	Date
	Revisions	

COMMONWEALTH OF VIRGINIA
DEPARTMENT OF TRANSPORTATION

STRUCTURE AND BRIDGE DIVISION

APPROACH SLABS

Designed: S&B DIV
Drawn: S&B DIV
Checked: S&B DIV

Date

Plan No. BAS-20R

Sheet No.

Scale as noted

©2013, Commonwealth of Virginia

APPROACH SLAB

SKEW OVER 45° TO 50°, SKEW RIGHT
STRUCTURE WITH SIDEWALKS;
APPROACH ROADWAY CONCRETE

NOTES TO DESIGNER:

Standard to be used when approach roadway is concrete (not asphalt concrete).

Standard is for: Skew over 45° to 50°, skew right
Structure with sidewalks

ADD THE FOLLOWING NOTES, DIMENSIONS, DETAILS, ETC. TO STANDARD:

PLAN:

Enter skew angle, width dimension and number of spaces for AS bars (top and bottom). Check details of corner(s) where approach slab rests on back of abutment backwall. Modify details as needed when using elephant ears, etc. Modify when sidewalk is only on one side.

REINFORCING STEEL SCHEDULE:

Enter number of bars and length of AS0503 and AS0504 bars.

ESTIMATED QUANTITIES:

Enter concrete and reinforcing steel quantities for Abutments A and B as well as Totals.

STATE	FEDERAL AID ROUTE	FEDERAL AID PROJECT	STATE ROUTE	STATE PROJECT	SHEET NO.
VA.	—				

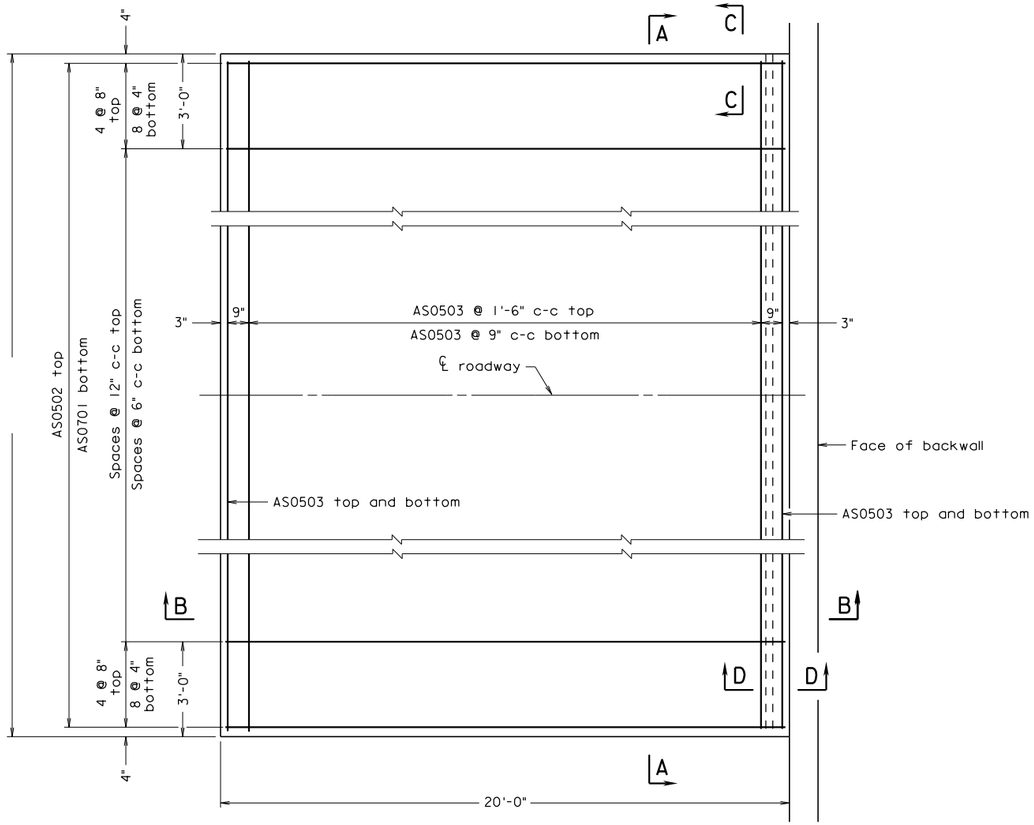

PLAN
Scale: 3/8" = 1'-0"

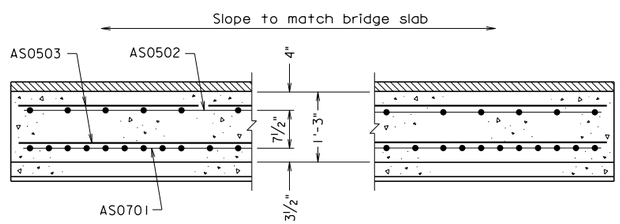

SECTION A-A
Scale: 3/4" = 1'-0"

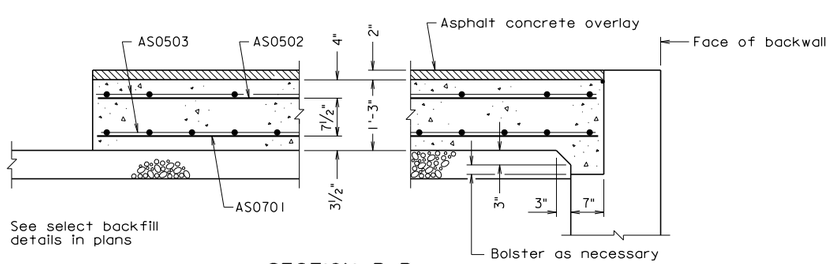

SECTION B-B
Scale: 3/4" = 1'-0"

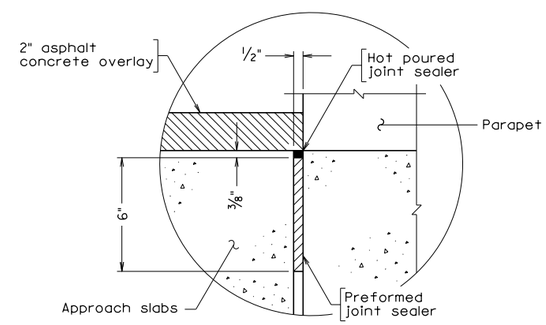

SECTION C-C
Scale: 3" = 1'-0"

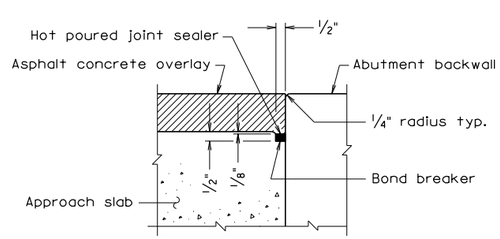

SECTION D-D
Scale: 3" = 1'-0"

Notes:

All joints that are to be sealed shall be free of cracked and spalled areas and their faces shall be free of all foreign matter, curing compound, oils, greases and dirt. All faces must be sandblasted or brushed with a mechanical rotary wire brush. Just prior to sealing, the joint shall be blown out with oil-free compressed air.

Deformed reinforcing bars shall conform to ASTM A615, Grade 60. All reinforcing bar dimensions except for bending diagram are to centers of bars.

Prime aggregate base material with 0.35 gal. per sq. yd. Liquid Asphalt Material Type RC-70, RC-250 or MC-250 if aggregate base is exposed for more than two weeks. Cost included in select backfill.

No grooving is required. The finish shall include a multi-ply damp fabric dragged over the approach slab surface to provide a gritty texture.

REINFORCING STEEL SCHEDULE

Mark	No.	Size	Pin ø	Length	Location
AS0701	·	#7	—	19'-8"	Bottom longitudinal
AS0502	·	#5	—	19'-8"	Top longitudinal
AS0503	·	#5	—	·	Top and bottom transverse
·	·	·	·	·	·
·	·	·	·	·	·
·	·	·	·	·	·
·	·	·	·	·	·
·	·	·	·	·	·

ESTIMATED QUANTITIES

	Concrete Class A4 Bridge Approach Slab ⊗ CY	Reinforcing Steel Bridge Approach Slab ⊗ LB	Asphalt Concrete Type Ton
Abutment A	·	·	·
Abutment B	·	·	·
Totals	·	·	·

⊗ Denotes items to be paid for on basis of plan quantities in accordance with current Road and Bridge Specifications.

basl1a.dgn

05-03-2013

BAS-11A

Sealed and Signed by:
Julius F.J. Volgyi Jr.
Lic. No. 010487
On the date of
May 3, 2013

A copy of the original sealed and signed standard drawing is on file in the Central Office.

VDOT S&B DIVISION
RICHMOND, VA
STRUCTURAL ENGINEER

No.	Description	Date

Revisions

Scale as noted

© 2013, Commonwealth of Virginia

COMMONWEALTH OF VIRGINIA
DEPARTMENT OF TRANSPORTATION

STRUCTURE AND BRIDGE DIVISION

APPROACH SLABS

Designed: S&B DIV
Drawn: S&B DIV
Checked: S&B DIV

Date

Plan No. BAS-11A

Sheet No.

APPROACH SLAB

STRAIGHT CROSSING;
APPROACH ROADWAY ASPHALT CONCRETE

NOTES TO DESIGNER:

Standard to be used when approach roadway is to be constructed of asphalt concrete.

Standard is for: 0° Skew

ADD THE FOLLOWING NOTES, DIMENSIONS, DETAILS, ETC. TO STANDARD:

PLAN:

Enter skew angle, width dimension and number of spaces for AS bars (top and bottom). Modify details as needed when using integral abutments, elephant ear wing walls, etc.

REINFORCING STEEL SCHEDULE:

Enter number of bars and length of AS0503 bar.

ESTIMATED Quantities:

Indicate type of asphalt concrete overlay (in heading).

Enter concrete, reinforcing steel and asphalt concrete quantities for Abutments A and B and Totals.

STATE	FEDERAL AID ROUTE	FEDERAL AID PROJECT	STATE ROUTE	STATE PROJECT	SHEET NO.
VA.	—				

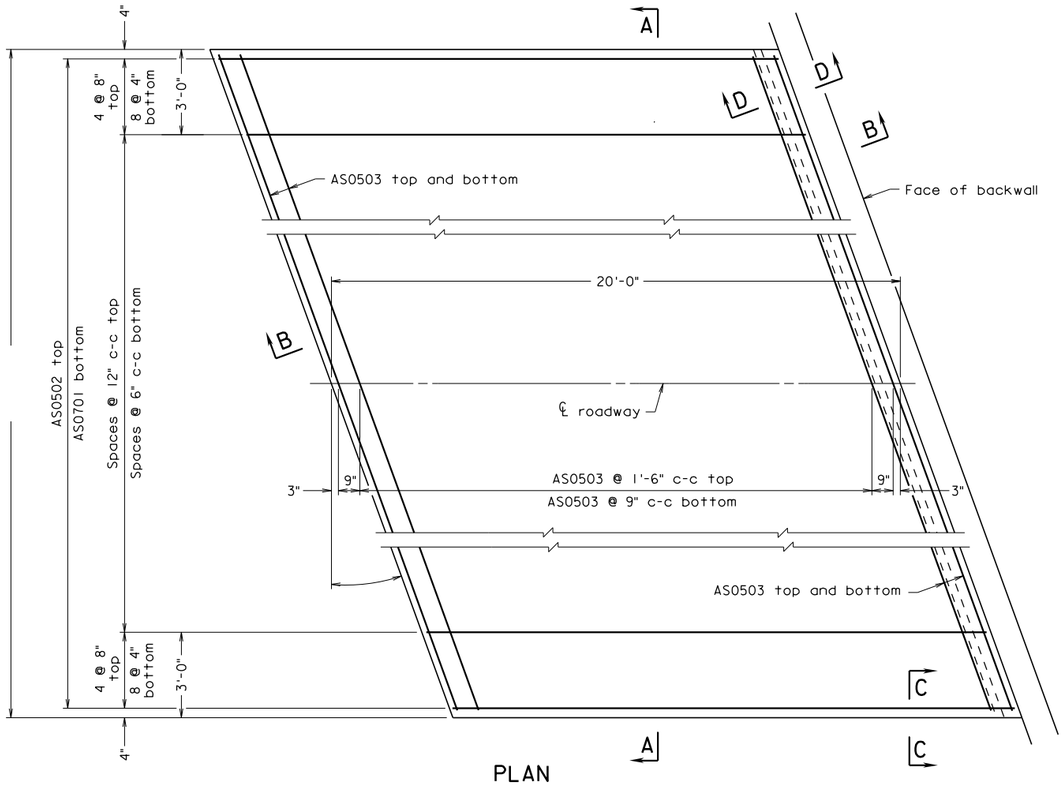

PLAN
Scale: 3/8" = 1'-0"

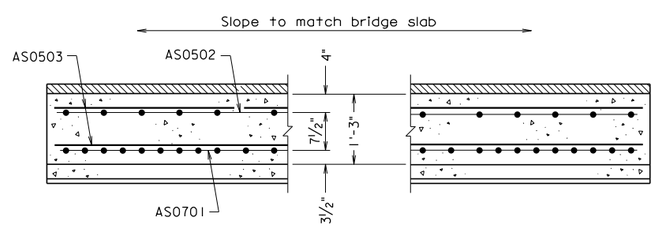

SECTION A-A
Scale: 3/4" = 1'-0"

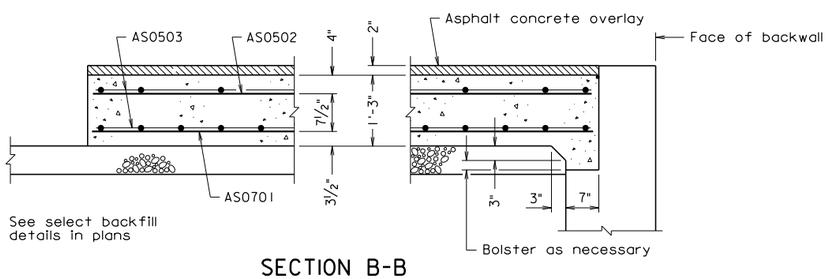

SECTION B-B
Scale: 3/4" = 1'-0"

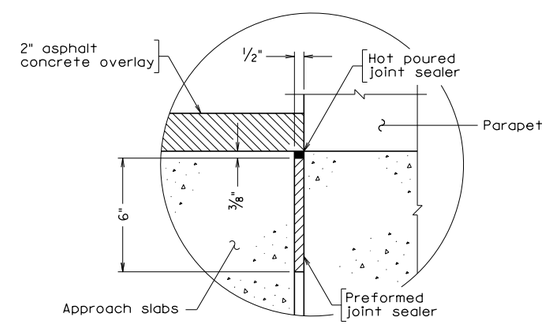

SECTION C-C
Scale: 3" = 1'-0"

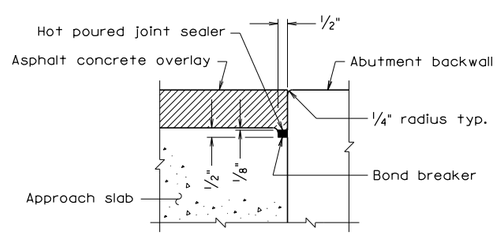

SECTION D-D
Scale: 3" = 1'-0"

Notes:

All joints that are to be sealed shall be free of cracked and spalled areas and their faces shall be free of all foreign matter, curing compound, oils, greases and dirt. All faces must be sandblasted or brushed with a mechanical rotary wire brush. Just prior to sealing, the joint shall be blown out with oil-free compressed air.

Deformed reinforcing bars shall conform to ASTM A615, Grade 60. All reinforcing bar dimensions except for bending diagram are to centers of bars.

Prime aggregate base material with 0.35 gal. per sq. yd. Liquid Asphalt Material Type RC-70, RC-250 or MC-250 if aggregate base is exposed for more than two weeks. Cost included in select backfill.

No grooving is required. The finish shall include a multi-ply damp fabric dragged over the approach slab surface to provide a gritty texture.

REINFORCING STEEL SCHEDULE

Mark	No.	Size	Pin ø	Length	Location
AS0701	·	#7	—	19'-8"	Bottom longitudinal
AS0502	·	#5	—	19'-8"	Top longitudinal
AS0503	·	#5	—	·	Top and bottom transverse
·	·	·	·	·	·
·	·	·	·	·	·
·	·	·	·	·	·
·	·	·	·	·	·
·	·	·	·	·	·

ESTIMATED QUANTITIES

	Concrete Class A4 Bridge Approach Slab ⊗ CY	Reinforcing Steel Bridge Approach Slab ⊗ LB	Asphalt Concrete Type Ton
Abutment A	·	·	·
Abutment B	·	·	·
Totals	·	·	·

⊗ Denotes items to be paid for on basis of plan quantities in accordance with current Road and Bridge Specifications.

Scale as noted

©2013, Commonwealth of Virginia

No.	Description	Date
	Revisions	

COMMONWEALTH OF VIRGINIA
DEPARTMENT OF TRANSPORTATION

STRUCTURE AND BRIDGE DIVISION

APPROACH SLABS

Designed: S&B..DIV
Drawn: ....S&B..DIV
Checked: S&B..DIV

Date | Plan No. BAS-12AL | Sheet No.

Sealed and Signed by:
Julius F.J. Volgyi Jr.
Lic. No. 010487
On the date of
May 3, 2013

A copy of the original sealed and signed standard drawing is on file in the Central Office.

VDOT S&B DIVISION
RICHMOND, VA
STRUCTURAL ENGINEER

BAS-12AL 05-03-2013

bas12al.dgn

APPROACH SLAB

SKEW 20° OR LESS, SKEW LEFT;
APPROACH ROADWAY ASPHALT CONCRETE

NOTES TO DESIGNER:

Standard to be used when approach roadway is to be constructed of asphalt concrete.

Standard is for: Skew 20° or less, skew left

ADD THE FOLLOWING NOTES, DIMENSIONS, DETAILS, ETC. TO STANDARD:

PLAN:

Enter skew angle, width dimension and number of spaces for AS bars (top and bottom). Check details of corner(s) where approach slab rests on back of abutment backwall. Modify details as needed when using integral abutments, elephant ear wing walls, etc.

REINFORCING STEEL SCHEDULE:

Enter number of bars and length of AS0503 bar.

ESTIMATED QUANTITIES:

Indicate type of asphalt concrete overlay (in heading).

Enter concrete, reinforcing steel and asphalt concrete quantities for Abutments A and B and Totals.

STATE	FEDERAL AID ROUTE	FEDERAL AID PROJECT	STATE ROUTE	STATE PROJECT	SHEET NO.
VA.	—				

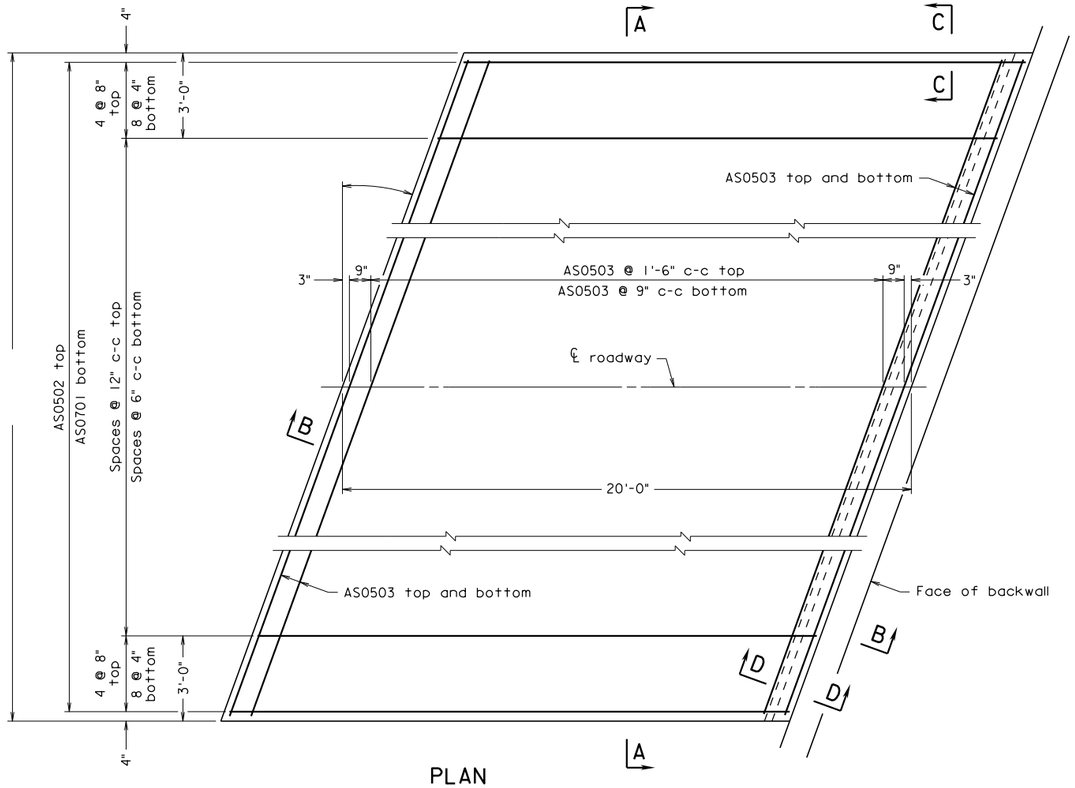

PLAN
Scale: 3/8" = 1'-0"

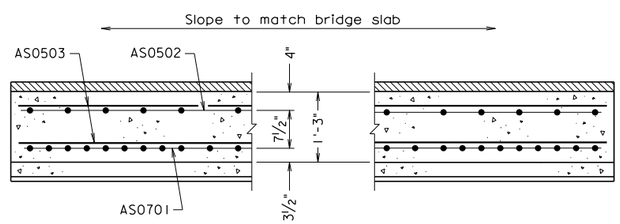

SECTION A-A
Scale: 3/4" = 1'-0"

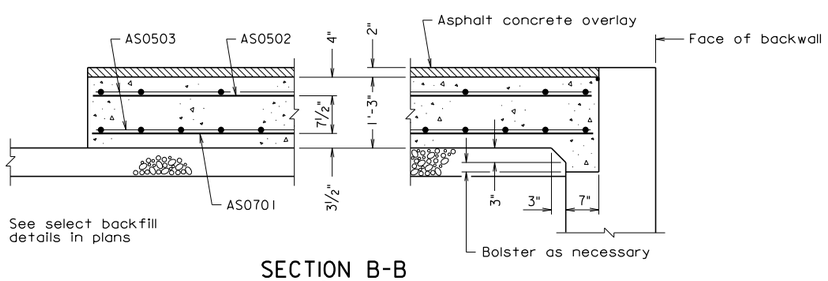

SECTION B-B
Scale: 3/4" = 1'-0"

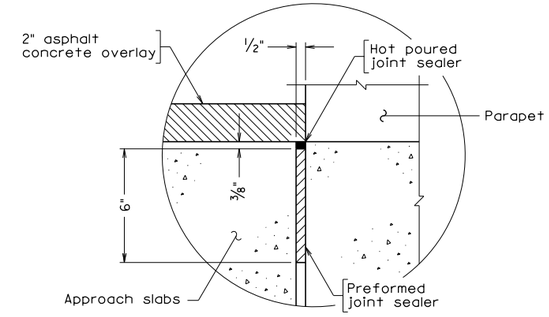

SECTION C-C
Scale: 3" = 1'-0"

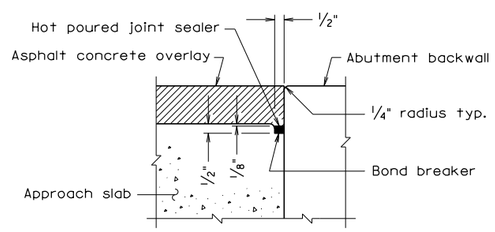

SECTION D-D
Scale: 3" = 1'-0"

Notes:

All joints that are to be sealed shall be free of cracked and spalled areas and their faces shall be free of all foreign matter, curing compound, oils, greases and dirt. All faces must be sandblasted or brushed with a mechanical rotary wire brush. Just prior to sealing, the joint shall be blown out with oil-free compressed air.

Deformed reinforcing bars shall conform to ASTM A615, Grade 60. All reinforcing bar dimensions except for bending diagram are to centers of bars.

Prime aggregate base material with 0.35 gal. per sq. yd. Liquid Asphalt Material Type RC-70, RC-250 or MC-250 if aggregate base is exposed for more than two weeks. Cost included in select backfill.

No grooving is required. The finish shall include a multi-ply damp fabric dragged over the approach slab surface to provide a gritty texture.

REINFORCING STEEL SCHEDULE

Mark	No.	Size	Pin ø	Length	Location
AS0701	·	#7	—	19'-8"	Bottom longitudinal
AS0502	·	#5	—	19'-8"	Top longitudinal
AS0503	·	#5	—	·	Top and bottom transverse
·	·	·	·	·	·
·	·	·	·	·	·
·	·	·	·	·	·
·	·	·	·	·	·
·	·	·	·	·	·

ESTIMATED QUANTITIES

	Concrete Class A4 Bridge Approach Slab ⊗ CY	Reinforcing Steel Bridge Approach Slab ⊗ LB	Asphalt Concrete Type Ton
Abutment A	·	·	·
Abutment B	·	·	·
Totals	·	·	·

⊗ Denotes items to be paid for on basis of plan quantities in accordance with current Road and Bridge Specifications.

Scale as noted

©2013, Commonwealth of Virginia

No.	Description	Date

Revisions

COMMONWEALTH OF VIRGINIA
DEPARTMENT OF TRANSPORTATION

STRUCTURE AND BRIDGE DIVISION

APPROACH SLABS

Designed: S&B DIV
Drawn: S&B DIV
Checked: S&B DIV

Date

Plan No. BAS-12AR

Sheet No.

Sealed and Signed by:
Julius F.J. Volgyi Jr.
Lic. No. 010487
On the date of
May 3, 2013

A copy of the original sealed and signed standard drawing is on file in the Central Office.

VDOT S&B DIVISION
RICHMOND, VA
STRUCTURAL ENGINEER

05-03-2013

BAS-12AR

bas12ar.dgn

APPROACH SLAB

SKEW 20° OR LESS, SKEW RIGHT;
APPROACH ROADWAY ASPHALT CONCRETE

NOTES TO DESIGNER:

Standard to be used when approach roadway is to be constructed of asphalt concrete.

Standard is for: Skew 20° or less, skew right

ADD THE FOLLOWING NOTES, DIMENSIONS, DETAILS, ETC. TO STANDARD:

PLAN:

Enter skew angle, width dimension and number of spaces for AS bars (top and bottom). Check details of corner(s) where approach slab rests on back of abutment backwall. Modify details as needed when using integral abutments, elephant ear wing walls, etc.

REINFORCING STEEL SCHEDULE:

Enter number of bars and length of AS0503 bar.

ESTIMATED QUANTITIES:

Indicate type of asphalt concrete overlay (in heading).

Enter concrete, reinforcing steel and asphalt concrete quantities for Abutments A and B and Totals.

STATE	FEDERAL AID ROUTE	FEDERAL AID PROJECT	STATE ROUTE	STATE PROJECT	SHEET NO.
VA.	—				

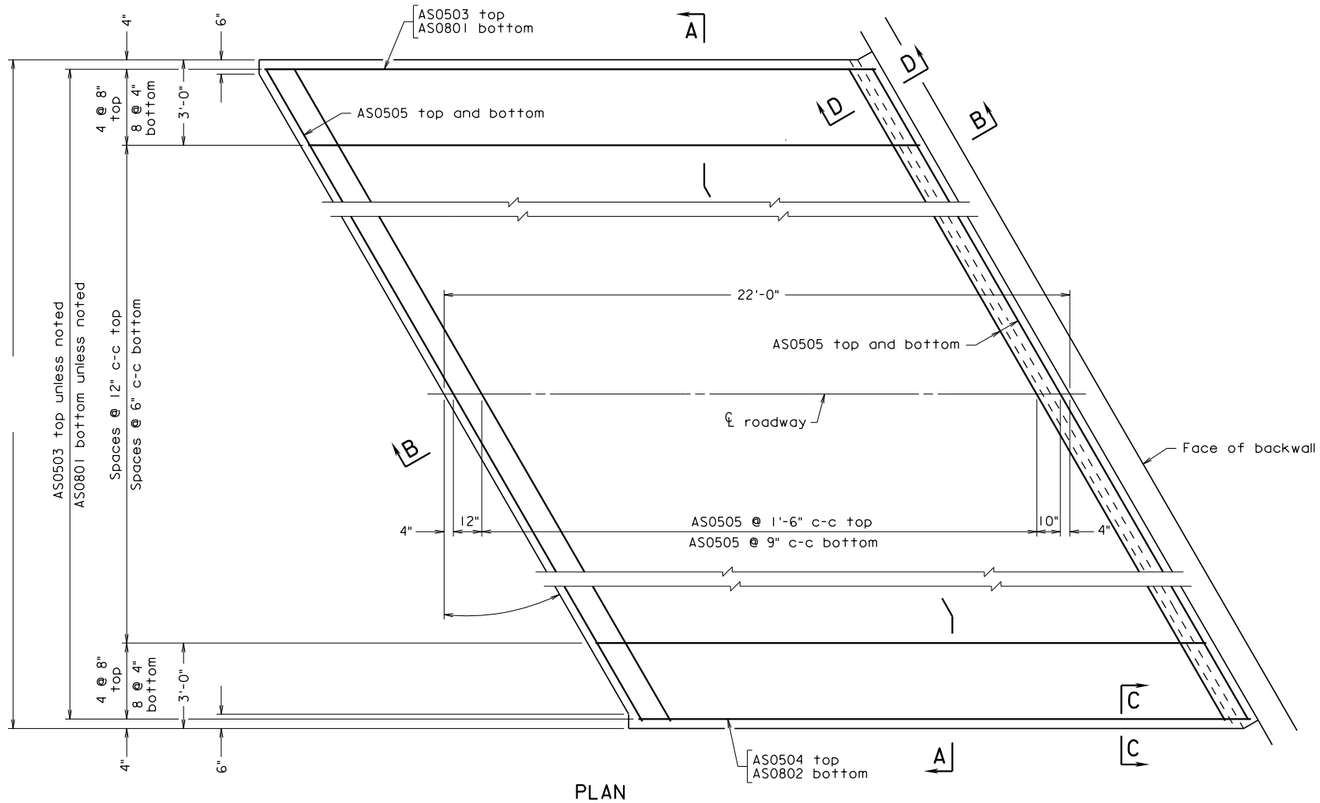

PLAN
Scale: 3/8" = 1'-0"

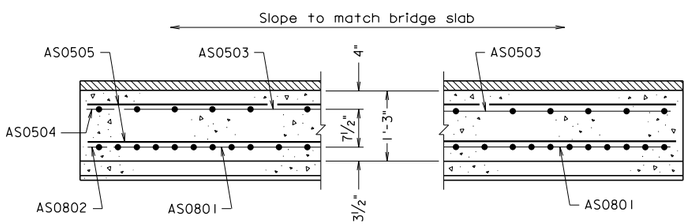

SECTION A-A
Scale: 3/4" = 1'-0"

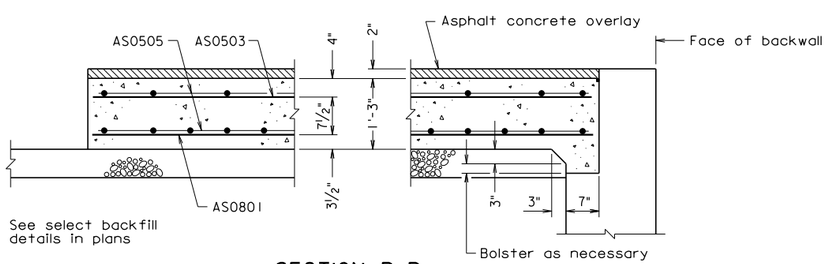

SECTION B-B
Scale: 3/4" = 1'-0"

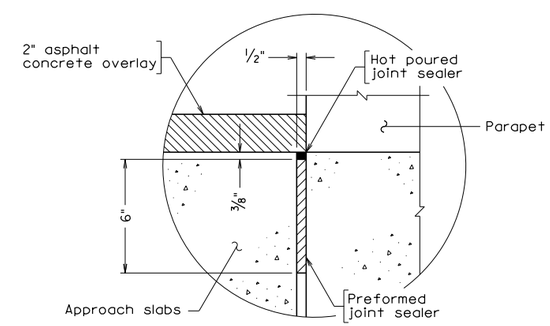

SECTION C-C
Scale: 3" = 1'-0"

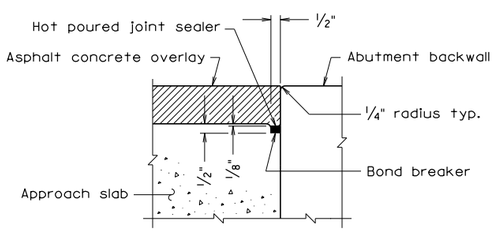

SECTION D-D
Scale: 3" = 1'-0"

Notes:

All joints that are to be sealed shall be free of cracked and spalled areas and their faces shall be free of all foreign matter, curing compound, oils, greases and dirt. All faces must be sandblasted or brushed with a mechanical rotary wire brush. Just prior to sealing, the joint shall be blown out with oil-free compressed air.

Deformed reinforcing bars shall conform to ASTM A615, Grade 60. All reinforcing bar dimensions except for bending diagram are to centers of bars.

Prime aggregate base material with 0.35 gal. per sq. yd. Liquid Asphalt Material Type RC-70, RC-250 or MC-250 if aggregate base is exposed for more than two weeks. Cost included in select backfill.

No grooving is required. The finish shall include a multi-ply damp fabric dragged over the approach slab surface to provide a gritty texture.

REINFORCING STEEL SCHEDULE

Mark	No.	Size	Pin ø	Length	Location
AS0801	·	#8	—	21'-6"	Bottom longitudinal
AS0802	·	#8	—	21'-3"	Bottom longitudinal
AS0503	·	#5	—	21'-6"	Top longitudinal
AS0504	·	#5	—	21'-3"	Top longitudinal
AS0505	·	#5	—	·	Top and bottom transverse
·	·	·	·	·	·
·	·	·	·	·	·
·	·	·	·	·	·

ESTIMATED QUANTITIES

	Concrete Class A4 Bridge Approach Slab ⊗ CY	Reinforcing Steel Bridge Approach Slab ⊗ LB	Asphalt Concrete Type Ton
Abutment A	·	·	·
Abutment B	·	·	·
Totals	·	·	·

⊗ Denotes items to be paid for on basis of plan quantities in accordance with current Road and Bridge Specifications.

bas13al.dgn

05-03-2013

BAS-13AL

Sealed and Signed by:
Julius F.J. Volgyi Jr.
Lic. No. 010487
On the date of
May 3, 2013

A copy of the original sealed and signed standard drawing is on file in the Central Office.

VDOT S&B DIVISION
RICHMOND, VA
STRUCTURAL ENGINEER

No.	Description	Date

Revisions

Scale as noted

© 2013, Commonwealth of Virginia

COMMONWEALTH OF VIRGINIA
DEPARTMENT OF TRANSPORTATION

STRUCTURE AND BRIDGE DIVISION

APPROACH SLABS

Designed: S&B DIV
Drawn: S&B DIV
Checked: S&B DIV

Date

Plan No. BAS-13AL

Sheet No.

APPROACH SLAB

SKEW OVER 20° TO 35°, SKEW LEFT;
APPROACH ROADWAY ASPHALT CONCRETE

NOTES TO DESIGNER:

Standard to be used when approach roadway is to be constructed of asphalt concrete.

Standard is for: Skew 20° to 35°, skew left

ADD THE FOLLOWING NOTES, DIMENSIONS, DETAILS, ETC. TO STANDARD:

PLAN:

Enter skew angle, width dimension and number of spaces for AS bars (top and bottom). Check details of corner(s) where approach slab rests on back of abutment backwall. Modify details as needed when using integral abutments, elephant ear wing walls, etc.

REINFORCING STEEL SCHEDULE:

Enter number of bars and length of AS0505 bar.

ESTIMATED QUANTITIES:

Indicate type of asphalt concrete overlay (in heading).

Enter concrete, reinforcing steel and asphalt concrete quantities for Abutments A and B and Totals.

STATE	FEDERAL AID ROUTE	FEDERAL AID PROJECT	STATE ROUTE	STATE PROJECT	SHEET NO.
VA.	—				

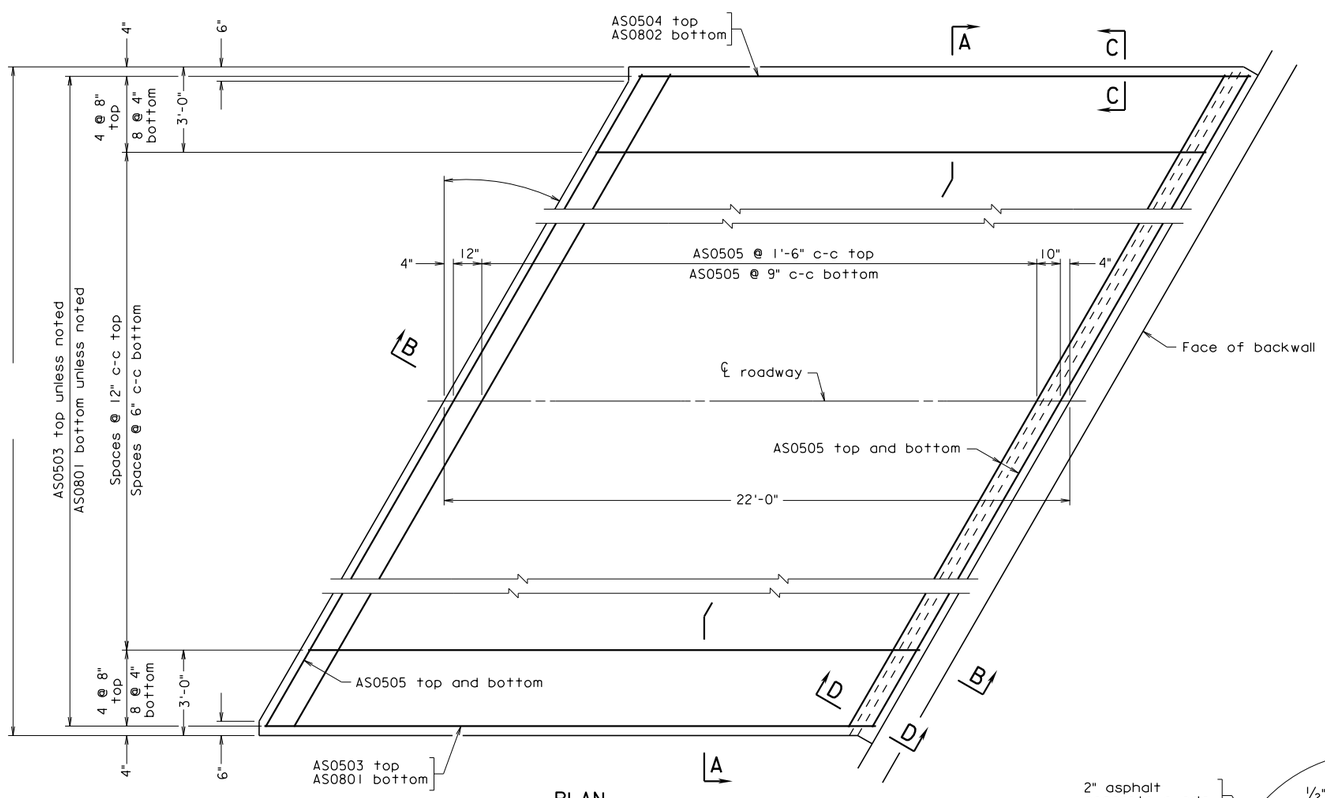

PLAN
Scale: 3/8" =1'-0"

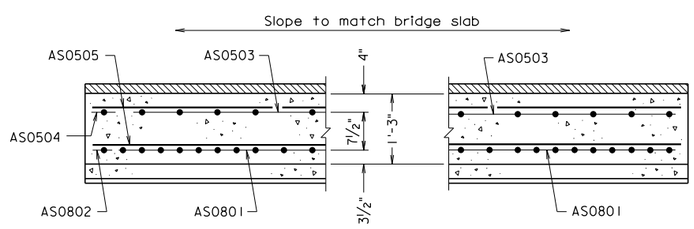

SECTION A-A
Scale: 3/4" = 1'-0"

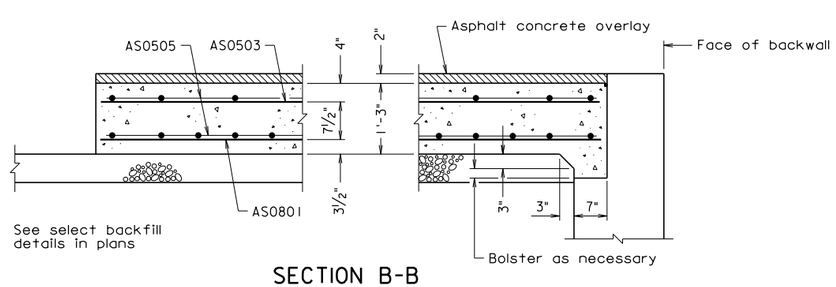

SECTION B-B
Scale: 3/4" = 1'-0"

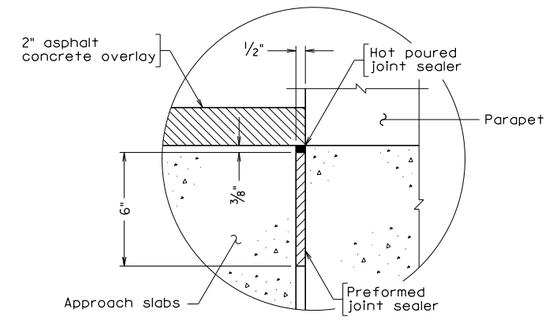

SECTION C-C
Scale: 3" = 1'-0"

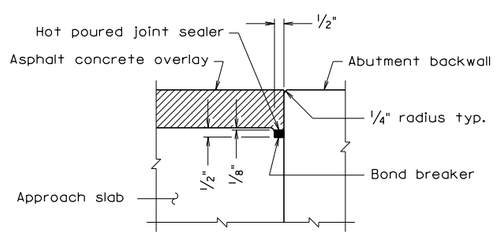

SECTION D-D
Scale: 3" = 1'-0"

Notes:

All joints that are to be sealed shall be free of cracked and spalled areas and their faces shall be free of all foreign matter, curing compound, oils, greases and dirt. All faces must be sandblasted or brushed with a mechanical rotary wire brush. Just prior to sealing, the joint shall be blown out with oil-free compressed air.

Deformed reinforcing bars shall conform to ASTM A615, Grade 60. All reinforcing bar dimensions except for bending diagram are to centers of bars.

Prime aggregate base material with 0.35 gal. per sq. yd. Liquid Asphalt Material Type RC-70, RC-250 or MC-250 if aggregate base is exposed for more than two weeks. Cost included in select backfill.

No grooving is required. The finish shall include a multi-ply damp fabric dragged over the approach slab surface to provide a gritty texture.

REINFORCING STEEL SCHEDULE

Mark	No.	Size	Pin ø	Length	Location
AS0801	·	#8	—	21'-6"	Bottom longitudinal
AS0802	·	#8	—	21'-3"	Bottom longitudinal
AS0503	·	#5	—	21'-6"	Top longitudinal
AS0504	·	#5	—	21'-3"	Top longitudinal
AS0505	·	#5	—	·	Top and bottom transverse
·	·	·	·	·	·
·	·	·	·	·	·
·	·	·	·	·	·

ESTIMATED QUANTITIES

	Concrete Class A4 Bridge Approach Slab ⊗ CY	Reinforcing Steel Bridge Approach Slab ⊗ LB	Asphalt Concrete Type Ton
Abutment A	·	·	·
Abutment B	·	·	·
Totals	·	·	·

⊗ Denotes items to be paid for on basis of plan quantities in accordance with current Road and Bridge Specifications.

bas13ar.dgn

05-03-2013

BAS-13AR

Sealed and Signed by:
Julius F.J. Volgyi Jr.
Lic. No. 010487
On the date of
May 3, 2013

A copy of the original sealed and signed standard drawing is on file in the Central Office.

VDOT S&B DIVISION
RICHMOND, VA
STRUCTURAL ENGINEER

No.	Description	Date
	Revisions	

COMMONWEALTH OF VIRGINIA
DEPARTMENT OF TRANSPORTATION

STRUCTURE AND BRIDGE DIVISION

APPROACH SLABS

Designed: S&B DIV
Drawn: S&B DIV
Checked: S&B DIV

Date | Plan No. BAS-13AR | Sheet No.

Scale as noted

©2013, Commonwealth of Virginia

APPROACH SLAB

SKEW OVER 20° TO 35°, SKEW RIGHT;
APPROACH ROADWAY ASPHALT CONCRETE

NOTES TO DESIGNER:

Standard to be used when approach roadway is to be constructed of asphalt concrete.

Standard is for: Skew 20° to 35°, skew right

ADD THE FOLLOWING NOTES, DIMENSIONS, DETAILS, ETC. TO STANDARD:

PLAN:

Enter skew angle, width dimension and number of spaces for AS bars (top and bottom). Check details of corner(s) where approach slab rests on back of abutment backwall. Modify details as needed when using integral abutments, elephant ear wing walls, etc.

REINFORCING STEEL SCHEDULE:

Enter number of bars and length of AS0505 bar.

ESTIMATED QUANTITIES:

Indicate type of asphalt concrete overlay (in heading).

Enter concrete, reinforcing steel and asphalt concrete quantities for Abutments A and B and Totals.

STATE	FEDERAL AID ROUTE	FEDERAL AID PROJECT	STATE ROUTE	STATE PROJECT	SHEET NO.
VA.	—				

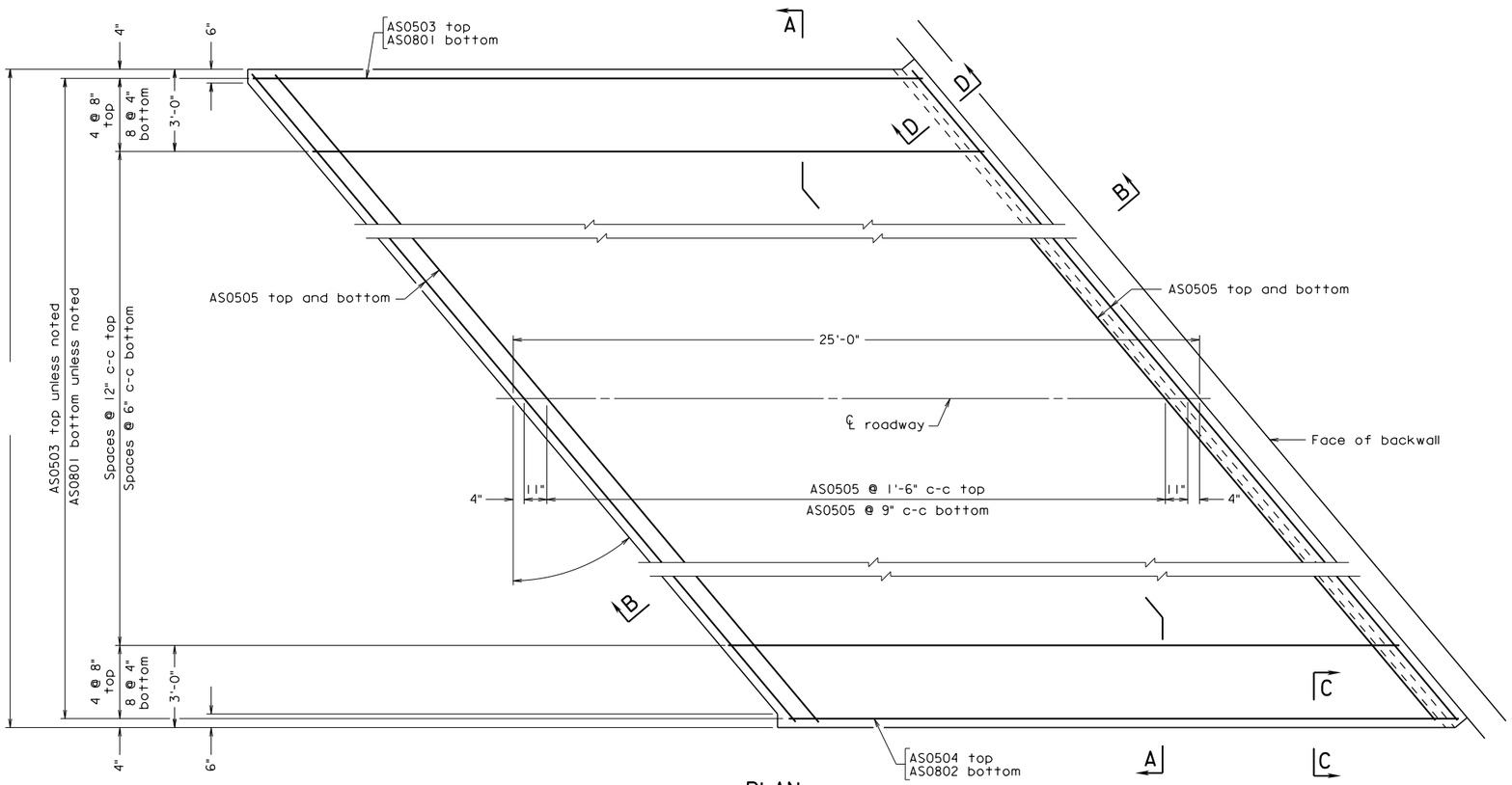

PLAN
Scale: 3/8" = 1'-0"

Notes:

All joints that are to be sealed shall be free of cracked and spalled areas and their faces shall be free of all foreign matter, curing compound, oils, greases and dirt. All faces must be sandblasted or brushed with a mechanical rotary wire brush. Just prior to sealing, the joint shall be blown out with oil-free compressed air.

Deformed reinforcing bars shall conform to ASTM A615, Grade 60. All reinforcing bar dimensions except for bending diagram are to centers of bars.

Prime aggregate base material with 0.35 gal. per sq. yd. Liquid Asphalt Material Type RC-70, RC-250 or MC-250 if aggregate base is exposed for more than two weeks. Cost included in select backfill.

No grooving is required. The finish shall include a multi-ply damp fabric dragged over the approach slab surface to provide a gritty texture.

REINFORCING STEEL SCHEDULE

Mark	No.	Size	Pin ø	Length	Location
AS0801	·	#8	—	24'-5"	Bottom longitudinal
AS0802	·	#8	—	24'-2"	Bottom longitudinal
AS0503	·	#5	—	24'-5"	Top longitudinal
AS0504	·	#5	—	24'-2"	Top longitudinal
AS0505	·	#5	—	·	Top and bottom transverse
·	·	·	·	·	·
·	·	·	·	·	·
·	·	·	·	·	·

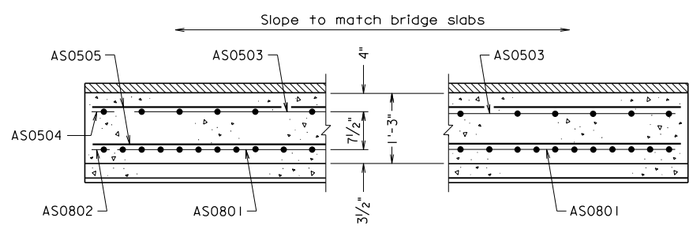

SECTION A-A
Scale: 3/4" = 1'-0"

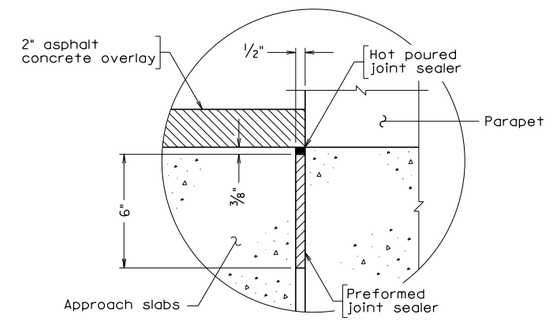

SECTION C-C
Scale: 3" = 1'-0"

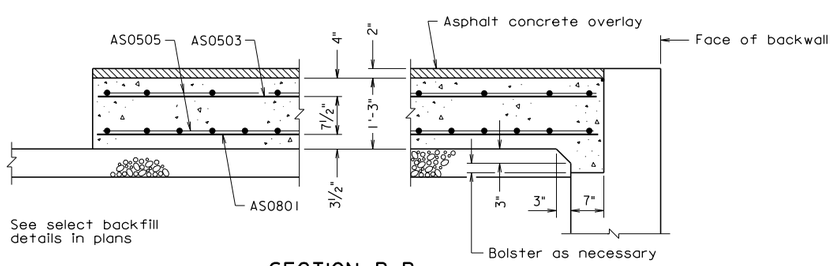

SECTION B-B
Scale: 3/4" = 1'-0"

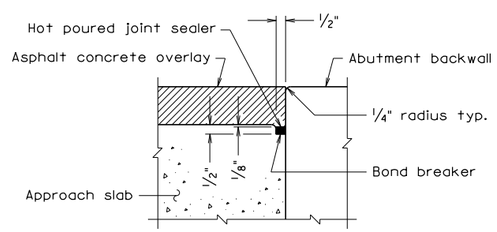

SECTION D-D
Scale: 3" = 1'-0"

ESTIMATED QUANTITIES

	Concrete Class A4 Bridge Approach Slab ⊗ CY	Reinforcing Steel Bridge Approach Slab ⊗ LB	Asphalt Concrete Type Ton
Abutment A	·	·	·
Abutment B	·	·	·
Totals	·	·	·

⊗ Denotes items to be paid for on basis of plan quantities in accordance with current Road and Bridge Specifications.

bas14al.dgn

BAS-14AL 05-03-2013

Sealed and Signed by:
Julius F.J. Volgyi Jr.
Lic. No. 010487
On the date of
May 3, 2013

A copy of the original sealed and signed standard drawing is on file in the Central Office.

VDOT S&B DIVISION
RICHMOND, VA
STRUCTURAL ENGINEER

No.	Description	Date
	Revisions	

Scale as noted

©2013, Commonwealth of Virginia

COMMONWEALTH OF VIRGINIA
DEPARTMENT OF TRANSPORTATION

STRUCTURE AND BRIDGE DIVISION

APPROACH SLABS

Designed: S&B DIV
Drawn: S&B DIV
Checked: S&B DIV

Date	Plan No.	Sheet No.
	BAS-14AL	

APPROACH SLAB

SKEW OVER 35° TO 45°, SKEW LEFT;
APPROACH ROADWAY ASPHALT CONCRETE

NOTES TO DESIGNER:

Standard to be used when approach roadway is to be constructed of asphalt concrete.

Standard is for: Skew over 35° to 45°, skew left

ADD THE FOLLOWING NOTES, DIMENSIONS, DETAILS, ETC. TO STANDARD:

PLAN:

Enter skew angle, width dimension and number of spaces for AS bars (top and bottom). Check details of corner(s) where approach slab rests on back of abutment backwall. Modify details as needed when using elephant ear wing walls.

REINFORCING STEEL SCHEDULE:

Enter number of bars and length of AS0505 bar.

ESTIMATED QUANTITIES:

Indicate type of asphalt concrete overlay (in heading).

Enter concrete, reinforcing steel and asphalt concrete quantities for Abutments A and B and Totals.

STATE	FEDERAL AID ROUTE	FEDERAL AID PROJECT	STATE ROUTE	STATE PROJECT	SHEET NO.
VA.	—				

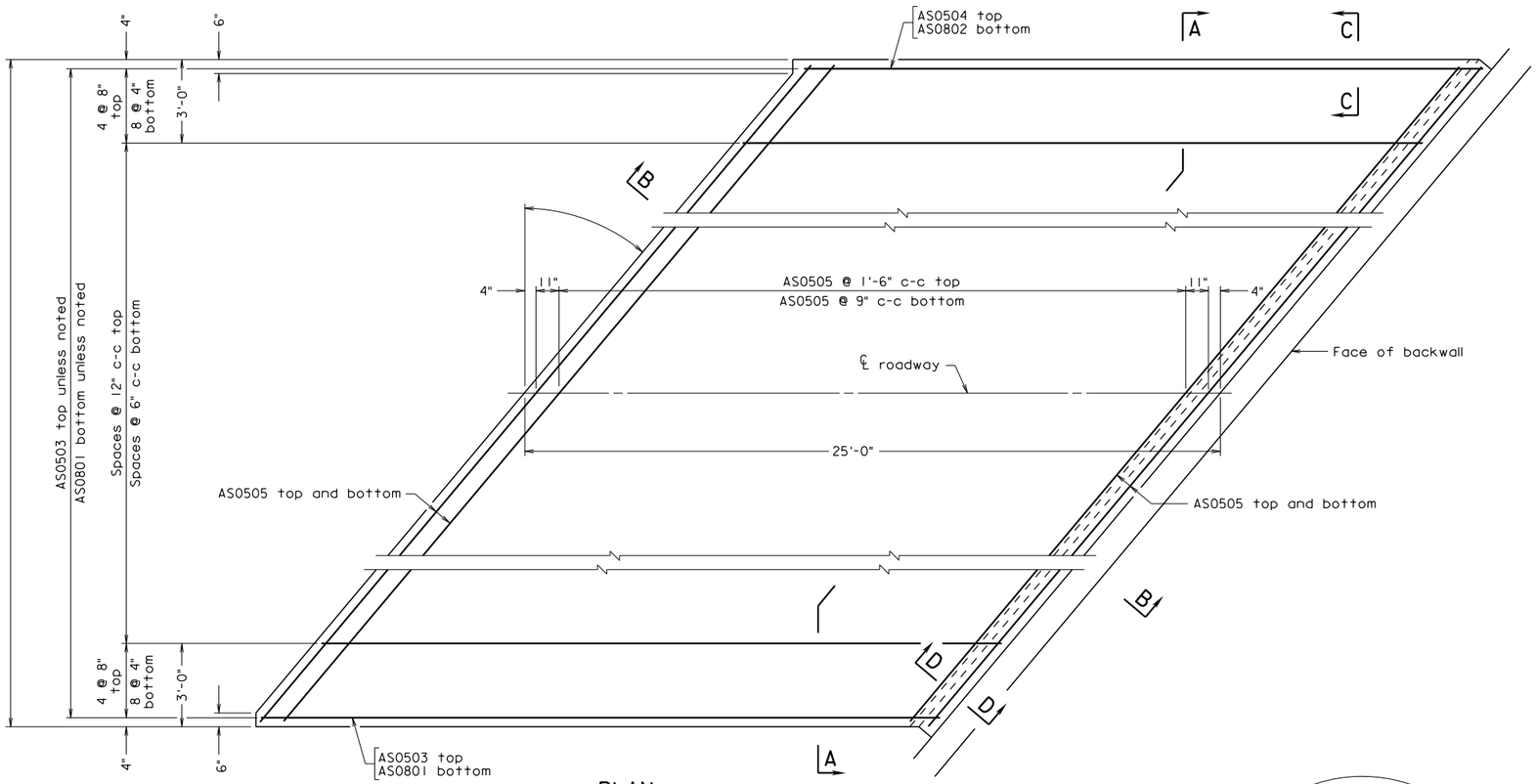

PLAN
Scale: 3/8" = 1'-0"

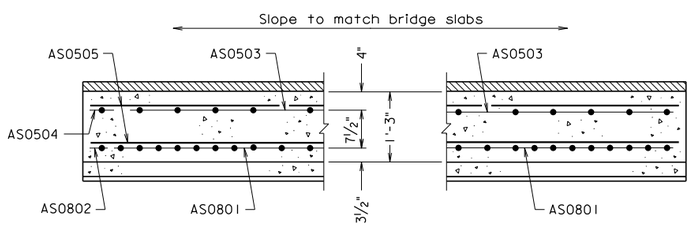

SECTION A-A
Scale: 3/4" = 1'-0"

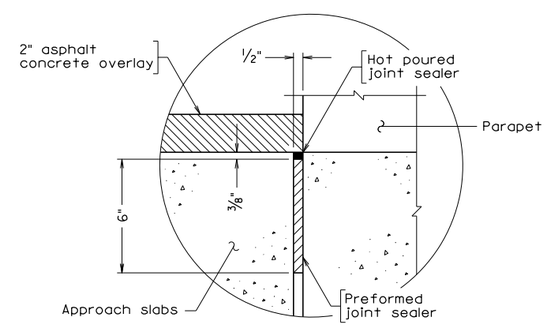

SECTION C-C
Scale: 3" = 1'-0"

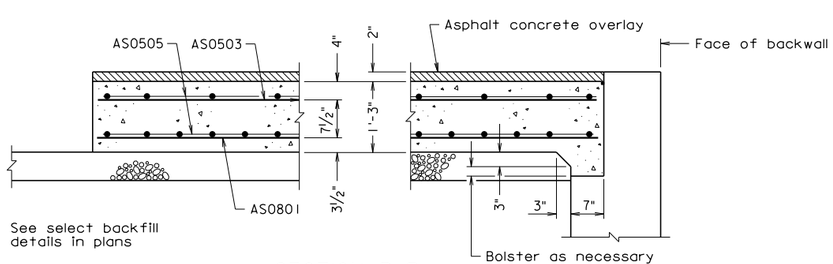

SECTION B-B
Scale: 3/4" = 1'-0"

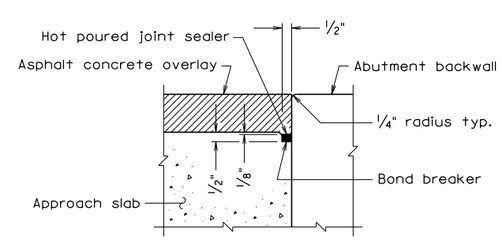

SECTION D-D
Scale: 3" = 1'-0"

Notes:

All joints that are to be sealed shall be free of cracked and spalled areas and their faces shall be free of all foreign matter, curing compound, oils, greases and dirt. All faces must be sandblasted or brushed with a mechanical rotary wire brush. Just prior to sealing, the joint shall be blown out with oil-free compressed air.

Deformed reinforcing bars shall conform to ASTM A615, Grade 60. All reinforcing bar dimensions except for bending diagram are to centers of bars.

Prime aggregate base material with 0.35 gal. per sq. yd. Liquid Asphalt Material Type RC-70, RC-250 or MC-250 if aggregate base is exposed for more than two weeks. Cost included in select backfill.

No grooving is required. The finish shall include a multi-ply damp fabric dragged over the approach slab surface to provide a gritty texture.

REINFORCING STEEL SCHEDULE

Mark	No.	Size	Pin ø	Length	Location
AS0801	·	#8	—	24'-5"	Bottom longitudinal
AS0802	·	#8	—	24'-2"	Bottom longitudinal
AS0503	·	#5	—	24'-5"	Top longitudinal
AS0504	·	#5	—	24'-2"	Top longitudinal
AS0505	·	#5	—	·	Top and bottom transverse
·	·	·	·	·	·
·	·	·	·	·	·
·	·	·	·	·	·

ESTIMATED QUANTITIES

	Concrete Class A4 Bridge Approach Slab ⊗ CY	Reinforcing Steel Bridge Approach Slab ⊗ LB	Asphalt Concrete Type Ton
Abutment A	·	·	·
Abutment B	·	·	·
Totals	·	·	·

⊗ Denotes items to be paid for on basis of plan quantities in accordance with current Road and Bridge Specifications.

Scale as noted

© 2013, Commonwealth of Virginia

No.	Description	Date

Revisions

COMMONWEALTH OF VIRGINIA
DEPARTMENT OF TRANSPORTATION

STRUCTURE AND BRIDGE DIVISION

APPROACH SLABS

Designed: S&B DIV
Drawn: S&B DIV
Checked: S&B DIV

Date

Plan No. BAS-14AR

Sheet No.

Sealed and Signed by:
Julius F.J. Volgyi Jr.
Lic. No. 010487
On the date of
May 3, 2013

A copy of the original sealed and signed standard drawing is on file in the Central Office.

VDOT S&B DIVISION
RICHMOND, VA
STRUCTURAL ENGINEER

BAS-14AR 05-03-2013

bas14ar.dgn

APPROACH SLAB

SKEW OVER 35° TO 45°, SKEW RIGHT;
APPROACH ROADWAY ASPHALT CONCRETE

NOTES TO DESIGNER:

Standard to be used when approach roadway is to be constructed of asphalt concrete.

Standard is for: Skew over 35° to 45°, skew right

ADD THE FOLLOWING NOTES, DIMENSIONS, DETAILS, ETC. TO STANDARD:

PLAN:

Enter skew angle, width dimension and number of spaces for AS bars (top and bottom). Check details of corner(s) where approach slab rests on back of abutment backwall. Modify details as needed when using elephant ear wing walls.

REINFORCING STEEL SCHEDULE:

Enter number of bars and length of AS0505 bar.

ESTIMATED QUANTITIES:

Indicate type of asphalt concrete overlay (in heading).

Enter concrete, reinforcing steel and asphalt concrete quantities for Abutments A and B and Totals.

STATE	FEDERAL AID ROUTE	FEDERAL AID PROJECT	STATE ROUTE	STATE PROJECT	SHEET NO.
VA.	—				

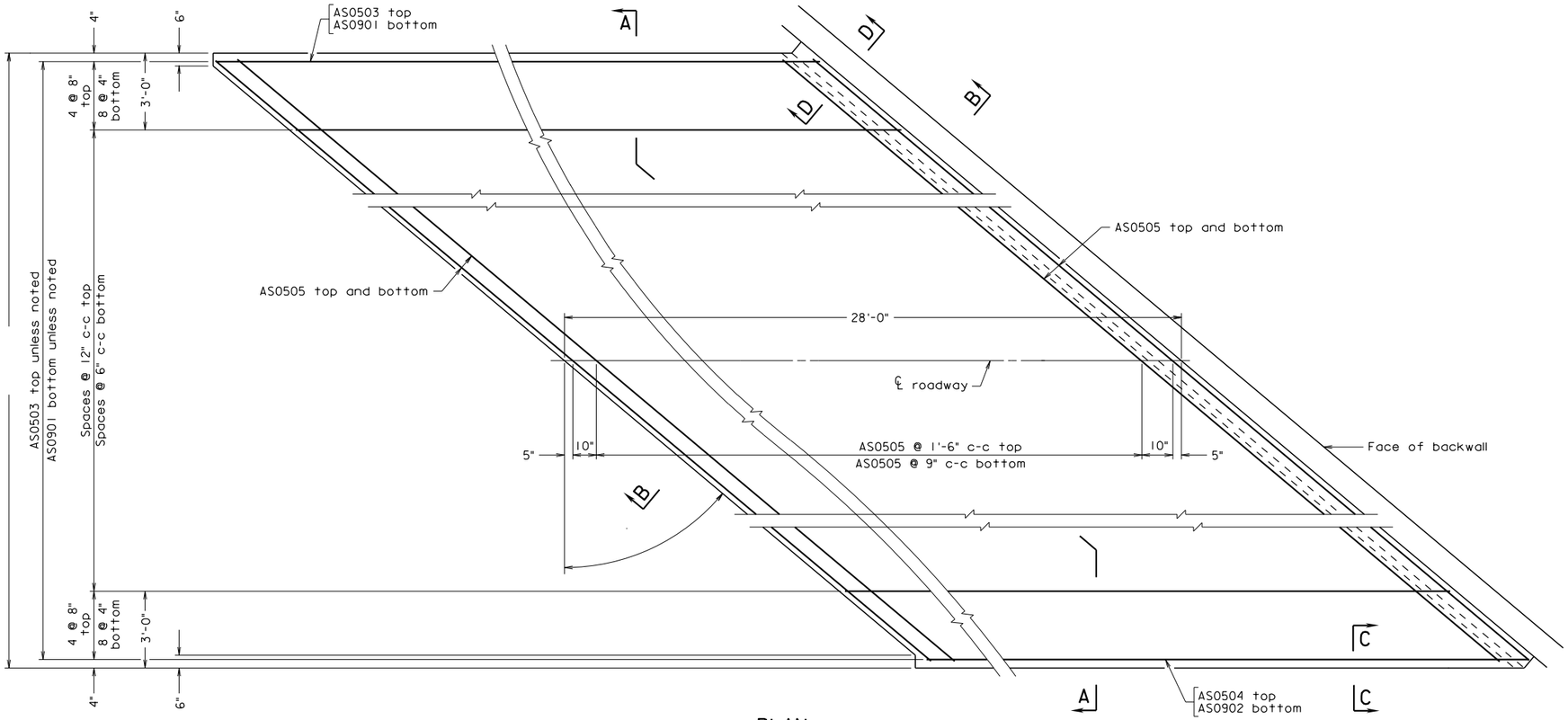

PLAN
Scale: 3/8" = 1'-0"

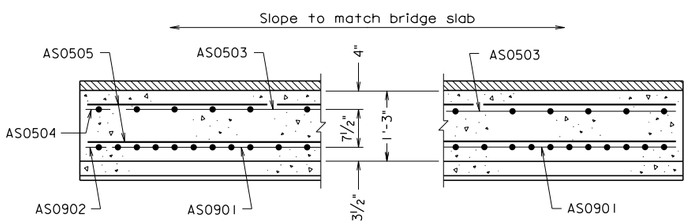

SECTION A-A
Scale: 3/4" = 1'-0"

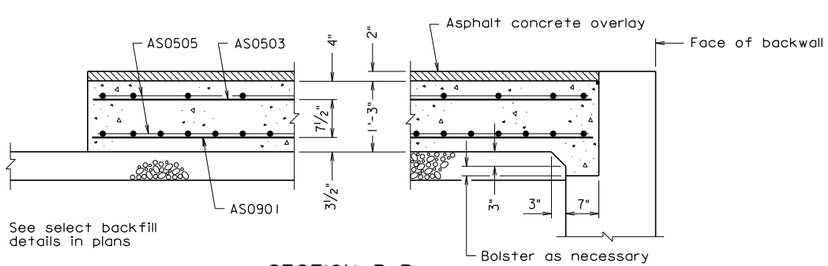

SECTION B-B
Scale: 3/4" = 1'-0"

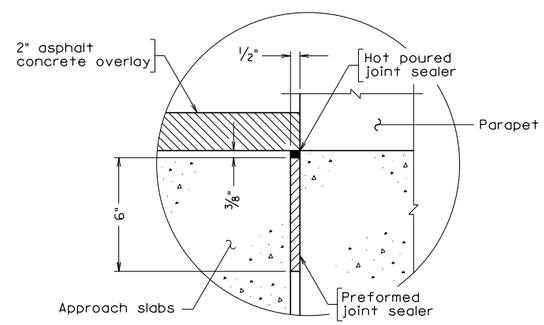

SECTION C-C
Scale: 3" = 1'-0"

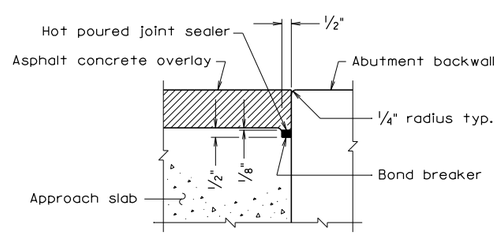

SECTION D-D
Scale: 3" = 1'-0"

Notes:

All joints that are to be sealed shall be free of cracked and spalled areas and their faces shall be free of all foreign matter, curing compound, oils, greases and dirt. All faces must be sandblasted or brushed with a mechanical rotary wire brush. Just prior to sealing, the joint shall be blown out with oil-free compressed air.

Deformed reinforcing bars shall conform to ASTM A615, Grade 60. All reinforcing bar dimensions except for bending diagram are to centers of bars.

Prime aggregate base material with 0.35 gal. per sq. yd. Liquid Asphalt Material Type RC-70, RC-250 or MC-250 if aggregate base is exposed for more than two weeks. Cost included in select backfill.

No grooving is required. The finish shall include a multi-ply damp fabric dragged over the approach slab surface to provide a gritty texture.

REINFORCING STEEL SCHEDULE

Mark	No.	Size	Pin ø	Length	Location
AS0901	·	#9	—	27'-5"	Bottom longitudinal
AS0902	·	#9	—	27'-2"	Bottom longitudinal
AS0503	·	#5	—	27'-5"	Top longitudinal
AS0504	·	#5	—	27'-2"	Top longitudinal
AS0505	·	#5	—	·	Top and bottom transverse
·	·	·	·	·	·
·	·	·	·	·	·
·	·	·	·	·	·

ESTIMATED QUANTITIES

	Concrete Class A4 Bridge Approach Slab ⊗ CY	Reinforcing Steel Bridge Approach Slab ⊗ LB	Asphalt Concrete Type Ton
Abutment A	·	·	·
Abutment B	·	·	·
Totals	·	·	·

⊗ Denotes items to be paid for on basis of plan quantities in accordance with current Road and Bridge Specifications.

bas15al.dgn

05-03-2013

BAS-15AL

Sealed and Signed by:
Julius F.J. Volgyi Jr.
Lic. No. 010487
On the date of
May 3, 2013

A copy of the original sealed and signed standard drawing is on file in the Central Office.

VDOT S&B DIVISION
RICHMOND, VA
STRUCTURAL ENGINEER

No.	Description	Date

Revisions

Scale as noted

© 2013, Commonwealth of Virginia

COMMONWEALTH OF VIRGINIA
DEPARTMENT OF TRANSPORTATION

STRUCTURE AND BRIDGE DIVISION

APPROACH SLABS

Designed: S&B DIV
Drawn: S&B DIV
Checked: S&B DIV

Date

Plan No. BAS-15AL

Sheet No.

APPROACH SLAB

SKEW OVER 45° TO 50°, SKEW LEFT;
APPROACH ROADWAY ASPHALT CONCRETE

NOTES TO DESIGNER:

Standard to be used when approach roadway is to be constructed of asphalt concrete.

Standard is for: Skew over 45° to 50°, skew left

ADD THE FOLLOWING NOTES, DIMENSIONS, DETAILS, ETC. TO STANDARD:

PLAN:

Enter skew angle, width dimension and number of spaces for AS bars (top and bottom). Check details of corner(s) where approach slab rests on back of abutment backwall. Modify details as needed when using elephant ear wing walls.

REINFORCING STEEL SCHEDULE:

Enter number of bars and length of AS0505 bar.

ESTIMATED QUANTITIES:

Indicate type of asphalt concrete overlay (in heading).

Enter concrete, reinforcing steel and asphalt concrete quantities for Abutments A and B and Totals.

STATE	FEDERAL AID ROUTE	FEDERAL AID PROJECT	STATE ROUTE	STATE PROJECT	SHEET NO.
VA.	—				

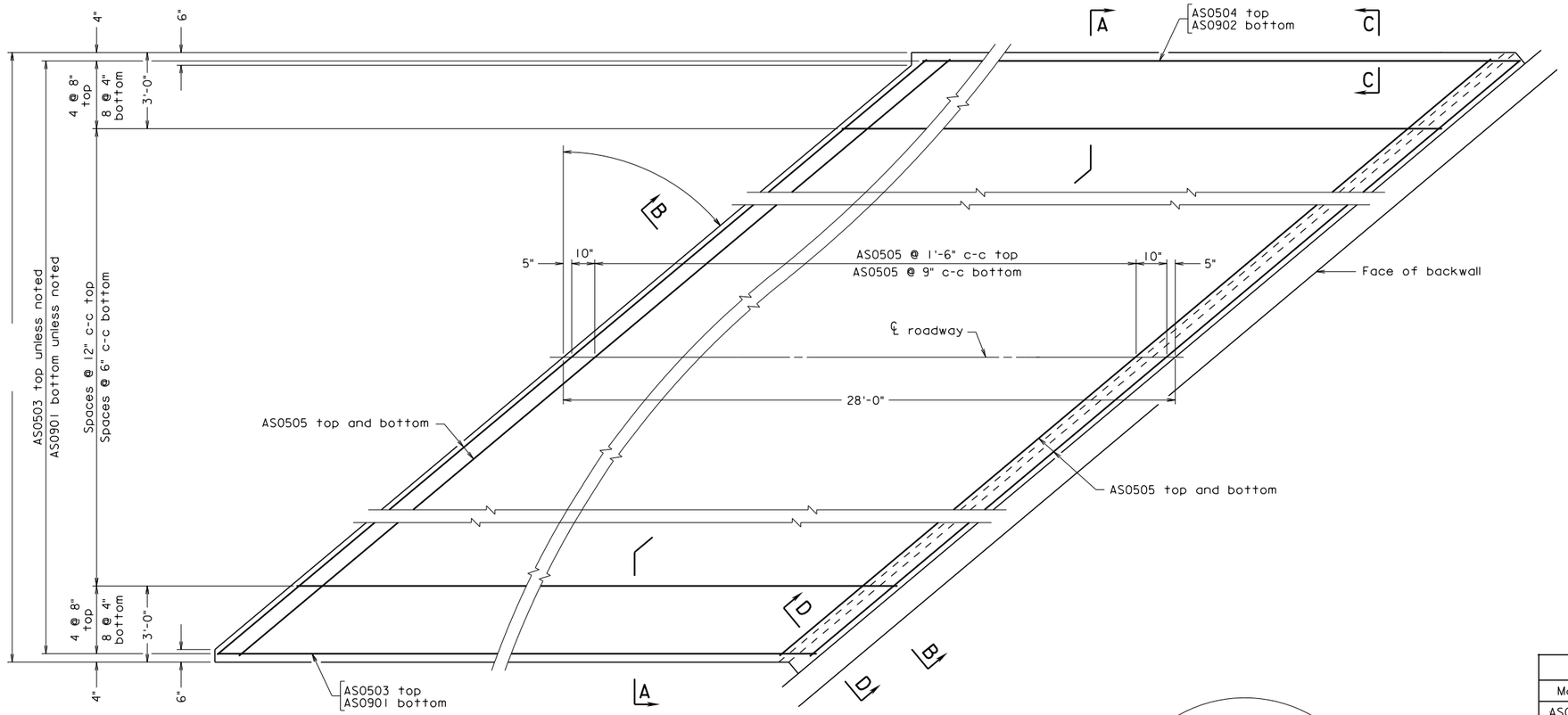

PLAN
Scale: 3/8" = 1'-0"

Notes:

All joints that are to be sealed shall be free of cracked and spalled areas and their faces shall be free of all foreign matter, curing compound, oils, greases and dirt. All faces must be sandblasted or brushed with a mechanical rotary wire brush. Just prior to sealing, the joint shall be blown out with oil-free compressed air.

Deformed reinforcing bars shall conform to ASTM A615, Grade 60. All reinforcing bar dimensions except for bending diagram are to centers of bars.

Prime aggregate base material with 0.35 gal. per sq. yd. Liquid Asphalt Material Type RC-70, RC-250 or MC-250 if aggregate base is exposed for more than two weeks. Cost included in select backfill.

No grooving is required. The finish shall include a multi-ply damp fabric dragged over the approach slab surface to provide a gritty texture.

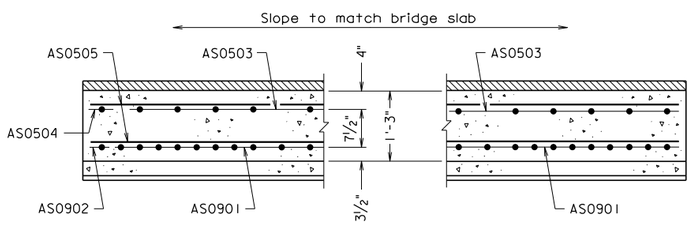

SECTION A-A
Scale: 3/4" = 1'-0"

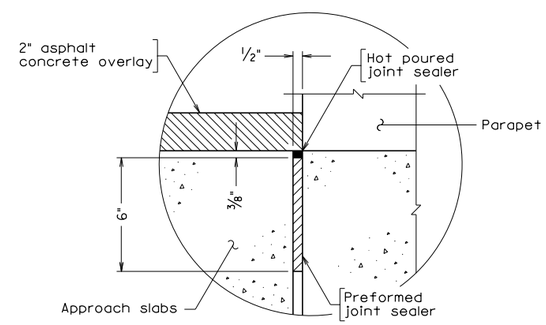

SECTION C-C
Scale: 3" = 1'-0"

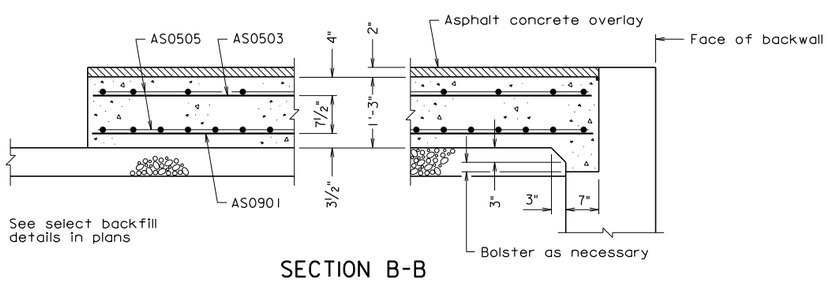

SECTION B-B
Scale: 3/4" = 1'-0"

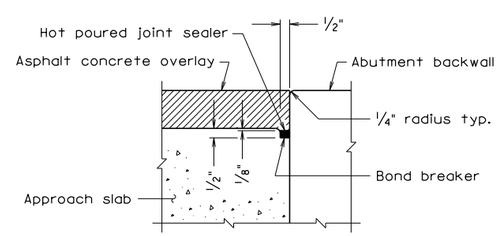

SECTION D-D
Scale: 3" = 1'-0"

REINFORCING STEEL SCHEDULE

Mark	No.	Size	Pin ø	Length	Location
AS0901	·	#9	—	27'-5"	Bottom longitudinal
AS0902	·	#9	—	27'-2"	Bottom longitudinal
AS0503	·	#5	—	27'-5"	Top longitudinal
AS0504	·	#5	—	27'-2"	Top longitudinal
AS0505	·	#5	—	·	Top and bottom transverse
·	·	·	·	·	·
·	·	·	·	·	·
·	·	·	·	·	·

ESTIMATED QUANTITIES

	Concrete Class A4 Bridge Approach Slab ⊗ CY	Reinforcing Steel Bridge Approach Slab ⊗ LB	Asphalt Concrete Type Ton
Abutment A	·	·	·
Abutment B	·	·	·
Totals	·	·	·

⊗ Denotes items to be paid for on basis of plan quantities in accordance with current Road and Bridge Specifications.

bas15ar.dgn

BAS-15AR 05-03-2013

Sealed and Signed by:
Julius F.J. Volgyi Jr.
Lic. No. 010487
On the date of
May 3, 2013

A copy of the original sealed and signed standard drawing is on file in the Central Office.

VDOT S&B DIVISION
RICHMOND, VA
STRUCTURAL ENGINEER

No.	Description	Date

Revisions

Scale as noted

©2013, Commonwealth of Virginia

COMMONWEALTH OF VIRGINIA
DEPARTMENT OF TRANSPORTATION

STRUCTURE AND BRIDGE DIVISION

APPROACH SLABS

Designed: S&B DIV
Drawn: S&B DIV
Checked: S&B DIV

Date	Plan No.	Sheet No.
	BAS-15AR	

APPROACH SLAB

SKEW OVER 45° TO 50°, SKEW RIGHT;
APPROACH ROADWAY ASPHALT CONCRETE

NOTES TO DESIGNER:

Standard to be used when approach roadway is to be constructed of asphalt concrete.

Standard is for: Skew over 45° to 50°, skew right

ADD THE FOLLOWING NOTES, DIMENSIONS, DETAILS, ETC. TO STANDARD:

PLAN:

Enter skew angle, width dimension and number of spaces for AS bars (top and bottom). Check details of corner(s) where approach slab rests on back of abutment backwall. Modify details as needed when using elephant ear wing walls.

REINFORCING STEEL SCHEDULE:

Enter number of bars and length of AS0505 bar.

ESTIMATED QUANTITIES:

Indicate type of asphalt concrete overlay (in heading).

Enter concrete, reinforcing steel and asphalt concrete quantities for Abutments A and B and Totals.

STATE	FEDERAL AID ROUTE	FEDERAL AID PROJECT	STATE ROUTE	STATE PROJECT	SHEET NO.
VA.	—				

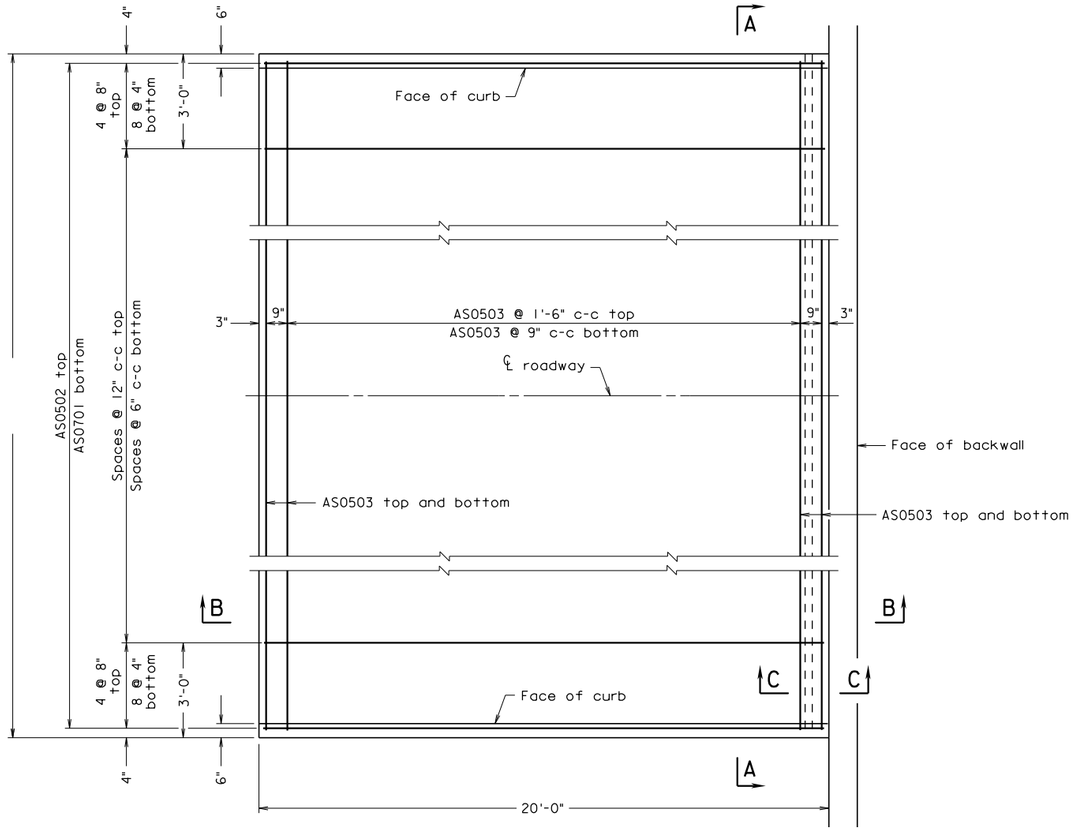

PLAN
Scale: 3/8" = 1'-0"

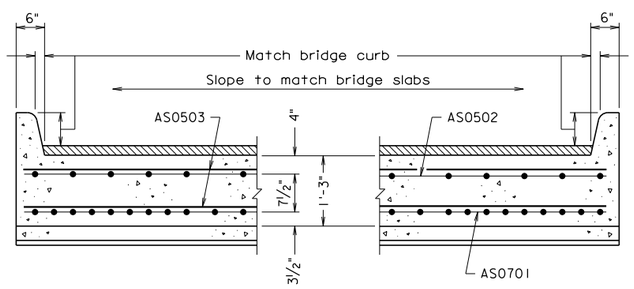

SECTION A-A
Scale: 3/4" = 1'-0"

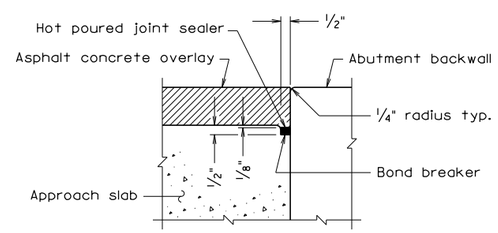

SECTION C-C
Scale: 3" = 1'-0"

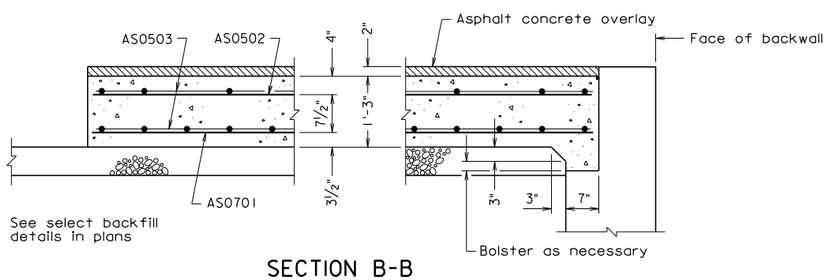

SECTION B-B
Scale: 3/4" = 1'-0"

Notes:

All joints that are to be sealed shall be free of cracked and spalled areas and their faces shall be free of all foreign matter, curing compound, oils, greases and dirt. All faces must be sandblasted or brushed with a mechanical rotary wire brush. Just prior to sealing, the joint shall be blown out with oil-free compressed air.

Deformed reinforcing bars shall conform to ASTM A615, Grade 60. All reinforcing bar dimensions except for bending diagram are to centers of bars.

Prime aggregate base material with 0.35 gal. per sq. yd. Liquid Asphalt Material Type RC-70, RC-250 or MC-250 if aggregate base is exposed for more than two weeks. Cost included in select backfill.

No grooving is required. The finish shall include a multi-ply damp fabric dragged over the approach slab surface to provide a gritty texture.

REINFORCING STEEL SCHEDULE

Mark	No.	Size	Pin ø	Length	Location
AS0701	·	#7	—	19'-8"	Bottom longitudinal
AS0502	·	#5	—	19'-8"	Top longitudinal
AS0503	·	#5	—	·	Top and bottom transverse
·	·	·	·	·	·
·	·	·	·	·	·
·	·	·	·	·	·
·	·	·	·	·	·
·	·	·	·	·	·

ESTIMATED QUANTITIES

	Concrete Class A4 Bridge Approach Slab ⊗ CY	Reinforcing Steel Bridge Approach Slab ⊗ LB	Asphalt Concrete Type Ton
Abutment A	·	·	·
Abutment B	·	·	·
Totals	·	·	·

⊗ Denotes items to be paid for on basis of plan quantities in accordance with current Road and Bridge Specifications.

Scale as noted

©2013, Commonwealth of Virginia

No.	Description	Date

Revisions

COMMONWEALTH OF VIRGINIA
DEPARTMENT OF TRANSPORTATION

STRUCTURE AND BRIDGE DIVISION

APPROACH SLABS

Designed: S&B DIV
Drawn: S&B DIV
Checked: S&B DIV

Date

Plan No. BAS-16A

Sheet No.

bas16a.dgn

05-03-2013

BAS-16A

Sealed and Signed by:
Julius F.J. Volgyi Jr.
Lic. No. 010487
On the date of
May 3, 2013

A copy of the original sealed and signed standard drawing is on file in the Central Office.

VDOT S&B DIVISION
RICHMOND, VA
STRUCTURAL ENGINEER

APPROACH SLAB

STRAIGHT CROSSING
STRUCTURE WITH SIDEWALKS;
APPROACH ROADWAY ASPHALT CONCRETE

NOTES TO DESIGNER:

Standard to be used when approach roadway is to be constructed of asphalt concrete.

Standard is for: 0° Skew
Structure with sidewalks

ADD THE FOLLOWING NOTES, DIMENSIONS, DETAILS, ETC. TO STANDARD:

PLAN:

Enter skew angle, width dimension and number of spaces for AS bars (top and bottom). Modify details as needed when using integral abutments, elephant ear wing walls, etc. Modify when sidewalk is only on one side.

REINFORCING STEEL SCHEDULE:

Enter number of bars and length of AS0503 bar.

ESTIMATED QUANTITIES:

Indicate type of asphalt concrete overlay (in heading).

Enter concrete, reinforcing steel and asphalt concrete quantities for Abutments A and B and Totals.

STATE	FEDERAL AID ROUTE	FEDERAL AID PROJECT	STATE ROUTE	STATE PROJECT	SHEET NO.
VA.	—				

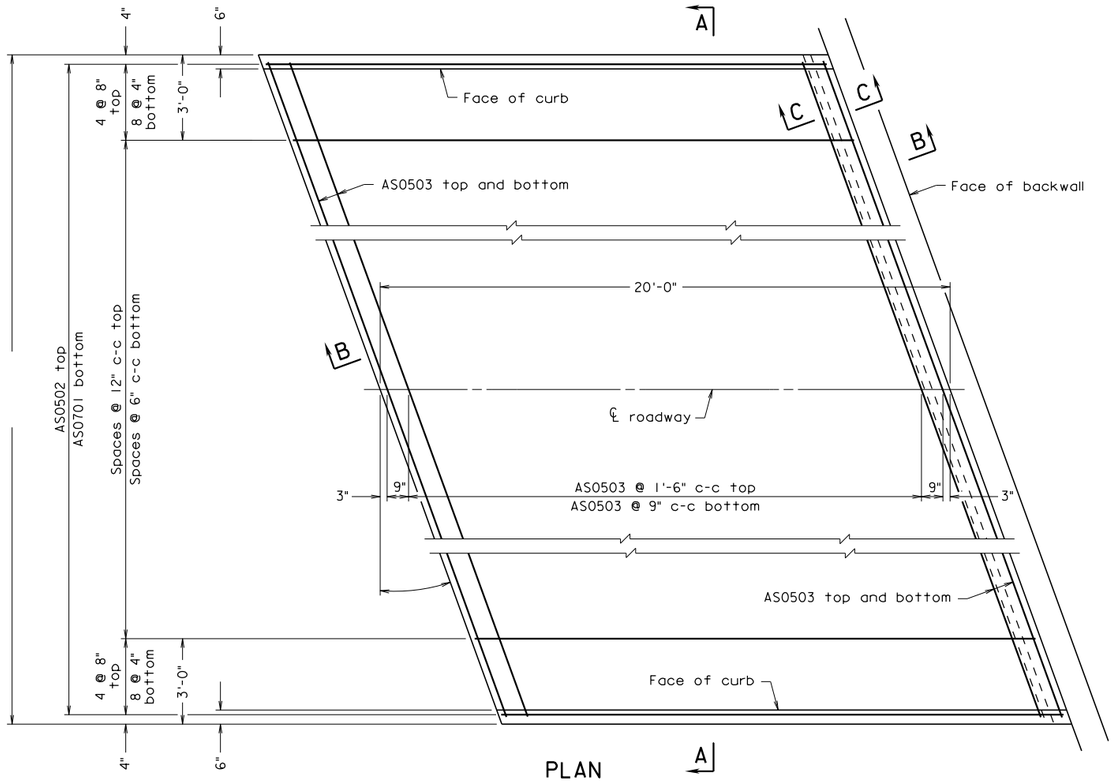

PLAN
Scale: 3/8" = 1'-0"

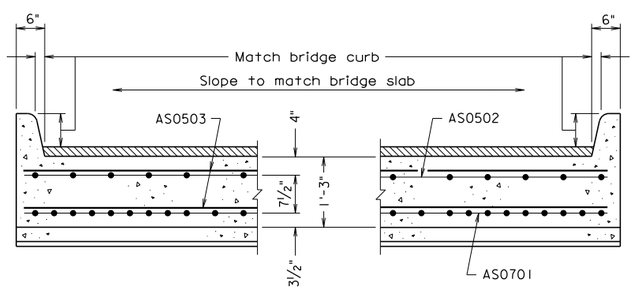

SECTION A-A
Scale: 3/4" = 1'-0"

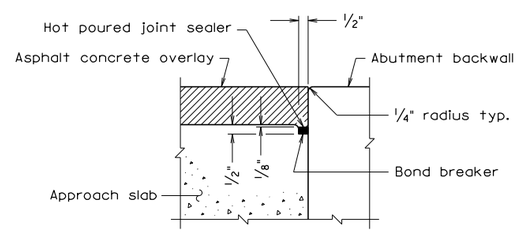

SECTION C-C
Scale: 3" = 1'-0"

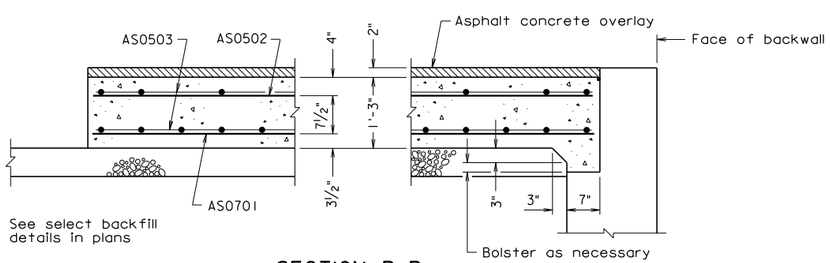

SECTION B-B
Scale: 3/4" = 1'-0"

Notes:

All joints that are to be sealed shall be free of cracked and spalled areas and their faces shall be free of all foreign matter, curing compound, oils, greases and dirt. All faces must be sandblasted or brushed with a mechanical rotary wire brush. Just prior to sealing, the joint shall be blown out with oil-free compressed air.

Deformed reinforcing bars shall conform to ASTM A615, Grade 60. All reinforcing bar dimensions except for bending diagram are to centers of bars.

Prime aggregate base material with 0.35 gal. per sq. yd. Liquid Asphalt Material Type RC-70, RC-250 or MC-250 if aggregate base is exposed for more than two weeks. Cost included in select backfill.

No grooving is required. The finish shall include a multi-ply damp fabric dragged over the approach slab surface to provide a gritty texture.

REINFORCING STEEL SCHEDULE

Mark	No.	Size	Pin ø	Length	Location
AS0701	·	#7	—	19'-8"	Bottom longitudinal
AS0502	·	#5	—	19'-8"	Top longitudinal
AS0503	·	#5	—	·	Top and bottom transverse
·	·	·	·	·	·
·	·	·	·	·	·
·	·	·	·	·	·
·	·	·	·	·	·
·	·	·	·	·	·

ESTIMATED QUANTITIES

	Concrete Class A4 Bridge Approach Slab ⊗ CY	Reinforcing Steel Bridge Approach Slab ⊗ LB	Asphalt Concrete Type Ton
Abutment A	·	·	·
Abutment B	·	·	·
Totals	·	·	·

⊗ Denotes items to be paid for on basis of plan quantities in accordance with current Road and Bridge Specifications.

bas17al.dgn

05-03-2013

BAS-17AL

Sealed and Signed by:
Julius F.J. Volgyi Jr.
Lic. No. 010487
On the date of
May 3, 2013

A copy of the original sealed and signed standard drawing is on file in the Central Office.

VDOT S&B DIVISION
RICHMOND, VA
STRUCTURAL ENGINEER

No.	Description	Date

Revisions

Scale as noted

© 2013, Commonwealth of Virginia

COMMONWEALTH OF VIRGINIA
DEPARTMENT OF TRANSPORTATION

STRUCTURE AND BRIDGE DIVISION

APPROACH SLABS

Designed: S&B DIV
Drawn: S&B DIV
Checked: S&B DIV

Date

Plan No. BAS-17AL

Sheet No.

APPROACH SLAB

SKEW 20° OR LESS, SKEW LEFT
STRUCTURE WITH SIDEWALKS;
APPROACH ROADWAY ASPHALT CONCRETE

NOTES TO DESIGNER:

Standard to be used when approach roadway is to be constructed of asphalt concrete.

Standard is for: Skew 20° or less, skew left
Structure with sidewalks

ADD THE FOLLOWING NOTES, DIMENSIONS, DETAILS, ETC. TO STANDARD:

PLAN:

Enter skew angle, width dimension and number of spaces for AS bars (top and bottom). Check details of corner(s) where approach slab rests on back of abutment backwall. Modify details as needed when using integral abutments, elephant ear wing walls, etc. Modify when sidewalk is only on one side.

REINFORCING STEEL SCHEDULE:

Enter number of bars and length of AS0503 bar.

ESTIMATED QUANTITIES:

Indicate type of asphalt concrete overlay (in heading).

Enter concrete, reinforcing steel and asphalt concrete quantities for Abutments A and B and Totals.

STATE	FEDERAL AID ROUTE	FEDERAL AID PROJECT	STATE ROUTE	STATE PROJECT	SHEET NO.
VA.	—				

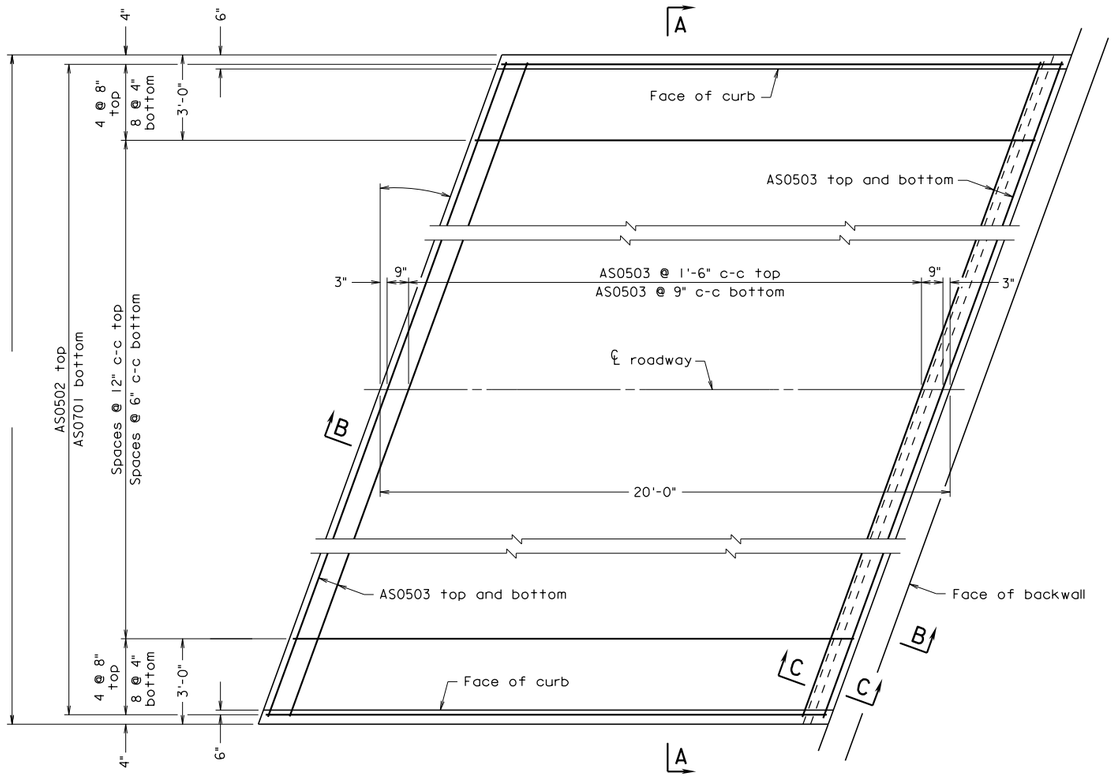

PLAN
Scale: 3/8" = 1'-0"

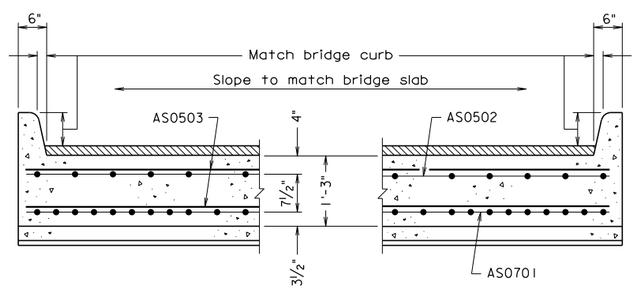

SECTION A-A
Scale: 3/4" = 1'-0"

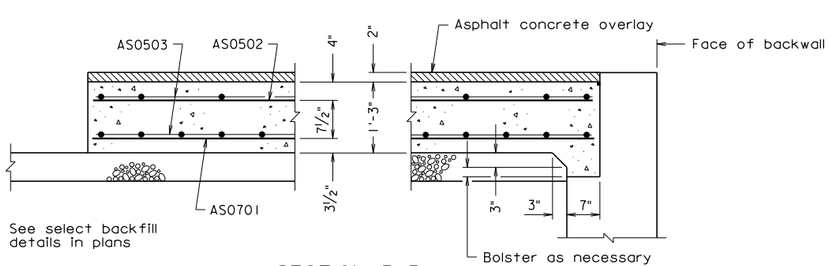

SECTION B-B
Scale: 3/4" = 1'-0"

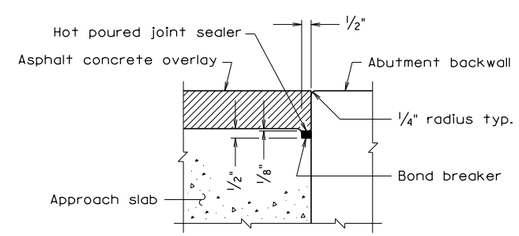

SECTION C-C
Scale: 3" = 1'-0"

Notes:

All joints that are to be sealed shall be free of cracked and spalled areas and their faces shall be free of all foreign matter, curing compound, oils, greases and dirt. All faces must be sandblasted or brushed with a mechanical rotary wire brush. Just prior to sealing, the joint shall be blown out with oil-free compressed air.

Deformed reinforcing bars shall conform to ASTM A615, Grade 60. All reinforcing bar dimensions except for bending diagram are to centers of bars.

Prime aggregate base material with 0.35 gal. per sq. yd. Liquid Asphalt Material Type RC-70, RC-250 or MC-250 if aggregate base is exposed for more than two weeks. Cost included in select backfill.

No grooving is required. The finish shall include a multi-ply damp fabric dragged over the approach slab surface to provide a gritty texture.

REINFORCING STEEL SCHEDULE

Mark	No.	Size	Pin ø	Length	Location
AS0701	·	#7	—	19'-8"	Bottom longitudinal
AS0502	·	#5	—	19'-8"	Top longitudinal
AS0503	·	#5	—	·	Top and bottom transverse
·	·	·	·	·	·
·	·	·	·	·	·
·	·	·	·	·	·
·	·	·	·	·	·
·	·	·	·	·	·

ESTIMATED QUANTITIES

	Concrete Class A4 Bridge Approach Slab ⊗ CY	Reinforcing Steel Bridge Approach Slab ⊗ LB	Asphalt Concrete Type Ton
Abutment A	·	·	·
Abutment B	·	·	·
Totals	·	·	·

⊗ Denotes items to be paid for on basis of plan quantities in accordance with current Road and Bridge Specifications.

bas17ar.dgn

05-03-2013

BAS-17AR

Sealed and Signed by:
Julius F.J. Volgyi Jr.
Lic. No. 010487
On the date of
May 3, 2013

A copy of the original sealed and signed standard drawing is on file in the Central Office.

VDOT S&B DIVISION
RICHMOND, VA
STRUCTURAL ENGINEER

No.	Description	Date
	Revisions	

COMMONWEALTH OF VIRGINIA
DEPARTMENT OF TRANSPORTATION

STRUCTURE AND BRIDGE DIVISION

APPROACH SLABS

Designed: S&B DIV
Drawn: S&B DIV
Checked: S&B DIV

Date | Plan No. BAS-17AR | Sheet No.

Scale as noted

©2013, Commonwealth of Virginia

APPROACH SLAB

SKEW 20° OR LESS, SKEW RIGHT
STRUCTURE WITH SIDEWALKS;
APPROACH ROADWAY ASPHALT CONCRETE

NOTES TO DESIGNER:

Standard to be used when approach roadway is to be constructed of asphalt concrete.

Standard is for: Skew 20° or less, skew right
Structure with sidewalks

ADD THE FOLLOWING NOTES, DIMENSIONS, DETAILS, ETC. TO STANDARD:

PLAN:

Enter skew angle, width dimension and number of spaces for AS bars (top and bottom). Check details of corner(s) where approach slab rests on back of abutment backwall. Modify details as needed when using integral abutments, elephant ear wing walls, etc. Modify when sidewalk is only on one side.

REINFORCING STEEL SCHEDULE:

Enter number of bars and length of AS0503 bar.

ESTIMATED QUANTITIES:

Indicate type of asphalt concrete overlay (in heading).

Enter concrete, reinforcing steel and asphalt concrete quantities for Abutments A and B and Totals.

STATE	FEDERAL AID ROUTE	FEDERAL AID PROJECT	STATE ROUTE	STATE PROJECT	SHEET NO.
VA.	—				

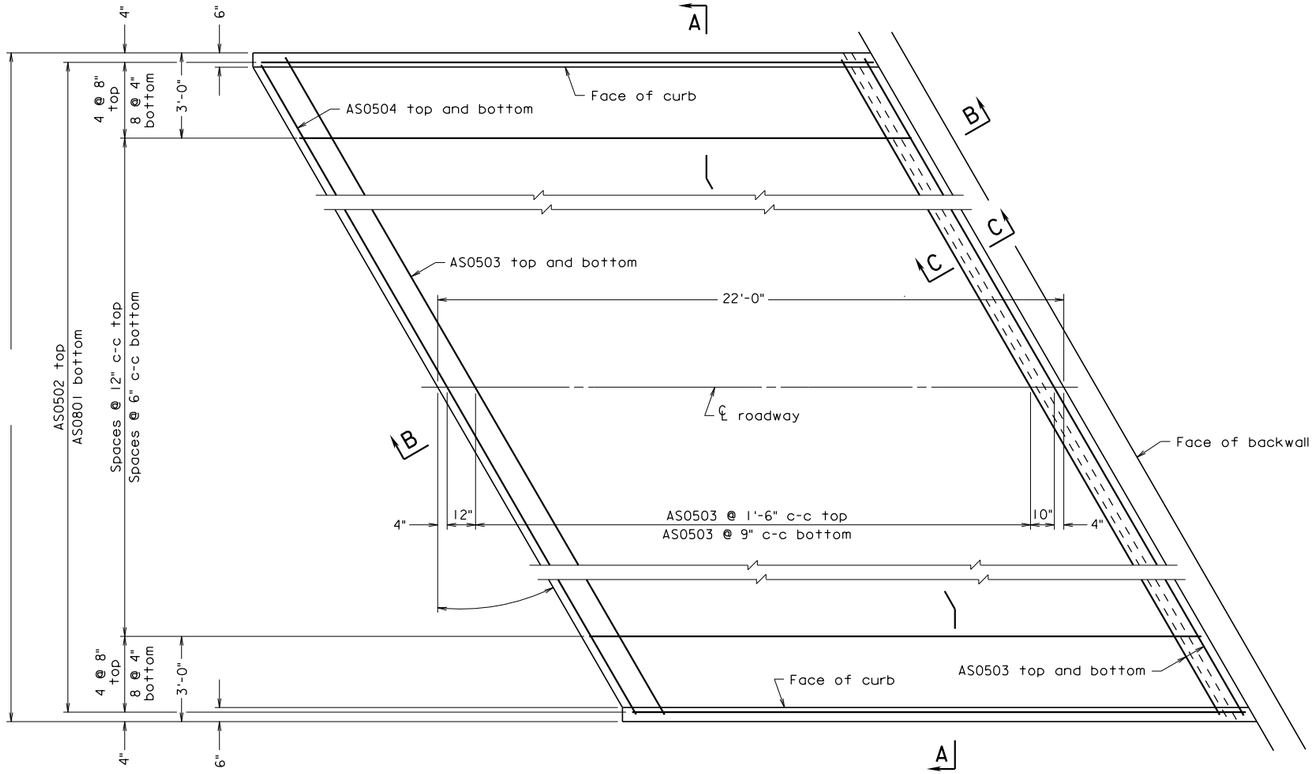

PLAN
Scale: 3/8" = 1'-0"

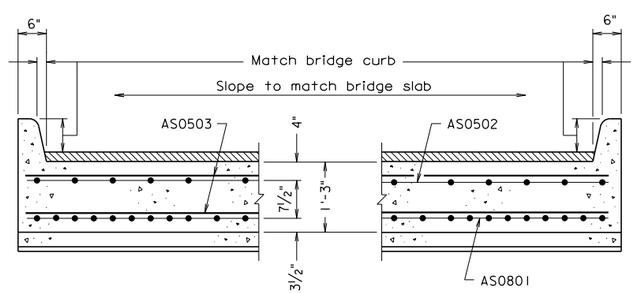

SECTION A-A
Scale: 3/4" = 1'-0"

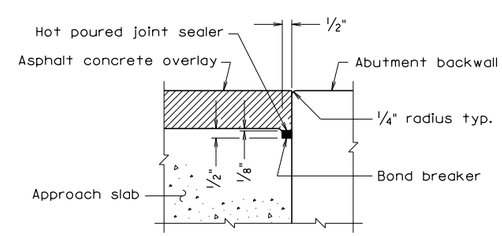

SECTION C-C
Scale: 3" = 1'-0"

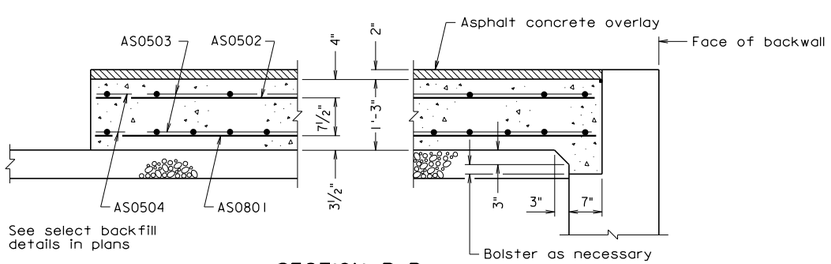

SECTION B-B
Scale: 3/4" = 1'-0"

Notes:

All joints that are to be sealed shall be free of cracked and spalled areas and their faces shall be free of all foreign matter, curing compound, oils, greases and dirt. All faces must be sandblasted or brushed with a mechanical rotary wire brush. Just prior to sealing, the joint shall be blown out with oil-free compressed air.

Deformed reinforcing bars shall conform to ASTM A615, Grade 60. All reinforcing bar dimensions except for bending diagram are to centers of bars.

Prime aggregate base material with 0.35 gal. per sq. yd. Liquid Asphalt Material Type RC-70, RC-250 or MC-250 if aggregate base is exposed for more than two weeks. Cost included in select backfill.

No grooving is required. The finish shall include a multi-ply damp fabric dragged over the approach slab surface to provide a gritty texture.

REINFORCING STEEL SCHEDULE

Mark	No.	Size	Pin ø	Length	Location
AS0801	·	#8	—	21'-6"	Bottom longitudinal
AS0502	·	#5	—	21'-6"	Top longitudinal
AS0503	·	#5	—	·	Top and bottom transverse
AS0504	·	#5	—	·	Top and bottom transverse
·	·	·	·	·	·
·	·	·	·	·	·
·	·	·	·	·	·
·	·	·	·	·	·

ESTIMATED QUANTITIES

	Concrete Class A4 Bridge Approach Slab ⊗ CY	Reinforcing Steel Bridge Approach Slab ⊗ LB	Asphalt Concrete Type Ton
Abutment A	·	·	·
Abutment B	·	·	·
Totals	·	·	·

⊗ Denotes items to be paid for on basis of plan quantities in accordance with current Road and Bridge Specifications.

bas18al.dgn

05-03-2013

BAS-18AL

Sealed and Signed by:
Julius F.J. Volgyi Jr.
Lic. No. 010487
On the date of
May 3, 2013

A copy of the original sealed and signed standard drawing is on file in the Central Office.

VDOT S&B DIVISION
RICHMOND, VA
STRUCTURAL ENGINEER

No.	Description	Date
	Revisions	

COMMONWEALTH OF VIRGINIA
DEPARTMENT OF TRANSPORTATION

STRUCTURE AND BRIDGE DIVISION

APPROACH SLABS

Designed: S&B DIV
Drawn: S&B DIV
Checked: S&B DIV

Date

Plan No. BAS-18AL

Sheet No.

Scale as noted

© 2013, Commonwealth of Virginia

APPROACH SLAB

SKEW 20° TO 35°, SKEW LEFT
STRUCTURE WITH SIDEWALKS;
APPROACH ROADWAY ASPHALT CONCRETE

NOTES TO DESIGNER:

Standard to be used when approach roadway is to be constructed of asphalt concrete.

Standard is for: Skew over 20° to 35°, skew left
Structure with sidewalks

ADD THE FOLLOWING NOTES, DIMENSIONS, DETAILS, ETC. TO STANDARD:

PLAN:

Enter skew angle, width dimension and number of spaces for AS bars (top and bottom). Check details of corner(s) where approach slab rests on back of abutment backwall. Modify details as needed when using integral abutments, elephant ear wing walls, etc. Modify when sidewalk is only on one side.

REINFORCING STEEL SCHEDULE:

Enter number of bars and length of AS0503 and AS0504 bars.

ESTIMATED QUANTITIES:

Indicate type of asphalt concrete overlay (in heading).

Enter concrete, reinforcing steel and asphalt concrete quantities for Abutments A and B and Totals.

STATE	FEDERAL AID ROUTE	FEDERAL AID PROJECT	STATE ROUTE	STATE PROJECT	SHEET NO.
VA.	—				

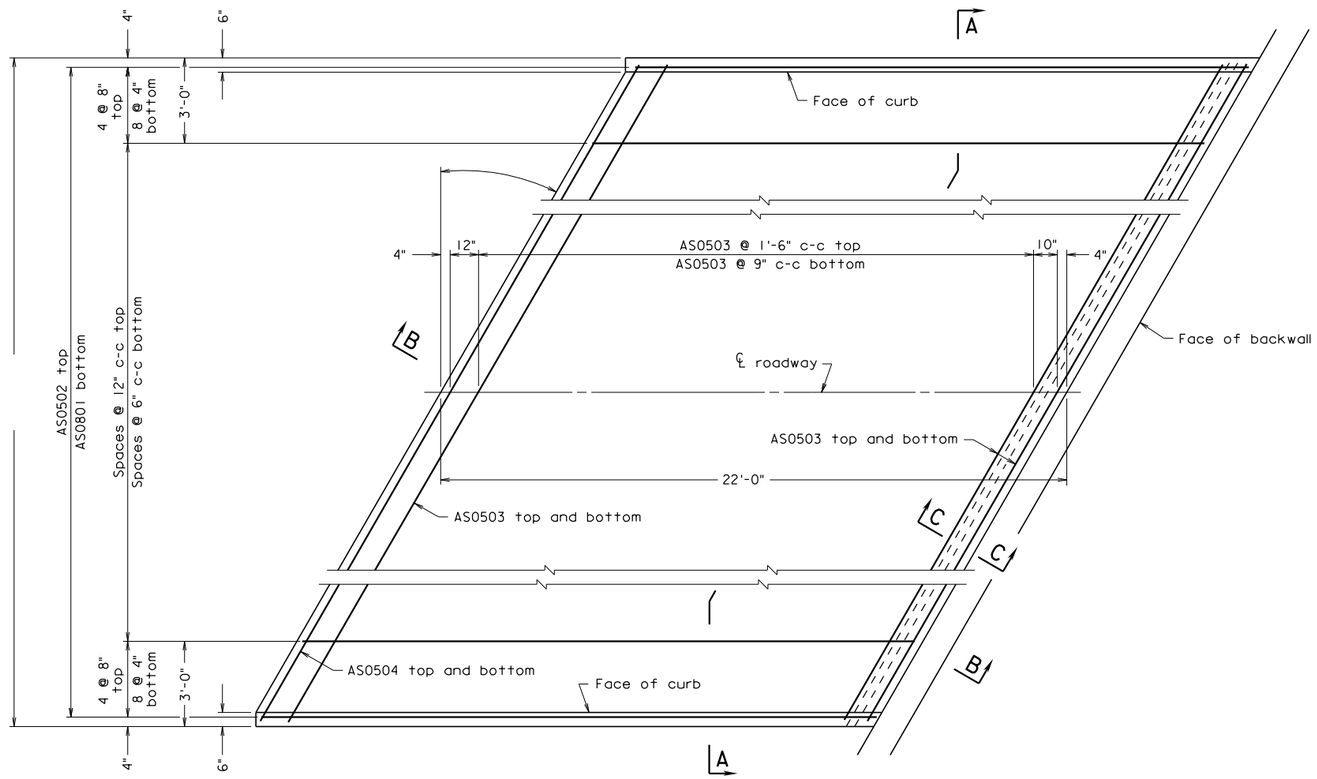

PLAN
Scale: 3/8" = 1'-0"

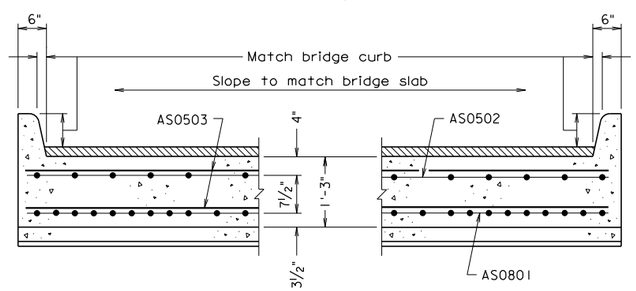

SECTION A-A
Scale: 3/4" = 1'-0"

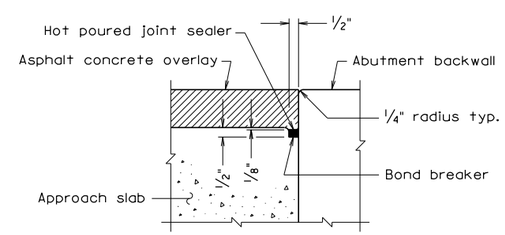

SECTION C-C
Scale: 3" = 1'-0"

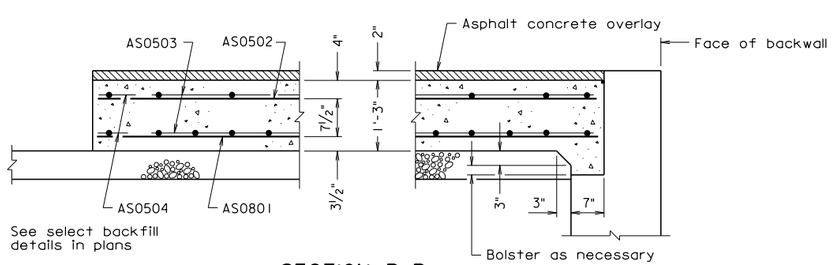

SECTION B-B
Scale: 3/4" = 1'-0"

Notes:

All joints that are to be sealed shall be free of cracked and spalled areas and their faces shall be free of all foreign matter, curing compound, oils, greases and dirt. All faces must be sandblasted or brushed with a mechanical rotary wire brush. Just prior to sealing, the joint shall be blown out with oil-free compressed air.

Deformed reinforcing bars shall conform to ASTM A615, Grade 60. All reinforcing bar dimensions except for bending diagram are to centers of bars.

Prime aggregate base material with 0.35 gal. per sq. yd. Liquid Asphalt Material Type RC-70, RC-250 or MC-250 if aggregate base is exposed for more than two weeks. Cost included in select backfill.

No grooving is required. The finish shall include a multi-ply damp fabric dragged over the approach slab surface to provide a gritty texture.

REINFORCING STEEL SCHEDULE

Mark	No.	Size	Pin ø	Length	Location
AS0801	·	#8	—	21'-6"	Bottom longitudinal
AS0502	·	#5	—	21'-6"	Top longitudinal
AS0503	·	#5	—	·	Top and bottom transverse
AS0504	·	#5	—	·	Top and bottom transverse
·	·	·	·	·	·
·	·	·	·	·	·
·	·	·	·	·	·
·	·	·	·	·	·

ESTIMATED QUANTITIES

	Concrete Class A4 Bridge Approach Slab ⊗ CY	Reinforcing Steel Bridge Approach Slab ⊗ LB	Asphalt Concrete Type Ton
Abutment A	·	·	·
Abutment B	·	·	·
Totals	·	·	·

⊗ Denotes items to be paid for on basis of plan quantities in accordance with current Road and Bridge Specifications.

bas18ar.dgn

BAS-18AR 05-03-2013

Sealed and Signed by:
Julius F.J. Volgyi Jr.
Lic. No. 010487
On the date of
May 3, 2013

A copy of the original sealed and signed standard drawing is on file in the Central Office.

VDOT S&B DIVISION
RICHMOND, VA
STRUCTURAL ENGINEER

No.	Description	Date
	Revisions	

COMMONWEALTH OF VIRGINIA
DEPARTMENT OF TRANSPORTATION

STRUCTURE AND BRIDGE DIVISION

APPROACH SLABS

Designed: S&B DIV
Drawn: S&B DIV
Checked: S&B DIV

Date | Plan No. BAS-18AR | Sheet No.

Scale as noted

©2013, Commonwealth of Virginia

APPROACH SLAB

SKEW 20° TO 35°, SKEW RIGHT
STRUCTURE WITH SIDEWALKS;
APPROACH ROADWAY ASPHALT CONCRETE

NOTES TO DESIGNER:

Standard to be used when approach roadway is to be constructed of asphalt concrete.

Standard is for: Skew over 20° to 35°, skew right
Structure with sidewalks

ADD THE FOLLOWING NOTES, DIMENSIONS, DETAILS, ETC. TO STANDARD:

PLAN:

Enter skew angle, width dimension and number of spaces for AS bars (top and bottom). Check details of corner(s) where approach slab rests on back of abutment backwall. Modify details as needed when using integral abutments, elephant ear wing walls, etc. Modify when sidewalk is only on one side.

REINFORCING STEEL SCHEDULE:

Enter number of bars and length of AS0503 and AS0504 bars.

ESTIMATED QUANTITIES:

Indicate type of asphalt concrete overlay (in heading).

Enter concrete, reinforcing steel and asphalt concrete quantities for Abutments A and B and Totals.

STATE	FEDERAL AID ROUTE	FEDERAL AID PROJECT	STATE ROUTE	STATE PROJECT	SHEET NO.
VA.	—				

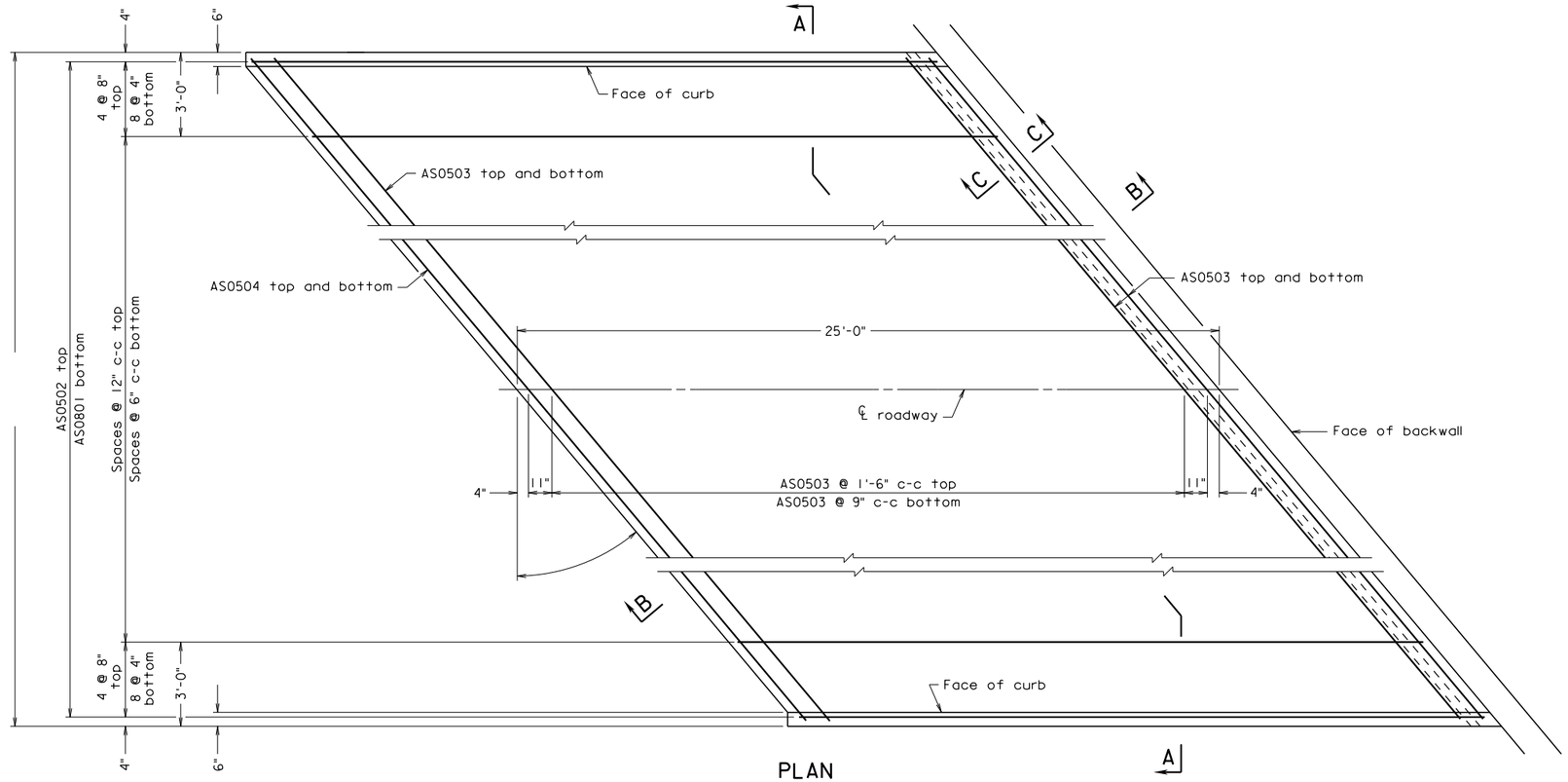

PLAN
Scale: 3/8" = 1'-0"

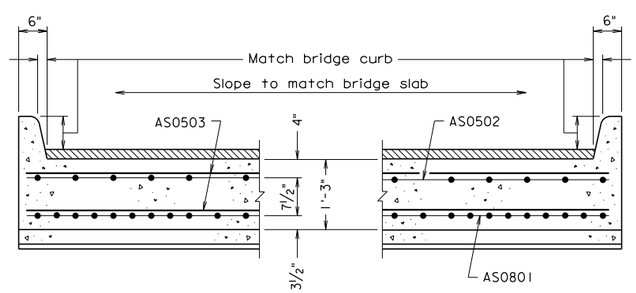

SECTION A-A
Scale: 3/4" = 1'-0"

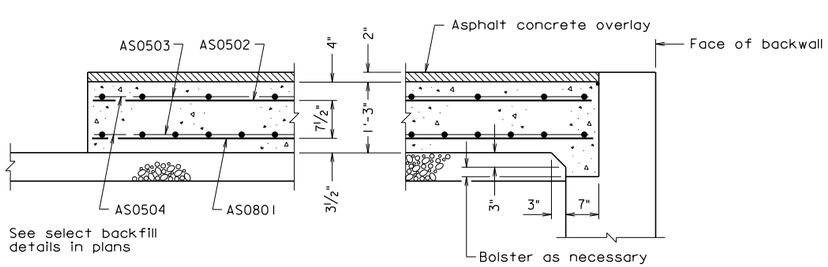

SECTION B-B
Scale: 3/4" = 1'-0"

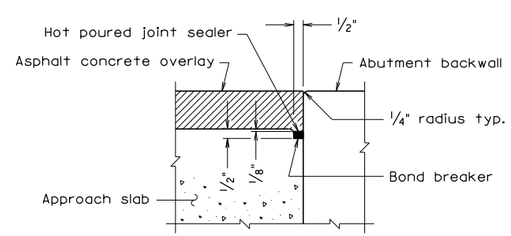

SECTION C-C
Scale: 3" = 1'-0"

Notes:

All joints that are to be sealed shall be free of cracked and spalled areas and their faces shall be free of all foreign matter, curing compound, oils, greases and dirt. All faces must be sandblasted or brushed with a mechanical rotary wire brush. Just prior to sealing, the joint shall be blown out with oil-free compressed air.

Deformed reinforcing bars shall conform to ASTM A615, Grade 60. All reinforcing bar dimensions except for bending diagram are to centers of bars.

Prime aggregate base material with 0.35 gal. per sq. yd. Liquid Asphalt Material Type RC-70, RC-250 or MC-250 if aggregate base is exposed for more than two weeks. Cost included in select backfill.

No grooving is required. The finish shall include a multi-ply damp fabric dragged over the approach slab surface to provide a gritty texture.

REINFORCING STEEL SCHEDULE

Mark	No.	Size	Pin ø	Length	Location
AS0801	·	#8	—	24'-5"	Bottom longitudinal
AS0502	·	#5	—	24'-5"	Top longitudinal
AS0503	·	#5	—	·	Top and bottom transverse
AS0504	·	#5	—	·	Top and bottom transverse
·	·	·	·	·	·
·	·	·	·	·	·
·	·	·	·	·	·
·	·	·	·	·	·

ESTIMATED QUANTITIES

	Concrete Class A4 Bridge Approach Slab ⊗ CY	Reinforcing Steel Bridge Approach Slab ⊗ LB	Asphalt Concrete Type Ton
Abutment A	·	·	·
Abutment B	·	·	·
Totals	·	·	·

⊗ Denotes items to be paid for on basis of plan quantities in accordance with current Road and Bridge Specifications.

Sealed and Signed by:
Julius F.J. Volgyi Jr.
Lic. No. 010487
On the date of
May 3, 2013

A copy of the original sealed and signed standard drawing is on file in the Central Office.

VDOT S&B DIVISION
RICHMOND, VA
STRUCTURAL ENGINEER

No.	Description	Date

Revisions

COMMONWEALTH OF VIRGINIA
DEPARTMENT OF TRANSPORTATION

STRUCTURE AND BRIDGE DIVISION

APPROACH SLABS

Designed: S&B DIV
Drawn: S&B DIV
Checked: S&B DIV

Date

Plan No. BAS-19AL

Sheet No.

Scale as noted

© 2013, Commonwealth of Virginia

bas19al.dgn

05-03-2013

BAS-19AL

APPROACH SLAB

SKEW 35° TO 45°, SKEW LEFT
STRUCTURE WITH SIDEWALKS;
APPROACH ROADWAY ASPHALT CONCRETE

NOTES TO DESIGNER:

Standard to be used when approach roadway is to be constructed of asphalt concrete.

Standard is for: Skew over 35° to 45°, skew left
Structure with sidewalks

ADD THE FOLLOWING NOTES, DIMENSIONS, DETAILS, ETC. TO STANDARD:

PLAN:

Enter skew angle, width dimension and number of spaces for AS bars (top and bottom). Check details of corner(s) where approach slab rests on back of abutment backwall. Modify details as needed when using elephant ear wing walls, etc. Modify when sidewalk is only on one side.

REINFORCING STEEL SCHEDULE:

Enter number of bars and length of AS0503 and AS0504 bars.

ESTIMATED QUANTITIES:

Indicate type of asphalt concrete overlay (in heading).

Enter concrete, reinforcing steel and asphalt concrete quantities for Abutments A and B and Totals.

STATE	FEDERAL AID ROUTE	FEDERAL AID PROJECT	STATE ROUTE	STATE PROJECT	SHEET NO.
VA.	—				

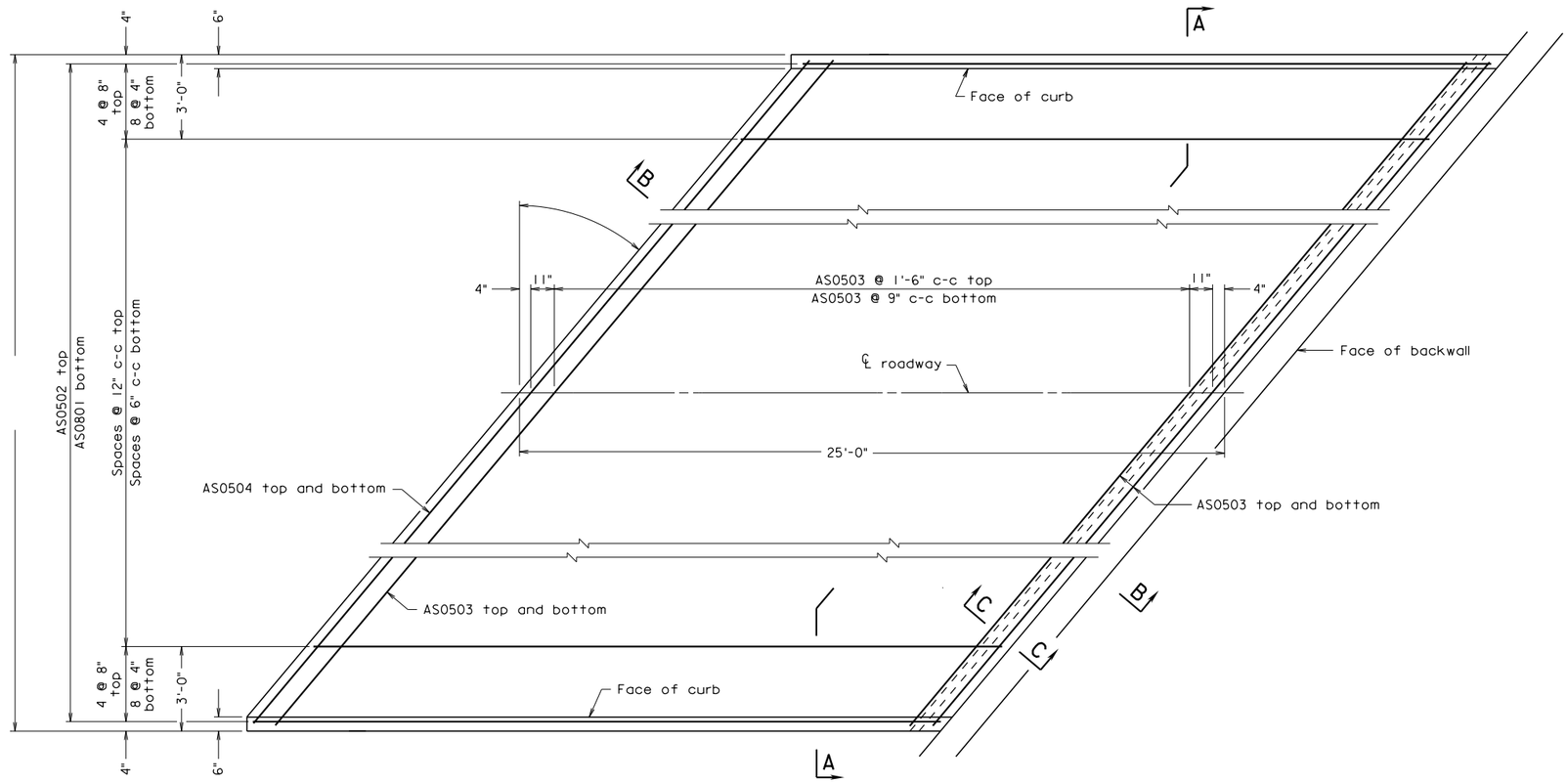

PLAN
Scale: 3/8" = 1'-0"

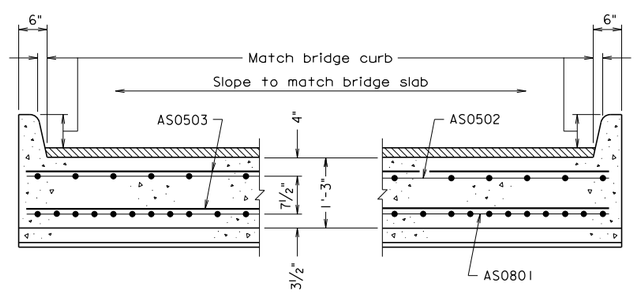

SECTION A-A
Scale: 3/4" = 1'-0"

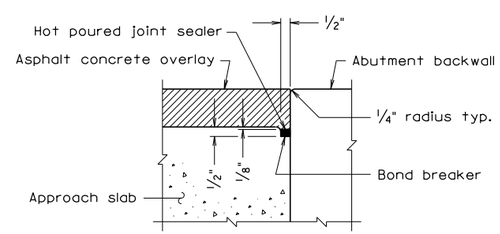

SECTION C-C
Scale: 3" = 1'-0"

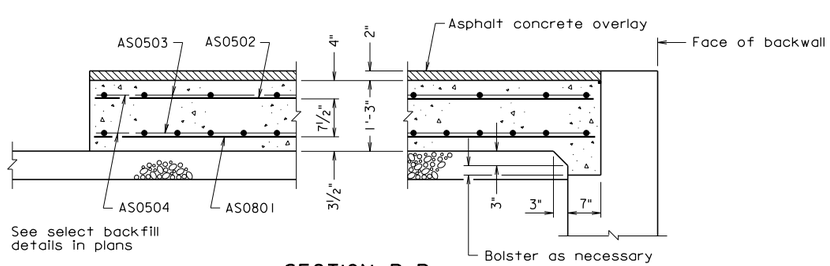

SECTION B-B
Scale: 3/4" = 1'-0"

Notes:

All joints that are to be sealed shall be free of cracked and spalled areas and their faces shall be free of all foreign matter, curing compound, oils, greases and dirt. All faces must be sandblasted or brushed with a mechanical rotary wire brush. Just prior to sealing, the joint shall be blown out with oil-free compressed air.

Deformed reinforcing bars shall conform to ASTM A615, Grade 60. All reinforcing bar dimensions except for bending diagram are to centers of bars.

Prime aggregate base material with 0.35 gal. per sq. yd. Liquid Asphalt Material Type RC-70, RC-250 or MC-250 if aggregate base is exposed for more than two weeks. Cost included in select backfill.

No grooving is required. The finish shall include a multi-ply damp fabric dragged over the approach slab surface to provide a gritty texture.

REINFORCING STEEL SCHEDULE

Mark	No.	Size	Pin ø	Length	Location
AS0801	·	#8	—	24'-5"	Bottom longitudinal
AS0502	·	#5	—	24'-5"	Top longitudinal
AS0503	·	#5	—	·	Top and bottom transverse
AS0504	·	#5	—	·	Top and bottom transverse
·	·	·	·	·	·
·	·	·	·	·	·
·	·	·	·	·	·
·	·	·	·	·	·

ESTIMATED QUANTITIES

	Concrete Class A4 Bridge Approach Slab ⊗ CY	Reinforcing Steel Bridge Approach Slab ⊗ LB	Asphalt Concrete Type Ton
Abutment A	·	·	·
Abutment B	·	·	·
Totals	·	·	·

⊗ Denotes items to be paid for on basis of plan quantities in accordance with current Road and Bridge Specifications.

basl9ar.dgn

BAS-19AR 05-03-2013

Sealed and Signed by:
Julius F.J. Volgyi Jr.
Lic. No. 010487
On the date of
May 3, 2013

A copy of the original sealed and signed standard drawing is on file in the Central Office.

VDOT S&B DIVISION
RICHMOND, VA
STRUCTURAL ENGINEER

No.	Description	Date
	Revisions	

Scale as noted

© 2013, Commonwealth of Virginia

COMMONWEALTH OF VIRGINIA
DEPARTMENT OF TRANSPORTATION

STRUCTURE AND BRIDGE DIVISION

APPROACH SLABS

Designed: S&B DIV
Drawn: S&B DIV
Checked: S&B DIV

Date

Plan No. BAS-19AR

Sheet No.

APPROACH SLAB

SKEW 35° TO 45°, SKEW RIGHT
STRUCTURE WITH SIDEWALKS;
APPROACH ROADWAY ASPHALT CONCRETE

NOTES TO DESIGNER:

Standard to be used when approach roadway is to be constructed of asphalt concrete.

Standard is for: Skew over 35° to 45°, skew right
Structure with sidewalks

ADD THE FOLLOWING NOTES, DIMENSIONS, DETAILS, ETC. TO STANDARD:

PLAN:

Enter skew angle, width dimension and number of spaces for AS bars (top and bottom). Check details of corner(s) where approach slab rests on back of abutment backwall. Modify details as needed when using elephant ear wing walls, etc. Modify when sidewalk is only on one side.

REINFORCING STEEL SCHEDULE:

Enter number of bars and length of AS0503 and AS0504 bars.

ESTIMATED QUANTITIES:

Indicate type of asphalt concrete overlay (in heading).

Enter concrete, reinforcing steel and asphalt concrete quantities for Abutments A and B and Totals.

STATE	FEDERAL AID ROUTE	FEDERAL AID PROJECT	STATE ROUTE	STATE PROJECT	SHEET NO.
VA.	—				

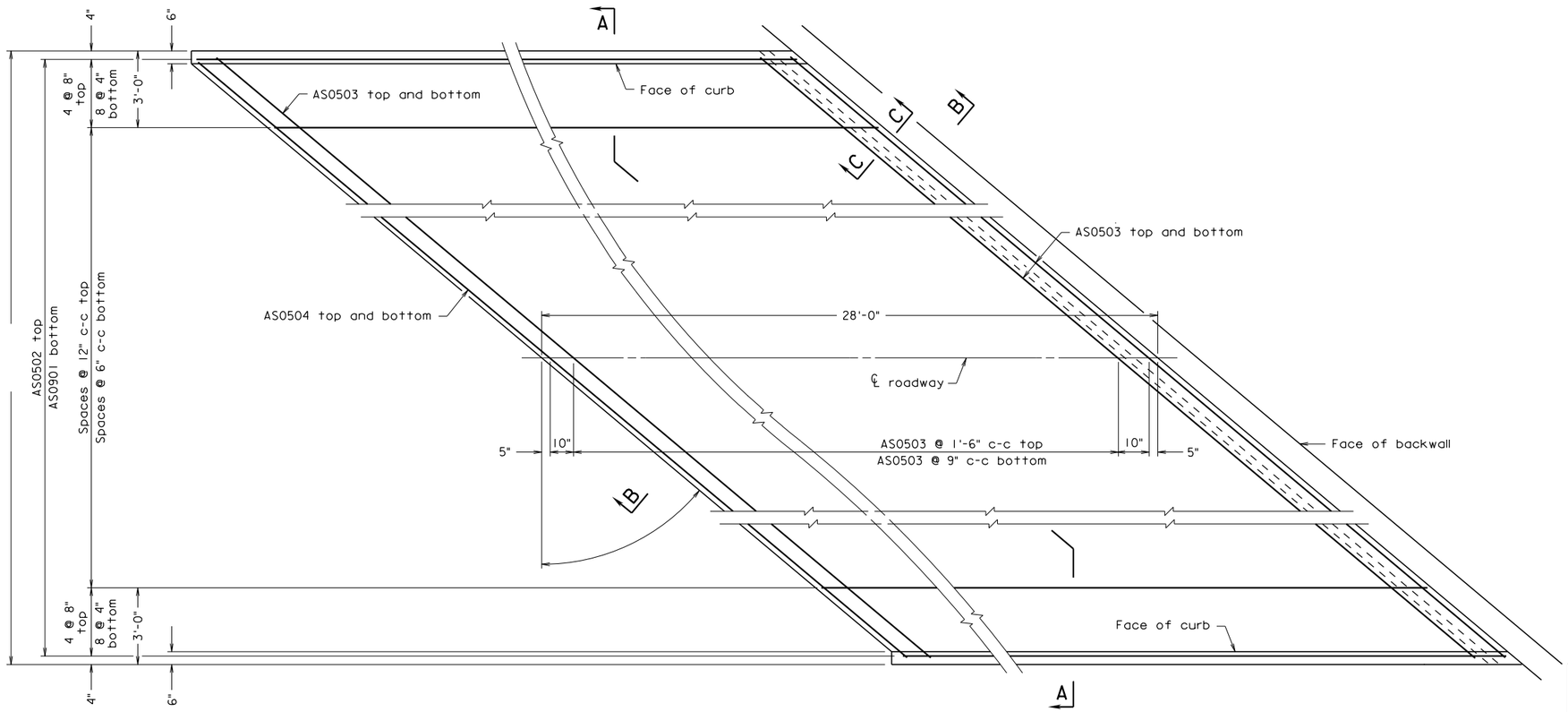

PLAN
Scale: 3/8" = 1'-0"

Notes:

All joints that are to be sealed shall be free of cracked and spalled areas and their faces shall be free of all foreign matter, curing compound, oils, greases and dirt. All faces must be sandblasted or brushed with a mechanical rotary wire brush. Just prior to sealing, the joint shall be blown out with oil-free compressed air.

Deformed reinforcing bars shall conform to ASTM A615, Grade 60. All reinforcing bar dimensions except for bending diagram are to centers of bars.

Prime aggregate base material with 0.35 gal. per sq. yd. Liquid Asphalt Material Type RC-70, RC-250 or MC-250 if aggregate base is exposed for more than two weeks. Cost included in select backfill.

No grooving is required. The finish shall include a multi-ply damp fabric dragged over the approach slab surface to provide a gritty texture.

REINFORCING STEEL SCHEDULE

Mark	No.	Size	Pin ø	Length	Location
AS0901	·	#9	—	27'-5"	Bottom longitudinal
AS0502	·	#5	—	27'-5"	Top longitudinal
AS0503	·	#5	—	·	Top and bottom transverse
AS0504	·	#5	·	·	Top and bottom transverse
·	·	·	·	·	·
·	·	·	·	·	·
·	·	·	·	·	·
·	·	·	·	·	·

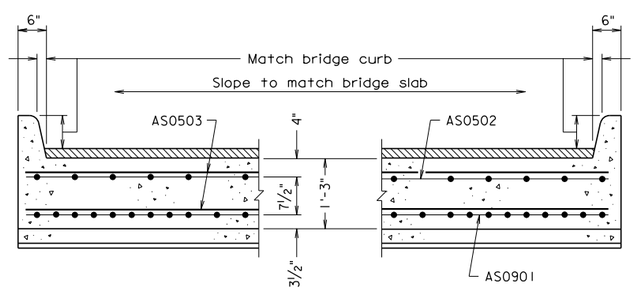

SECTION A-A
Scale: 3/4" = 1'-0"

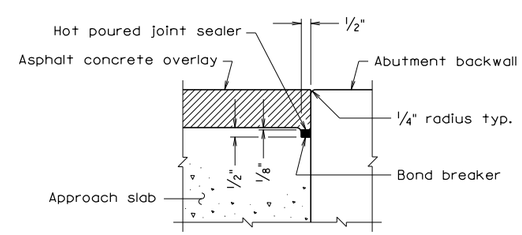

SECTION C-C
Scale: 3" = 1'-0"

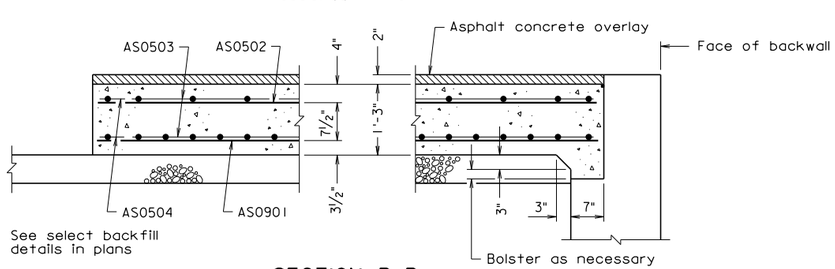

SECTION B-B
Scale: 3/4" = 1'-0"

ESTIMATED QUANTITIES

	Concrete Class A4 Bridge Approach Slab ⊗ CY	Reinforcing Steel Bridge Approach Slab ⊗ LB	Asphalt Concrete Type Ton
Abutment A	·	·	·
Abutment B	·	·	·
Totals	·	·	·

⊗ Denotes items to be paid for on basis of plan quantities in accordance with current Road and Bridge Specifications.

Sealed and Signed by: Julius F.J. Volgyi Jr. Lic. No. 010487 On the date of May 3, 2013

A copy of the original sealed and signed standard drawing is on file in the Central Office.

VDOT S&B DIVISION
RICHMOND, VA
STRUCTURAL ENGINEER

BAS-20AL 05-03-2013

bas20al.dgn

No.	Description	Date
	Revisions	

COMMONWEALTH OF VIRGINIA
DEPARTMENT OF TRANSPORTATION

STRUCTURE AND BRIDGE DIVISION

APPROACH SLABS

Designed: S&B DIV
Drawn: S&B DIV
Checked: S&B DIV

Date

Plan No. BAS-20AL

Sheet No.

Scale as noted

© 2013, Commonwealth of Virginia

APPROACH SLAB

SKEW 45° TO 50°, SKEW LEFT
STRUCTURE WITH SIDEWALKS;
APPROACH ROADWAY ASPHALT CONCRETE

NOTES TO DESIGNER:

Standard to be used when approach roadway is to be constructed of asphalt concrete.

Standard is for: Skew over 45° to 50°, skew left
Structure with sidewalks

ADD THE FOLLOWING NOTES, DIMENSIONS, DETAILS, ETC. TO STANDARD:

PLAN:

Enter skew angle, width dimension and number of spaces for AS bars (top and bottom). Check details of corner(s) where approach slab rests on back of abutment backwall. Modify details as needed when using elephant ear wing walls, etc. Modify when sidewalk is only on one side.

REINFORCING STEEL SCHEDULE:

Enter number of bars and length of AS0503 and AS0504 bars.

ESTIMATED QUANTITIES:

Indicate type of asphalt concrete overlay (in heading).

Enter concrete, reinforcing steel and asphalt concrete quantities for Abutments A and B and Totals.

STATE	FEDERAL AID ROUTE	FEDERAL AID PROJECT	STATE ROUTE	STATE PROJECT	SHEET NO.
VA.	—				

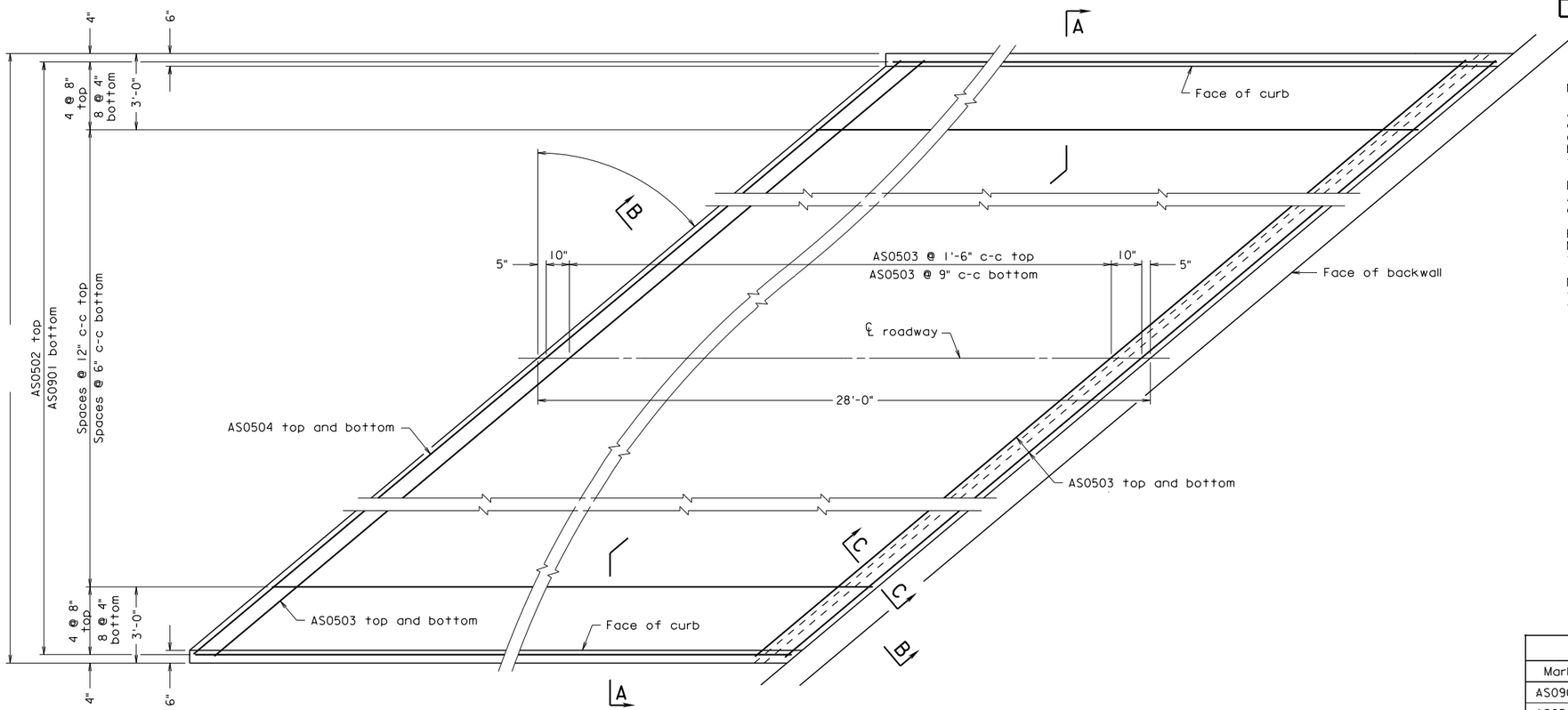

PLAN
Scale: 3/8" = 1'-0"

Notes:

All joints that are to be sealed shall be free of cracked and spalled areas and their faces shall be free of all foreign matter, curing compound, oils, greases and dirt. All faces must be sandblasted or brushed with a mechanical rotary wire brush. Just prior to sealing, the joint shall be blown out with oil-free compressed air.

Deformed reinforcing bars shall conform to ASTM A615, Grade 60. All reinforcing bar dimensions except for bending diagram are to centers of bars.

Prime aggregate base material with 0.35 gal. per sq. yd. Liquid Asphalt Material Type RC-70, RC-250 or MC-250 if aggregate base is exposed for more than two weeks. Cost included in select backfill.

No grooving is required. The finish shall include a multi-ply damp fabric dragged over the approach slab surface to provide a gritty texture.

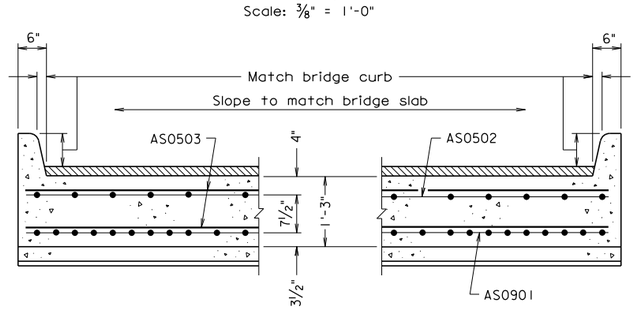

SECTION A-A
Scale: 3/4" = 1'-0"

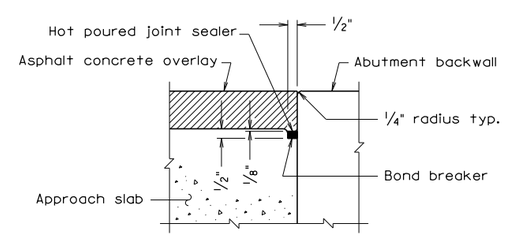

SECTION C-C
Scale: 3" = 1'-0"

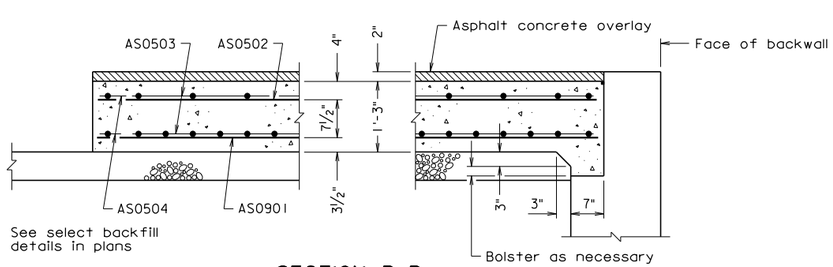

SECTION B-B
Scale: 3/4" = 1'-0"

REINFORCING STEEL SCHEDULE

Mark	No.	Size	Pin ø	Length	Location
AS0901	·	#9	—	27'-5"	Bottom longitudinal
AS0502	·	#5	—	27'-5"	Top longitudinal
AS0503	·	#5	—	·	Top and bottom transverse
AS0504	·	#5	·	·	Top and bottom transverse
·	·	·	·	·	·
·	·	·	·	·	·
·	·	·	·	·	·
·	·	·	·	·	·

ESTIMATED QUANTITIES

	Concrete Class A4 Bridge Approach Slab ⊗ CY	Reinforcing Steel Bridge Approach Slab ⊗ LB	Asphalt Concrete Type Ton
Abutment A	·	·	·
Abutment B	·	·	·
Totals	·	·	·

⊗ Denotes items to be paid for on basis of plan quantities in accordance with current Road and Bridge Specifications.

bas20ar.dgn

BAS-20AR 05-03-2013

Sealed and Signed by:
Julius F.J. Volgyi Jr.
Lic. No. 010487
On the date of
May 3, 2013

A copy of the original sealed and signed standard drawing is on file in the Central Office.

VDOT S&B DIVISION
RICHMOND, VA
STRUCTURAL ENGINEER

No.	Description	Date

Revisions

Scale as noted

© 2013, Commonwealth of Virginia

COMMONWEALTH OF VIRGINIA
DEPARTMENT OF TRANSPORTATION

STRUCTURE AND BRIDGE DIVISION

APPROACH SLABS

Designed: S&B DIV
Drawn: S&B DIV
Checked: S&B DIV

Date | Plan No. BAS-20AR | Sheet No.

APPROACH SLAB

SKEW 45° TO 50°, SKEW RIGHT
STRUCTURE WITH SIDEWALKS;
APPROACH ROADWAY ASPHALT CONCRETE

NOTES TO DESIGNER:

Standard to be used when approach roadway is to be constructed of asphalt concrete.

Standard is for: Skew over 45° to 50°, skew right
Structure with sidewalks

ADD THE FOLLOWING NOTES, DIMENSIONS, DETAILS, ETC. TO STANDARD:

PLAN:

Enter skew angle, width dimension and number of spaces for AS bars (top and bottom). Check details of corner(s) where approach slab rests on back of abutment backwall. Modify details as needed when using elephant ear wing walls, etc. Modify when sidewalk is only on one side.

REINFORCING STEEL SCHEDULE:

Enter number of bars and length of AS0503 and AS0504 bars.

ESTIMATED QUANTITIES:

Indicate type of asphalt concrete overlay (in heading).

Enter concrete, reinforcing steel and asphalt concrete quantities for Abutments A and B and Totals.

STATE	FEDERAL AID ROUTE	FEDERAL AID PROJECT	STATE ROUTE	STATE PROJECT	SHEET NO.
VA.	—				

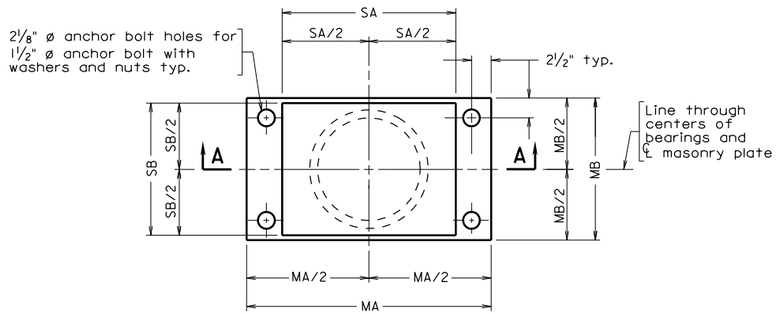

PLAN

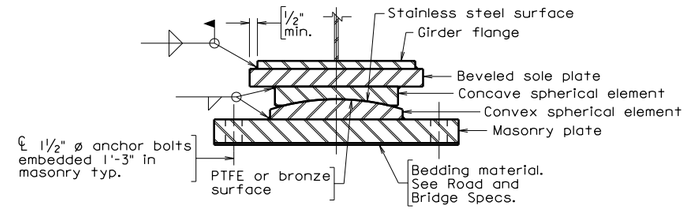

SECTION A-A
FIXED SPHERICAL BEARING
TYPE FF

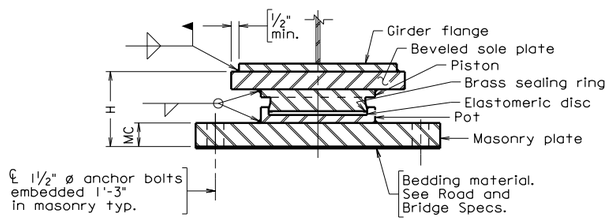

SECTION A-A
FIXED POT BEARING
TYPE FF

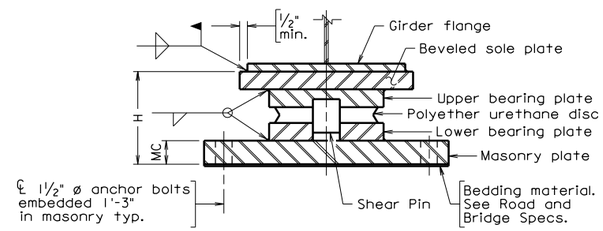

SECTION A-A
FIXED DISC BEARING
TYPE FF

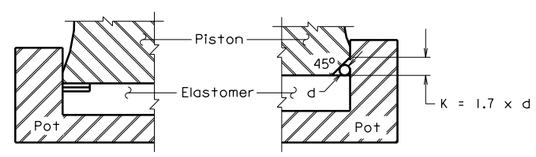

FLAT RING SEAL

ROUND RING
IN CHAMFER

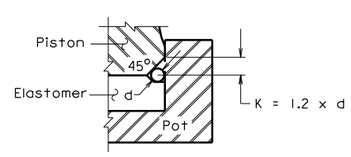

ROUND RING
RECESSED IN RUBBER

SEALING RING DETAILS

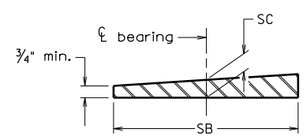

BEVELED SOLE PLATE

Notes:

S.H.C.S. designates socket head cap screws.

Bearings shall conform to Section 408.03(a), High Load Multi-Rotational Bearings, of the Specifications.

To restrict transverse movement, either a guide bar or keyway system shall be used.

Fill holes in masonry plate around anchor bolts with a nonhardening caulking compound or elastic joint sealer.

At no additional cost to the Department, pot, spherical or disc bearings differing in detail from those shown may be supplied provided they meet the requirements of Section 408.03(a) of the Specifications and are approved by the Engineer. Bridge seat elevations are based on Total Bearing Height H in table and shall be adjusted by Contractor based on height of bearing furnished.

Pot, spherical and disc bearings shall not be mixed at the same substructure support.

In lieu of welding, the pot may be recessed into the masonry plate. If this is done, the edge thickness of the masonry plate (MC) shall be increased by the depth of the recess.

Bearing heights are based on the use of pot bearings with flat sealing rings.

The Design Movement is the maximum movement to one side of the bearing centerline. The total movement is twice the Design Movement.

The Horizontal Design Load for Non-Guided Bearings is given solely for the design of the potwall thickness and piston edge widths, spherical radii or shear pin diameter.

Stainless steel; PTFE and bronze surfaces; and surfaces in contact with the elastomeric disc, the polyether urethane disc or the shear pin shall not be painted.

Dimension SA is perpendiclular to the direction of movement and dimension SB is parallel to it.

Disc bearing design:

The instantaneous deflection under total load is limited to a maximum of 10% of the thickness of the unstressed disc.

Deflection caused by rotation is limited to the lesser of 10% of the thickness of the unstressed disc or the instantaneous deflection to prevent lift off during rotation.

The strain under total vertical load may not exceed 10%, the strain under rotation alone may not exceed 10% and the total strain due to combined vertical load and rotation may not exceed 20%.

The minimum design rotation is set at 0.025 radians to prevent damage to the rings and leakage of elastomer.

BEARING SCHEDULE

Location	Girder	Type	No. req'd.	Vertical design load kips		Horizontal design load kips	Sole Plate				Masonry Plate			Total bearing height H inches	Design rotation capacity of bearing Rb radians
							inches			%	inches				
				Min.	Max.		SA	SB	SC	Grade	MA	MB	MC		

Not to scale

©2010, Commonwealth of Virginia

No.	Description	Date
	Revisions	

COMMONWEALTH OF VIRGINIA
DEPARTMENT OF TRANSPORTATION

STRUCTURE AND BRIDGE DIVISION

HIGH LOAD MULTI-ROTATIONAL
BEARINGS
FIXED

Designed: .....
Drawn: ....S&B DIV
Checked: .....

Date

Plan No. BBD-6

Sheet No.

bbd6.dgn

06-14-2010.

BBD-6

VDOT S&B DIVISION
RICHMOND, VA
STRUCTURAL ENGINEER

STATE	FEDERAL AID ROUTE	FEDERAL AID PROJECT	STATE ROUTE	STATE PROJECT	SHEET NO.
VA.	—				

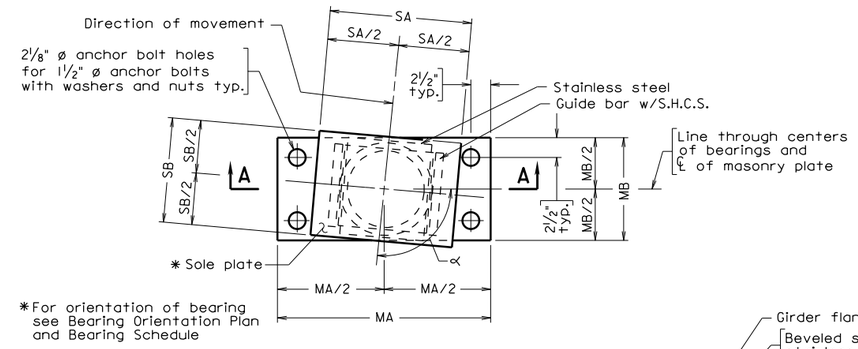

PLAN

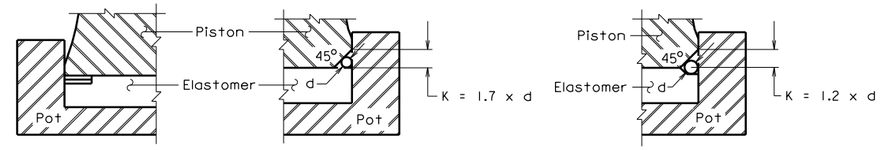

FLAT RING SEAL

ROUND RING IN CHAMFER

ROUND RING RECESSED IN RUBBER

SEALING RING DETAILS

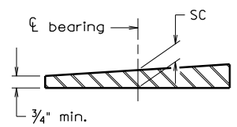

BEVELED SOLE PLATE

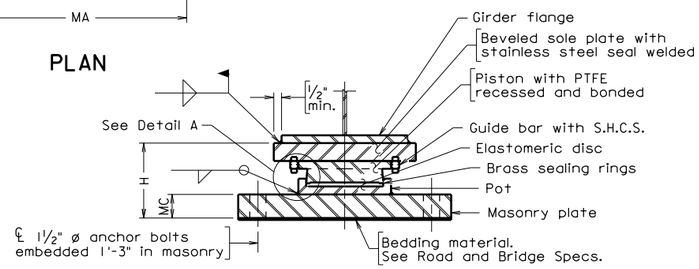

SECTION A-A
GUIDED POT EXPANSION BEARING
TYPE EF

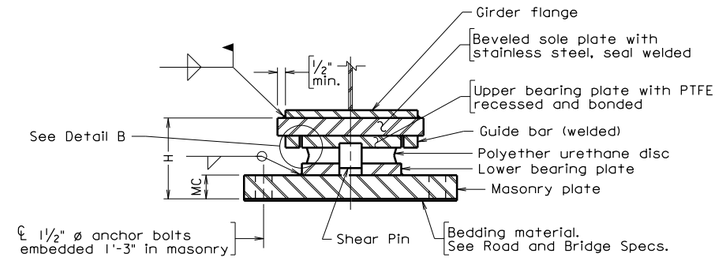

SECTION A-A
GUIDED DISC EXPANSION BEARING
TYPE EF

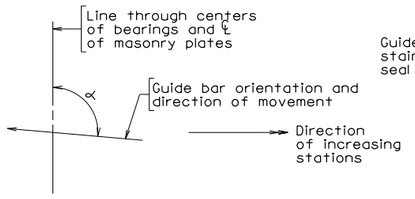

BEARING ORIENTATION PLAN

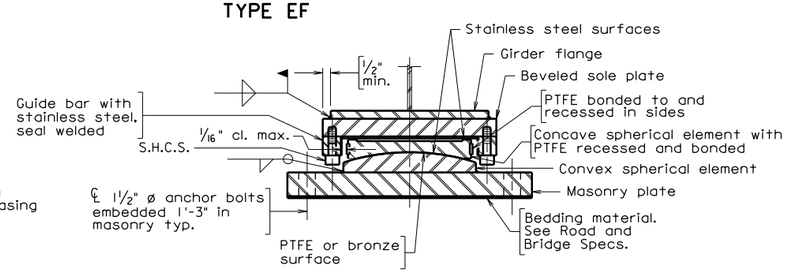

SECTION A-A
GUIDED SPHERICAL EXPANSION BEARING
TYPE EF

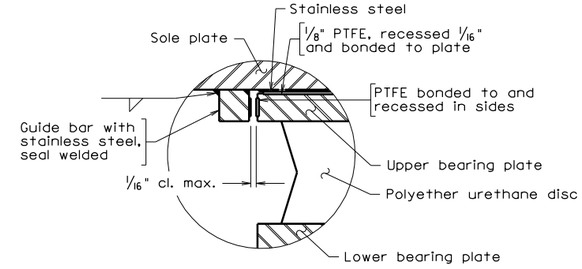

DETAIL B

Notes:

S.H.C.S. designates socket head cap screws.

Bearings shall conform to Section 408.03(a). High Load Multi-Rotational Bearings, of the Specifications.

To restrict transverse movement, either a guide bar or keyway system shall be used.

Fill holes in masonry plate around anchor bolts with a nonhardening caulking compound or elastic joint sealer.

At no additional cost to the Department, pot, spherical or disc bearings differing in detail from those shown may be supplied provided they meet the requirements of Section 408.03(a) of the Specifications and are approved by the Engineer. Bridge seat elevations are based on Total Bearing Height H in table and shall be adjusted by Contractor based on height of bearing furnished.

Pot, spherical and disc bearings shall not be mixed at the same substructure support.

In lieu of welding, the pot may be recessed into the masonry plate. If this is done, the edge thickness of the masonry plate (MC) shall be increased by the depth of the recess.

Bearing heights are based on the use of pot bearings with flat sealing rings.

The Design Movement is the maximum movement to one side of the bearing centerline. The total movement is twice the Design Movement.

The Horizontal Design Load for Non-Guided Bearings is given solely for the design of the potwall thickness and piston edge widths, spherical radii or shear pin diameter.

Stainless steel; PTFE and bronze surfaces; and surfaces in contact with the elastomeric disc, the polyether urethane disc or the shear pin shall not be painted.

Dimension SA is perpendiclular to the direction of movement and dimension SB is parallel to it.

Disc bearing design:

The instantaneous deflection under total load is limited to a maximum of 10% of the thickness of the unstressed disc.

Deflection caused by rotation is limited to the lesser of 10% of the thickness of the unstressed disc or the instantaneous deflection to prevent lift off during rotation.

The strain under total vertical load may not exceed 10%, the strain under rotation alone may not exceed 10% and the total strain due to combined vertical load and rotation may not exceed 20%.

The minimum design rotation is set at 0.025 radians to prevent damage to the rings and leakage of elastomer.

BEARING SCHEDULE

Location	Girder	Type	No. req'd.	Vertical design load kips		Horizontal design load kips	Design movement inches		Sole Plate				Masonry Plate			Total bearing height H inches	Design rotation capacity of bearing Rb radians	Orientation angle α degrees
									inches			%	inches					
				Min.	Max.		Long.	Tran.	SA	SB	SC	Grade	MA	MB	MC			

Not to scale

©2010, Commonwealth of Virginia

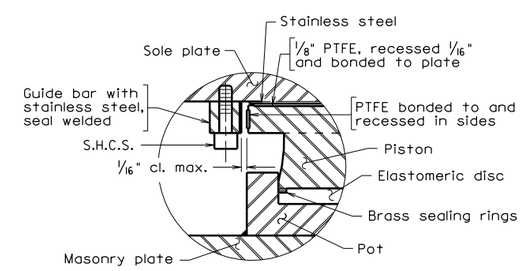

DETAIL A

No.	Description	Date
	Revisions	

COMMONWEALTH OF VIRGINIA
DEPARTMENT OF TRANSPORTATION

STRUCTURE AND BRIDGE DIVISION

HIGH LOAD MULTI-ROTATIONAL BEARINGS GUIDED EXPANSION

Designed: SBD DIV
Drawn: SBD DIV
Checked:

Date

Plan No. BBD-7A

Sheet No.

bbd7a.dgn

06-14-2010.

BBD-7A

VDOT S&B DIVISION
RICHMOND, VA
STRUCTURAL ENGINEER

STATE	FEDERAL AID ROUTE	FEDERAL AID PROJECT	STATE ROUTE	STATE PROJECT	SHEET NO.
VA.	—				

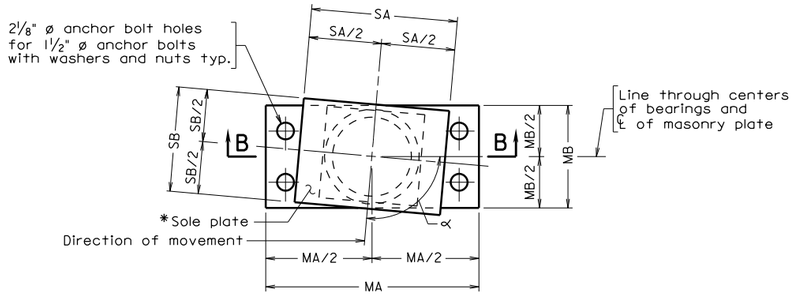

*For orientation of bearing, see Bearing Orientation Plan and Bearing Schedule.

PLAN

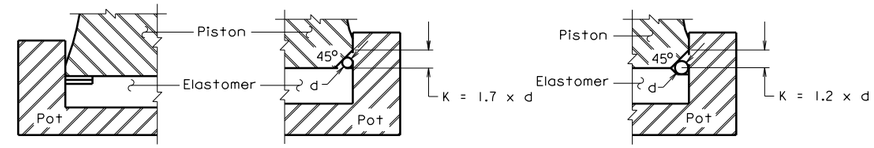

FLAT RING SEAL

ROUND RING IN CHAMFER

ROUND RING RECESSED IN RUBBER

SEALING RING DETAILS

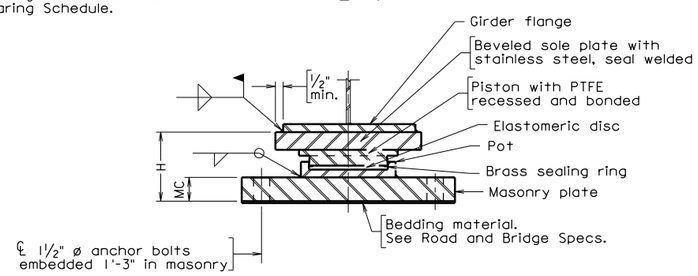

SECTION B-B
NON-GUIDED POT EXPANSION BEARING
TYPE EE

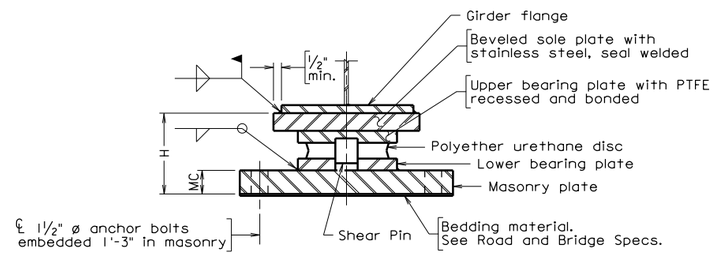

SECTION B-B
NON-GUIDED DISC EXPANSION BEARING
TYPE EE

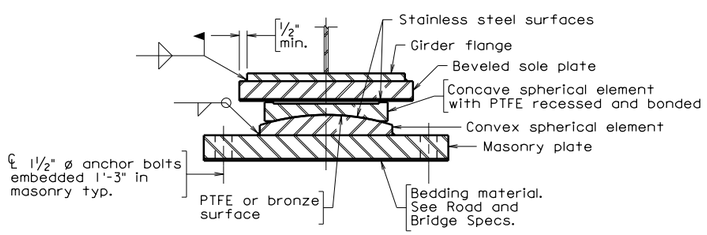

SECTION B-B
NON-GUIDED SPHERICAL EXPANSION BEARING
TYPE EE

Notes:

S.H.C.S. designates socket head cap screws.

Bearings shall conform to Section 408.03(a), High Load Multi-Rotational Bearings, of the Specifications.

To restrict transverse movement, either a guide bar or keyway system shall be used.

Fill holes in masonry plate around anchor bolts with a nonhardening caulking compound or elastic joint sealer.

At no additional cost to the Department, pot, spherical or disc bearings differing in detail from those shown may be supplied provided they meet the requirements of Section 408.03(a) of the Specifications and are approved by the Engineer. Bridge seat elevations are based on Total Bearing Height H in table and shall be adjusted by Contractor based on height of bearing furnished.

Pot, spherical and disc bearings shall not be mixed at the same substructure support.

In lieu of welding, the pot may be recessed into the masonry plate. If this is done, the edge thickness of the masonry plate (MC) shall be increased by the depth of the recess.

Bearing heights are based on the use of pot bearings with flat sealing rings.

The Design Movement is the maximum movement to one side of the bearing centerline. The total movement is twice the Design Movement.

The Horizontal Design Load for Non-Guided Bearings is given solely for the design of the potwall thickness and piston edge widths, spherical radii or shear pin diameter.

Stainless steel; PTFE and bronze surfaces; and surfaces in contact with the elastomeric disc, the polyether urethane disc or the shear pin shall not be painted.

Dimension SA is perpendiclular to the direction of movement and dimension SB is parallel to it.

Disc bearing design:

The instantaneous deflection under total load is limited to a maximum of 10% of the thickness of the unstressed disc.

Deflection caused by rotation is limited to the lesser of 10% of the thickness of the unstressed disc or the instantaneous deflection tion to prevent lift off during rotation.

The strain under total vertical load may not exceed 10%, the strain under rotation alone may not exceed 10% and the total strain due to combined vertical load and rotation may not exceed 20%.

The minimum design rotation is set at 0.025 radians to prevent damage to the rings and leakage of elastomer.

BEARING SCHEDULE

Location	Girder	Type	No. req'd.	Vertical design load kips		Horizontal design load kips	Design movement inches		Sole Plate inches			Sole Plate %	Masonry Plate inches			Total bearing height H inches	Design rotation capacity of bearing Rb radians	Orientation angle α degrees
				Min.	Max.		Long.	Tran.	SA	SB	SC	Grade	MA	MB	MC			

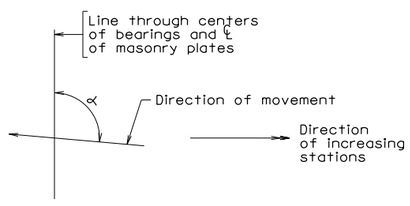

BEARING ORIENTATION PLAN

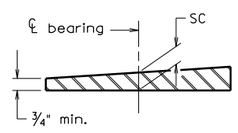

BEVELED SOLE PLATE

Not to scale

©2010, Commonwealth of Virginia

No.	Description	Date

Revisions

COMMONWEALTH OF VIRGINIA
DEPARTMENT OF TRANSPORTATION

STRUCTURE AND BRIDGE DIVISION

HIGH LOAD MULTI-ROTATIONAL BEARINGS
NON-GUIDED EXPANSION

Designed: .....
Drawn: ....S&B DIV
Checked: .....

Date

Plan No. BBD-7B

Sheet No.

bbd7b.dgn

06-14-2010.

BBD-7B

VDOT S&B DIVISION
RICHMOND, VA
STRUCTURAL ENGINEER

NOTES TO DESIGNER:

1. The High Load Multi-Rotational Bearing Standard consists of three standard sheets:

   BBD-6 Fixed Bearings
   BBD-7A Guided Expansion Bearings
   BBD-7B Non-Guided Expansion Bearings

   Normally, a set of plans will have all three standards included. The type of bearing given in the Bearing Schedule shall be FF (Fixed), EF (Guided Expansion), or EE (Non-Guided Expansion).

2. Vertical Design Loads: The minimum vertical design load shall not be less than 20% of the maximum vertical design load. If this minimum load is not maintained on the bearing, it may not function properly and failure may occur.

3. Horizontal Design Loads: The total horizontal force on a row of bearings shall be the larger of:
   a. The total actual horizontal design loads from the superstructure.
   b. Seismic loads. (See AASHTO *Standard Specifications for Highway Bridges,* 16th Edition (1996) 1-A, Seismic Design):
      1. Seismic Performance Category A – a minimum horizontal capacity of 20% of the total vertical dead load of the superstructure.
      2. Seismic Performance Category B – the actual calculated seismic load divided by the response modification factor R.

   Because of the clearances between parts of bearings and the difficulty of aligning them in the field, each bearing shall be designed for the total horizontal load when there are only two bearings resisting the load. If more than two bearings resist the load, use the number of bearings divided by two and round down. The horizontal design load on an individual fixed or guided expansion bearing shall be computed as the total horizontal force in a direction on a row of bearings but not less than 10% of the maximum vertical design load of the bearing. Frictional resistance shall be neglected when calculating the horizontal design load. If a row of bearings consists of two guided bearings which allow longitudinal movement and all the rest are unguided expansion bearings, then each of the two guided bearings would be designed to resist the total transverse horizontal load (wind, centrifugal, thermal, seismic etc.) from the superstructure. If a row of bearings consists of two fixed bearings and all the rest are guided bearings which allow transverse movement, then each of the two fixed bearings would resist the total transverse horizontal force and the total longitudinal force would be resisted by the number bearings divided by two and rounded down. The minimum horizontal design load for an unguided expansion bearing shall be equal to 10% of the maximum vertical design load of the bearing. This provides the design load for the pot and piston. It does not mean that the sliding surface must be able to transmit this much force or that stops have to be provided to limit movement.

4. Loads given in the Bearing Schedule shall be the maximum loads resulting from the various group load combinations divided by the percentage of the basic unit stress allowed for that group load combination. Therefore, if the Horizontal Design Load is from a Group III loading, the load would be divided by 1.25 before entering it into the Bearing Schedule. Seismic loads are divided by 1.5.

NOTES TO DESIGNER (cont'd):

5. The minimum design rotational capacity of the bearing (Rb) is the actual design rotation of the structure (Rs) plus 0.02 radians construction tolerance (Rc). The actual design rotation of the structure (Rs) shall not be less than 0.01 radians. Therefore, Rb $\geq$ 0.03 radians.

6. The installed alignment of bearing guiding systems relative to the anticipated movement direction of the structure should be carefully considered to avoid bearing guide system failure. Special studies or designs may be required on curved or skewed structures to ensure correct installation. The STAAD-III/ISDS finite element computer program may be used with its thermal load case for this purpose. Generally, movements radiate away from points of fixity. The proper alignment of the guided bearings shall be shown in the plans.

7. Transverse rows of bearings should have two fixed bearings with the remainder guided expansion or two guided expansion bearings with the remainder unguided expansion. The two fixed or guided expansion bearings should be adjacent to each other. On curved structures with steel pier caps supported by two HLMR bearings, the fixed bearing at the pier cap should be on the outside of the curve.

8. The standard drawings are not to be used without referring to Specifications Section 408.03(a), High Load Multi-Rotational Bearings, for design criteria.

9. For large diameter bearings or for bearings with large movements, multiple pairs of bearing stiffeners may be required to insure uniform distribution of the load to the bearing.

10. When setting sole plate width, do not set minimum width based entirely on girder flange. The sole plate is set perpendicular to the direction of movement and may not be perpendicular to the girder. The sole plate width needs to be checked for this case.

11. Heights of bearings given in manufacturers' literature may not be accurate since they are generally designed for less than 0.03 radians rotation. Adjust the manufacturer's height by the difference in its rotation capacity and your rotation capacity times the radius of the elastomer.

12. A copy of any design calculations for HLMR bearings furnished by a fabricator should be provided to Structure and Bridge Division to the attention of the project designer. The design calculations should include an example of the formulas and theories used and not merely computer output listing final dimensions.

13. Always provide bridge seat reinforcement beneath High Load Multi-Rotational Bearings.

14. Anchor bolts must be located so that the nuts may be put on with the whole bearing (including sole plate) in place. The specifications do not allow the Contractor to disassemble the bearing in order to put the nuts on the bolts.

15. On expansion bearings, the dimension SA is always perpendicular to the direction of movement and dimension SB is always parallel to the direction of movement.

NOTES TO DESIGNER (cont'd):

16. Refer to the top figure on Sheet 7 and the following instructions as an example for determining the horizontal design loads for the bearings:

    V = maximum vertical design load on the bearing being designed
    HT = total normal transverse loads (wind, centrifugal, etc.)
    HL = total normal longitudinal loads (wind, traction, etc.)
    ST = total transverse seismic load defined in 3b.
    SL = total longitudinal seismic load defined in 3b.
    N = number of bearings capable of resisting the horizontal force in a given direction
    INT = integer

    a. At the abutments, each NE bearing would be designed for a horizontal force of:

       O.IV

    b. At the abutments, each GEL bearing would be designed for a horizontal force equal to the larger of:

       O.IV or HT or ST

    c. At the pier, each GET bearing would be designed for a horizontal force equal to the larger of:

       O.IV or HL/INT(N/2) or SL/INT(N/2)

    d. At the pier, each F bearing would be designed for a horizontal force equal to the larger of:

       $\sqrt{((HL/INT(N/2))^2 + HT^2)}$ or SL/INT(N/2) + 0.3ST or 0.3SL/INT(N/2) + ST

NOTES:

When comparing loads to determine the maximum, make the proper reduction for group load combinations.

Longitudinal horizontal loads not resisted by bearings at one substructure element will be carried by the bearings at other substructure elements.

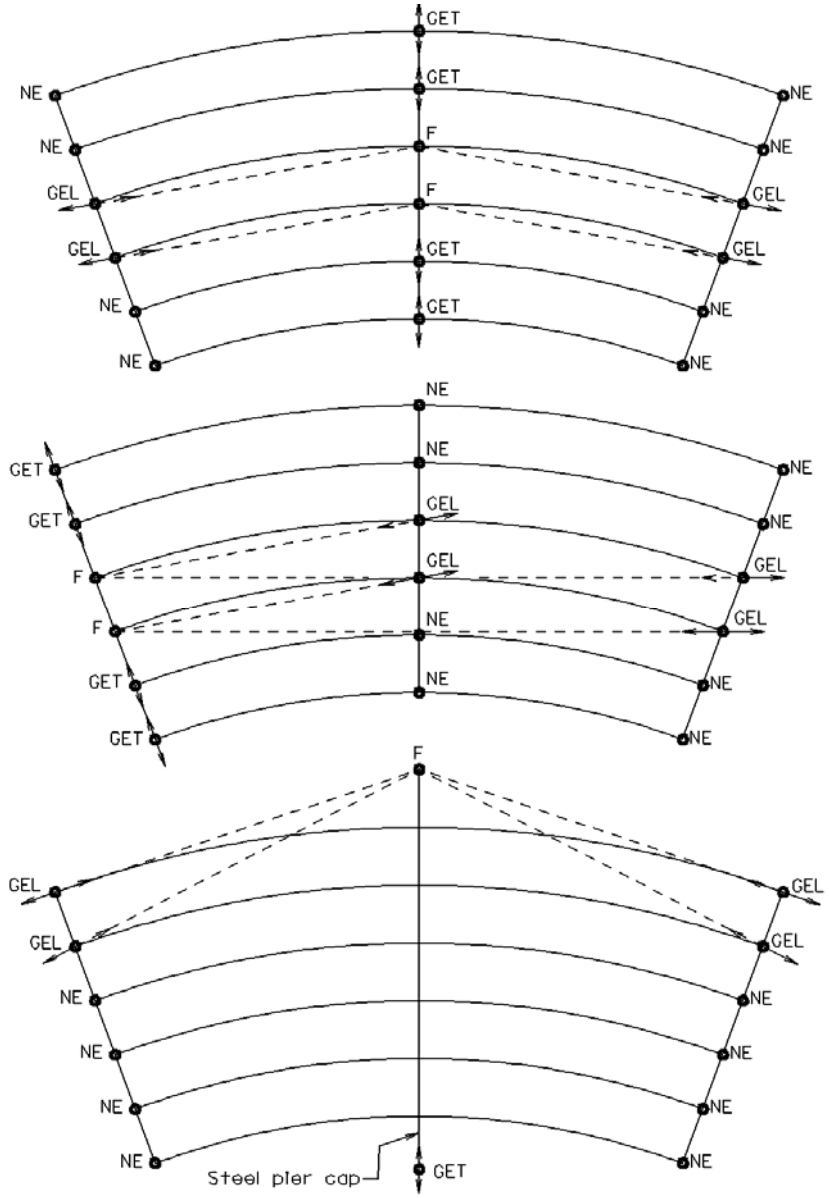

- • - Bearing Location
- F - Fixed Bearing
- GET - Guided Expansion Transverse
- GEL - Guided Expansion Longitudinal
- NE - Nonguided Expansion
- → - Direction of Movement

Notes: Individual orientation of guided bearings to be shown in the plans.
Details only apply to bridges with radial supports

EXPANSION OF CURVED GIRDER BRIDGES USING HLMR BEARINGS

STANDARD BBD-6/7A AND 7B: NOTES TO DESIGNER	VOL. V - PART 3 DATE: 31Aug2007 SHEET 7 of 7 FILE NO. BBD-6/7A/7B-7

STATE	FEDERAL AID ROUTE	FEDERAL AID PROJECT	STATE ROUTE	STATE PROJECT	SHEET NO.
VA.	—				

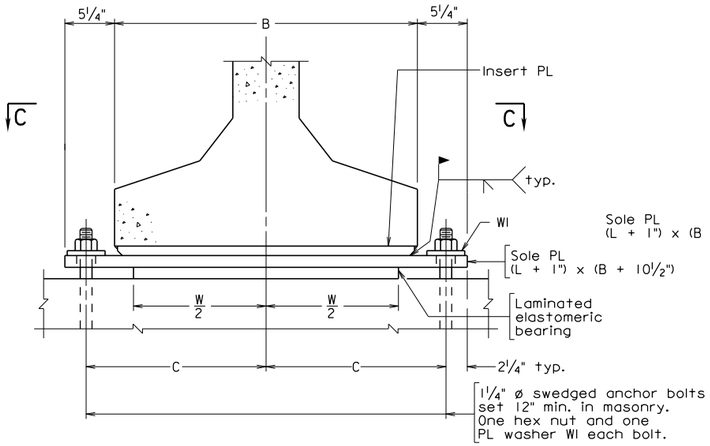

SECTION A-A

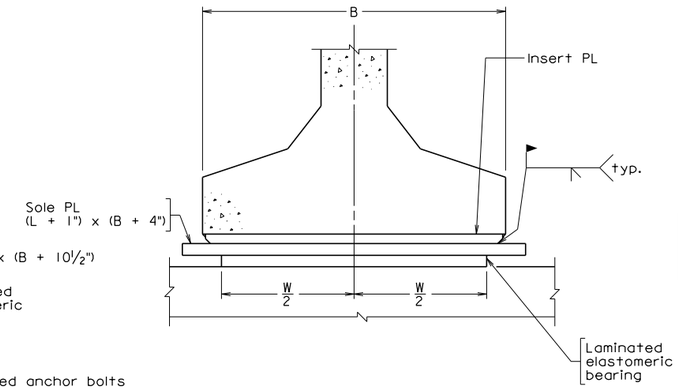

SECTION B-B

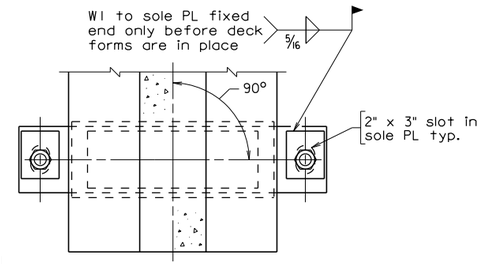

SECTION C-C

Notes:

Material: Elastomer - 50 durometer hardness.
Shim - ASTM A36 or A1011 mild steel.

Elastomeric bearings shall be molded as a single unit.

Bevel sole plates to grade shown in table. Minimum ¾" thickness.

Insert plate shall provide uniform bearing over its entire contact area. For insert plate details, see sheet __.

In welding insert plate to sole plate, ample time shall be allowed between weld passes to prevent heat damage to the concrete, sole plate and elastomeric pad. Elastomer shall not be subjected to temperatures higher than 400°F.

For closure diaphragm details, see sheet __.

For designation of fixed or expansion bearings, see elevation view on title sheet(s).

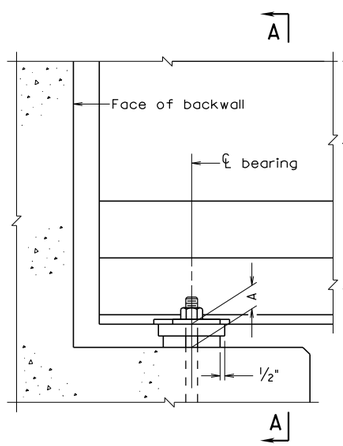

ABUTMENT ELEVATION

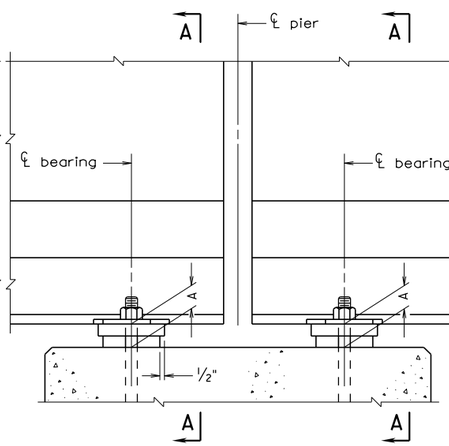

PIER ELEVATION
SIMPLE SPANS

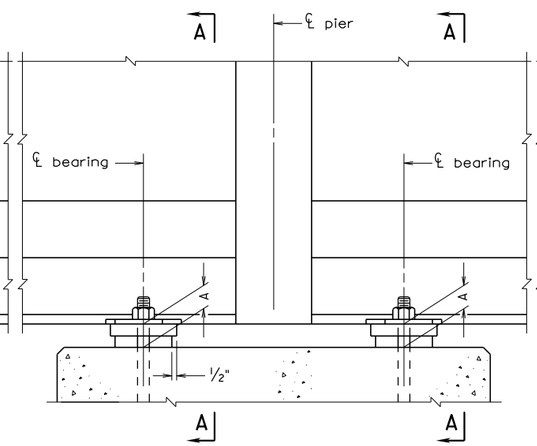

PIER ELEVATION
EXPANSION BEARING
CONTINUOUS SPANS

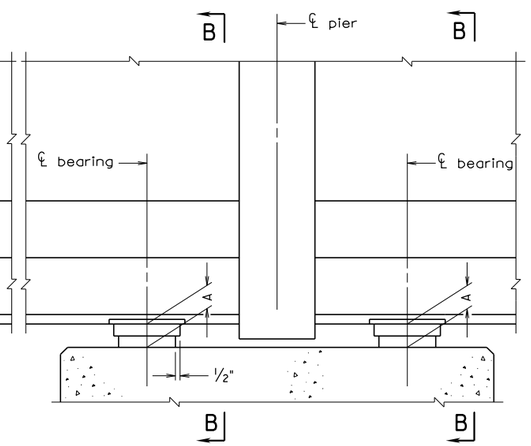

PIER ELEVATION
FIXED BEARING
CONTINUOUS SPANS

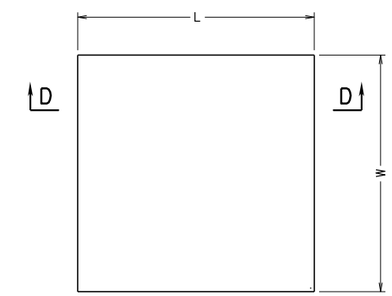

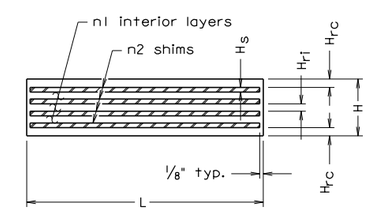

SECTION D-D

LAMINATED ELASTOMERIC BEARING

Span	Abut.	Pier	Beam Type	A	Laminated Elastomeric Bearing W	L	H	H_{rc}	n1 @ H_{ri}	n2 @ H_s	Grade %	Total Load (kips)

All dimensions in table are in inches.

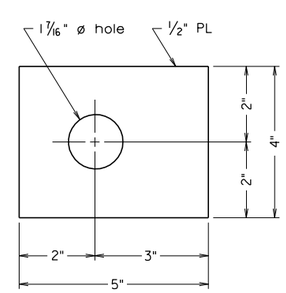

WASHER WI

Beam Type	B	C
II	1'-6"	12"
III	1'-10"	1'-2"
IV	2'-2"	1'-4"
V	2'-4"	1'-5"
VI	2'-4"	1'-5"
pcbt-series	2'-8"	1'-7"

Not to scale

© 2012, Commonwealth of Virginia

No.	Description	Date

Revisions

COMMONWEALTH OF VIRGINIA
DEPARTMENT OF TRANSPORTATION

STRUCTURE AND BRIDGE DIVISION

PRESTRESSED BEAM BEARING DETAILS

Designed: S&B DIV
Drawn:
Checked:

Date

Plan No. BBD-8

Sheet No.

Sealed and Signed by:
Julius F.J. Volgyi Jr.
Lic. No. 010487
On the date of
Aug. 7, 2012

A copy of the original sealed and signed standard drawing is on file in the Central Office.

VDOT S&B DIVISION
RICHMOND, VA
STRUCTURAL ENGINEER

08-07-2012

BBD-8

bbd-8.dgn

BEARING DETAILS

REINFORCED LAMINATED ELASTOMERIC BEARING PADS
PRESTRESSED CONCRETE BEAMS

NOTES TO DESIGNER:

Standard is for use with prestressed concrete beams.

Use LAMPAD computer program to design the laminated elastomeric bearings. (LAMPAD program for use by in-house design staff only.)

Bearings may be fixed by welding washer WI to the sole plate (see Section C-C).

Do not bevel the sole plate unless the Grade % of the bridge exceeds the Grade % printed in the LAMPAD* output. Instead enter 0 (zero) in the table for the Grade %. Round off grade to two decimal places. The grade is the grade of the chord between the bearings at opposite ends of a beam.

On vertical curves with skewed substructures, bearings may be grouped together by average Grade % as long as the grade does not vary by more than 0.125% in any group.

ADD THE FOLLOWING NOTES, DIMENSIONS, DETAILS, ETC. TO STANDARD:

TABLE:

Complete table with data as applicable: Span (designation), Abutment (A or B normally), Pier (designation), Beam Type (II thru VI or PCBT (Bulb-T)), and output data from LAMPAD computer program.

“A” is dimension on centerline bearing. Minimum height is 2”. Minimum dimension may be varied to suit grade by increasing the sole plate thickness. Minimum thickness of sole plate is $^{3}/_{4}$".

NOTES:

Add sheet number to “For closure diaphragm details, see sheet “ if prestressed beam is designed for continuity (continuous for live load, etc.) or delete if not applicable.

STATE	FEDERAL AID ROUTE	FEDERAL AID PROJECT	STATE ROUTE	STATE PROJECT	SHEET NO.
VA.	—				

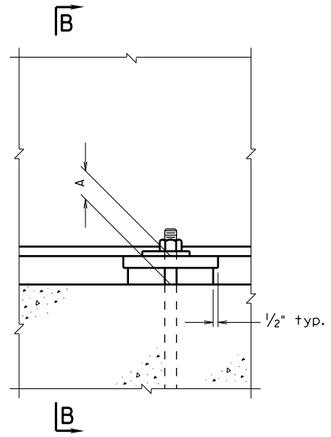

EXPANSION ASSEMBLY

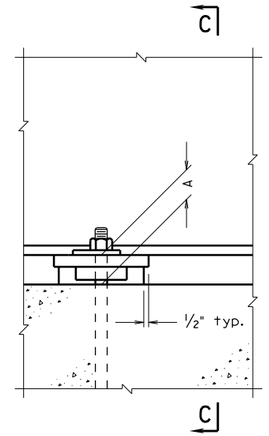

FIXED ASSEMBLY

Notes:

Material: Elastomer - 50 durometer hardness.
Shim - ASTM A36 or A1011 mild steel.

Bevel sole plates to grade shown. Minimum sole plate thickness is 3/4". Plates shall not be painted on the surface in contact with the elastomeric bearing.

Elastomeric bearings shall be molded as a single unit.

* Weld shall terminate 1/4" from edge of sole plate.

For designation of fixed or expansion bearings, see elevation view on front sheet(s).

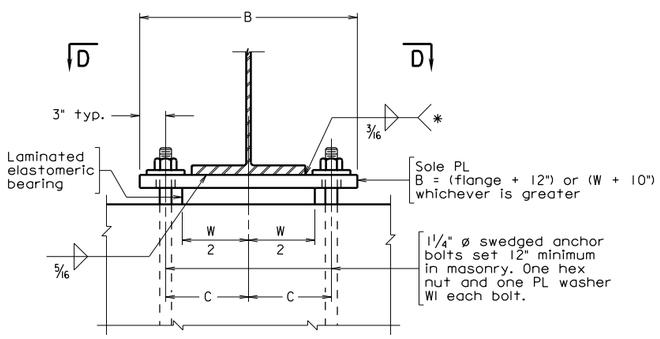

SECTION B-B

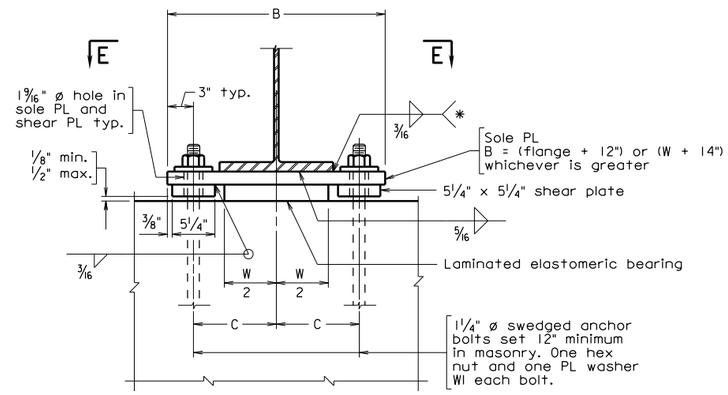

SECTION C-C

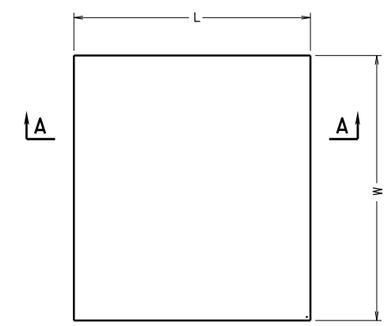

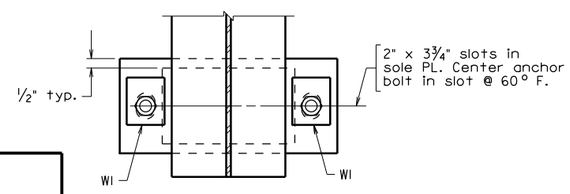

SECTION D-D

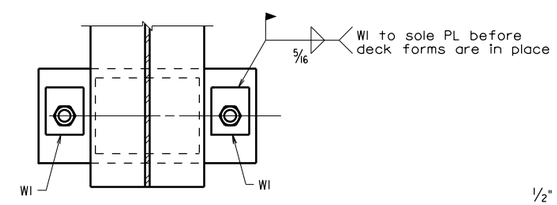

SECTION E-E

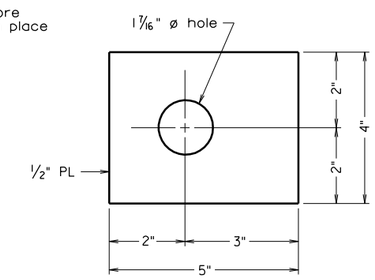

WASHER WI

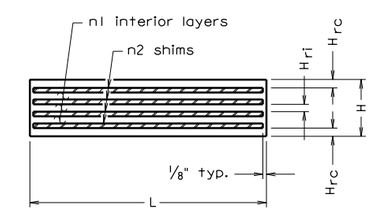

SECTION A-A
LAMINATED ELASTOMERIC BEARING

Span	Abut.	Pier	A	C	Laminated Elastomeric Bearing W	L	H	H_{rc}	n1 @ H_{ri}	n2 @ H_s	Grade %	Total Load (kips)

All dimensions in table are in inches.

Not to scale

©2010, Commonwealth of Virginia

No.	Description	Date

Revisions

COMMONWEALTH OF VIRGINIA
DEPARTMENT OF TRANSPORTATION

STRUCTURE AND BRIDGE DIVISION

BEARING DETAILS

Designed: .....
Drawn: ...S&B..DIV
Checked: .....

Date	Plan No.	Sheet No.
	BBD-9	

VDOT S&B DIVISION
RICHMOND, VA
STRUCTURAL ENGINEER

BBD-9 06-14-2010 bbd9.dgn

BEARING DETAILS

LAMINATED ELASTOMERIC BEARING PADS
STEEL BEAMS/GIRDERS

NOTES TO DESIGNER:

Standard is for use with steel beams/girders.

Use LAMPAD computer program to design the laminated elastomeric bearings. (LAMPAD program for use by in-house design staff only.)

Bearings may be fixed by welding washer WI to the sole plate (see Section E-E).

At fixed bearings, anchor bolts must be designed for moment and shear. Therefore, either larger or additional anchor bolts may be required.

Do not bevel the sole plate unless the Grade % of the bridge exceeds the Grade % printed in the LAMPAD* output. Instead enter 0 (zero) in the table for the Grade %. Round off grade to two decimal places. For simple spans, the grade is the grade of the chord between the bearings at opposite ends of a beam/girder. For continuous spans, the grade is the inclination of the underside of the beam/girder to the horizontal under full permanent load. As an approximation for continuous spans, calculate elevations at points 5 feet on either side of bearing, carrying elevation to three decimal places. Calculate % grade from these two points.

On vertical curves with skewed substructures, bearings may be grouped together by average Grade % as long as the grade does not vary by more than 0.125% in any group.

ADD THE FOLLOWING NOTES, DIMENSIONS, DETAILS, ETC. TO STANDARD:

TABLE:

Complete table with data as applicable: Span (designation), Abutment (A or B normally), Pier (designation), and output data from LAMPAD computer program.

“A” are dimensions on centerline bearing. Minimum height is 2”. Minimum dimension may be varied to suit grade by increasing the sole plate thickness. Minimum thickness of sole plate is $^{3}/_{4}$".

STATE	FEDERAL AID ROUTE	FEDERAL AID PROJECT	STATE ROUTE	STATE PROJECT	SHEET NO.
VA.	—				

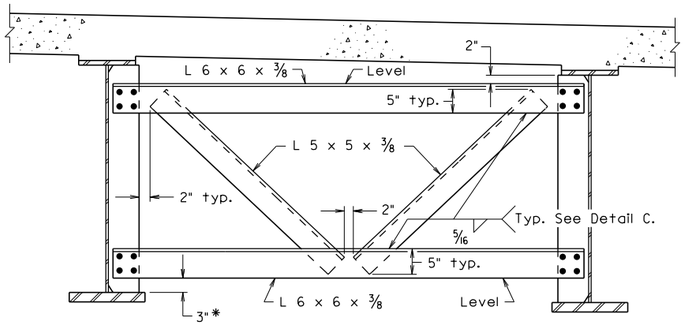

CROSS FRAME - CF1
* Dimension shall be 6" at piers

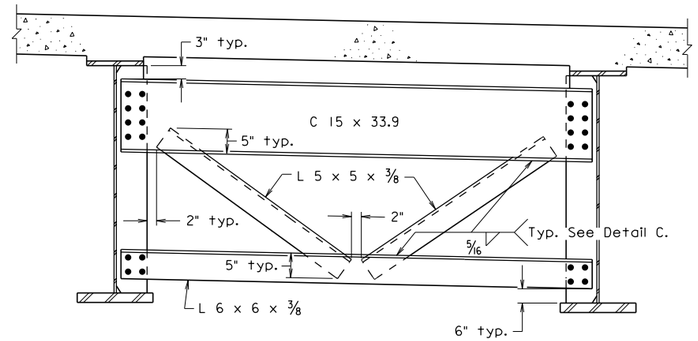

CROSS FRAME - CF2

Note:

All welding of structural steel and quality control inspection of welds, including field welding and quality control inspection of field welding, shall be the responsibility of the Contractor in accordance with Section 407.04(I) of the Specifications.

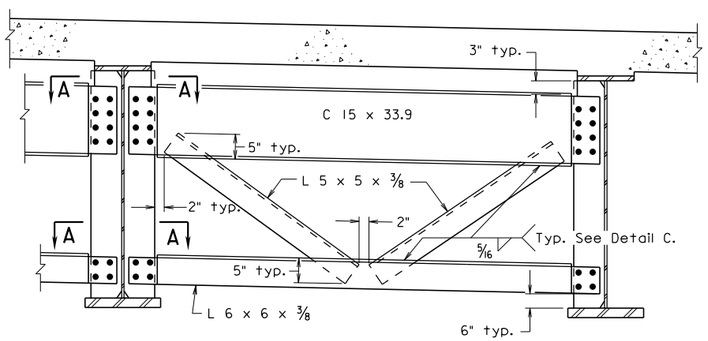

CROSS FRAME - CF3

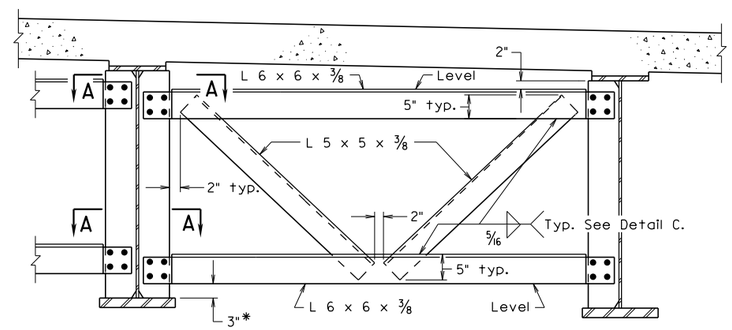

CROSS FRAME - CF4
* Dimension shall be 6" at piers

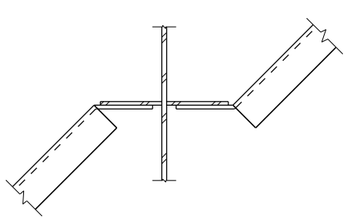

SECTION A-A

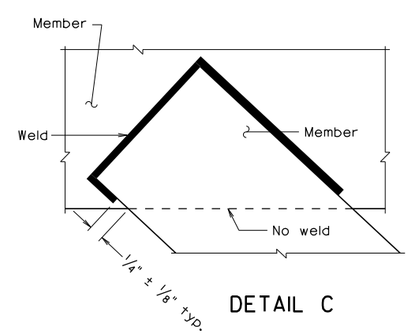

DETAIL C

Not to scale

©2013, Commonwealth of Virginia

bcf4.dgn

03-27-2013

BCF-4

Sealed and Signed by:
Julius F.J. Volgyi Jr.
Lic. No. 010487
On the date of
March 27, 2013

A copy of the original sealed and signed standard drawing is on file in the Central Office.

VDOT S&B DIVISION
RICHMOND, VA
STRUCTURAL ENGINEER

No.	Description	Date
	Revisions	

COMMONWEALTH OF VIRGINIA
DEPARTMENT OF TRANSPORTATION

STRUCTURE AND BRIDGE DIVISION

CROSS FRAME DETAILS

Designed: S&B DIV
Drawn: S&B DIV
Checked: S&B DIV

Date

Plan No. BCF-4

Sheet No.

NOTES TO DESIGNER:

For use of standard cross frames (diaphragms), see Manual of the Structure and Bridge Division, Volume V, Part 2, Chapter 11. Use V-cross frames up to a maximum angle of 60°.

Indicate on framing plan which type(s) are used, e.g., Typical Cross Frame CF2 at (near) Abutments, or Typical Intermediate Cross Frame CF1.

Cross Frames detailed on standard are as follows:

CF1: V-Type, Intermediate Diaphragm, Normal (0° Skew). Used also at piers for continuous girders.

CF2: V-Type, End Diaphragm, Normal (0° Skew)

CF3: V-Type, End Diaphragm, Skewed

CF4: V-Type, Intermediate Diaphragm, Skewed. Used at piers for continuous girders.

ADD THE FOLLOWING NOTES, DIMENSIONS, DETAILS, ETC. TO STANDARD:

None

STATE	FEDERAL AID ROUTE	FEDERAL AID PROJECT	STATE ROUTE	STATE PROJECT	SHEET NO.
VA.	—				

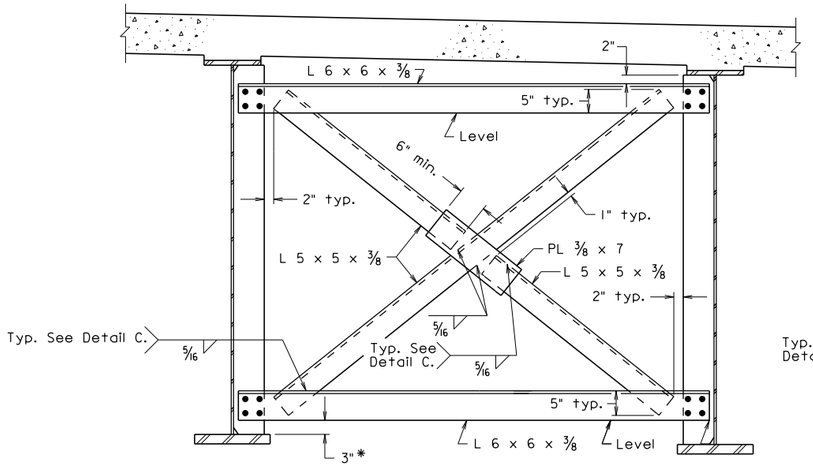

CROSS FRAME - CF5

* Dimension shall be 6" at piers

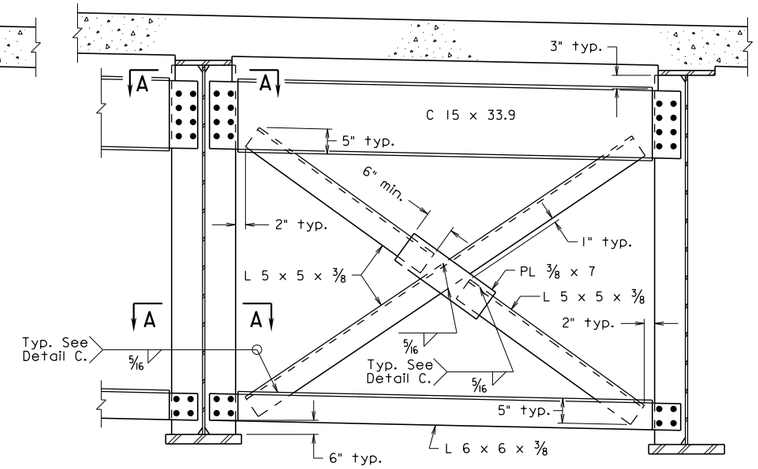

CROSS FRAME - CF7

Note:

All welding of structural steel and quality control inspection of welds, including field welding and quality control inspection of field welding, shall be the responsibility of the Contractor in accordance with Section 407.04(l) of the Specifications.

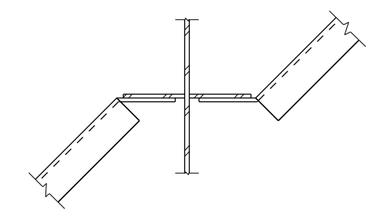

SECTION A-A

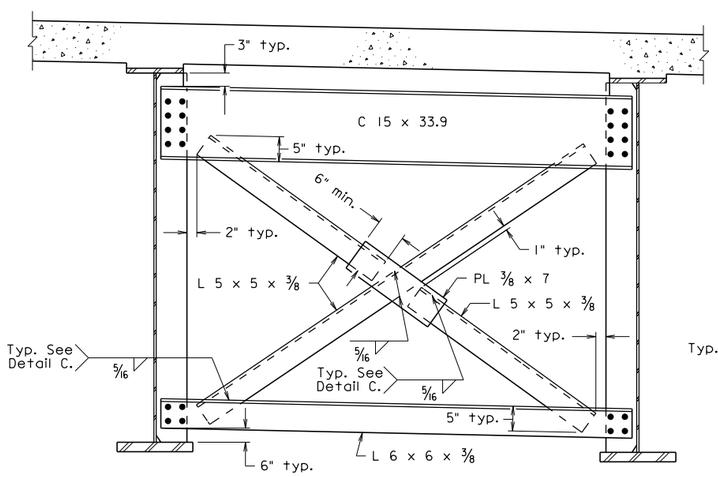

CROSS FRAME - CF6

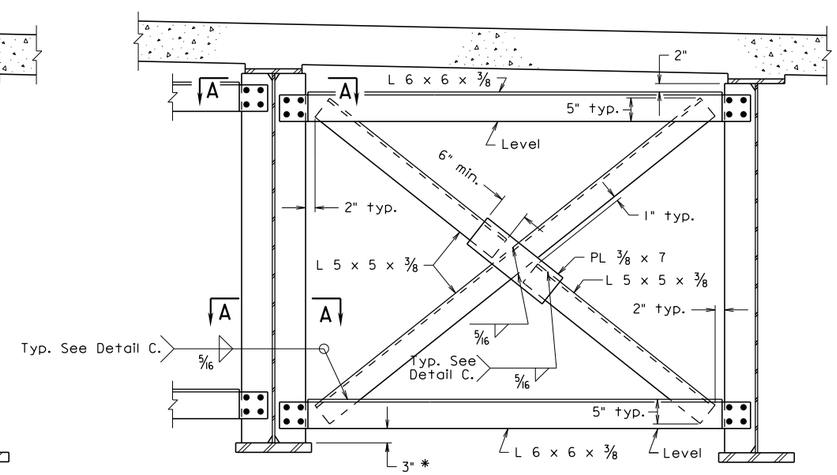

CROSS FRAME - CF8

* Dimension shall be 6" at piers

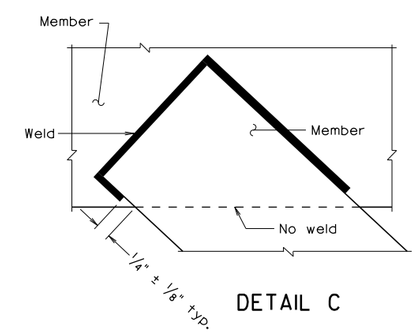

DETAIL C

bcf5.dgn

03-27-2013

BCF-5

Sealed and Signed by:
Julius F.J. Volgyi Jr.
Lic. No. 010487
On the date of
March 27, 2013

A copy of the original sealed and signed standard drawing is on file in the Central Office.

VDOT S&B DIVISION
RICHMOND, VA
STRUCTURAL ENGINEER

Not to scale

©2013, Commonwealth of Virginia

No.	Description	Date
	Revisions	

COMMONWEALTH OF VIRGINIA
DEPARTMENT OF TRANSPORTATION

STRUCTURE AND BRIDGE DIVISION

CROSS FRAME DETAILS

Designed: S&B DIV
Drawn: S&B DIV
Checked: S&B DIV

Date

Plan No. BCF-5

Sheet No.

NOTES TO DESIGNER:

For use of standard cross frames (diaphragms), see Manual of the Structure and Bridge Division, Volume V, Part 2, Chapter 11. Use V-cross frames up to a maximum angle of 60°.

Indicate on framing plan which type(s) are used, e.g., Typical Cross Frame CF2 at (near) Abutments, or Typical Intermediate Cross Frame CF1.

Cross Frames detailed on standard are as follows:

CF5: X-Type, Intermediate Diaphragm, Normal (0° Skew), Used also at piers for continuous girders.

CF6: X-Type, End Diaphragm, Normal (0° Skew)

CF7: X-Type, End Diaphragm, Skewed.

CF8: X-Type, Intermediate Diaphragm, Skewed. Used at piers for continuous girders.

ADD THE FOLLOWING NOTES, DIMENSIONS, DETAILS, ETC. TO STANDARD:

None

STATE	FEDERAL AID ROUTE	FEDERAL AID PROJECT	STATE ROUTE	STATE PROJECT	SHEET NO.
VA.	—				

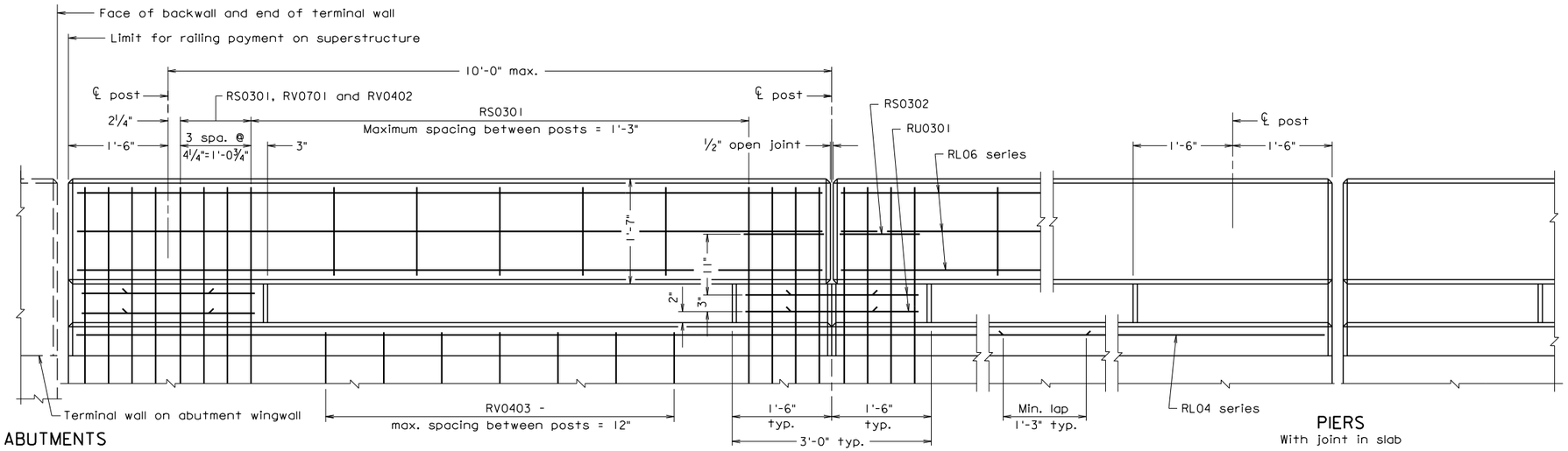

TYPICAL ELEVATION

Notes:

All reinforcing bars shall be Corrosion Resistant Reinforcing Steel, Class __.

RL0401 bars are not required for deck slabs and RU0502 bars are not required for slab spans.

Barrier delineator size, color, and spacing to be in accordance with the Specifications. Cost of delineator to be included in the price bid for railing. Reflective surface of barrier delineator, in all instances, to be facing oncoming traffic.

The Contractor shall determine all details necessary for installation.

All bevels for concrete on this sheet shall be ¾". Rounded edges with 1" radius may be used in lieu of bevels along top of railing.

All concrete shall be Class A4.

Bid item for railing shall include concrete noted in plans and reinforcing steel indicated in Reinforcing Steel Schedule.

Plan dimensions shown on this sheet and terminal wall sheet are measured in the respective horizontal and vertical planes. The reinforcing steel shown has been detailed based on standard ¼" per foot cross slope. The Contractor shall adjust the reinforcing steel as required for other cross slopes.

For details and reinforcing steel schedule of terminal wall, see sheet __.

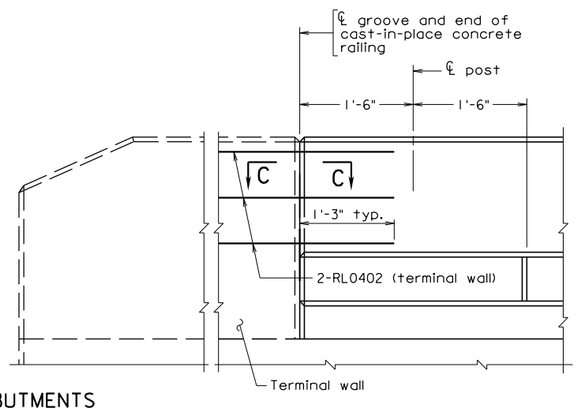

PART ELEVATION
Terminal Wall on Superstructure

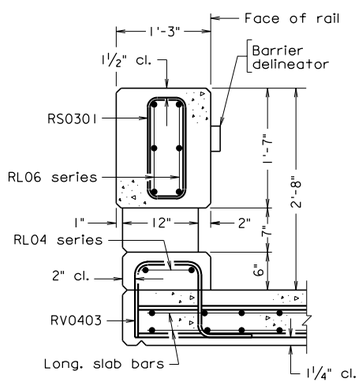

TYPICAL SECTION BETWEEN POSTS

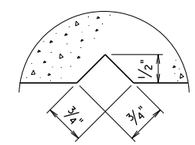

SECTION C-C
both sides of curb
Not to scale
Groove detail for or joint

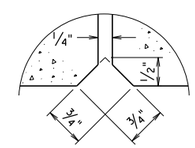

SECTION D-D
Not to scale
Deflection joint detail for both sides of rail and post

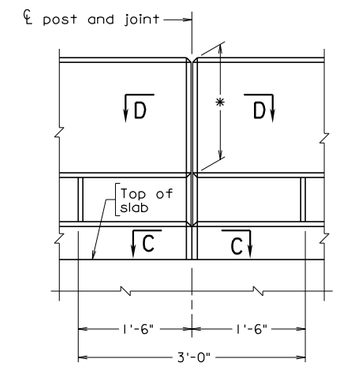

PIERS
Slab continuous over pier
* Open deflection joint 1'-7" deep

REINFORCING STEEL SCHEDULE

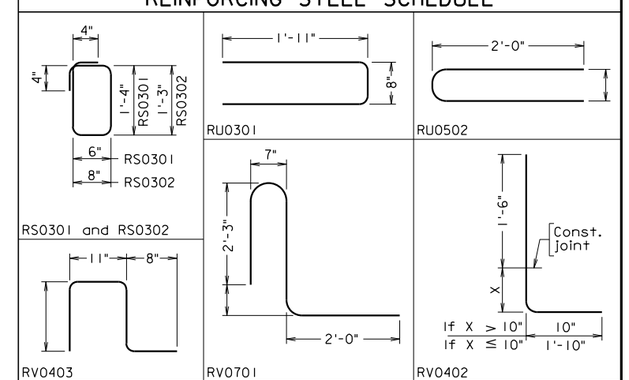

Mark	No.	Size	Pin ø	Length	Location
RS0301	·	#3	2¼"	3'-11"	Rail
RS0302	·	#3	2¼"	4'-1"	Posts
RU0301	·	#3	2¼"	4'-4"	Posts
RU0502	·	#5	——	·	Slab at posts (Deck Slabs)
RV0701	·	#7	5¼"	·	Posts
RV0402	·	#4	3"	·	Posts
RV0403	·	#4	2"	·	Curb
RL0401	·	#4	——	6'-6"	Slab at posts (Slab Spans)
RL04	·	#4	——	·	Curb
RL06	·	#6	——	·	Rail

Dimensions in bending diagram are out-to-out of bars, except as shown.

Gross concrete quantities above roadway slab :
Railing : C.Y. = Lin. ft. x 0.103

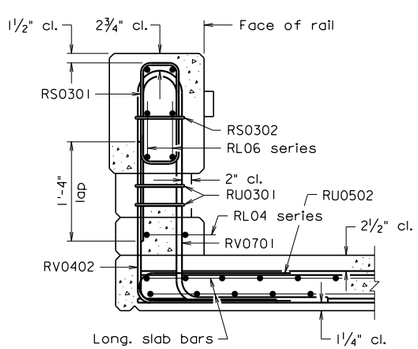

DECK SLABS

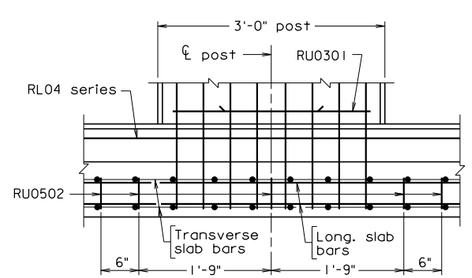

ELEVATION SHOWING RU0502 PLACEMENT DECK SLABS

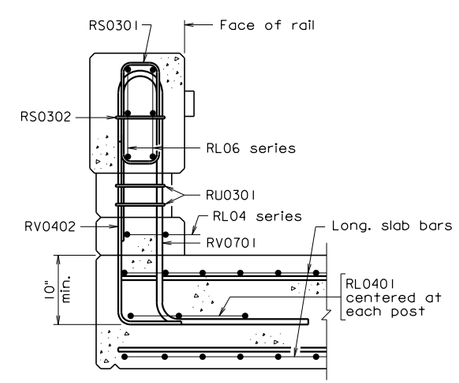

SLAB SPANS

Scale: 1" = 1'-0" unless otherwise shown.

© 2012, Commonwealth of Virginia

No.	Description	Date

Revisions

COMMONWEALTH OF VIRGINIA
DEPARTMENT OF TRANSPORTATION

STRUCTURE AND BRIDGE DIVISION

CAST-IN-PLACE CONCRETE RAILING 32" KANSAS CORRAL W/ CURB

Designed: S&B..DIV	Date	Plan No.	Sheet No.
Drawn: ....S&B..DIV		BCR-3	
Checked: S&B..DIV			

12-14-2012

bcr3.dgn

Sealed and Signed by:
Julius F.J. Volgyi Jr.
Lic. No. 010487
On the date of December 14, 2012

A copy of the original sealed and signed standard drawing is on file in the Central Office.

VDOT S&B DIVISION
RICHMOND, VA
STRUCTURAL ENGINEER

BCR-3

CAST-IN-PLACE CONCRETE RAILING
KANSAS CORRAL

2'-8" HEIGHT WITH CURB

NOTES TO DESIGNER:

The Kansas Corral with a railing height of 2'-8" and with curb section has been crash tested for TL-4 (TL = test level). The original rail has been modified as follows: rail width increased from 12" to 15" and the width of the post increased from 10" to 12". Dimensions were changed to allow for additional reinforcement cover. This rail is for use as a traffic barrier and shall not be used for sidewalk applications.

Use standard only for structures that require increased hydraulic opening and/or visibility and when approach roadway has curb. Standard is not intended to be used with sidewalk curb(s). Standard may be used for deck slab on stringers and concrete slab spans having a minimum slab thickness of 15".

Select the appropriate terminal wall standard (BCR-6 to BCR-9) to be included in the plans when using this standard.

It is the Contractor's responsibility to determine the number of reinforcing bars required as well as any other details or dimensions. Therefore, these items are to be left blank in the Reinforcing Steel Schedule.

If bituminous overlay is placed, dimensions and rebars must be adjusted as noted below.

ADD THE FOLLOWING NOTES, DIMENSIONS, DETAILS, ETC. TO STANDARD:

TYPICAL SECTION BETWEEN POSTS:

For projects with bituminous overlay, modify vertical dimensions (6" curb and 2'-8" railing height) so that these dimensions will be established from top of overlay surface.

NOTES:

Complete first note by adding the Class I, II or III of corrosion resistant reinforcing steel required. For additional information on corrosion resistant reinforcing steel (CRR), see Structure and Bridge Division Memorandum (current IIM-S&B-81).

Complete sheet no. for terminal wall.

REINFORCING STEEL SCHEDULE:

Add dimension and lengths for rebars RV0701, RV0402, RV0403 and RU0502.

For projects with bituminous overlay, modify rebar lengths to allow for dimension changes.

STATE	FEDERAL AID ROUTE	FEDERAL AID PROJECT	STATE ROUTE	STATE PROJECT	SHEET NO.
VA.	—				

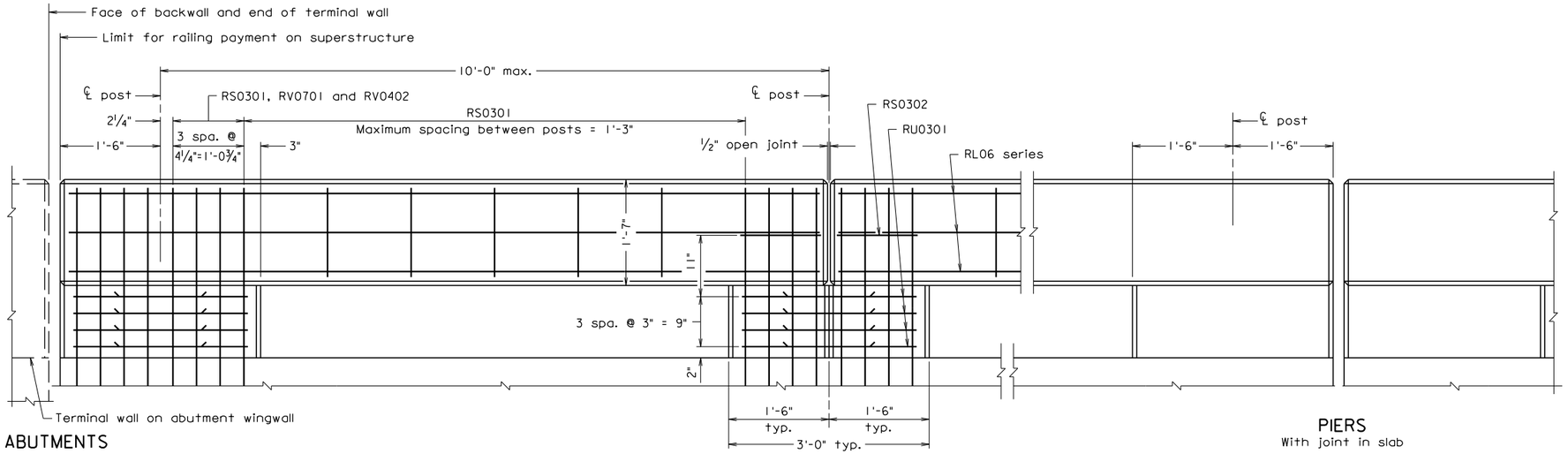

ABUTMENTS

TYPICAL ELEVATION

PIERS
With joint in slab

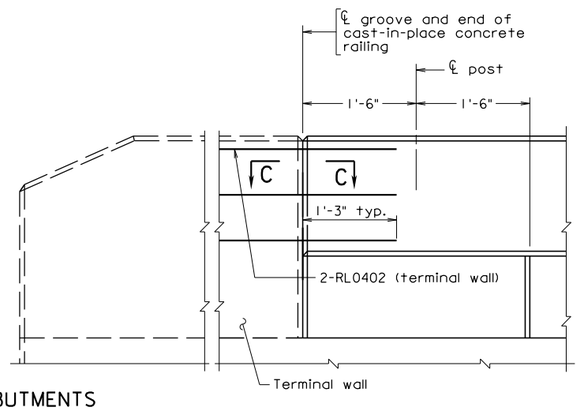

ABUTMENTS

PART ELEVATION
Terminal Wall on Superstructure

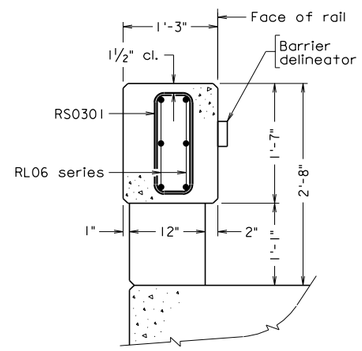

TYPICAL SECTION BETWEEN POSTS
Reinforcing steel on deck not shown

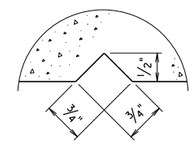

SECTION C-C
both sides of post
Not to scale
Groove detail for or joint

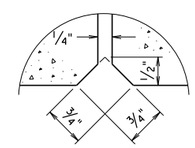

SECTION D-D
Not to scale
Deflection joint detail for both sides of rail and post

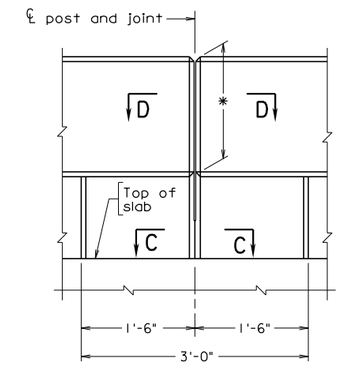

PIERS
Slab continuous over pier
* Open deflection joint 1'-7" deep

Notes:

All reinforcing bars shall be Corrosion Resistant Reinforcing Steel, Class __.

RL0401 bars are not required for deck slabs and RU0502 bars are not required for slab spans.

Barrier delineator size, color, and spacing to be in accordance with the Specifications. Cost of delineator to be included in the price bid for railing. Reflective surface of barrier delineator, in all instances, to be facing oncoming traffic.

The Contractor shall determine all details necessary for installation.

All bevels for concrete on this sheet shall be ¾". Rounded edges with 1" radius may be used in lieu of bevels along top of railing.

All concrete shall be Class A4.

Bid item for railing shall include concrete noted in plans and reinforcing steel indicated in Reinforcing Steel Schedule.

Plan dimensions shown on this sheet and terminal wall sheet are measured in the respective horizontal and vertical planes. The reinforcing steel shown has been detailed based on standard ¼" per foot cross slope. The Contractor shall adjust the reinforcing steel as required for other cross slopes.

For details and reinforcing steel schedule of terminal wall, see sheet __.

REINFORCING STEEL SCHEDULE

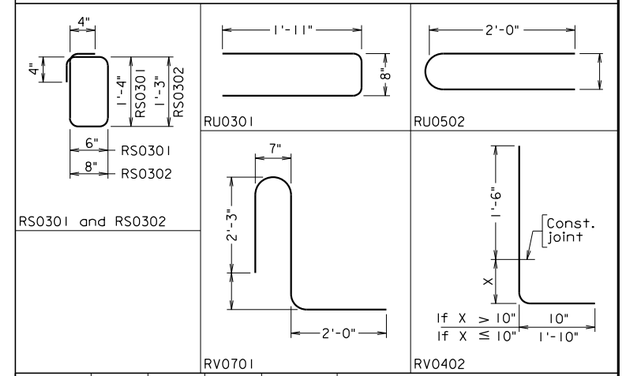

Mark	No.	Size	Pin ø	Length	Location
RS0301	·	#3	2¼"	3'-11"	Rail
RS0302	·	#3	2¼"	4'-1"	Posts
RU0301	·	#3	2¼"	4'-4"	Posts
RU0502	·	#5	——	·	Slab at posts (Deck Slabs)
RV0701	·	#7	5¼"	·	Posts
RV0402	·	#4	3"	·	Posts
RL0401	·	#4	——	6'-6"	Slab at posts (Slab Spans)
RL06	·	#6	——	·	Rail

Dimensions in bending diagram are out-to-out of bars, except as shown.

Gross concrete quantities above roadway slab :
Railing : C.Y. = Lin. Ft. x 0.085

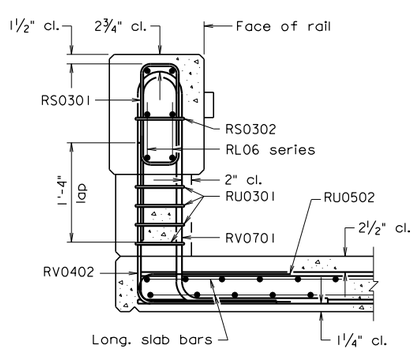

DECK SLABS

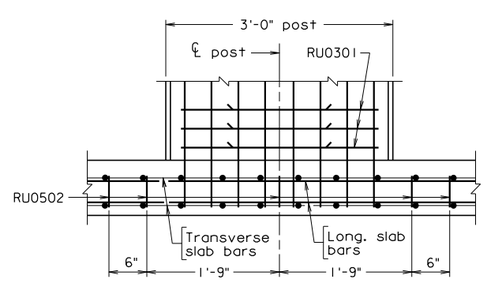

ELEVATION SHOWING RU0502 PLACEMENT DECK SLABS

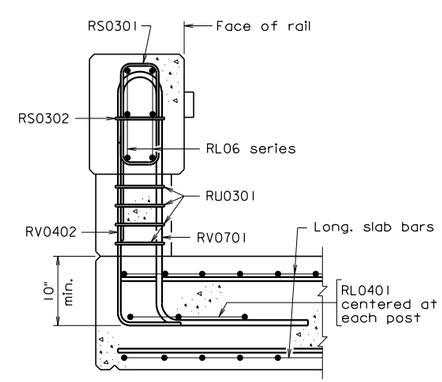

SLAB SPANS

Scale: 1" = 1'-0", unless otherwise shown.

© 2012, Commonwealth of Virginia

No.	Description	Date

Revisions

COMMONWEALTH OF VIRGINIA
DEPARTMENT OF TRANSPORTATION

STRUCTURE AND BRIDGE DIVISION

CAST-IN-PLACE CONCRETE RAILING 32" KANSAS CORRAL W/O CURB

Designed: S&B DIV
Drawn: S&B DIV
Checked: S&B DIV

Date

Plan No. BCR-4

Sheet No.

Sealed and Signed by:
Julius F.J. Volgyi Jr.
Lic. No. 010487
On the date of
December 14, 2012

A copy of the original sealed and signed standard drawing is on file in the Central Office.

VDOT S&B DIVISION
RICHMOND, VA
STRUCTURAL ENGINEER

12-14-2012

bcr4.dgn

BCR-4

CAST-IN-PLACE CONCRETE RAILING
KANSAS CORRAL

2'-8" HEIGHT WITHOUT CURB

NOTES TO DESIGNER:

The Kansas Corral with a railing height of 2'-8" and without curb section has been crash tested for TL-4 (TL = test level). The original rail has been modified as follows: rail width increased from 12" to 15" and the width of the post increased from 10" to 12". Dimensions were changed to allow for additional reinforcement cover. This rail is for use as a traffic barrier and shall not be used for sidewalk applications.

Use standard only for structures that require increased hydraulic opening and/or visibility and when approach roadway has no curb. Standard is not intended to be used with sidewalk curb(s). Standard may be used for deck slab on stringers and concrete slab spans having a minimum slab thickness of 15".

Select the appropriate terminal wall standard (BCR-6 to BCR-9) to be included in the plans when using this standard.

It is the Contractor's responsibility to determine the number of reinforcing bars required as well as any details or dimensions. Therefore, these items are left blank in the Reinforcing Steel Schedule.

If bituminous overlay is placed, dimensions and rebars must be adjusted as noted below.

ADD THE FOLLOWING NOTES, DIMENSIONS, DETAILS, ETC. TO STANDARD:

TYPICAL SECTION BETWEEN POSTS:

For projects with bituminous overlay, modify vertical dimensions 1'-1" and 2'-8" (railing height) so that these dimension will be established from top of overlay surface.

NOTES:

Complete first note by adding the Class I, II or III of corrosion resistant reinforcing steel required. For additional information on corrosion resistant reinforcing steel (CRR), see Structure and Bridge Division Memorandum (current IIM-S&B-81).

Complete sheet no. for terminal wall.

REINFORCING STEEL SCHEDULE:

Add dimension for rebars RV0701, RV0402, and RU0502.

For projects with bituminous overlay, modify rebar lengths to allow for dimension changes.

STATE	FEDERAL AID ROUTE	FEDERAL AID PROJECT	STATE ROUTE	STATE PROJECT	SHEET NO.
VA.	—				

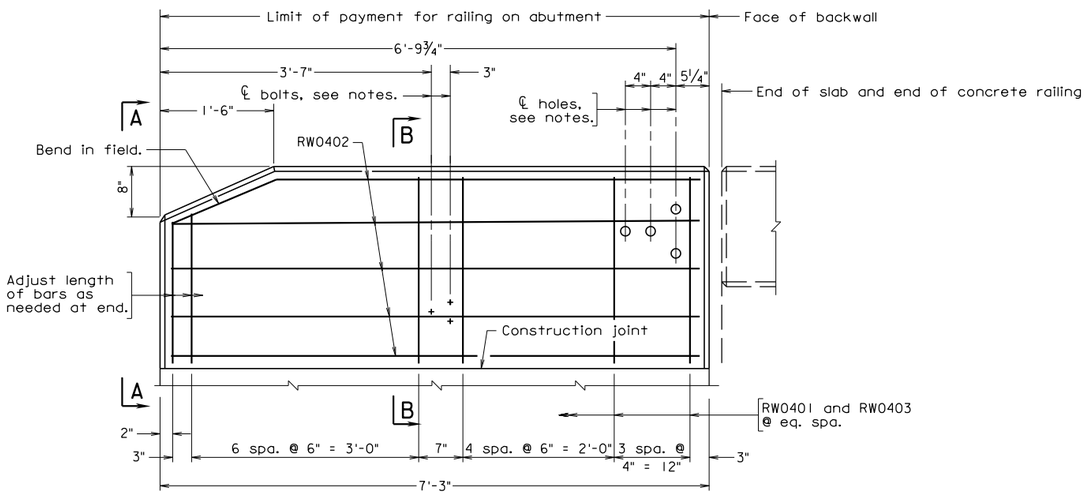

TERMINAL WALL ABUTMENT

ELEVATION

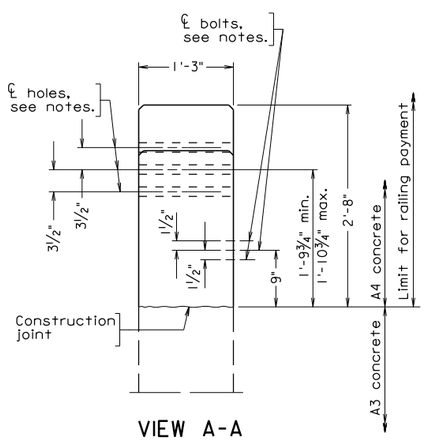

VIEW A-A

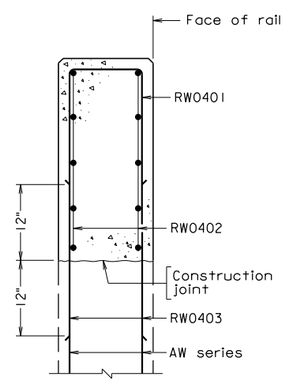

SECTION B-B

Notes:

All bevels for concrete on this sheet shall be ¾". Rounded edges with 1" radius may be used in lieu of bevels along top of rail.

All reinforcing bars shall be Corrosion Resistant Reinforcing Steel, Class __.

Each terminal wall shall be cast as one piece.

The Contractor shall determine all details necessary for installation.

All concrete shall be Class A4.

For details of wingwall below construction joint, see abutment sheets.

Terminal walls are detailed to take guardrail attachment GR-FOA-1.

Holes, where shown, shall be formed with sleeves of 1½" diameter nominal pipe.

Bolts, where shown, shall be ⅝" dia. expansion anchor bolts, 6" long to be drilled and installed when rub rail is attached.

For details and reinforcing steel schedule of cast-in-place concrete railing, see sheet __.

Bid item for terminal wall shall include concrete noted in plans and reinforcing steel indicated in Reinforcing Steel Schedule.

REINFORCING STEEL SCHEDULE

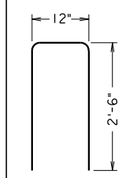

RW0401

Mark	No.	Size	Pin ø	Length	Location
RW0401		#4	3"	5'-10"	Terminal wall
RW0402		#4	—	6'-11"	Terminal wall
RW0403		#4	—	2'-0"	Terminal wall

Dimensions in bending diagram are out-to-out of bars, except as shown.

12-14-2012

bcr6.dgn

Sealed and Signed by:
Julius F.J. Volgyi Jr.
Lic. No. 010487
On the date of
December 14, 2012

A copy of the original sealed and signed standard drawing is on file in the Central Office.

VDOT S&B DIVISION
RICHMOND, VA
STRUCTURAL ENGINEER

BCR-6

Scale: 1" = 1'-0" unless otherwise shown.

©2012, Commonwealth of Virginia

No.	Description	Date
	Revisions	

COMMONWEALTH OF VIRGINIA
DEPARTMENT OF TRANSPORTATION

STRUCTURE AND BRIDGE DIVISION

CAST-IN-PLACE TERMINAL WALL 32" KANSAS CORRAL

Designed: S&B DIV
Drawn: S&B DIV
Checked: S&B DIV

Date

Plan No. BCR-6

Sheet No.

CAST-IN-PLACE CONCRETE RAILING
KANSAS CORRAL (2'-8")

TERMINAL WALL ON ABUTMENT WINGWALL

NOTES TO DESIGNER:

Include this standard when using standard BCR-3 or BCR-4.

Terminal wall is detailed on abutment wingwall.

It is the Contractor's responsibility to determine the number of reinforcing bars required as well as any details or dimensions. Therefore, these items are to be left blank in the Reinforcing Steel Schedule.

AW series bars are included in abutment reinforcement.

ADD THE FOLLOWING NOTES, DIMENSIONS, DETAILS, ETC. TO STANDARD:

VIEW A-A:

For projects with bituminous overlay, modify the vertical dimension 9" and the range (1'-9¾" min. – 1'-10¾" max.) for bolt locations and 2'-8" height of terminal wall so that these dimensions will be established from top of overlay surface.

NOTES:

Complete first note by adding the Class I, II or III of corrosion resistant reinforcing steel required. For additional information on corrosion resistant reinforcing steel (CRR), see Structure and Bridge Division Memorandum (current IIM-S&B-81).

Complete sheet no. for cast-in-place concrete railing.

REINFORCING STEEL SCHEDULE:

For projects with bituminous overlay, modify rebar lengths to allow for dimension changes.

STATE	FEDERAL AID ROUTE	FEDERAL AID PROJECT	STATE ROUTE	STATE PROJECT	SHEET NO.
VA.	—				

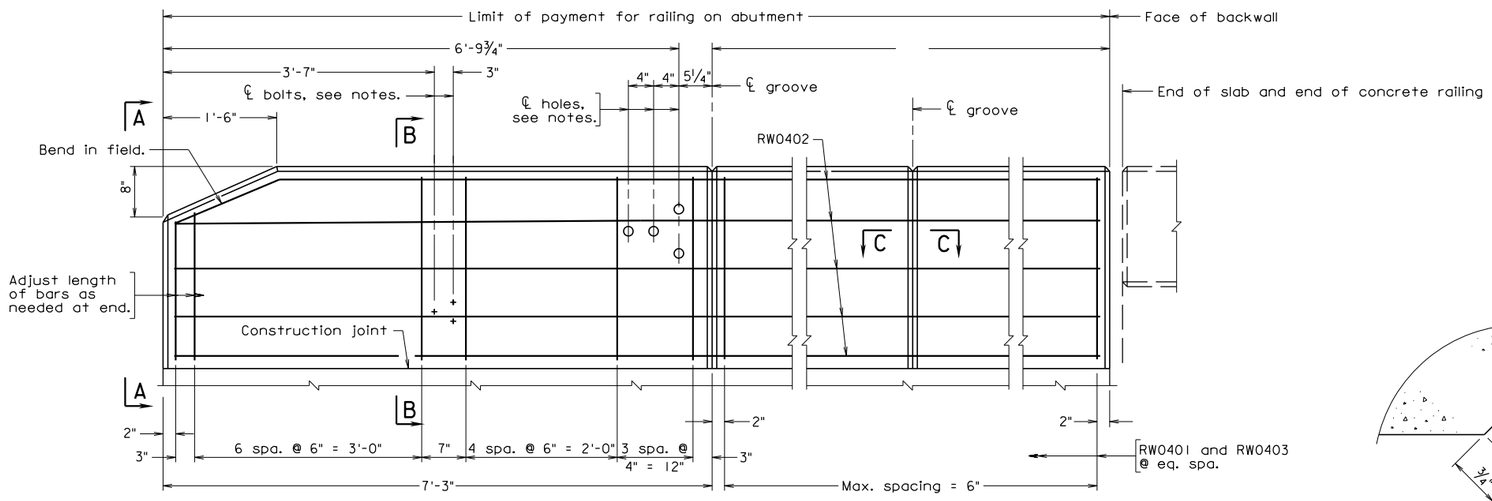

TERMINAL WALL U-BACK WING ABUTMENT

ELEVATION

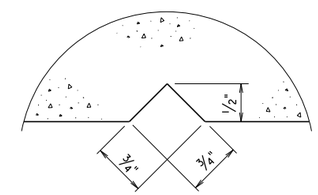

SECTION C-C
Full scale
Groove detail for both sides of wall

Notes:

All bevels for concrete on this sheet shall be ¾". Rounded edges with 1" radius may be used in lieu of bevels along top of rail.

All reinforcing bars shall be Corrosion Resistant Reinforcing Steel, Class __.

Each terminal wall shall be cast as one piece.

The Contractor shall determine all details necessary for installation.

All concrete shall be Class A4.

For details of wingwall below construction joint, see abutment sheets.

Terminal walls are detailed to take guardrail attachment GR-FOA-1.

Holes, where shown, shall be formed with sleeves of 1½" diameter nominal pipe.

Bolts, where shown, shall be ⅝" dia. expansion anchor bolts, 6" long to be drilled and installed when rub rail is attached.

For details and reinforcing steel schedule of cast-in-place concrete railing, see sheet __.

Bid item for terminal wall shall include concrete noted in plans and reinforcing steel indicated in Reinforcing Steel Schedule.

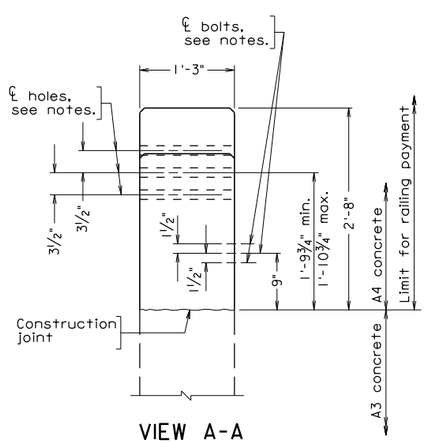

VIEW A-A

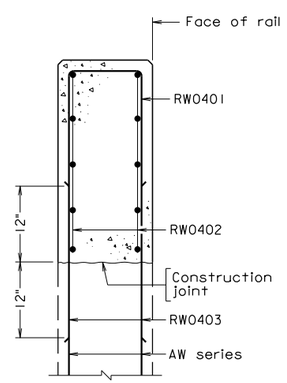

SECTION B-B

REINFORCING STEEL SCHEDULE

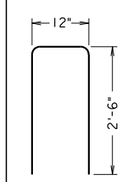

RW0401

Mark	No.	Size	Pin ø	Length	Location
RW0401		#4	3"	5'-10"	Terminal wall and U-back wing
RW0402		#4	—		Terminal wall and U-back wing
RW0403		#4	—	2'-0"	Terminal wall and U-back wing

Dimensions in bending diagram are out-to-out of bars, except as shown.

Scale: 1" = 1'-0" unless otherwise shown.

©2012, Commonwealth of Virginia

No.	Description	Date

Revisions

COMMONWEALTH OF VIRGINIA
DEPARTMENT OF TRANSPORTATION

STRUCTURE AND BRIDGE DIVISION

CAST-IN-PLACE TERMINAL WALL 32" KANSAS CORRAL

Designed: S&B DIV
Drawn: S&B DIV
Checked: S&B DIV

Date

Plan No. BCR-7

Sheet No.

bcr7.dgn

12-14-2012

BCR-7

Sealed and Signed by:
Julius F.J. Volgyi Jr.
Lic. No. 010487
On the date of
December 14, 2012

A copy of the original sealed and signed standard drawing is on file in the Central Office.

VDOT S&B DIVISION
RICHMOND, VA
STRUCTURAL ENGINEER

CAST-IN-PLACE CONCRETE RAILING
KANSAS CORRAL (2'-8")

TERMINAL WALL ON ABUTMENT U-BACK WING

NOTES TO DESIGNER:

Include this standard when using standard BCR-3 or BCR-4.

Terminal wall is detailed on abutment U-back wing.

It is the Contractor's responsibility to determine the number of reinforcing bars required as well as any details or dimensions. Therefore, these items are to be left blank in the Reinforcing Steel Schedule.

AW series bars are included in abutment reinforcement.

ADD THE FOLLOWING NOTES, DIMENSIONS, DETAILS, ETC. TO STANDARD:

VIEW A-A:

For projects with bituminous overlay, modify the vertical dimension 9" and the range (1'-9¾" min. – 1'-10¾" max.) for location of bolts and 2'-8" height of terminal wall so that these dimensions will be established from top of overlay surface.

NOTES:

Complete first note by adding the Class I, II or III of corrosion resistant reinforcing steel required. For additional information on corrosion resistant reinforcing steel (CRR), see Structure and Bridge Division Memorandum (current IIM-S&B-81).

Complete sheet no. for cast-in-place concrete railing.

REINFORCING STEEL SCHEDULE:

Add length for RW0402.

For projects with bituminous overlay, modify rebar lengths to allow for dimension changes.

STATE	FEDERAL AID ROUTE	FEDERAL AID PROJECT	STATE ROUTE	STATE PROJECT	SHEET NO.
VA.	—				

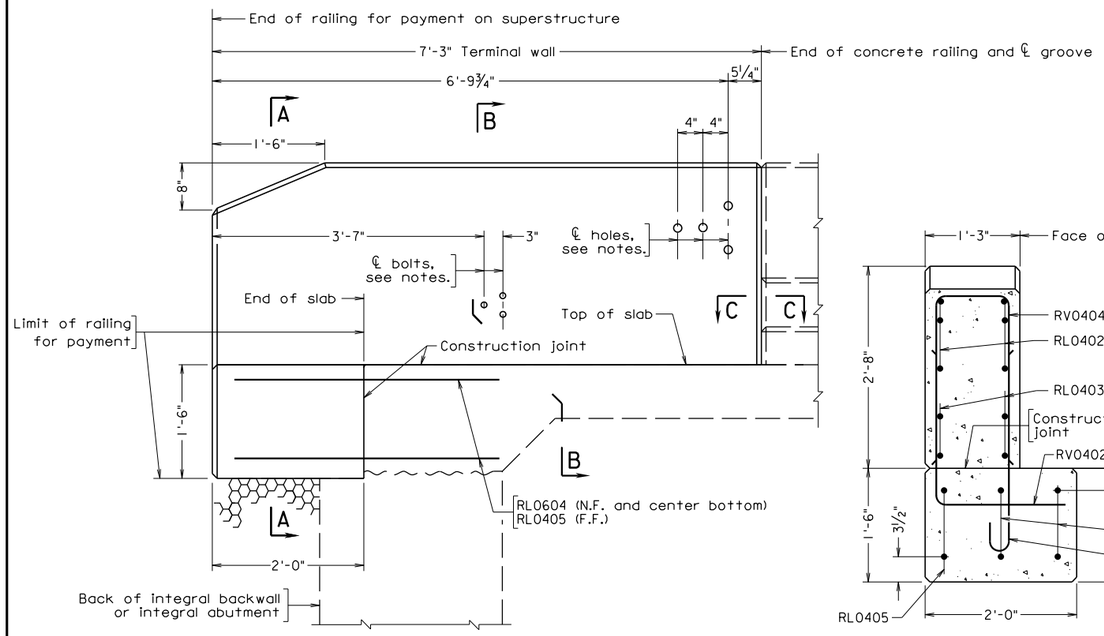

SEMI-INTEGRAL or FULL INTEGRAL ABUTMENT

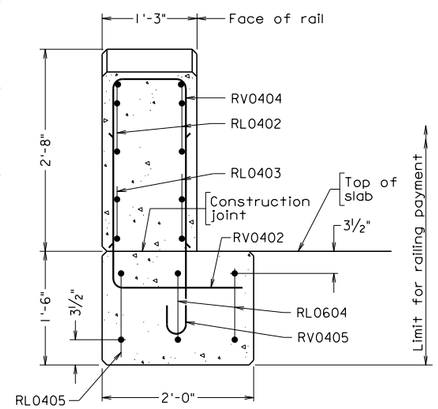

SECTION A-A

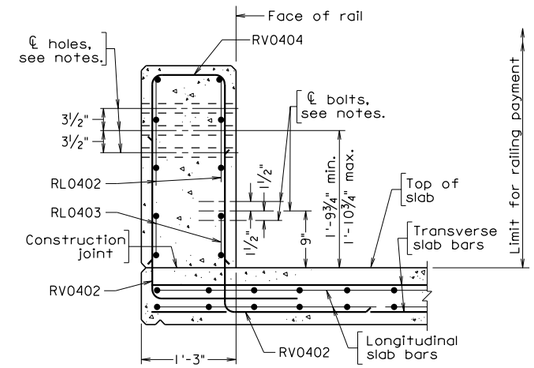

SECTION B-B

Notes:

All bevels for concrete on this sheet shall be ¾". Rounded edges with 1" radius may be used in lieu of bevels along top of rail.

All reinforcing bars shall be Corrosion Resistant Reinforcing Steel, Class __.

Each terminal wall shall be cast as one piece.

The Contractor shall determine all details necessary for installation.

All concrete shall be Class A4.

For details of wingwall below construction joint, see abutment sheets.

Terminal walls are detailed to take guardrail attachment GR-FOA-1.

Holes, where shown, shall be formed with sleeves of 1½" diameter nominal pipe.

Bolts, where shown, shall be ⅝" dia. expansion anchor bolts, 6" long to be drilled and installed when rub rail is attached.

For details and reinforcing steel schedule of cast-in-place concrete railing, see sheet __.

Bid item for terminal wall shall include concrete noted in plans and reinforcing steel indicated in Reinforcing Steel Schedule.

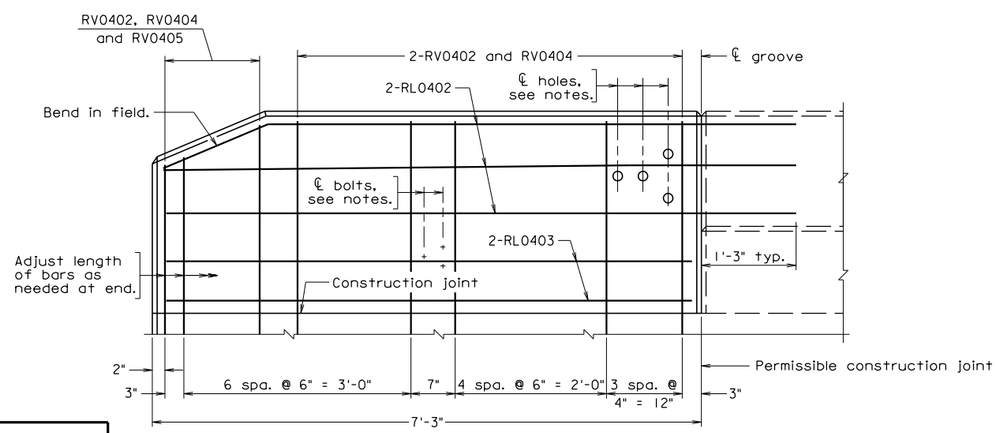

ELEVATION - TERMINAL WALL

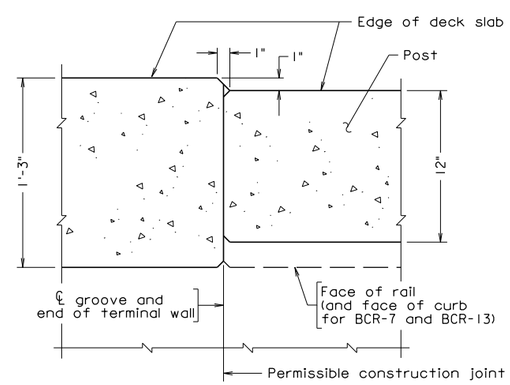

SECTION C-C
Scale: 2" = 1'-0"

REINFORCING STEEL SCHEDULE

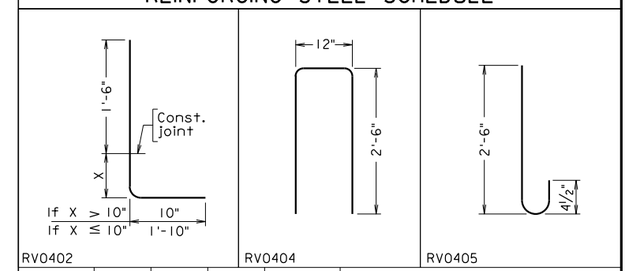

Mark	No.	Size	Pin ø	Length	Location
RL0402		#4	—	8'-4"	Terminal wall
RL0403		#4	—	6'-11"	Terminal wall
RL0604		#6	—	4'-0"	Terminal wall end support
RL0405		#4	—	4'-0"	Terminal wall end support
RV0402		#4	3"		Terminal wall
RV0404		#4	3"	5'-10"	Terminal wall
RV0405		#4	3"	3'-0"	Terminal wall

Dimensions in bending diagram are out-to-out of bars, except as shown.

bcr8.dgn

12-14-2012

BCR-8

Sealed and Signed by:
Julius F.J. Volgyi Jr.
Lic. No. 010487
On the date of
December 14, 2012

A copy of the original sealed and signed standard drawing is on file in the Central Office.

VDOT S&B DIVISION
RICHMOND, VA
STRUCTURAL ENGINEER

No.	Description	Date
	Revisions	

Scale: 1" = 1'-0" unless otherwise shown.

©2012, Commonwealth of Virginia

COMMONWEALTH OF VIRGINIA
DEPARTMENT OF TRANSPORTATION

STRUCTURE AND BRIDGE DIVISION

CAST-IN-PLACE TERMINAL WALL 32" KANSAS CORRAL

Designed: S&B DIV
Drawn: S&B DIV
Checked: S&B DIV

Date

Plan No. BCR-8

Sheet No.

CAST-IN-PLACE CONCRETE RAILING
KANSAS CORRAL (2'-8")

TERMINAL WALL ON SUPERSTRUCTURE WITH FULL INTEGRAL OR SEMI-INTEGRAL ABUTMENT

NOTES TO DESIGNER:

Include this standard when using standard BCR-3 or BCR-4.

Terminal wall is detailed on the deck slab of a superstructure with full integral or semi-integral abutment. A 2'-0" wide section at the edge of superstructure is extended 2'-0" from the end of deck slab to support the end of the terminal wall. This concrete section and the terminal wall shall be part of the steel railing for payment. The superstructure plan would need to be adjusted to reflect the slab extension at the corner of the end deck slab.

It is the Contractor's responsibility to determine the number of reinforcing bars required as well as any details or dimensions. Therefore, these items are to be left blank in the Reinforcing Steel Schedule.

Transverse bars and longitudinal bars of the deck slab or slab span are included in the Superstructure Reinforcing Steel Schedule.

ADD THE FOLLOWING NOTES, DIMENSIONS, DETAILS, ETC. TO STANDARD:

SECTION A-A:

For projects with bituminous overlay, modify 2'-8" height of terminal wall so that this dimension will be established from top of overlay surface.

SECTION B-B:

For projects with bituminous overlay, modify the vertical dimension 9" and the range (1'-9¾" min. – 1'-10¾" max.) for location of bolts so that these dimensions will be established from top of overlay surface.

NOTES:

Complete first note by adding the Class I, II or III of corrosion resistant reinforcing steel required. For additional information on corrosion resistant reinforcing steel (CRR), see Structure and Bridge Division Memorandum (current IIM-S&B-81).

Complete sheet no. for cast-in-place concrete railing and for integral abutment.

REINFORCING STEEL SCHEDULE:

Add dimension and length for rebar RV0402.

For projects with bituminous overlay, modify rebar lengths to allow for dimension changes.

STATE	FEDERAL AID ROUTE	FEDERAL AID PROJECT	STATE ROUTE	STATE PROJECT	SHEET NO.
VA.	—				

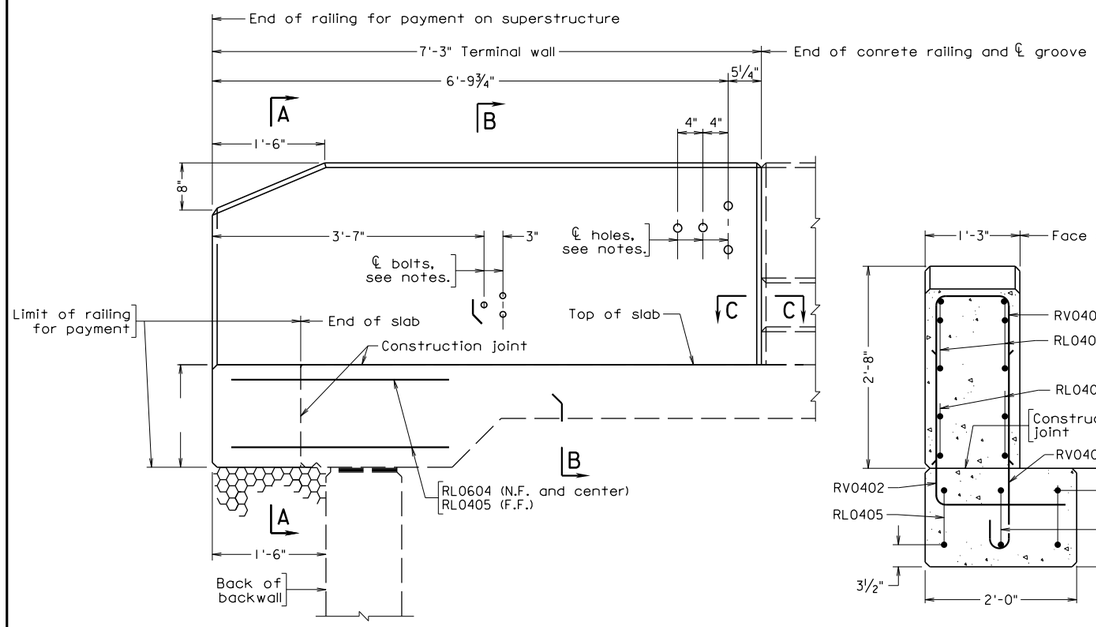

DECK SLAB EXTENSION
ABUTMENT

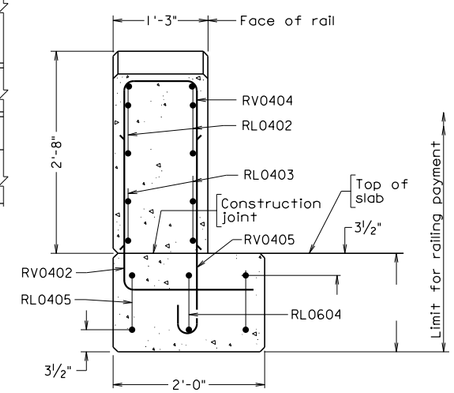

SECTION A-A

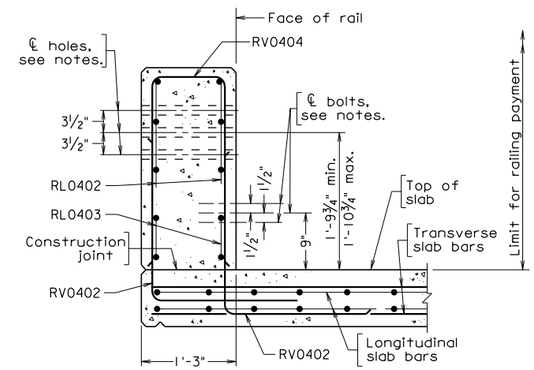

SECTION B-B

Notes:

All bevels for concrete on this sheet shall be ¾". Rounded edges with 1" radius may be used in lieu of bevels along top of rail.

All reinforcing bars shall be Corrosion Resistant Reinforcing Steel, Class __.

Each terminal wall shall be cast as one piece.

The Contractor shall determine all details necessary for installation.

All concrete shall be Class A4.

For details of wingwall below construction joint, see abutment sheets.

Terminal walls are detailed to take guardrail attachment GR-FOA-1.

Holes, where shown, shall be formed with sleeves of 1½" diameter nominal pipe.

Bolts, where shown, shall be ⅝" dia. expansion anchor bolts, 6" long to be drilled and installed when rub rail is attached.

For details and reinforcing steel schedule of cast-in-place concrete railing, see sheet __.

Bid item for terminal wall shall include concrete noted in plans and reinforcing steel indicated in Reinforcing Steel Schedule.

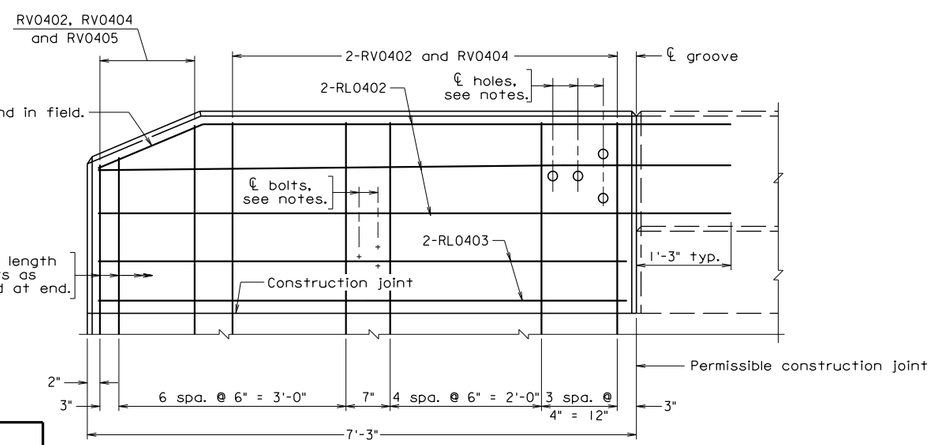

ELEVATION - TERMINAL WALL

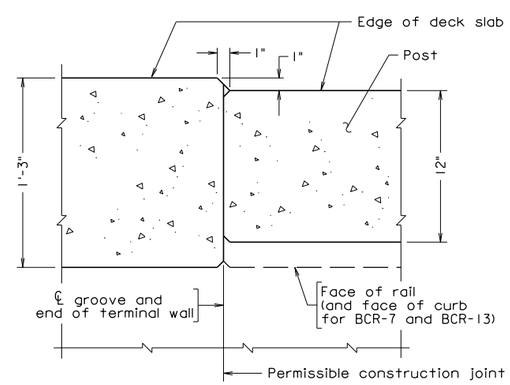

SECTION C-C
Scale: 2" = 1'-0"

REINFORCING STEEL SCHEDULE

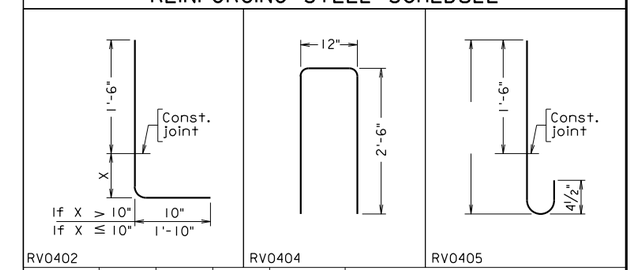

Mark	No.	Size	Pin ø	Length	Location
RL0402		#4	—	8'-4"	Terminal wall
RL0403		#4	—	6'-11"	Terminal wall
RL0604		#6	—	4'-0"	Terminal wall end support
RL0405		#4	—	4'-0"	Terminal wall end support
RV0402		#4	3"		Terminal wall
RV0404		#4	3"	5'-10"	Terminal wall
RV0405		#4	3"		Terminal wall

Dimensions in bending diagram are out-to-out of bars, except as shown.

bcr9.dgn

12-14-2012

BCR-9

Sealed and Signed by:
Julius F.J. Volgyi Jr.
Lic. No. 010487
On the date of
December 14, 2012

A copy of the original sealed and signed standard drawing is on file in the Central Office.

VDOT S&B DIVISION
RICHMOND, VA
STRUCTURAL ENGINEER

No.	Description	Date
	Revisions	

Scale: 1" = 1'-0" unless otherwise shown.

©2012, Commonwealth of Virginia

COMMONWEALTH OF VIRGINIA
DEPARTMENT OF TRANSPORTATION

STRUCTURE AND BRIDGE DIVISION

CAST-IN-PLACE TERMINAL WALL 32" KANSAS CORRAL

Designed: S&B DIV
Drawn: S&B DIV
Checked: S&B DIV

Date

Plan No. BCR-9

Sheet No.

CAST-IN-PLACE CONCRETE RAILING
KANSAS CORRAL (2'-8")

TERMINAL WALL ON SUPERSTRUCTURE WITH DECK SLAB EXTENSION

NOTES TO DESIGNER:

Include this standard when using standard BCR-3 or BCR-4.

Terminal wall is detailed on the deck slab extension of a superstructure or on a slab span. A 2'-0" wide section at the edge of superstructure is extended further from the end of deck slab to an overall distance of 1'-6" from the end of the terminal wall to the back of abutment backwall (back of abutment seat, in the case of a slab span). This concrete section and the terminal wall shall be part of the steel railing for payment. The superstructure plan would need to be adjusted to reflect the slab extension at the corner of the end deck slab or slab span.

It is the Contractor's responsibility to determine the number of reinforcing bars required as well as any details or dimensions. Therefore, these items are to be left blank in the Reinforcing Steel Schedule.

Transverse bars and longitudinal bars of the deck slab or slab span are included in the Superstructure Reinforcing Steel Schedule.

ADD THE FOLLOWING NOTES, DIMENSIONS, DETAILS, ETC. TO STANDARD:

ELEVATION:

Provide dimension of terminal wall end support.

SECTION A-A:

Provide dimension of terminal wall end support.

For projects with bituminous overlay, modify 2'-8" height of terminal wall so that this dimension will be established from top of overlay surface.

SECTION B-B:

For projects with bituminous overlay, modify the vertical dimension 9" and the range (1'-9¾" min. – 1'-10¾" max.) for location of bolts so that these dimensions will be established from top of overlay surface.

NOTES:

Complete first note by adding the Class I, II or III of corrosion resistant reinforcing steel required. For additional information on corrosion resistant reinforcing steel (CRR), see Structure and Bridge Division Memorandum (current IIM-S&B-81).

Complete sheet no. for deck slab extension or slab span and for cast-in-place concrete railing.

CAST-IN-PLACE CONCRETE RAILING
KANSAS CORRAL (2'-8")

TERMINAL WALL ON SUPERSTRUCTURE WITH DECK SLAB EXTENSION

ADD THE FOLLOWING NOTES, DIMENSIONS, DETAILS, ETC. TO STANDARD: (cont'd)

REINFORCING STEEL SCHEDULE:

Add dimensions and lengths for rebars RV0402 and RV0405.

For projects with bituminous overlay, modify rebar lengths to allow for dimension changes.

STATE	FEDERAL AID ROUTE	FEDERAL AID PROJECT	STATE ROUTE	STATE PROJECT	SHEET NO.
VA.	—				

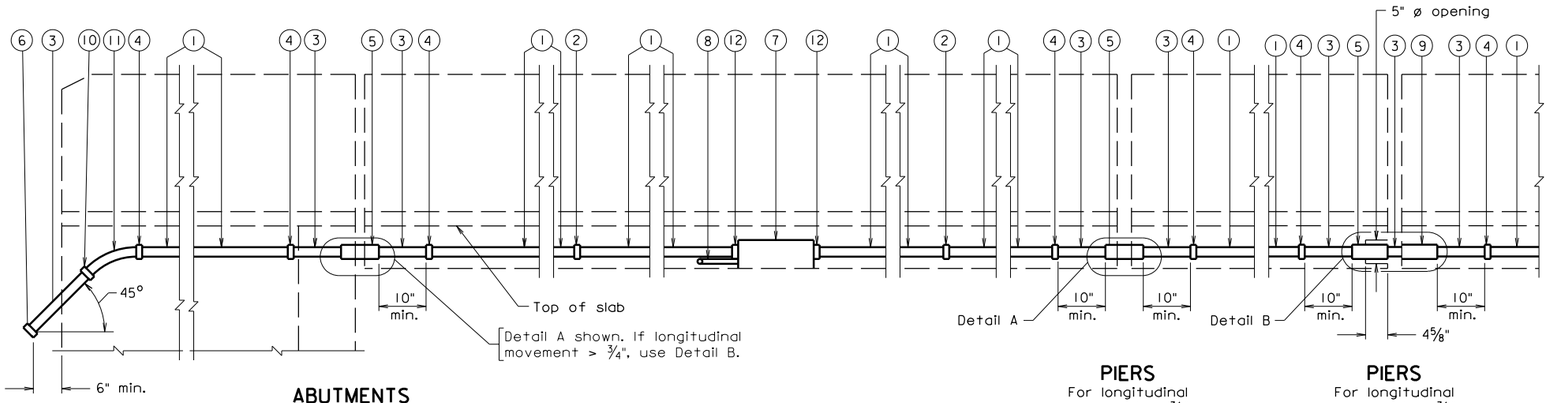

CONDUIT LAYOUT
Scale: ¾" = 1'-0"

1. 2" ø nonmetallic conduit
2. Nonmetallic coupling
3. 2" ø metal conduit
4. Adapter to connect nonmetallic conduit to metal conduit
5. Metal expansion and deflection fitting
6. 2" ø pipe cap
7. 8" x 6" x 1'-4" junction box
8. 1" ø galvanized steel pipe. Furnish locknut and bushing to connect conduit to junction box.
9. Metal expansion fitting
10. Pipe coupling
11. 2" ø 45° 13" R steel elbow
12. Bell fitting or bushing to connect conduit to junction box

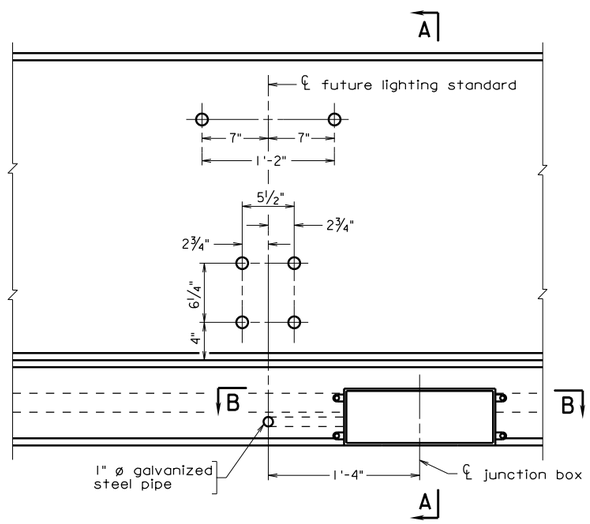

ELEVATION

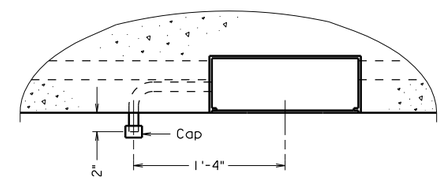

SECTION B-B

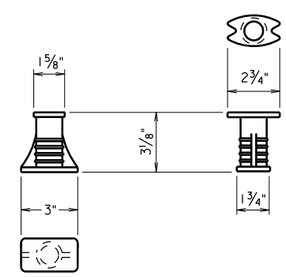

THREADED INSERT FOR 1" Ø BOLT
Scale: 3" = 1'-0"

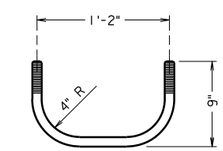

1" Ø GALVANIZED ROD E

Notes:

Close adherence to the manufacturer's requirements in regard to clearances for the installation of deflection fittings shall be observed.

Cost of Bridge Conduit System and anchorages shall be included in price bid for parapet.

Longitudinal movement is the maximum amount of movement of the expansion and deflection fitting calculated for placement at 60°F and shall be adjusted in accordance with manufacturer's requirements. The amount of movement shall be increased or decreased for every 10°F temperature drop or rise respectively by t.

The Contractor shall determine all dimensions and details necessary for installation.

Conduit shall be grounded in conformance with Section 700 with grounding materials that conform to Section 238.

Abutment	Pier	Longitudinal Movement	t	Detail Type

When deck is continuous over pier, expansion and deflection fitting detail is not required.

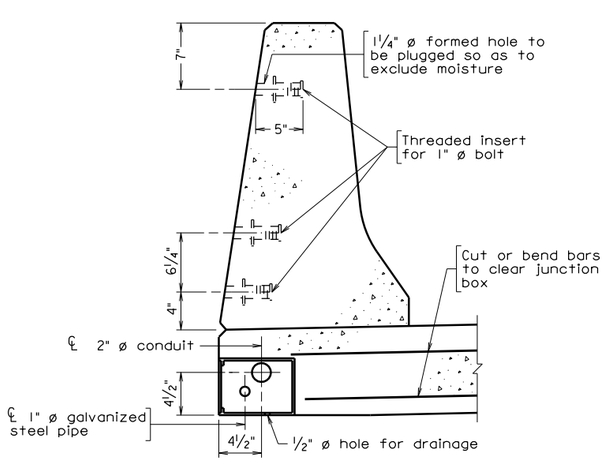

SECTION A-A

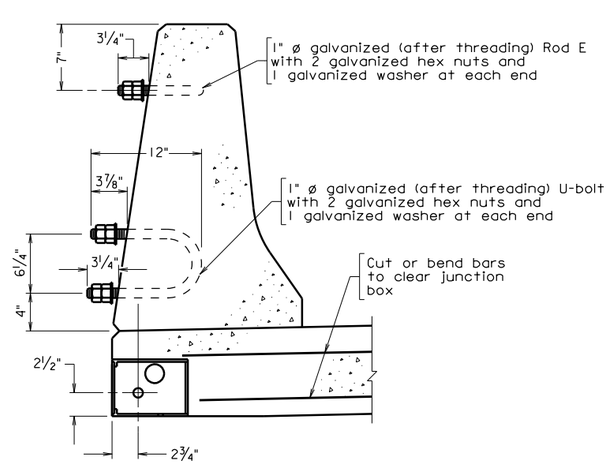

ALTERNATE SECTION A-A

Scale: 1½" = 1'-0" unless otherwise shown.

©2010, Commonwealth of Virginia

bcs21a.dgn

06-14-2010

Sealed and Signed by:
Julius F.J. Volgyi Jr.
Lic. No. 010487
On the date of
June 14, 2010

A copy of the original sealed and signed standard drawing is on file in the Central Office.

VDOT S&B DIVISION
RICHMOND, VA
STRUCTURAL ENGINEER

BCS-21A

No.	Description	Date

Revisions

COMMONWEALTH OF VIRGINIA
DEPARTMENT OF TRANSPORTATION

STRUCTURE AND BRIDGE DIVISION

BRIDGE CONDUIT SYSTEM

Designed: S&B DIV
Drawn: S&B DIV
Checked: S&B DIV

Date

Plan No. BCS-21A

Sheet No.

BRIDGE CONDUIT SYSTEM
FOR FUTURE LIGHTING
WITH F-SHAPE PARAPET

NOTES TO DESIGNER:

Standard is to be used only when lighting is not installed as part of project but at some future date and only the conduit and anchorage system is required. Details are for use with F-shape parapet. Terminal wall for parapet is located on abutment or U-back wing.

Access to junction box is from the outside of the parapet, not from the traffic side.

Light pole anchorage is designed in accordance with AASHTO *Standard Specifications for Structural Supports for Highway Signs, Luminaires and Traffic Signals*, 4th Edition (2001), including Interim Specifications. Design requirements are as follows:

Pole mounting height: 40 feet
Pole size: avg. 6" O.D. (8" O.D. on base)
Bracket arm: length: 6'-0"; weight of truss: 15 lbs.
Size of luminaire: 3.2 sq. ft.
Weight of luminaire: 81 lbs.

Light pole anchorage is to be located no closer than 4 feet to abutment (backwall) or parapet joint. Show location of centerline of light pole anchorage(s) on appropriate plan sheet, normally plan of deck slab.

Size of junction chamber: 8" x 6" x 6". Show location of junction box(es) on appropriate plan sheet, normally plan of deck slab. Conduit size: 2" diameter. Show location and size of conduit(s) on transverse section sheet. For larger conduits the bend radius in the conduit (steel elbow) in the CONDUIT LAYOUT needs to be changed.

Longitudinal movement (for filling table):

Coefficient of linear expansion of:

concrete: 0.000006 in./in./°F (AASHTO *Standard Specification for Highway Bridges*, 1996; 1997 and 1998 Interim Specifications; and VDOT modifications, Article 8.5.3)

steel: 0.0000065 in./in./°F (AASHTO *Standard Specification for Highway Bridges*, 1996; 1997 and 1998 Interim Specifications; and VDOT modifications, Article 10.2.2)

Temperature ranges (AASHTO *Standard Specification for Highway Bridges*, 1996; 1997 and 1998 Interim Specifications; and VDOT modifications, Article 3.16):

concrete structures: 40°F
steel structures: 60°F

Example: Steel structure, 250 feet of expansion

Longitudinal movement = 250 x 0.0000065 x 60 = 0.0975 ft = 1 $^{1}/_{8}$ in.
t (movement/10°F) = 250 x 0.0000065 x 10 = 0.01625 ft = $^{3}/_{16}$ in.

BRIDGE CONDUIT SYSTEM
FOR FUTURE LIGHTING
WITH F-SHAPE PARAPET

ADD THE FOLLOWING NOTES, DIMENSIONS, DETAILS, ETC. TO STANDARD:

TABLE:

Complete table. Use $^{1}/_{8}$" multiples for longitudinal movement. Use $^{1}/_{16}$" multiples for t (movement/10°F).

STATE	FEDERAL AID ROUTE	FEDERAL AID PROJECT	STATE ROUTE	STATE PROJECT	SHEET NO.
VA.	—				

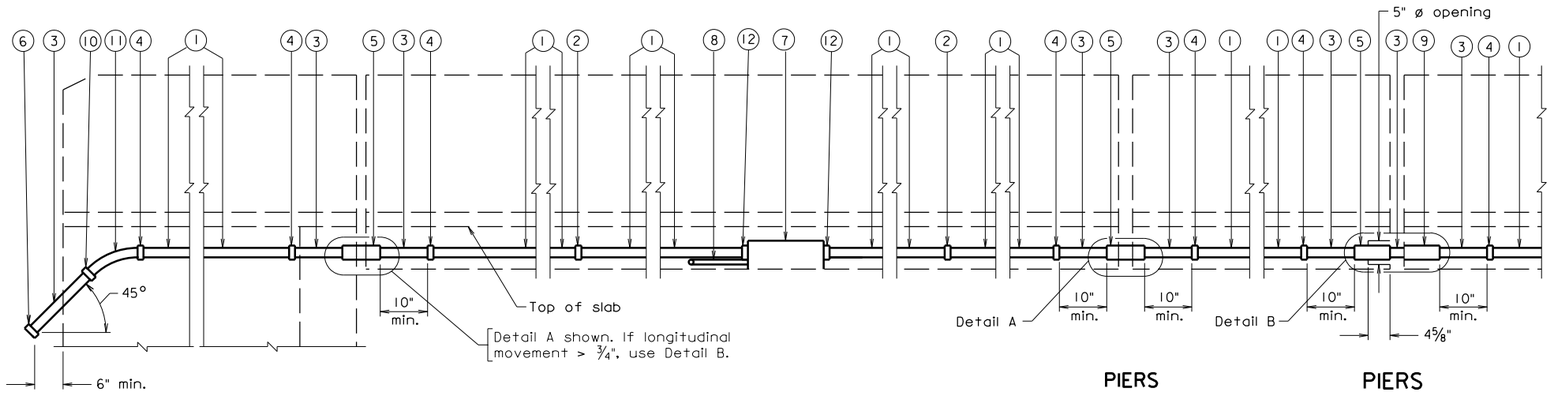

ABUTMENTS

PIERS
For longitudinal movement ≤ ¾"

PIERS
For longitudinal movement > ¾"

CONDUIT LAYOUT

Scale: ¾" = 1'-0"

Notes:

Close adherence to the manufacturer's requirements in regard to clearances for the installation of deflection fittings shall be observed.

Cost of Bridge Conduit System and anchorages shall be included in price bid for parapet

Longitudinal movement is the maximum amount of movement of the expansion and deflection fitting calculated for placement at 60°F and shall be adjusted in accordance with manufacturer's requirements. The amount of movement shall be increased or decreased for every 10°F temperature drop or rise respectively by t.

The Contractor shall determine all dimensions and details necessary for installation.

Conduit shall be grounded in conformance with Section 700 with grounding materials that conform to Section 238.

1. 2" ø nonmetallic conduit
2. Nonmetallic coupling
3. 2" ø metal conduit
4. Adapter to connect nonmetallic conduit to metal conduit
5. Metal expansion and deflection fitting
6. 2" ø pipe cap
7. 8" x 6" x 1'-4" junction box
8. 1" ø galvanized steel pipe. Furnish locknut and bushing to connect conduit to junction box.
9. Metal expansion fitting
10. Pipe coupling
11. 2" ø 45° 13" R steel elbow
12. Bell fitting or bushing to connect conduit to junction box

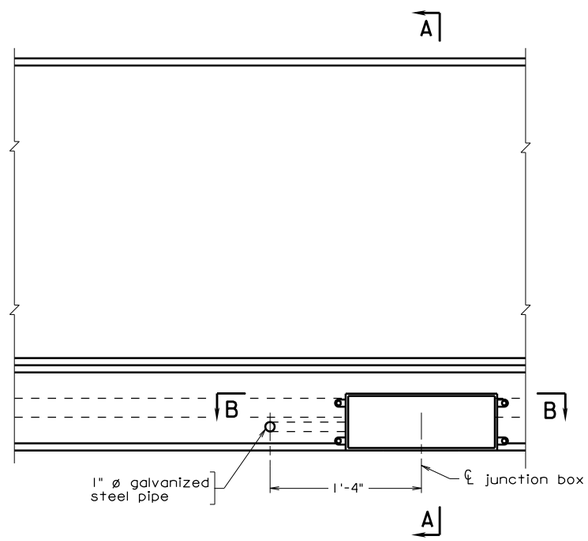

ELEVATION

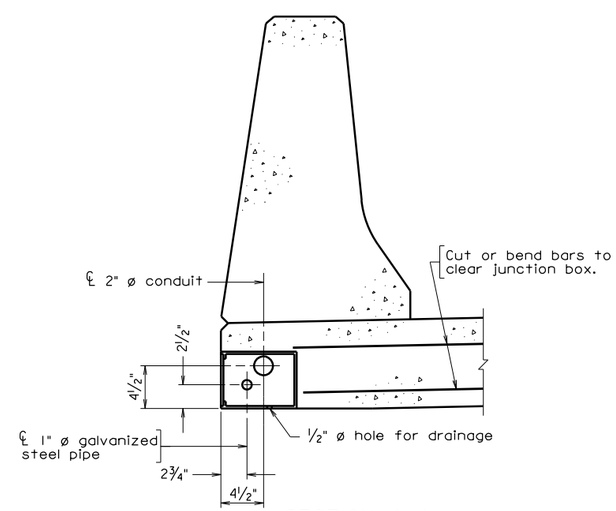

SECTION A-A

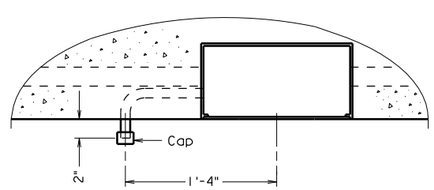

SECTION B-B

Abutment	Pier	Longitudinal Movement	t	Detail Type

When deck is continuous over pier, expansion and deflection fitting detail is not required.

Scale: 1½" = 1'-0" unless otherwise shown.

©2010, Commonwealth of Virginia

bcs22a.dgn

06-14-2010

Sealed and Signed by:
Julius F.J. Volgyi Jr.
Lic. No. 010487
On the date of
June 14, 2010

A copy of the original sealed and signed standard drawing is on file in the Central Office.

VDOT S&B DIVISION
RICHMOND, VA
STRUCTURAL ENGINEER

BCS-22A

No.	Description	Date

Revisions

COMMONWEALTH OF VIRGINIA
DEPARTMENT OF TRANSPORTATION

STRUCTURE AND BRIDGE DIVISION

BRIDGE CONDUIT SYSTEM

Designed: S&B DIV
Drawn: S&B DIV
Checked: S&B DIV

Date

Plan No. BCS-22A

Sheet No.

BRIDGE CONDUIT SYSTEM
OTHER THAN LIGHTING
FOR F-SHAPE PARAPET

NOTES TO DESIGNER:

Standard is to be used for miscellaneous bridge conduit system other than bridge lighting, e.g., for lighting signs/sign structures attached to bridge. Details are for use with F-shape parapet. Terminal wall for parapet is located on abutment or U-back wing.

Access to junction box is from the outside of the parapet, not from the traffic side. If access is required from inside parapet face is required, use standard BCS-29A.

Size of junction chamber: 8" x 6" x 6". Show location of junction box(es) on appropriate plan sheet, normally plan of deck slab. Conduit size: 2" diameter. Show location and size of conduit(s) on transverse section sheet. For larger conduits the bend radius in the conduit (steel elbow) in the CONDUIT LAYOUT needs to be changed.

Longitudinal movement (for filling table):

Coefficient of linear expansion of:

concrete: 0.000006 in./in./°F (AASHTO *Standard Specification for Highway Bridges*, 1996; 1997 and 1998 Interim Specifications; and VDOT modifications, Article 8.5.3)

steel: 0.0000065 in./in./°F (AASHTO *Standard Specification for Highway Bridges*, 1996; 1997 and 1998 Interim Specifications; and VDOT modifications, Article 10.2.2)

Temperature ranges (AASHTO *Standard Specification for Highway Bridges*, 1996; 1997 and 1998 Interim Specifications; and VDOT modifications, Article 3.16)::

concrete structures: 40°F
steel structures: 60°F

Example: Steel structure, 250 feet of expansion

Longitudinal movement = 250 x 0.0000065 x 60 = 0.0975 ft = 1 $^{1}/_{8}$ in.
t (movement/10°F) = 250 x 0.0000065 x 10 = 0.01625 ft = $^{3}/_{16}$ in.

ADD THE FOLLOWING NOTES, DIMENSIONS, DETAILS, ETC. TO STANDARD:

TABLE:

Complete table. Use $^{1}/_{8}$" multiples for longitudinal movement. Use $^{1}/_{16}$" multiples for t (movement/10°F).

STATE	FEDERAL AID ROUTE	FEDERAL AID PROJECT	STATE ROUTE	STATE PROJECT	SHEET NO.
VA.	—				

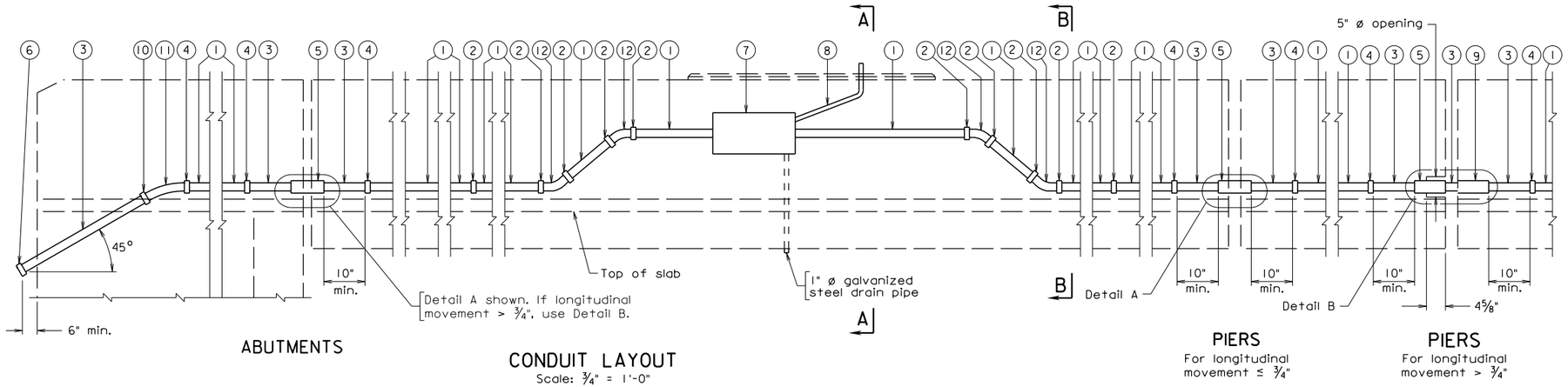

1. 2" ø nonmetallic conduit
2. Nonmetallic coupling
3. 2" ø metal conduit
4. Adapter to connect nonmetallic conduit to metal conduit
5. Metal expansion and deflection fitting
6. 2" ø pipe cap
7. 8" x 6" x 1'-4" formed junction chamber
8. 1" ø metal conduit.
9. Metal expansion fitting
10. Pipe coupling
11. 2" ø 45° 13" R steel elbow
12. 2" ø 45° 9½" R nonmetallic elbow

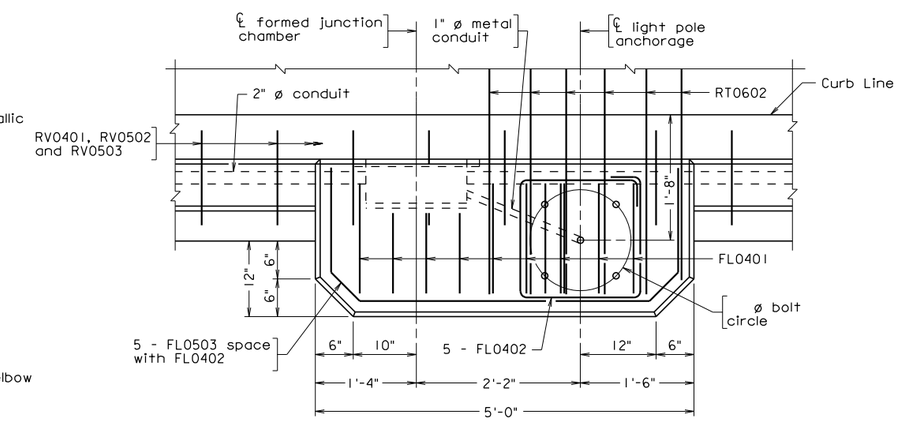

Abutment	Pier	Longitudinal Movement	t	Detail Type
·	·	·	·	·
·	·	·	·	·
·	·	·	·	·
·	·	·	·	·
·	·	·	·	·
·	·	·	·	·

When deck is continuous over pier, expansion and deflection fitting detail is not required.

Notes:

All reinforcing bars shall be Corrosion Resistant Reinforcing Steel, Class __.

Cut or bend bars to clear junction chamber.

Close adherence to the manufacturer's requirements in regard to clearances for the installation of deflection fittings shall be observed.

Junction chamber frame and cover to be galvanized, after fabrication, in accordance with ASTM A123.

Cost of Bridge Conduit System and anchorages shall be included in price bid for parapet.

Anchor bolt specifications:

Nuts (Top): ASTM F467 Alloy 6262-T9 or 6061-T6.
(Bottom): ASTM A563.
Thread series for all nuts to be UNC-2B.
Washers: (Top): ASTM B209 Alloy Alclad 2024-T3 or T4, 2¼" ø x 0.165".
(Bottom): ASTM F844.
Rods: 1" diameter, ASTM A276, type 430 or 410 annealed, hot-finished. Threads on rods may be rolled or cut. 3½" at each end of rod shall be threaded. Each rod shall be supplied with 3 washers and 3 nuts.

In the designations noted above, top refers to hardware above the top of baseplate. Bottom refers to hardware below the baseplate including embedment in concrete.

Longitudinal movement is the maximum amount of movement of the expansion and deflection fitting calculated for placement at 60° F and shall be adjusted in accordance with manufacturer's requirements. The amount of movement shall be increased or decreased for every 10° F temperature drop or rise respectively by t.

The Contractor shall determine all dimensions and details necessary for installation.

Conduit shall be grounded in conformance with Section 700 with grounding materials that conform to Section 238.

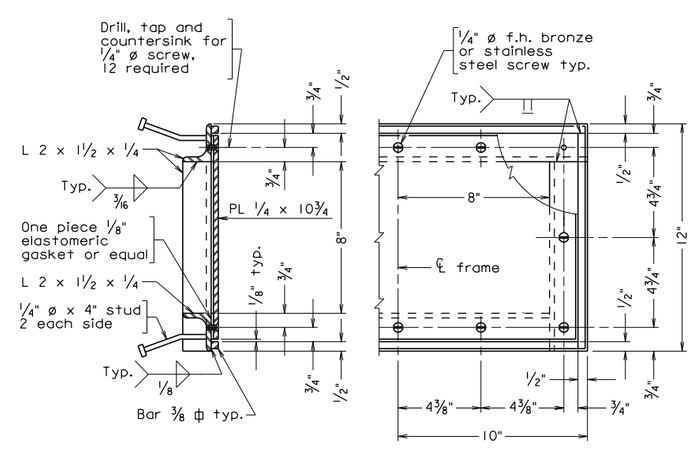

REINFORCING STEEL SCHEDULE

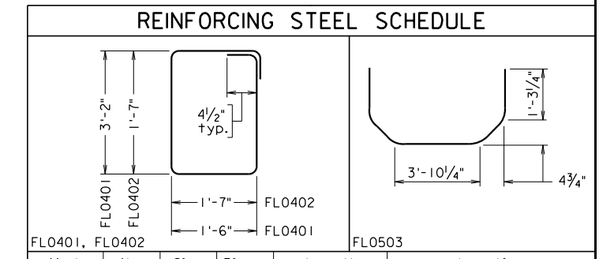

Mark	No.	Size	Pin ø	Length	Location
FL0401	·	#4	2"	9'-8"	Light base
FL0402	·	#4	2"	6'-8"	Light base
FL0503	·	#5	3¾"	7'-5"	Light base
RV0401	⊙	#4	·	·	·
RV0502	⊙	#5	·	·	·
RV0503	⊙	#5	·	·	·
RT0401	⊙	#4	·	·	·
RT0602	·	#6	—	·	Top of deck slab

Dimensions in bending diagram are out-to-out of bars.

⊙ Bars RV0401, RV0502, RV0503 and RT0401 are detailed and accounted for on parapet detail sheet.

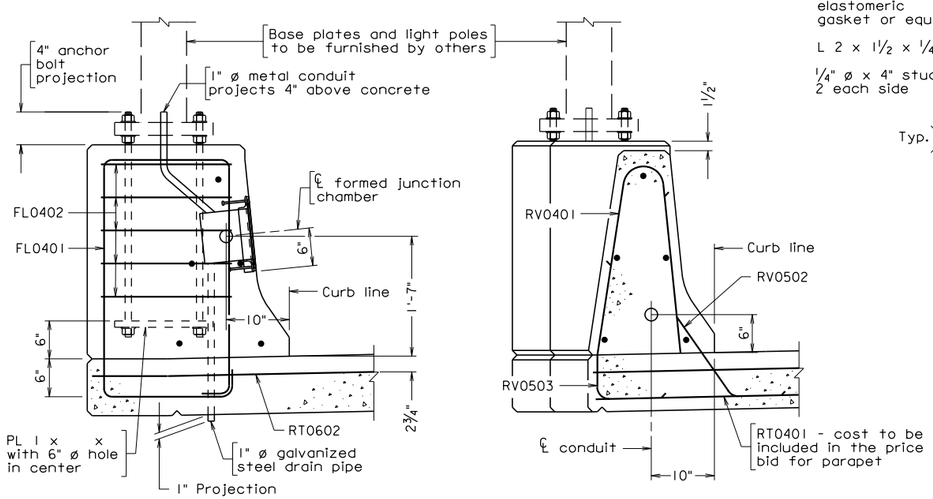

Scale: 1" = 1'-0" unless otherwise shown.

© 2012, Commonwealth of Virginia

bcs28a.dgn

08-07-2012

BCS-28A

Sealed and Signed by:
Julius F.J. Volgyi Jr.
Lic. No. 010487
On the date of
Aug. 7, 2012

A copy of the original sealed and signed standard drawing is on file in the Central Office.

VDOT S&B DIVISION
RICHMOND, VA
STRUCTURAL ENGINEER

No.	Description	Date

Revisions

COMMONWEALTH OF VIRGINIA
DEPARTMENT OF TRANSPORTATION

STRUCTURE AND BRIDGE DIVISION

BRIDGE CONDUIT SYSTEM

Designed: .....
Drawn: ...S&B DIV
Checked: .....

Date

Plan No. BCS-28A

Sheet No.

BRIDGE CONDUIT SYSTEM
FOR LIGHTING
WITH F-SHAPE PARAPET

NOTES TO DESIGNER:

Standard is to be used only when lighting is installed as part of project and used with F-shape parapet (standard BPB-3A or BPB-3B). Terminal wall for parapet is located on abutment or U-back wing.

Access to junction chamber is from the inside of the parapet face on the traffic side.

Light pole anchorage is designed in accordance with AASHTO *Standard Specifications for Structural Supports for Highway Signs, Luminaires and Traffic Signals*, 4th Edition (2001), including Interim Specifications. Design requirements are as follows:

Pole mounting height: 40 feet
Pole size: avg. 6" O.D. (8" O.D. on base)
Bracket arm: length: 6'-0"; weight of truss: 15 lbs.
Size of luminaire: 3.2 sq. ft.
Weight of luminaire: 81 lbs.
Bolt circle for anchorage (base plate): 11" diameter thru 16" diameter

Light pole anchorage is to be located no closer than 4 feet to abutment (backwall) or parapet joint. Show location of centerline of light pole anchorage(s) on appropriate plan sheet, normally plan of deck slab.

Size of junction chamber: 8" x 8" x 1'-4". Conduit size: 2" diameter. Show location and size of conduit(s) on transverse section sheet. Show location of junction chambers on appropriate plan sheet, normally plan of deck slab.

For larger conduits the bend radius in the conduit (steel elbow and nonmetallic elbow) and the run of the junction chamber need to be changed in the CONDUIT LAYOUT. The minimum run for the junction chamber is 8 x nominal diameter of conduit. For example, the minimum run for a 2" dia. conduit is 1-4" (8 x 2" = 16" = 1'-4"). If larger conduit is used, JUNCTION CHAMBER FRAME needs to be adjusted, i.e., spacing of screws needs to be adjusted. Also, the size of the concrete blister needs to be adjusted to provide additional space between the junction chamber and the light anchorage.

Longitudinal movement (for filling table):

Coefficient of linear expansion of:

concrete: 0.000006 in./in./°F (AASHTO *Standard Specification for Highway Bridges*, 1996; 1997 and 1998 Interim Specifications; and VDOT modifications, Article 8.5.3)

steel: 0.0000065 in./in./°F (AASHTO *Standard Specification for Highway Bridges*, 1996; 1997 and 1998 Interim Specifications; and VDOT modifications, Article 10.2.2)

BRIDGE CONDUIT SYSTEM
FOR LIGHTING
WITH F-SHAPE PARAPET

NOTES TO DESIGNER (cont'd):

Temperature ranges (AASHTO *Standard Specification for Highway Bridges*, 1996; 1997 and 1998 Interim Specifications; and VDOT modifications, Article 3.16):

concrete structures: 40°F
steel structures: 60°F

Example: Steel structure, 250 feet of expansion

Longitudinal movement = 250 x 0.0000065 x 60 = 0.0975 ft = 1 $^{1}/_{8}$ in.
t (movement/10°F) = 250 x 0.0000065 x 10 = 0.01625 ft = $^{3}/_{16}$ in.

ADD THE FOLLOWING NOTES, DIMENSIONS, DETAILS, ETC. TO STANDARD:

PLAN:

Add diameter of bolt circle.

SECTION A-A:

Add size of plate.

TABLE:

Complete table. Use $^{1}/_{8}$" multiples for longitudinal movement. Use $^{1}/_{16}$" multiples for t (movement/10°F).

NOTES:

Complete first note by adding the Class I, II or III of corrosion resistant reinforcing steel required. (For additional information on corrosion resistant reinforcing steels (CRR), see Structure and Bridge Division Memorandum (current IIM-S&B-81).

STATE	FEDERAL AID ROUTE	FEDERAL AID PROJECT	STATE ROUTE	STATE PROJECT	SHEET NO.
VA.	—				

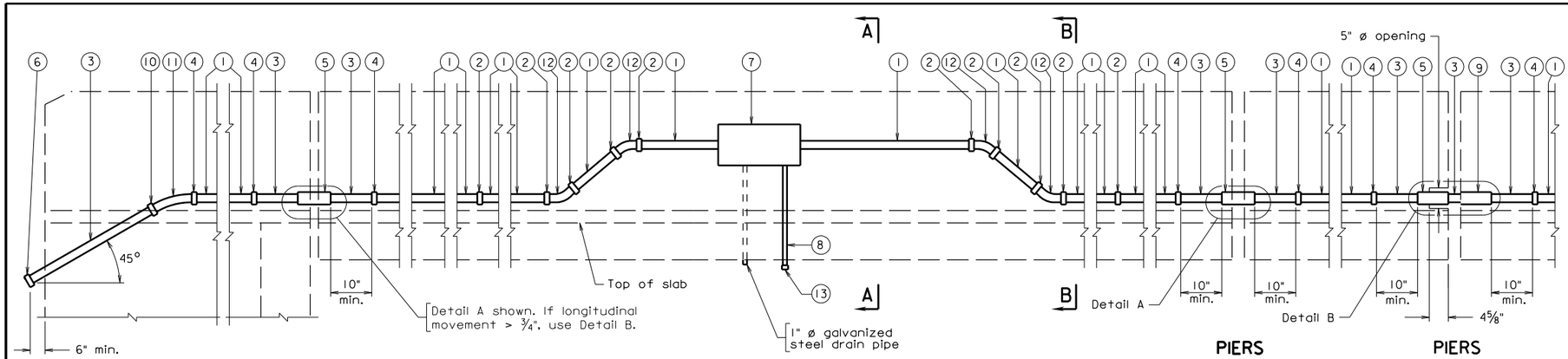

CONDUIT LAYOUT

Scale: ¾" = 1'-0"

Notes:

Close adherence to the manufacturer's requirements in regard to clearances for the installation of deflection fittings shall be observed.

Junction chamber frame and cover to be galvanized, after fabrication, in accordance with ASTM A123.

Cost of Bridge Conduit System and anchorages shall be included in price bid for parapet.

Longitudinal movement is the maximum amount of movement of the expansion and deflection fitting calculated for placement at 60°F and shall be adjusted in accordance with manufacturer's requirements. The amount of movement shall be increased or decreased for every 10°F temperature drop or rise respectively by t.

The Contractor shall determine all dimensions and details necessary for installation.

Conduit shall be grounded in conformance with Section 700 with grounding materials that conform to Section 238.

1. 2" ø nonmetallic conduit
2. Nonmetallic coupling
3. 2" ø metal conduit
4. Adapter to connect nonmetallic conduit to metal conduit
5. Metal expansion and deflection fitting
6. 2" ø pipe cap
7. 8" x 8" x 1'-4" formed junction chamber
8. 1" ø metal conduit
9. Metal expansion fitting
10. Pipe coupling
11. 2" ø 45° 13" R steel elbow
12. 2" ø 45° 9½" R nonmetallic elbow
13. 1" ø pipe cap

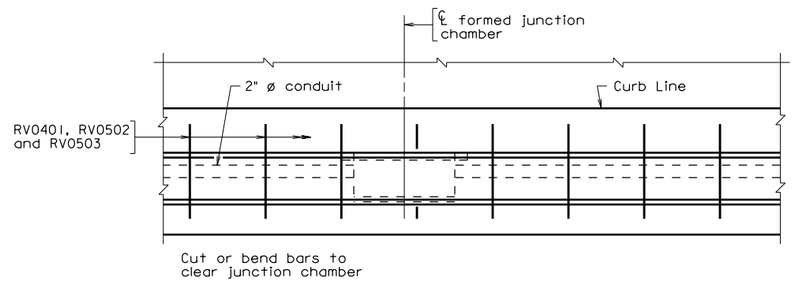

PLAN

Scale: 1" = 1'-0"

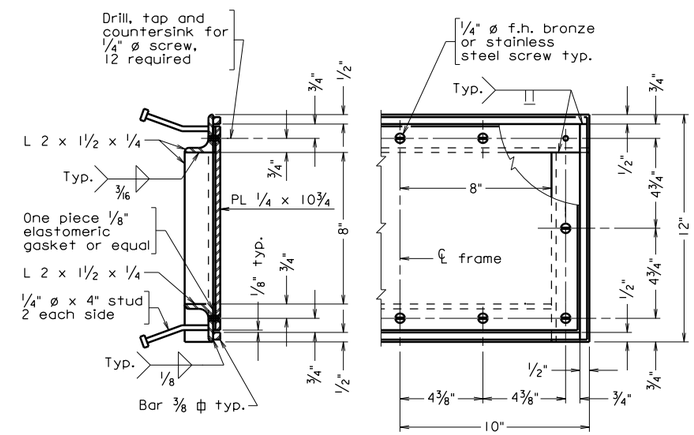

JUNCTION CHAMBER FRAME

Scale: 3" = 1'-0"

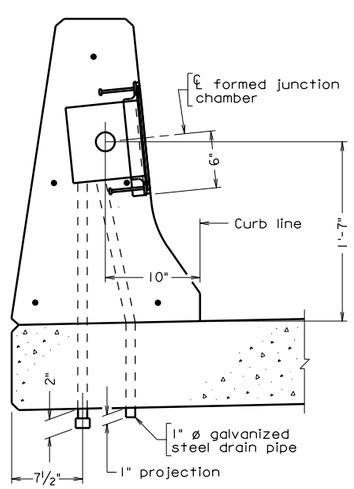

SECTION A-A

Scale: 1½" = 1'-0"

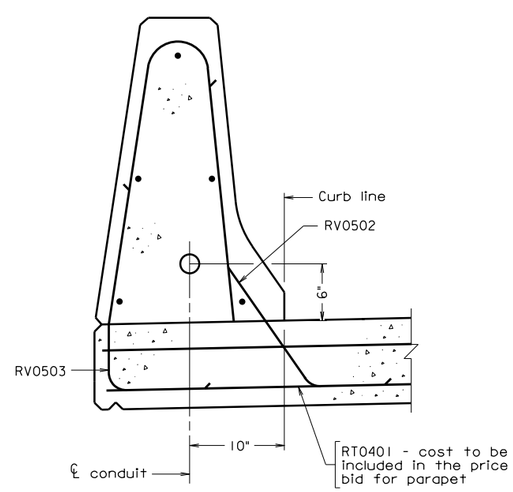

SECTION B-B

Scale: 1½" = 1'-0"

Abutment	Pier	Longitudinal Movement	t	Detail Type

When deck is continuous over pier, expansion and deflection fitting detail is not required.

bcs29a.dgn

06-14-2010

Sealed and Signed by:
Julius F.J. Volgyi Jr.
Lic. No. 010487
On the date of
June 14, 2010

A copy of the original sealed and signed standard drawing is on file in the Central Office.

VDOT S&B DIVISION
RICHMOND, VA
STRUCTURAL ENGINEER

BCS-29A

Scale as noted

©2010, Commonwealth of Virginia

No.	Description	Date
	Revisions	

COMMONWEALTH OF VIRGINIA
DEPARTMENT OF TRANSPORTATION

STRUCTURE AND BRIDGE DIVISION

BRIDGE CONDUIT SYSTEM

Designed: .....
Drawn: ....S&B DIV
Checked: .....

Date

Plan No. BCS-29A

Sheet No.

BRIDGE CONDUIT SYSTEM
OTHER THAN LIGHTING WITH F-SHAPE PARAPET

NOTES TO DESIGNER:

Standard is to be used for miscellaneous bridge conduit system other than bridge lighting, e.g., for lighting signs/sign structures attached to bridge. Details are for use with F-shape parapet. Terminal wall for parapet is located on abutment or U-back wing.

Access to junction box is from the inside of the parapet face on the traffic side. If access is required from the outside of the parapet, use standard BCS-22A.

Size of junction chamber: 8" x 6" x 1'-4". Show location of junction chamber(s) on appropriate plan sheet, normally plan of deck slab. Conduit size: 2" diameter. Show location and size of conduit(s) on transverse section sheet.

For larger conduits the bend radius in the conduit (steel elbow and nonmetallic elbow) and the run of the junction chamber need to be changed in the CONDUIT LAYOUT. The minimum run for the junction chamber is 8 x nominal diameter of conduit. For example, the minimum run for a 2" dia. conduit is 1'-4" (8 x 2" = 16" = 1'-4"). For large diameters, the JUNCTION CHAMBER FRAME needs to be adjusted, i.e., if the run is adjusted, the spacing of the screws also needs to be adjusted.

Longitudinal movement (for filling table):

Coefficient of linear expansion of:

concrete: 0.000006 in./in./°F (AASHTO *Standard Specification for Highway Bridges*, 1996; 1997 and 1998 Interim Specifications; and VDOT modifications, Article 8.5.3)

steel: 0.0000065 in./in./°F (AASHTO *Standard Specification for Highway Bridges*, 1996; 1997 and 1998 Interim Specifications; and VDOT modifications, Article 10.2.2)

Temperature ranges (AASHTO *Standard Specification for Highway Bridges*, 1996; 1997 and 1998 Interim Specifications; and VDOT modifications, Article 3.16):

concrete structures: 40°F
steel structures: 60°F

Example: Steel structure, 250 feet of expansion

Longitudinal movement = 250 x 0.0000065 x 60 = 0.0975 ft = 1 $^{1}/_{8}$ in.
t (movement/10°F) = 250 x 0.0000065 x 10 = 0.01625 ft = $^{3}/_{16}$ in.

ADD THE FOLLOWING NOTES, DIMENSIONS, DETAILS, ETC. TO STANDARD:

<u>TABLE:</u>

Complete table. Use $^{1}/_{8}$" multiples for longitudinal movement. Use $^{1}/_{16}$" multiples for t (movement/10°F).

STATE	FEDERAL AID ROUTE	FEDERAL AID PROJECT	STATE ROUTE	STATE PROJECT	SHEET NO.
VA.	—				

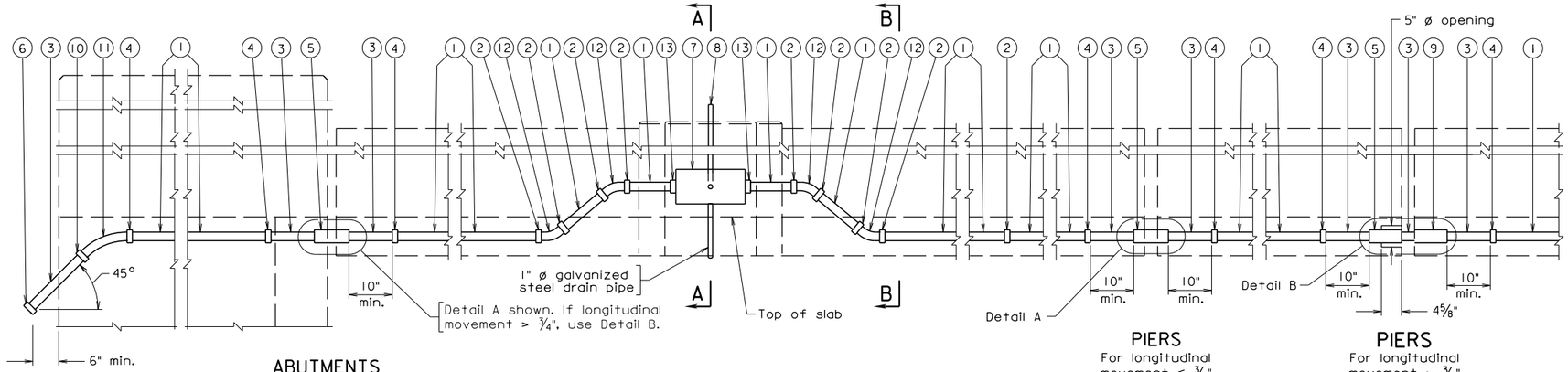

CONDUIT LAYOUT

Scale: ¾" = 1'-0"

1. 2" ø nonmetallic conduit
2. Nonmetallic coupling
3. 2" ø metal conduit
4. Adapter to connect nonmetallic conduit to metal conduit
5. Metal expansion and deflection fitting
6. 2" ø pipe cap
7. 8" x 8" x 1'-4" formed junction chamber
8. 1" ø metal conduit - Furnish locknut and bushing to connect conduit to junction box
9. Metal expansion fitting
10. Pipe coupling
11. 2" ø 45° 13" R steel elbow
12. 2" ø 45° 9½" R nonmetallic elbow
13. Bell fitting or bushing to connect conduit to junction box

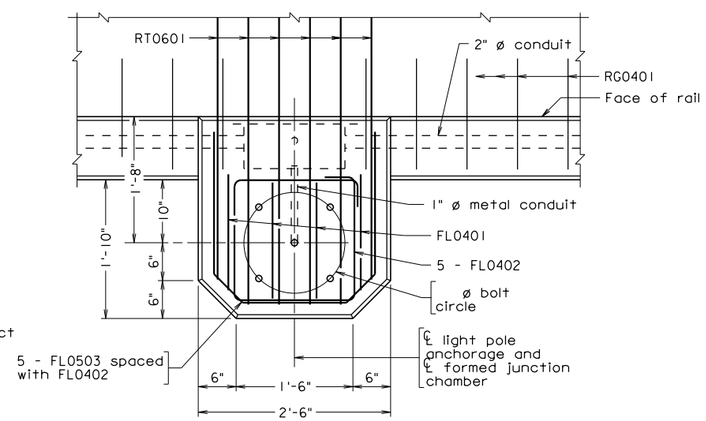

PLAN

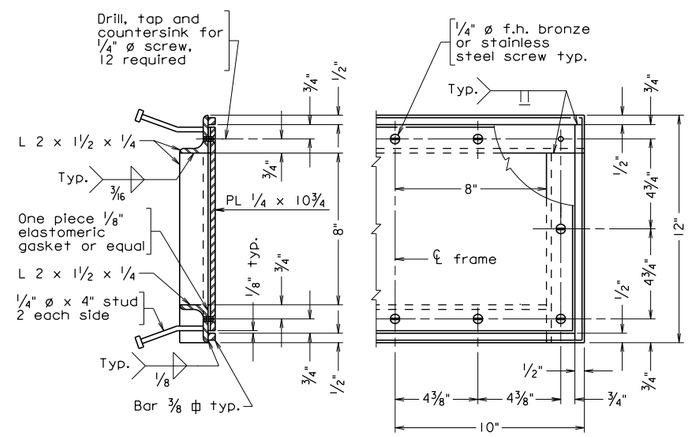

JUNCTION CHAMBER FRAME

Scale: 3" = 1'-0"

Abutment	Pier	Longitudinal Movement	t	Detail Type
·	·	·	·	·
·	·	·	·	·
·	·	·	·	·
·	·	·	·	·
·	·	·	·	·
·	·	·	·	·

When deck is continuous over pier, expansion and deflection fitting detail is not required.

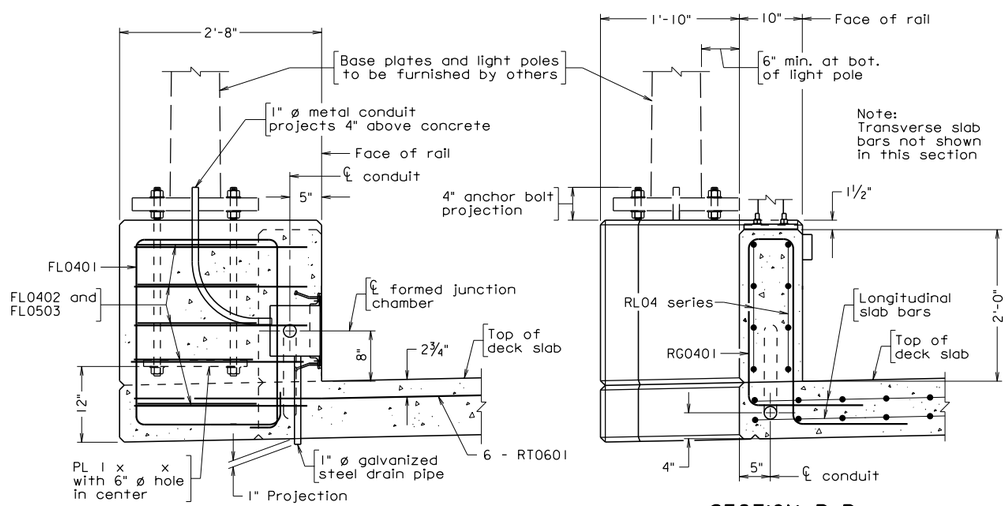

SECTION A-A

SECTION B-B

Notes:

All reinforcing bars shall be Corrosion Resistant Reinforcing Steel, Class __.

Cut or bend bars to clear junction chamber.

Close adherence to the manufacturer's requirements in regard to clearances for the installation of deflection fittings shall be observed.

Junction chamber frame and cover to be galvanized, after fabrication, in accordance with ASTM A123.

Cost of Bridge Conduit System and anchorages shall be included in price bid for railing.

Anchor bolt specification:

Nuts (Top): ASTM F467 Alloy 6262-T9 or 6061-T6,
(Bottom): ASTM A563.
Thread series for all nuts to be UNC-2B.
Washers: (Top): ASTM B209 Alloy Alclad 2024-T3 or T4, 2¼" ø x 0.165".
(Bottom): ASTM F844.
Rods: 1" diameter, ASTM A276, type 430 or 410 annealed, hot finished. Threads on rods may be rolled or cut. 3½" at each end of rod shall be threaded. Each rod shall be supplied with 3 washers and 3 nuts.

In the designations noted above, top refers to hardware above the top of baseplate. Bottom refers to hardware below the baseplate including embedment in concrete.

Longitudinal movement is the maximum amount of movement of the expansion and deflection fitting calculated for placement at 60° F and shall be adjusted in accordance with manufacturer's requirements. The amount of movement shall be increased or decreased for every 10° F temperature drop or rise respectively by t.

The Contractor shall determine all dimensions and details necessary for installation.

Conduit shall be grounded in conformance with Section 700 with grounding materials that conform to Section 238.

Location of light pole shall be adjusted such that anchor bolts of rail post clears the conduit system and the light pole base area.

REINFORCING STEEL SCHEDULE

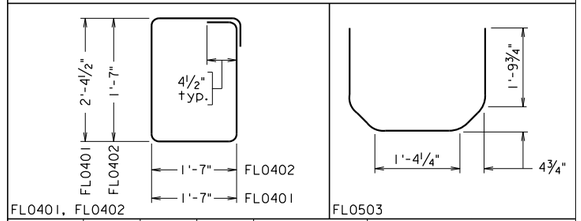

Mark	No.	Size	Pin ø	Length	Location
FL0401	·	#4	2"	8'-3"	Light base
FL0402	·	#4	2"	6'-8"	Light base
FL0503	·	#5	3¾"	6'-0"	Light base
RG0401	⊙	#4	·	·	·
RT0601	·	#6	—	·	Top of deck slab

Dimensions in bending diagram are out-to-out of bars.

⊙ Bars RG0401 are detailed and accounted for on the railing detail sheet (BR27C-series).

bcs30a.dgn

08-07-2012

BCS-30A

Sealed and Signed by:
Julius F.J. Volgyi Jr.
Lic. No. 010487
On the date of
Aug. 7, 2012

A copy of the original sealed and signed standard drawing is on file in the Central Office.

VDOT S&B DIVISION
RICHMOND, VA
STRUCTURAL ENGINEER

No.	Description	Date
	Revisions	

Scale: 1" = 1'-0" unless otherwise shown.

©2012, Commonwealth of Virginia

COMMONWEALTH OF VIRGINIA
DEPARTMENT OF TRANSPORTATION

STRUCTURE AND BRIDGE DIVISION

BRIDGE CONDUIT SYSTEM

Designed: S&B DIV
Drawn: S&B DIV
Checked: S&B DIV

Date

Plan No. BCS-30A

Sheet No.

BRIDGE CONDUIT SYSTEM
FOR LIGHTING WITH STEEL RAILING
BR27C-SERIES WITHOUT SIDEWALK

NOTES TO DESIGNER:

Standard is to be used only when lighting is installed as part of project and used with the Railing standard BR27C-series without sidewalk and when all railings are attached on the traffic side of the rail posts. Terminal wall for the steel railing is located on abutment or U-back wing.

Access to junction chamber is from the inside of the steel railing concrete pedestal face on the traffic side.

Light pole anchorage is designed in accordance with AASHTO *Standard Specifications for Structural Supports for Highway Signs, Luminaires and Traffic Signals*, 4th Edition (2001), including Interim Specifications. Design requirements are as follows:

Pole mounting height: 40 feet
Pole size: avg. 6" O.D. (8" O.D. on base)
Bracket arm: length: 6'-0"; weight of truss: 15 lbs.
Size of luminaire: 3.2 sq. ft.
Weight of luminaire: 81 lbs.
Bolt circle for anchorage (base plate): 11" diameter thru 16" diameter

Light pole anchorage is to be located no closer than 4 feet to abutment (backwall) or parapet joint. Show location of centerline of light pole anchorage(s) on appropriate plan sheet, normally plan of deck slab. The standard provides for adequate pole clearance for placement of the rail on the front or back face of the post.

Size of junction chamber: 8" x 8" x 1'-4". Conduit size: 2" diameter. Show location and size of conduit(s) on transverse section sheet. Show location of junction chambers on appropriate plan sheet, normally plan of deck slab.

For larger conduits the bend radius in the conduit (steel elbow and nonmetallic elbow) and the run of the junction chamber need to be changed in the CONDUIT LAYOUT. The minimum run for the junction chamber is 8 x nominal diameter of conduit. For example, the minimum run for a 2" dia. conduit is 1-4" (8 x 2" = 16" = 1'-4"). If larger conduit is used, JUNCTION CHAMBER FRAME needs to be adjusted, i.e., spacing of screws needs to be adjusted. Also, the size of the concrete blister needs to be adjusted to provide additional space between the junction chamber and the light anchorage.

Longitudinal movement (for filling table):

Coefficient of linear expansion of:

concrete: 0.000006 in./in./°F (AASHTO *Standard Specification for Highway Bridges*, 1996; 1997 and 1998 Interim Specifications; and VDOT modifications, Article 8.5.3)

steel: 0.0000065 in./in./°F (AASHTO *Standard Specification for Highway Bridges*, 1996; 1997 and 1998 Interim Specifications; and VDOT modifications, Article 10.2.2)

BRIDGE CONDUIT SYSTEM
FOR LIGHTING WITH STEEL RAILING
BR27C-SERIES WITHOUT SIDEWALK

NOTES TO DESIGNER (cont'd):

Temperature ranges (AASHTO *Standard Specification for Highway Bridges*, 1996; 1997 and 1998 Interim Specifications; and VDOT modifications, Article 3.16):

concrete structures: 40°F
steel structures: 60°F

Example: Steel structure, 250 feet of expansion

Longitudinal movement = 250 x 0.0000065 x 60 = 0.0975 ft = 1 $^{1}/_{8}$ in.
t (movement/10°F) = 250 x 0.0000065 x 10 = 0.01625 ft = $^{3}/_{16}$ in.

ADD THE FOLLOWING NOTES, DIMENSIONS, DETAILS, ETC. TO STANDARD:

PLAN:

Add diameter of bolt circle.

SECTION A-A:

Add size of plate.

TABLE:

Complete table. Use $^{1}/_{8}$" multiples for longitudinal movement. Use $^{1}/_{16}$" multiples for t (movement/10°F).

For reinforcing steel schedule, complete the No. (number of bars) column.
For RT0601, input the length of bar.

NOTES:

Complete first note by adding the Class I, II or III of corrosion resistant reinforcing steel required. For additional information on corrosion resistant reinforcing steel (CRR), see Structure and Bridge Division Memorandum (current IIM-S&B-81).

STATE	FEDERAL AID ROUTE	FEDERAL AID PROJECT	STATE ROUTE	STATE PROJECT	SHEET NO.
VA.	—				

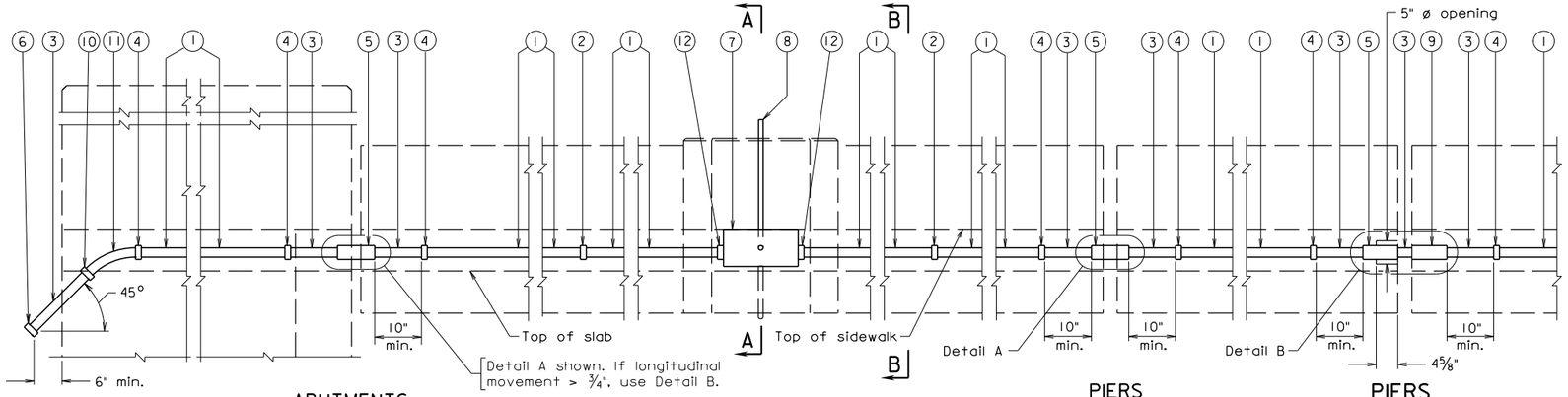

ABUTMENTS

CONDUIT LAYOUT
Scale: ¾" = 1'-0"
(Railing not shown)

PIERS
For longitudinal movement ≤ ¾"

PIERS
For longitudinal movement > ¾"

1. 2" ø nonmetallic conduit
2. Nonmetallic coupling
3. 2" ø metal conduit
4. Adapter to connect nonmetallic conduit to metal conduit
5. Metal expansion and deflection fitting
6. 2" ø pipe cap
7. 8" x 8" x 1'-4" junction box
8. 1" ø metal conduit. Furnish locknut and bushing to connect conduit to junction box.
9. Metal expansion fitting
10. Pipe coupling
11. 2" ø 45° 13" R steel elbow
12. Bell fitting or bushing to connect conduit to junction box

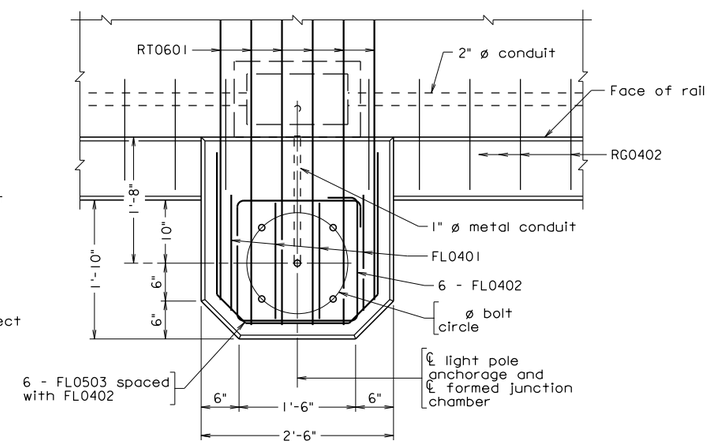

PLAN

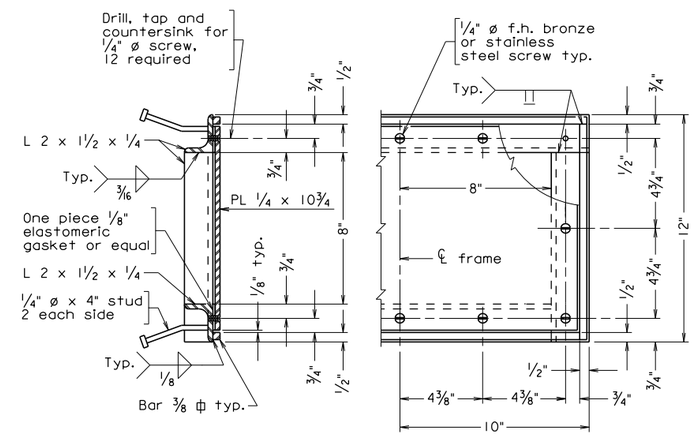

JUNCTION CHAMBER FRAME
Scale: 3" = 1'-0"

Abutment	Pier	Longitudinal Movement	t	Detail Type
·	·	·	·	·
·	·	·	·	·
·	·	·	·	·
·	·	·	·	·
·	·	·	·	·
·	·	·	·	·

When deck is continuous over pier, expansion and deflection fitting detail is not required.

Notes:

All reinforcing bars shall be Corrosion Resistant Reinforcing Steel, Class __.

Cut or bend bars to clear junction chamber.

Close adherence to the manufacturer's requirements in regard to clearances for the installation of deflection fittings shall be observed.

Junction chamber frame and cover to be galvanized, after fabrication, in accordance with ASTM A123.

Cost of Bridge Conduit System and anchorages shall be included in price bid for railing.

Anchor bolt specification:

Nuts (Top): ASTM F467 Alloy 6262-T9 or 6061-T6.
(Bottom): ASTM A563.
Thread series for all nuts to be UNC-2B.
Washers: (Top): ASTM B209 Alloy Alclad 2024-T3 or T4, 2¼" ø x 0.165".
(Bottom): ASTM F844.
Rods: 1" diameter, ASTM A276, type 430 or 410 annealed, hot finished. Threads on rods may be rolled or cut. 3½" at each end of rod shall be threaded. Each rod shall be supplied with 3 washers and 3 nuts.

In the designations noted above, top refers to hardware above the top of baseplate. Bottom refers to hardware below the baseplate including embedment in concrete.

Longitudinal movement is the maximum amount of movement of the expansion and deflection fitting calculated for placement at 60° F and shall be adjusted in accordance with manufacturer's requirements. The amount of movement shall be increased or decreased for every 10° F temperature drop or rise respectively by t.

The Contractor shall determine all dimensions and details necessary for installation.

Conduit shall be grounded in conformance with Section 700 with grounding materials that conform to Section 238.

Location of light pole shall be adjusted such that rail post clears the light pole base area.

REINFORCING STEEL SCHEDULE

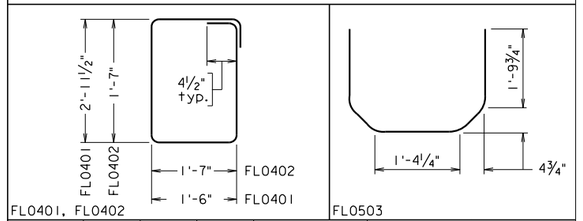

Mark	No.	Size	Pin ø	Length	Location
FL0401	·	#4	2"	9'-5"	Light base
FL0402	·	#4	2"	6'-8"	Light base
FL0503	·	#5	3¾"	6'-0"	Light base
RG0402	⊙	#4	·	·	·
RT0601	·	#6	—	·	Top of deck slab

Dimensions in bending diagram are out-to-out of bars.

⊙ Bars RG0402 are detailed and accounted for on the railing detail sheet (BR27C-series).

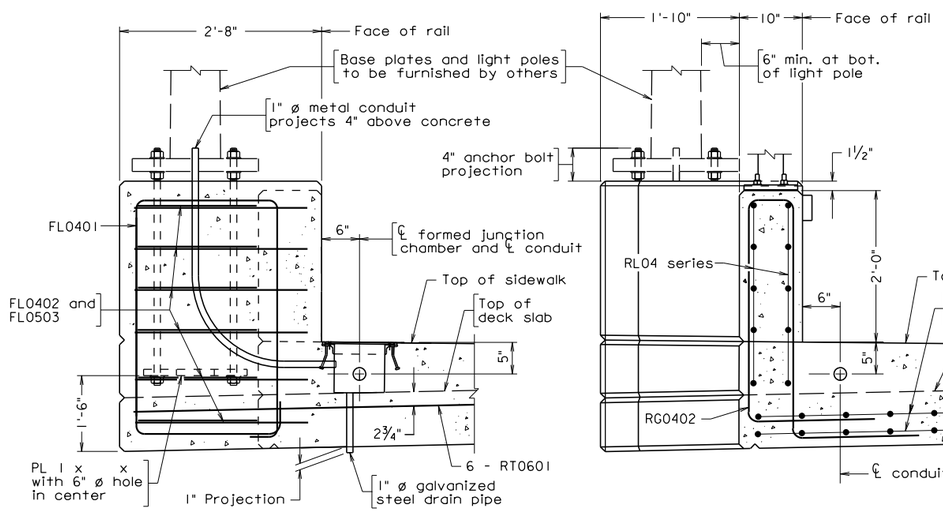

SECTION A-A

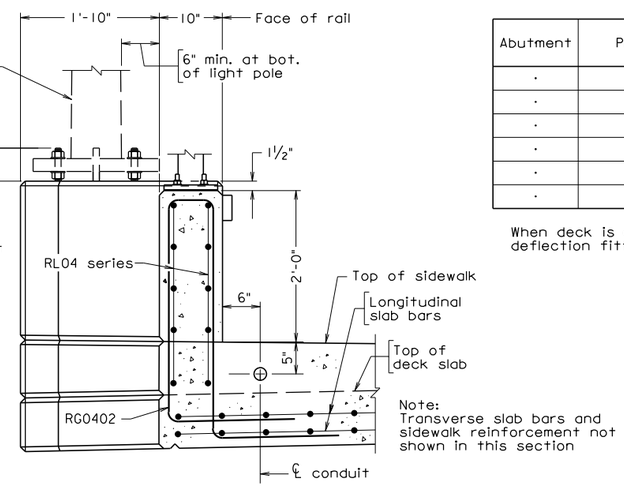

SECTION B-B

Scale: 1" = 1'-0" unless otherwise shown.

© 2012, Commonwealth of Virginia

No.	Description	Date

Revisions

COMMONWEALTH OF VIRGINIA
DEPARTMENT OF TRANSPORTATION

STRUCTURE AND BRIDGE DIVISION

BRIDGE CONDUIT SYSTEM

Designed: S&B DIV
Drawn: S&B DIV
Checked: S&B DIV

Date

Plan No. BCS-31A

Sheet No.

bcs31a.dgn

08-07-2012

Sealed and Signed by:
Julius F.J. Volgyi Jr.
Lic. No. 010487
On the date of
Aug. 7, 2012

A copy of the original sealed and signed standard drawing is on file in the Central Office.

VDOT S&B DIVISION
RICHMOND, VA
STRUCTURAL ENGINEER

BCS-31A

BRIDGE CONDUIT SYSTEM
FOR LIGHTING WITH STEEL RAILING
BR27C-SERIES WITH SIDEWALK

NOTES TO DESIGNER:

Standard is to be used only when lighting is installed as part of project and used with the Railing standard BR27C-series with sidewalk and when all railings are attached on the traffic side of the rail posts. Terminal wall for the steel railing is located on abutment or U-back wing.

Access to junction chamber is on the concrete sidewalk floor

Light pole anchorage is designed in accordance with AASHTO *Standard Specifications for Structural Supports for Highway Signs, Luminaires and Traffic Signals*, 4th Edition (2001), including Interim Specifications. Design requirements are as follows:

Pole mounting height: 40 feet
Pole size: avg. 6" O.D. (8" O.D. on base)
Bracket arm: length: 6'-0"; weight of truss: 15 lbs.

Size of luminaire: 3.2 sq. ft.
Weight of luminaire: 81 lbs.
Bolt circle for anchorage (base plate): 11" diameter thru 16" diameter

Light pole anchorage is to be located no closer than 4 feet to abutment (backwall) or parapet joint. Show location of centerline of light pole anchorage(s) on appropriate plan sheet, normally plan of deck slab. The standard provides for adequate pole clearance for placement of the rail on the front or back face of the post.

Size of junction chamber: 8" x 8" x 1'-4" if there is enough depth in the concrete sidewalk. Conduit size: 2" diameter. Show location and size of conduit(s) on transverse section sheet. Show location of junction chambers on appropriate plan sheet, normally plan of deck slab.

For larger conduits the bend radius in the conduit (steel elbow and nonmetallic elbow) and the run of the junction chamber need to be changed in the CONDUIT LAYOUT. The minimum run for the junction chamber is 8 x nominal diameter of conduit. For example, the minimum run for a 2" dia. conduit is 1-4" (8 x 2" = 16" = 1'-4"). If larger conduit is used, JUNCTION CHAMBER FRAME needs to be adjusted, i.e., spacing of screws needs to be adjusted. Also, the size of the concrete blister needs to be adjusted to provide additional space between the junction chamber and the light anchorage.

Longitudinal movement (for filling table):

Coefficient of linear expansion of:

concrete: 0.000006 in./in./°F (AASHTO *Standard Specification for Highway Bridges*, 1996; 1997 and 1998 Interim Specifications; and VDOT modifications, Article 8.5.3)

steel: 0.0000065 in./in./°F (AASHTO *Standard Specification for Highway Bridges*, 1996; 1997 and 1998 Interim Specifications; and VDOT modifications, Article 10.2.2)

BRIDGE CONDUIT SYSTEM
FOR LIGHTING WITH STEEL RAILING
BR27C-SERIES WITH SIDEWALK

NOTES TO DESIGNER (cont'd):

Temperature ranges (AASHTO *Standard Specification for Highway Bridges*, 1996; 1997 and 1998 Interim Specifications; and VDOT modifications, Article 3.16):

concrete structures: 40°F
steel structures: 60°F

Example: Steel structure, 250 feet of expansion

Longitudinal movement = 250 x 0.0000065 x 60 = 0.0975 ft = 1 $^{1}/_{8}$ in.
t (movement/10°F) = 250 x 0.0000065 x 10 = 0.01625 ft = $^{3}/_{16}$ in.

ADD THE FOLLOWING NOTES, DIMENSIONS, DETAILS, ETC. TO STANDARD:

PLAN:

Add diameter of bolt circle.

SECTION A-A:

Add size of plate.

TABLE:

Complete table. Use $^{1}/_{8}$" multiples for longitudinal movement. Use $^{1}/_{16}$" multiples for t (movement/10°F).

For reinforcing steel schedule, complete the No. (number of bars) column.
For RT0601, input the length of bar.

NOTES:

Complete first note by adding the Class I, II or III of corrosion resistant reinforcing steel required. For additional information on corrosion resistant reinforcing steel (CRR), see Structure and Bridge Division Memorandum (current IIM-S&B-81).

STATE	FEDERAL AID ROUTE	FEDERAL AID PROJECT	STATE ROUTE	STATE PROJECT	SHEET NO.
VA.	—				

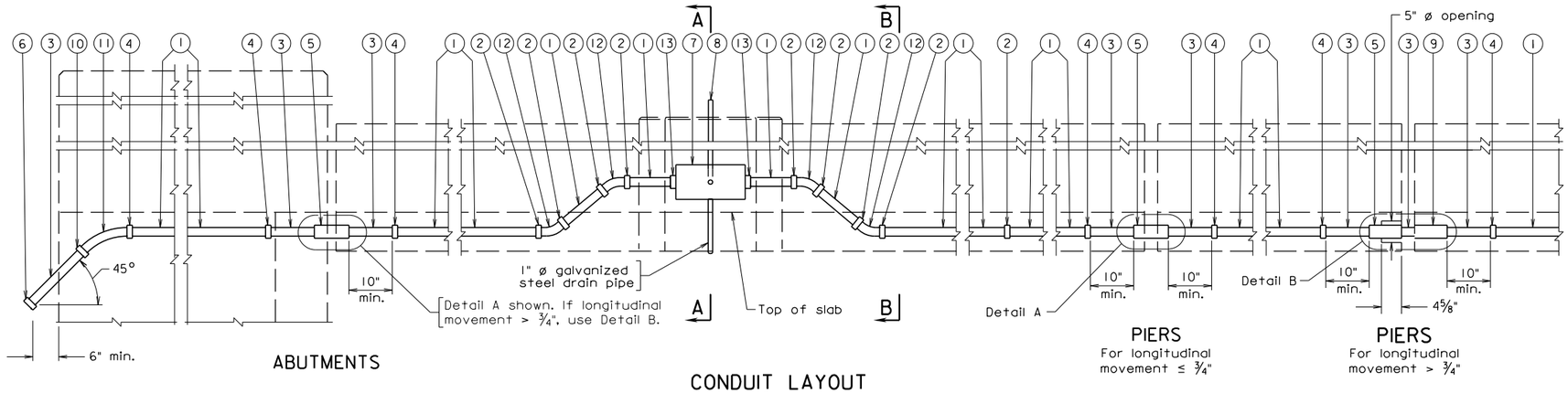

CONDUIT LAYOUT

Scale: ¾" = 1'-0"

1. 2" ø nonmetallic conduit
2. Nonmetallic coupling
3. 2" ø metal conduit
4. Adapter to connect nonmetallic conduit to metal conduit
5. Metal expansion and deflection fitting
6. 2" ø pipe cap
7. 8" x 8" x 1'-4" formed junction chamber
8. 1" ø metal conduit - Furnish locknut and bushing to connect conduit to junction box
9. Metal expansion fitting
10. Pipe coupling
11. 2" ø 45° 13" R steel elbow
12. 2" ø 45° 9½" R nonmetallic elbow
13. Bell fitting or bushing to connect conduit to junction box

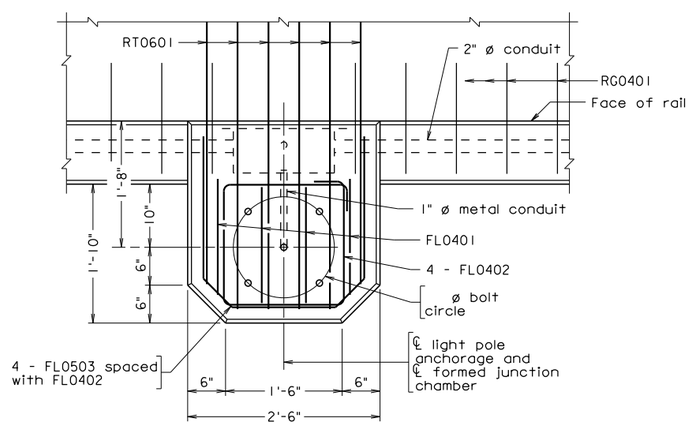

PLAN

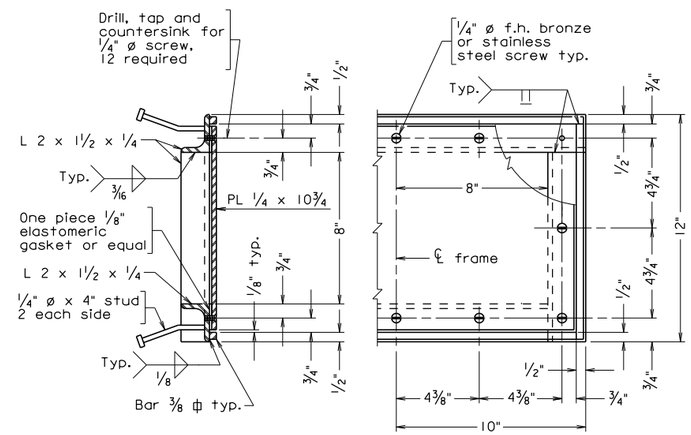

JUNCTION CHAMBER FRAME

Scale: 3" = 1'-0"

Abutment	Pier	Longitudinal Movement	t	Detail Type
·	·	·	·	·
·	·	·	·	·
·	·	·	·	·
·	·	·	·	·
·	·	·	·	·
·	·	·	·	·

When deck is continuous over pier, expansion and deflection fitting detail is not required.

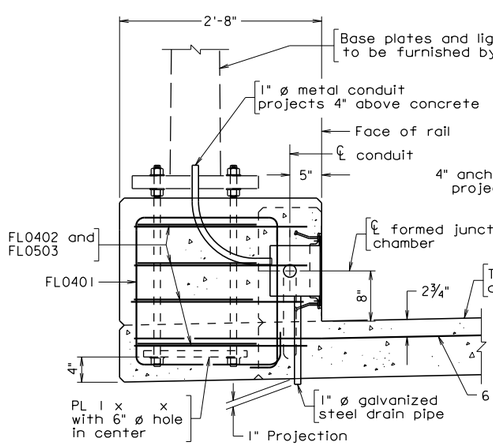

SECTION A-A

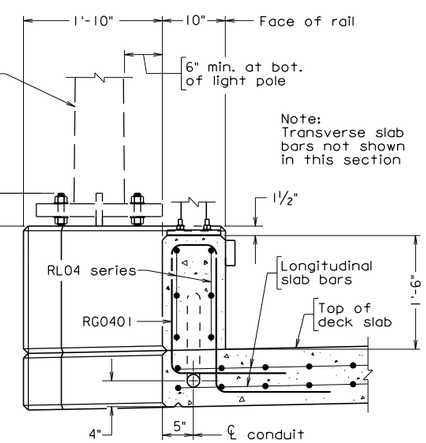

SECTION B-B

Notes:

All reinforcing bars shall be Corrosion Resistant Reinforcing Steel, Class __.

Cut or bend bars to clear junction chamber.

Close adherence to the manufacturer's requirements in regard to clearances for the installation of deflection fittings shall be observed.

Junction chamber frame and cover to be galvanized, after fabrication, in accordance with ASTM A123.

Cost of Bridge Conduit System and anchorages shall be included in price bid for railing.

Anchor bolt specification:

Nuts (Top): ASTM F467 Alloy 6262-T9 or 6061-T6.
(Bottom): ASTM A563.
Thread series for all nuts to be UNC-2B.
Washers: (Top): ASTM B209 Alloy Alclad 2024-T3 or T4, 2¼" ø x 0.165".
(Bottom): ASTM F844.
Rods: 1" diameter, ASTM A276, type 430 or 410 annealed, hot finished. Threads on rods may be rolled or cut. 3½" at each end of rod shall be threaded. Each rod shall be supplied with 3 washers and 3 nuts.

In the designations noted above, top refers to hardware above the top of baseplate. Bottom refers to hardware below the baseplate including embedment in concrete.

Longitudinal movement is the maximum amount of movement of the expansion and deflection fitting calculated for placement at 60° F and shall be adjusted in accordance with manufacturer's requirements. The amount of movement shall be increased or decreased for every 10° F temperature drop or rise respectively by t.

The Contractor shall determine all dimensions and details necessary for installation.

Conduit shall be grounded in conformance with Section 700 with grounding materials that conform to Section 238.

Location of light pole shall be adjusted such that anchor bolts of rail post clear the conduit system and the light pole base area.

REINFORCING STEEL SCHEDULE

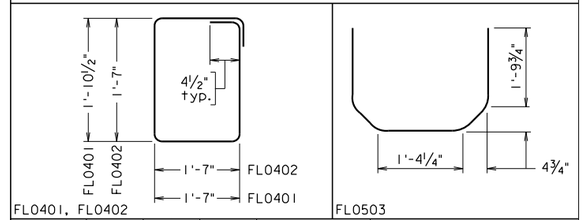

Mark	No.	Size	Pin ø	Length	Location
FL0401	·	#4	2"	7'-3"	Light base
FL0402	·	#4	2"	6'-8"	Light base
FL0503	·	#5	3¾"	6'-0"	Light base
RG0401	⊙	#4	·	·	·
RT0601	·	#6	—	·	Top of deck slab

Dimensions in bending diagram are out-to-out of bars.

⊙ Bars RG0401 are detailed and accounted for on the railing detail sheet (BR27D-series).

bcs32a.dgn

08-07-2012

BCS-32A

Sealed and Signed by: Julius F.J. Volgyi Jr. Lic. No. 010487 On the date of Aug. 7, 2012

A copy of the original sealed and signed standard drawing is on file in the Central Office.

VDOT S&B DIVISION
RICHMOND, VA
STRUCTURAL ENGINEER

No.	Description	Date

Revisions

COMMONWEALTH OF VIRGINIA
DEPARTMENT OF TRANSPORTATION

STRUCTURE AND BRIDGE DIVISION

BRIDGE CONDUIT SYSTEM

Designed: S&B DIV
Drawn: S&B DIV
Checked: S&B DIV

Date

Plan No. BCS-32A

Sheet No.

Scale: 1" = 1'-0" unless otherwise shown.

© 2012, Commonwealth of Virginia

BRIDGE CONDUIT SYSTEM
FOR LIGHTING WITH STEEL RAILING
BR27D-SERIES WITHOUT SIDEWALK

NOTES TO DESIGNER:

Standard is to be used only when lighting is installed as part of project and used with the Railing standard BR27D-series without sidewalk and when all railings are attached on the traffic side of the rail posts. Terminal wall for the steel railing is located on abutment or U-back wing.

Access to junction chamber is from the inside of the steel railing concrete pedestal face on the traffic side.

Light pole anchorage is designed in accordance with AASHTO *Standard Specifications for Structural Supports for Highway Signs, Luminaires and Traffic Signals*, 4th Edition (2001), including Interim Specifications. Design requirements are as follows:

Pole mounting height: 40 feet
Pole size: avg. 6" O.D. (8" O.D. on base)
Bracket arm: length: 6'-0"; weight of truss: 15 lbs.
Size of luminaire: 3.2 sq. ft.
Weight of luminaire: 81 lbs.
Bolt circle for anchorage (base plate): 11" diameter thru 16" diameter

Light pole anchorage is to be located no closer than 4 feet to abutment (backwall) or parapet joint. Show location of centerline of light pole anchorage(s) on appropriate plan sheet, normally plan of deck slab. The standard provides for adequate pole clearance for placement of the rail on the front or back face of the post.

Size of junction chamber: 8" x 8" x 1'-4". Conduit size: 2" diameter. Show location and size of conduit(s) on transverse section sheet. Show location of junction chambers on appropriate plan sheet, normally plan of deck slab.

For larger conduits the bend radius in the conduit (steel elbow and nonmetallic elbow) and the run of the junction chamber need to be changed in the CONDUIT LAYOUT. The minimum run for the junction chamber is 8 x nominal diameter of conduit. For example, the minimum run for a 2" dia. conduit is 1-4" (8 x 2" = 16" = 1'-4"). If larger conduit is used, JUNCTION CHAMBER FRAME needs to be adjusted, i.e., spacing of screws needs to be adjusted. Also, the size of the concrete blister needs to be adjusted to provide additional space between the junction chamber and the light anchorage.

Longitudinal movement (for filling table):

Coefficient of linear expansion of:

concrete: 0.000006 in./in./°F (AASHTO *Standard Specification for Highway Bridges*, 1996; 1997 and 1998 Interim Specifications; and VDOT modifications, Article 8.5.3)

steel: 0.0000065 in./in./°F (AASHTO *Standard Specification for Highway Bridges*, 1996; 1997 and 1998 Interim Specifications; and VDOT modifications, Article 10.2.2)

NOTES TO DESIGNER (cont'd):

Temperature ranges (AASHTO *Standard Specification for Highway Bridges*, 1996; 1997 and 1998 Interim Specifications; and VDOT modifications, Article 3.16):

concrete structures: 40°F
steel structures: 60°F

Example: Steel structure, 250 feet of expansion

Longitudinal movement = 250 x 0.0000065 x 60 = 0.0975 ft = 1 $^{1}/_{8}$ in.
t (movement/10°F) = 250 x 0.0000065 x 10 = 0.01625 ft = $^{3}/_{16}$ in.

ADD THE FOLLOWING NOTES, DIMENSIONS, DETAILS, ETC. TO STANDARD:

PLAN:

Add diameter of bolt circle.

SECTION A-A:

Add size of plate.

TABLE:

Complete table. Use $^{1}/_{8}$" multiples for longitudinal movement. Use $^{1}/_{16}$" multiples for t (movement/10°F).

For reinforcing steel schedule, complete the No. (number of bars) column.
For RT0601, input the length of bar.

NOTES:

Complete first note by adding the Class I, II or III of corrosion resistant reinforcing steel required. For additional information on corrosion resistant reinforcing steel (CRR), see Structure and Bridge Division Memorandum (current IIM-S&B-81).

STATE	FEDERAL AID ROUTE	FEDERAL AID PROJECT	STATE ROUTE	STATE PROJECT	SHEET NO.
VA.	—				

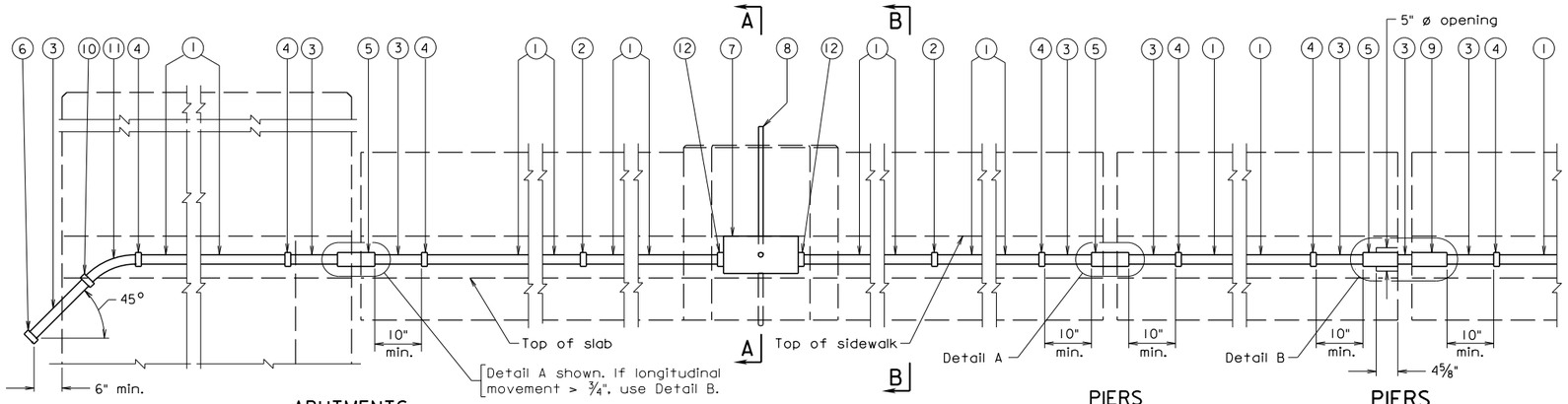

CONDUIT LAYOUT

Scale: ¾" = 1'-0"
(Railing not shown)

1. 2" ø nonmetallic conduit
2. Nonmetallic coupling
3. 2" ø metal conduit
4. Adapter to connect nonmetallic conduit to metal conduit
5. Metal expansion and deflection fitting
6. 2" ø pipe cap
7. 8" x 8" x 1'-4" junction box
8. 1" ø metal conduit. Furnish locknut and bushing to connect conduit to junction box.
9. Metal expansion fitting
10. Pipe coupling
11. 2" ø 45° 13" R steel elbow
12. Bell fitting or bushing to connect conduit to junction box

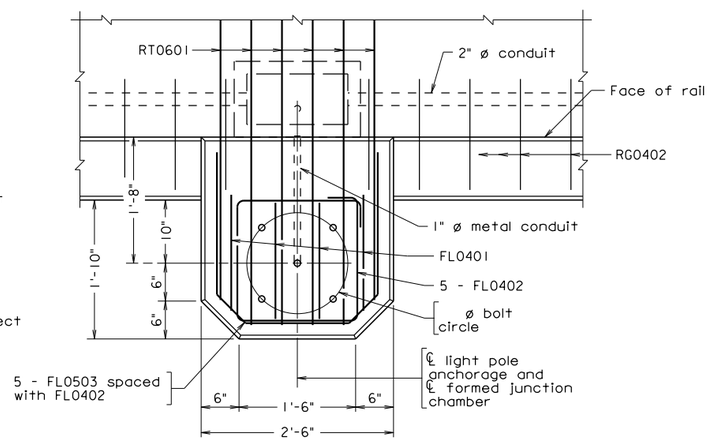

PLAN

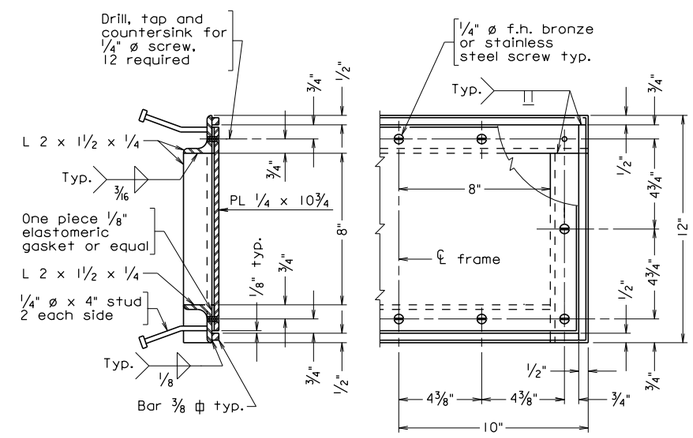

JUNCTION CHAMBER FRAME

Scale: 3" = 1'-0"

Abutment	Pier	Longitudinal Movement	t	Detail Type
·	·	·	·	·
·	·	·	·	·
·	·	·	·	·
·	·	·	·	·
·	·	·	·	·
·	·	·	·	·

When deck is continuous over pier, expansion and deflection fitting detail is not required.

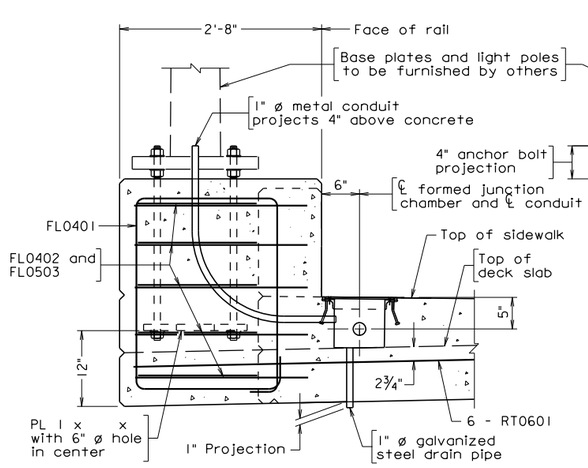

SECTION A-A

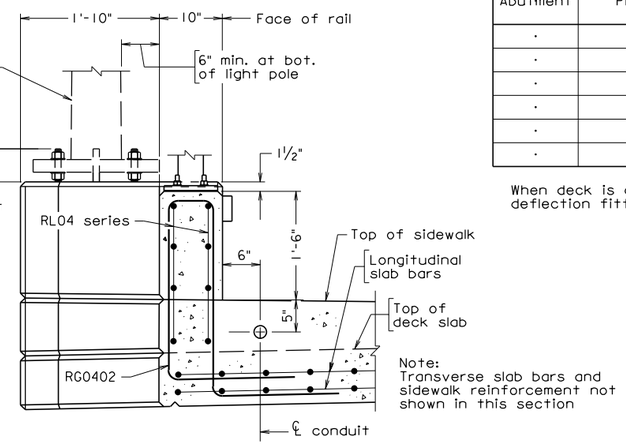

SECTION B-B

Scale: 1" = 1'-0" unless otherwise shown.

Notes:

All reinforcing bars shall be Corrosion Resistant Reinforcing Steel, Class __.

Cut or bend bars to clear junction chamber.

Close adherence to the manufacturer's requirements in regard to clearances for the installation of deflection fittings shall be observed.

Junction chamber frame and cover to be galvanized, after fabrication, in accordance with ASTM A123.

Cost of Bridge Conduit System and anchorages shall be included in price bid for railing.

Anchor bolt specification:

Nuts (Top): ASTM F467 Alloy 6262-T9 or 6061-T6.
(Bottom): ASTM A563.
Thread series for all nuts to be UNC-2B.
Washers: (Top): ASTM B209 Alloy Alclad 2024-T3 or T4, 2¼" ø x 0.165".
(Bottom): ASTM F844.
Rods: 1" diameter, ASTM A276, type 430 or 410 annealed, hot finished. Threads on rods may be rolled or cut. 3½" at each end of rod shall be threaded. Each rod shall be supplied with 3 washers and 3 nuts.

In the designations noted above, top refers to hardware above the top of baseplate. Bottom refers to hardware below the baseplate including embedment in concrete.

Longitudinal movement is the maximum amount of movement of the expansion and deflection fitting calculated for placement at 60° F and shall be adjusted in accordance with manufacturer's requirements. The amount of movement shall be increased or decreased for every 10° F temperature drop or rise respectively by t.

The Contractor shall determine all dimensions and details necessary for installation.

Conduit shall be grounded in conformance with Section 700 with grounding materials that conform to Section 238.

Location of light pole shall be adjusted such that rail post clears the light pole base area.

REINFORCING STEEL SCHEDULE

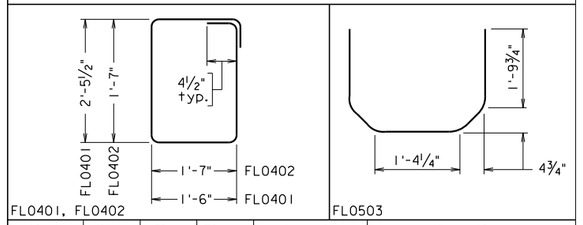

Mark	No.	Size	Pin ø	Length	Location
FL0401	·	#4	2"	8'-5"	Light base
FL0402	·	#4	2"	6'-8"	Light base
FL0503	·	#5	3¾"	6'-0"	Light base
RG0402	⊙	#4	·	·	
RT0601	·	#6	—	·	Top of deck slab

Dimensions in bending diagram are out-to-out of bars.

⊙ Bars RG0402 are detailed and accounted for on the railing detail sheet (BR27D-series).

bcs33a.dgn

08-07-2012

BCS-33A

Sealed and Signed by:
Julius F.J. Volgyi Jr.
Lic. No. 010487
On the date of
Aug. 7, 2012

A copy of the original sealed and signed standard drawing is on file in the Central Office.

VDOT S&B DIVISION
RICHMOND, VA
STRUCTURAL ENGINEER

No.	Description	Date
	Revisions	

COMMONWEALTH OF VIRGINIA
DEPARTMENT OF TRANSPORTATION

STRUCTURE AND BRIDGE DIVISION

BRIDGE CONDUIT SYSTEM

Designed: S&B DIV
Drawn: S&B DIV
Checked: S&B DIV

Date

Plan No. BCS-33A

Sheet No.

© 2012, Commonwealth of Virginia

BRIDGE CONDUIT SYSTEM
FOR LIGHTING WITH STEEL RAILING
BR27D-SERIES WITH SIDEWALK

NOTES TO DESIGNER:

Standard is to be used only when lighting is installed as part of project and used with the Railing standard BR27D-series with sidewalk and when all railings are attached on the traffic side of the rail posts. Terminal wall for the steel railing is located on abutment or U-back wing.

Access to junction chamber is on the concrete sidewalk floor

Light pole anchorage is designed in accordance with AASHTO *Standard Specifications for Structural Supports for Highway Signs, Luminaires and Traffic Signals*, 4th Edition (2001), including Interim Specifications. Design requirements are as follows:

Pole mounting height: 40 feet
Pole size: avg. 6" O.D. (8" O.D. on base)
Bracket arm: length: 6'-0"; weight of truss: 15 lbs.

Size of luminaire: 3.2 sq. ft.
Weight of luminaire: 81 lbs.
Bolt circle for anchorage (base plate): 11" diameter thru 16" diameter

Light pole anchorage is to be located no closer than 4 feet to abutment (backwall) or parapet joint. Show location of centerline of light pole anchorage(s) on appropriate plan sheet, normally plan of deck slab. The standard provides for adequate pole clearance for placement of the rail on the front or back face of the post.

Size of junction chamber: 8" x 8" x 1'-4" if there is enough depth in the concrete sidewalk. Conduit size: 2" diameter. Show location and size of conduit(s) on transverse section sheet. Show location of junction chambers on appropriate plan sheet, normally plan of deck slab.

For larger conduits the bend radius in the conduit (steel elbow and nonmetallic elbow) and the run of the junction chamber need to be changed in the CONDUIT LAYOUT. The minimum run for the junction chamber is 8 x nominal diameter of conduit. For example, the minimum run for a 2" dia. conduit is 1-4" (8 x 2" = 16" = 1'-4"). If larger conduit is used, JUNCTION CHAMBER FRAME needs to be adjusted, i.e., spacing of screws needs to be adjusted. Also, the size of the concrete blister needs to be adjusted to provide additional space between the junction chamber and the light anchorage.

Longitudinal movement (for filling table):

Coefficient of linear expansion of:

concrete: 0.000006 in./in./°F (AASHTO *Standard Specification for Highway Bridges*, 1996; 1997 and 1998 Interim Specifications; and VDOT modifications, Article 8.5.3)

steel: 0.0000065 in./in./°F (AASHTO *Standard Specification for Highway Bridges*, 1996; 1997 and 1998 Interim Specifications; and VDOT modifications, Article 10.2.2)

BRIDGE CONDUIT SYSTEM
FOR LIGHTING WITH STEEL RAILING
BR27D-SERIES WITH SIDEWALK

NOTES TO DESIGNER (cont'd):

Temperature ranges (AASHTO *Standard Specification for Highway Bridges*, 1996; 1997 and 1998 Interim Specifications; and VDOT modifications, Article 3.16):

concrete structures: 40°F
steel structures: 60°F

Example: Steel structure, 250 feet of expansion

Longitudinal movement = 250 x 0.0000065 x 60 = 0.0975 ft = 1 $^{1}/_{8}$ in.
t (movement/10°F) = 250 x 0.0000065 x 10 = 0.01625 ft = $^{3}/_{16}$ in.

ADD THE FOLLOWING NOTES, DIMENSIONS, DETAILS, ETC. TO STANDARD:

PLAN:

Add diameter of bolt circle.

SECTION A-A:

Add size of plate.

TABLE:

Complete table. Use $^{1}/_{8}$" multiples for longitudinal movement. Use $^{1}/_{16}$" multiples for t (movement/10°F).

For reinforcing steel schedule, complete the No. (number of bars) column.
For RT0601, input the length of bar.

NOTES:

Complete first note by adding the Class I, II or III of corrosion resistant reinforcing steel required. For additional information on corrosion resistant reinforcing steel (CRR), see Structure and Bridge Division Memorandum (current IIM-S&B-81).

STATE	FEDERAL AID ROUTE	FEDERAL AID PROJECT	STATE ROUTE	STATE PROJECT	SHEET NO.
VA.	—				

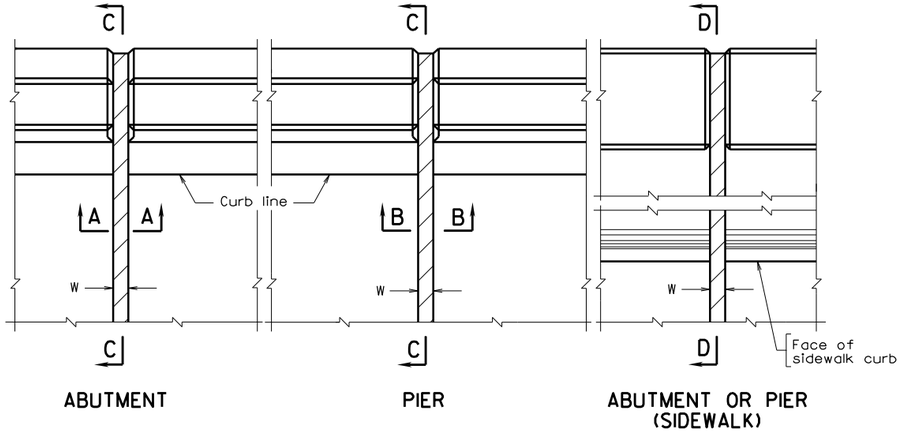

PART PLAN - STRAIGHT CROSSING

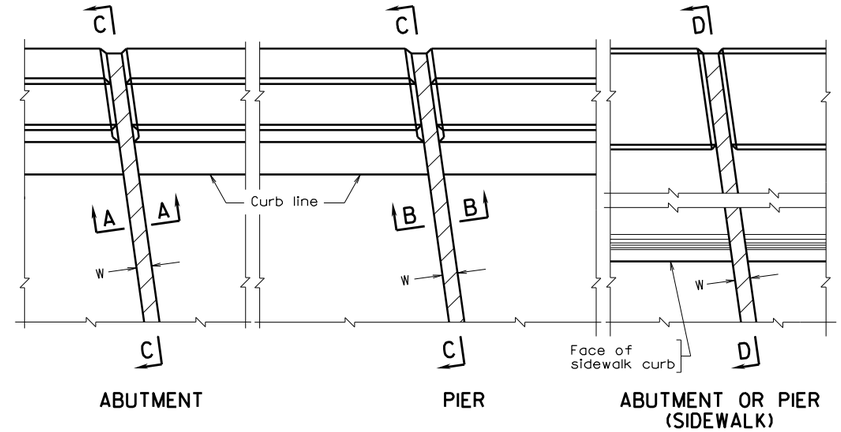

PART PLAN - SKEWED CROSSING

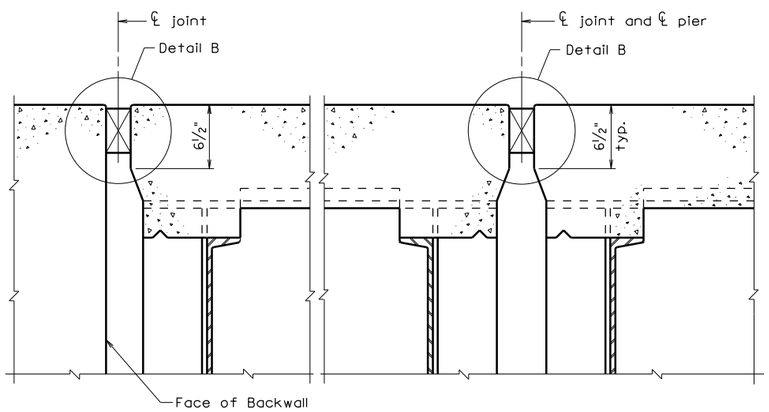

SECTION A-A

SECTION B-B

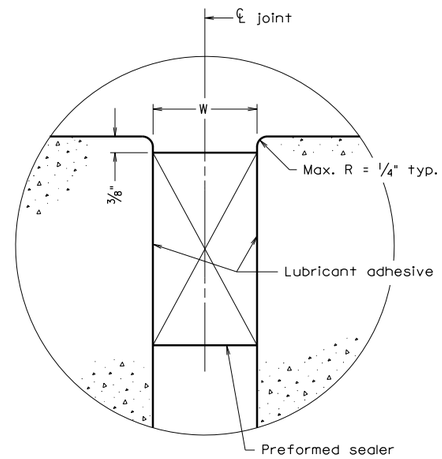

DETAIL B

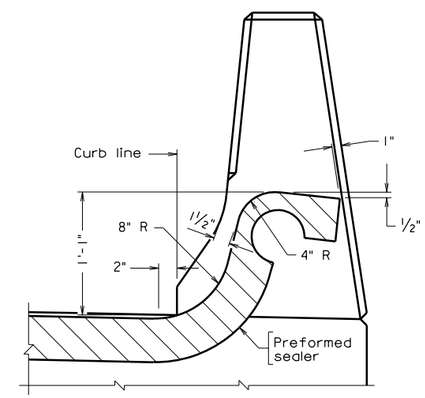

SECTION C-C

Notes:

Section of sealer shown is heavy-duty structural type sealer and may vary slightly depending on manufacturer.

As nearly as possible, sides of joints shall be straight, vertical and parallel. The area of the installation shall be free from cracks and spalls.

Sealer shall be installed in one continuous piece except for sidewalk areas.

Joint width W is the final joint width of the cured concrete when placed at 60°F. The width W shall be increased or decreased for every 10°F temperature drop or rise respectively by t. When formed, joint width W shall be reduced by the amount Δ to compensate for the opening of the joint caused by the deflection of the beam when the deck concrete is placed. If the joint is formed so that the form material will not move and the joint will not open as the deck concrete is placed, then adjustment Δ shall not be made.

Fixed Bearing: $\Delta = \frac{4d \ \Delta's}{L}$

Expansion Bearing: $\Delta = \frac{d \ \Delta's}{L}$

d = Total rotation depth from top of slab to point of rotation on bearing.

Δ's = Deflection of beam at midspan from dead load of concrete deck slab and bolsters. (See Dead Load Delection Diagram.)

L = Length of span.

Δ = Compensation for joint opening due to deflection of beam during placement of concrete deck slab and bolsters for the last span placed adjacent to the joint.

All the dimensions are in the same units.

Abutment	Pier	Sealer Size b	Sealer Depth h	Joint Width W	t
.	.	.	.	.	.
.	.	.	.	.	.
.	.	.	.	.	.
.	.	.	.	.	.
.	.	.	.	.	.
.	.	.	.	.	.
.	.	.	.	.	.
.	.	.	.	.	.
.	.	.	.	.	.
.	.	.	.	.	.
.	.	.	.	.	.
.	.	.	.	.	.

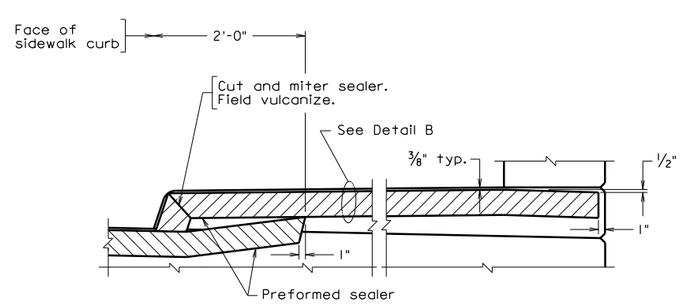

SECTION D-D

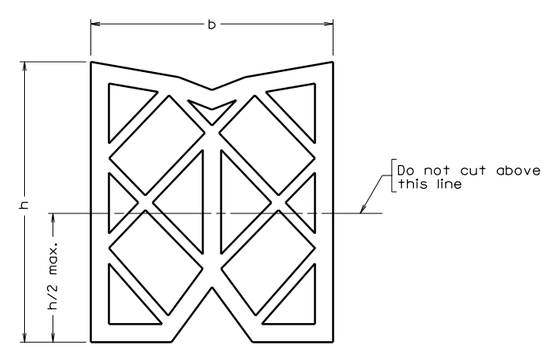

PREFORMED ELASTOMERIC JOINT SEALER
In uncompressed state

Not to scale

©2010, Commonwealth of Virginia

No.	Description	Date

Revisions

COMMONWEALTH OF VIRGINIA
DEPARTMENT OF TRANSPORTATION

STRUCTURE AND BRIDGE DIVISION

JOINT DETAILS

Designed: .....
Drawn: ....S&B DIV
Checked: .....

Date

Plan No. BEJ-1

Sheet No.

bej.dgn

06-14-2010

BEJ-1

VDOT S&B DIVISION
RICHMOND, VA
STRUCTURAL ENGINEER

PREFORMED ELASTOMERIC JOINT DETAILS

STRAIGHT CROSSING AND SKEW UNDER 20°

NOTES TO DESIGNER:

See Manual of the Structure and Bridge Division, Volume V – Part 2, Chapter 14 to determine size of joint required.

Standard to be used for straight crossings and skews ≤ 20°.

ADD THE FOLLOWING NOTES, DIMENSIONS, DETAILS, ETC. TO STANDARD:

Complete table entering as appropriate either abutment or pier designation, sealer size (b), sealer depth (h), joint width (w) and temperature variation per 10°F± (t).

Section D-D:

Modify details as needed for rail type used.

STATE	FEDERAL AID ROUTE	FEDERAL AID PROJECT	STATE ROUTE	STATE PROJECT	SHEET NO.
VA.	—				

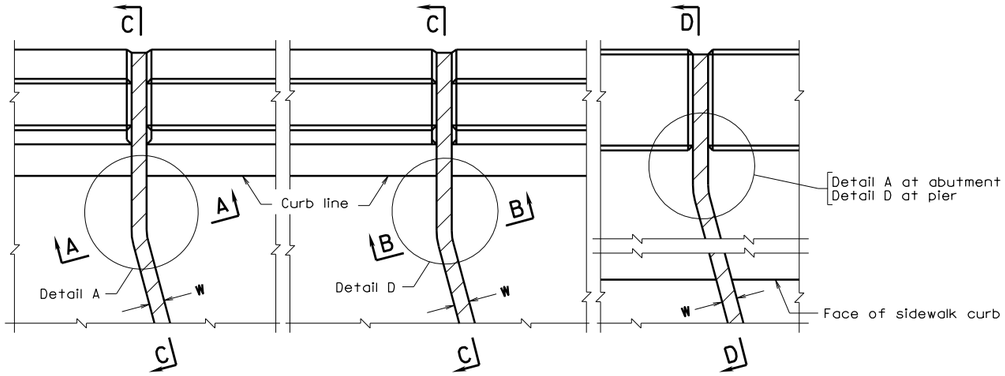

ABUTMENT PIER ABUTMENT OR PIER (SIDEWALK)

PART PLAN

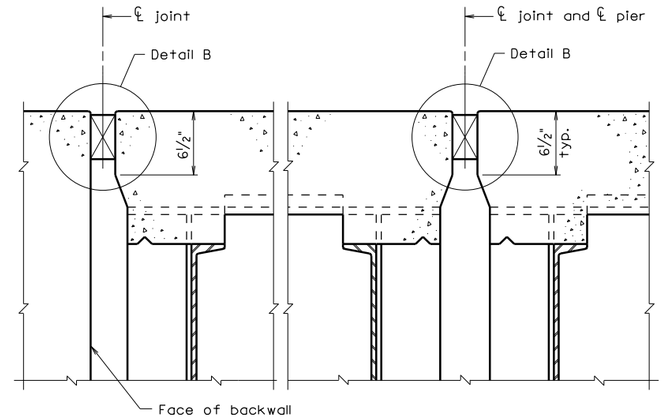

SECTION A-A SECTION B-B

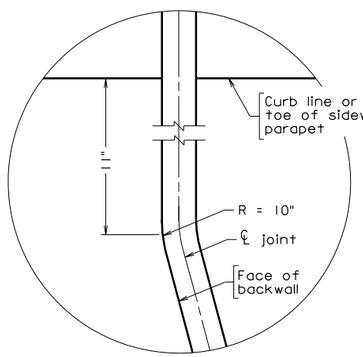

DETAIL A

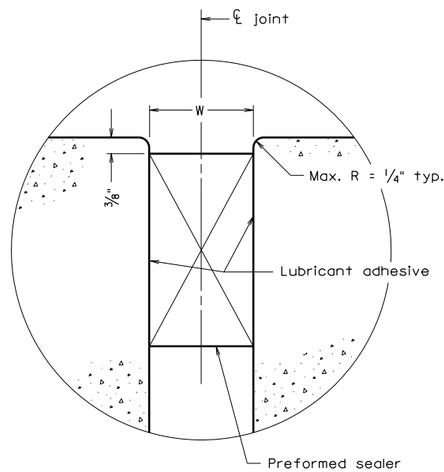

DETAIL B

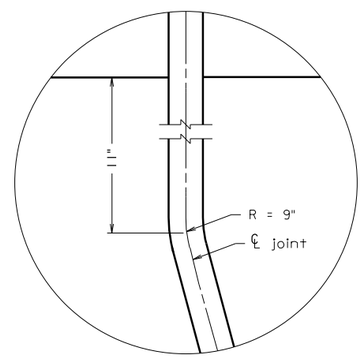

DETAIL D

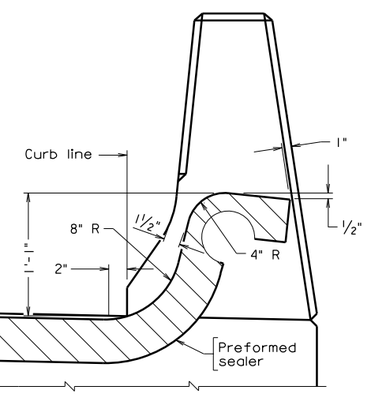

SECTION C-C

Notes:

Section of sealer shown is heavy-duty structural type sealer and may vary slightly depending on manufacturer.

As nearly as possible, sides of joints shall be straight, vertical and parallel. The area of the installation shall be free from cracks and spalls.

Sealer shall be installed in one continuous piece except for sidewalk areas.

Joint width W is the final joint width of the cured concrete when placed at 60°F. The width W shall be increased or decreased for every 10°F temperature drop or rise respectively by t. When formed, joint width W shall be reduced by the amount Δ to compensate for the opening of the joint caused by the deflection of the beam when the deck concrete is placed. If the joint is formed so that the form material will not move and the joint will not open as the deck concrete is placed, then adjustment Δ shall not be made.

Fixed Bearing: $\Delta = \frac{4d \ \Delta's}{L}$

Expansion Bearing: $\Delta = \frac{d \ \Delta's}{L}$

d = Total rotation depth from top of slab to point of rotation on bearing.

Δ's = Deflection of beam at midspan from dead load of concrete deck slab and bolsters. (See Dead Load Delection Diagram.)

L = Length of span.

Δ = Compensation for joint opening due to deflection of beam during placement of concrete deck slab and bolsters for the last span placed adjacent to the joint.

All the dimensions are in the same units.

Abutment	Pier	Sealer Size b	Sealer Depth h	Joint Width W	t
.	.	.	.	.	.
.	.	.	.	.	.
.	.	.	.	.	.
.	.	.	.	.	.
.	.	.	.	.	.
.	.	.	.	.	.
.	.	.	.	.	.
.	.	.	.	.	.
.	.	.	.	.	.
.	.	.	.	.	.
.	.	.	.	.	.
.	.	.	.	.	.

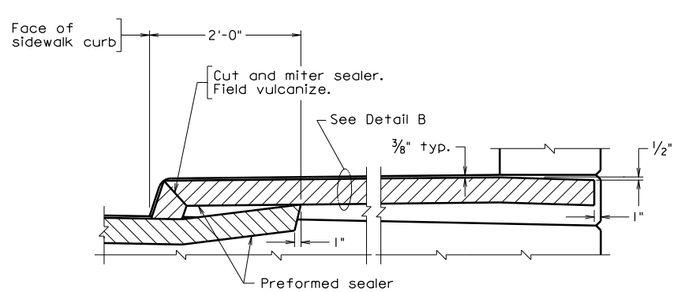

SECTION D-D

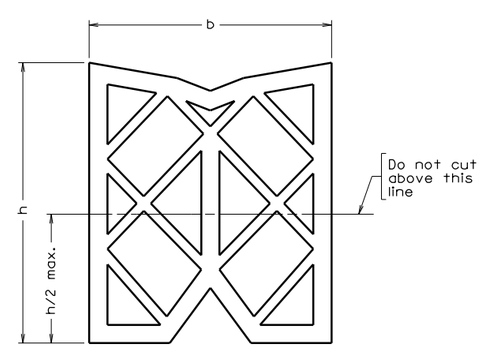

PREFORMED ELASTOMERIC JOINT SEALER
In uncompressed state

Not to scale

©2010, Commonwealth of Virginia

No.	Description	Date
	Revisions	

COMMONWEALTH OF VIRGINIA
DEPARTMENT OF TRANSPORTATION

STRUCTURE AND BRIDGE DIVISION

PREFORMED ELASTOMERIC JOINT DETAILS

Designed: .....
Drawn: ....S&B DIV
Checked: .....

Date	Plan No.	Sheet No.
	BEJ-2	

VDOT S&B DIVISION
RICHMOND, VA
STRUCTURAL ENGINEER

06-14-2010

BEJ-2

bej2.dgn

PREFORMED ELASTOMERIC JOINT DETAILS

SKEWED CROSSING OVER 20°

NOTES TO DESIGNER:

See Manual of the Structure and Bridge Division, Volume V – Part 2, Chapter 14 to determine size of joint required.

Standard to be used for skews > 20°.

ADD THE FOLLOWING NOTES, DIMENSIONS, DETAILS, ETC. TO STANDARD:

Complete table entering as appropriate either abutment or pier designation, sealer size (b), sealer depth (h), joint width (w) and temperature variation per 10°F± (t).

Section D-D:

Modify details as needed for rail type used.

STATE	FEDERAL AID ROUTE	FEDERAL AID PROJECT	STATE ROUTE	STATE PROJECT	SHEET NO.
VA.	—				

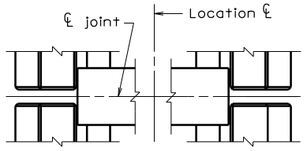

PLAN ELASTOMERIC EXPANSION DAM
Straight crossing

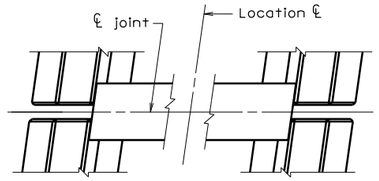

PLAN ELASTOMERIC EXPANSION DAM
Skewed crossing under 10°

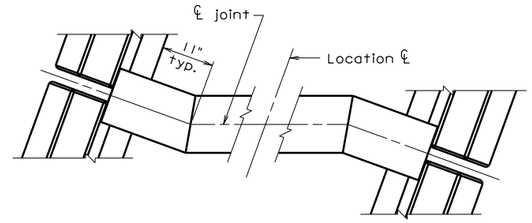

PLAN ELASTOMERIC EXPANSION DAM
Skewed crossing over 10°

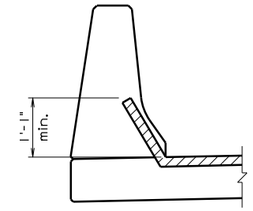

PARAPET SECTION
On ℄ expansion joint

Notes:

Shop drawings of the type of dam(s) selected and corresponding slab opening(s) and anchor details shall be submitted to the Engineer for review in accordance with these details and Section 105.10 of the Specifications.

Top of dam shall be set below top of slab in accordance with manufacturer's recommendation or 1/8", whichever is greater.

Concrete shall be placed beneath the dam in such a manner as to prevent the formation of air pockets in the concrete.

All bolts, nuts, washers and cap screws shall be ASTM A276, Type 304 stainless steel.

Non-stainless ferrous metal shall be ASTM A709, Grade 36 and shall be painted in accordance with Section 411 of the Specifications.

Completely welded curb and gutter sections shall be furnished for Types F2 and I.

Steel sections shall be furnished in minimum lengths of 18' and shall be field welded into continuous sections. Welds shall be ground smooth in areas where they will be in contact with the elastomer.

Where the total length of the joint is less than 40', the minimum length of steel sections shall be half of the total length of the joint.

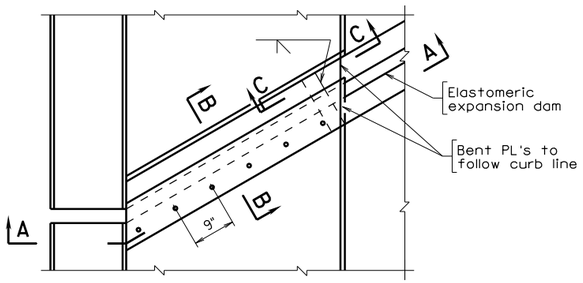

PLAN AT SIDEWALK
Any Skew

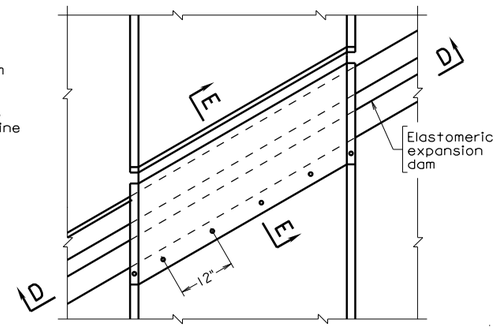

PLAN AT RAISED MEDIAN
(Any Skew)

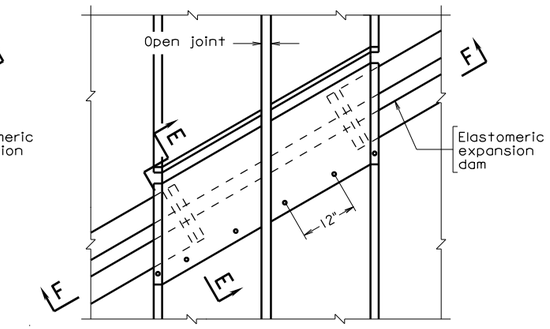

PLAN AT RAISED MEDIAN
WITH LONGITUDINAL JOINT
(Any Skew)

Dam Proprietary Nomenclature:

Type F2 = Acme Strip Seal, On-Flex Strip Seal (Structural Accessories), Steelflex SSC-M (D.S.Brown), E-Poxy Industries S400, & R. J. Watson RJM Strip Seal

Type I = Nonproprietary

Abutment	Pier	Types allowed	A (at 60°F)	t	Total Movement	Skew Angle

"A" shall be increased or decreased for every 10°F temperature drop or rise respectively by "t". "A" is measured perpendicular to the joint centerline.

Total movement is the movement the dam must be capable of providing to allow for the effects of temperature changes, girder end rotation under live load and racking caused by the skew angle.

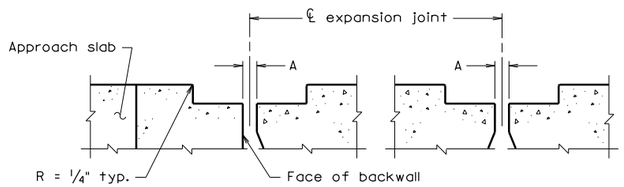

AT ABUTMENT AT PIER
SECTION THROUGH JOINT RECESS

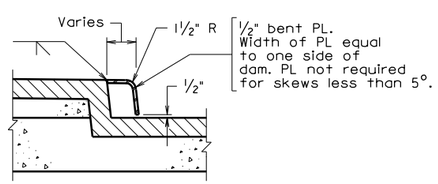

SECTION C-C

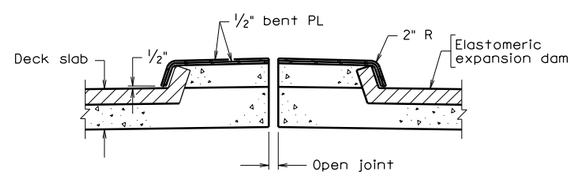

SECTION F-F

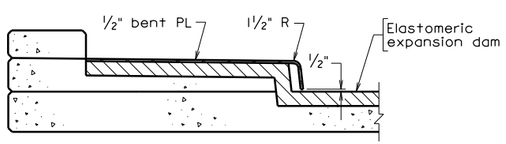

SECTION A-A

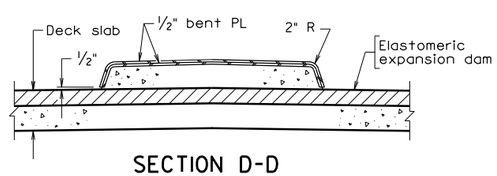

SECTION D-D

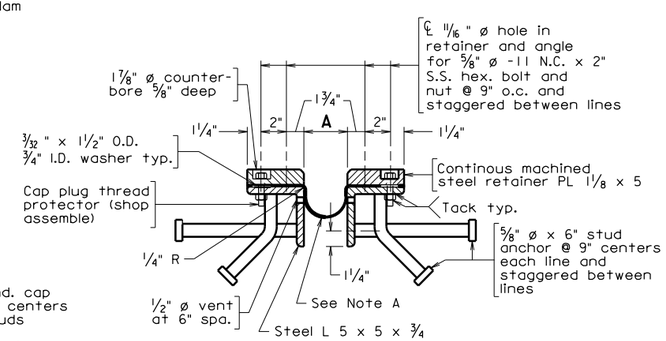

Note A:

1/8" thick continuous synthetic fabric reinforced sheet elastomeric gland: Constant width = 14", 50 or 60 Durometer, and punch 1 1/2" ø holes through gland to match bolt locations

TYPE I
TYPES OF EXPANSION DAMS

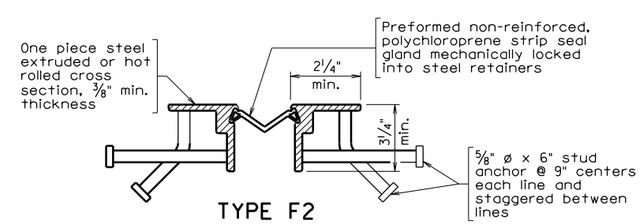

TYPE F2

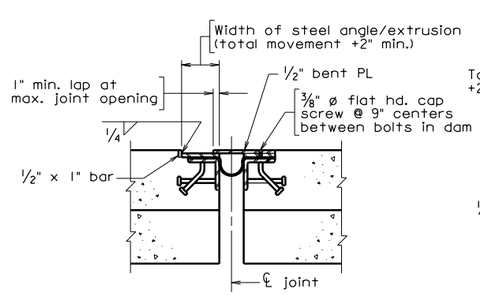

SECTION B-B

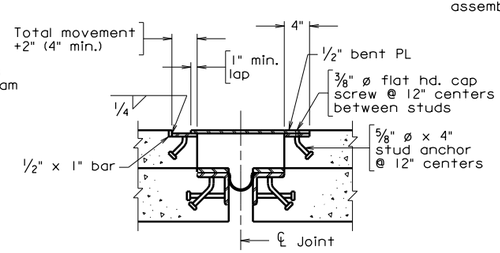

SECTION E-E

No.	Description	Date

Revisions

COMMONWEALTH OF VIRGINIA
DEPARTMENT OF TRANSPORTATION

STRUCTURE AND BRIDGE DIVISION

ELASTOMERIC EXPANSION DAM

Designed: .....
Drawn: ....S&B DIV
Checked: .....

Date	Plan No.	Sheet No.
	BEJ-3	

Not to scale

©2010, Commonwealth of Virginia

bej3.dgn

06-14-2010

BEJ-3

VDOT S&B DIVISION
RICHMOND, VA
STRUCTURAL ENGINEER

ELASTOMERIC EXPANSION DAM

NOTES TO DESIGNER:

Procedure for Selecting Expansion Dam:

1. Determine if preformed elastomeric joint sealer (compression seal) can be used. See Manual of the Structure and Bridge Division, Volume V – Part 2, Chapter 14.

2. If compression sealer cannot be used, determine total longitudinal movement. Convert this to movement perpendicular to joint. All dimensions in these notes are perpendicular to the joint centerline.

3. Check table below for dams that can be used based on total movement and skew angle:

DAM SELECTION CRITERIA		
Type	Manufacturer's Rated Movement Capacity	Allowable Skew Range
F2	0" to 4"	0° - 22°
I	0" to 4"	0° - 22°

Types F2 and I may be used on skews over 22° by using the following procedure to calculate the Total Movement::

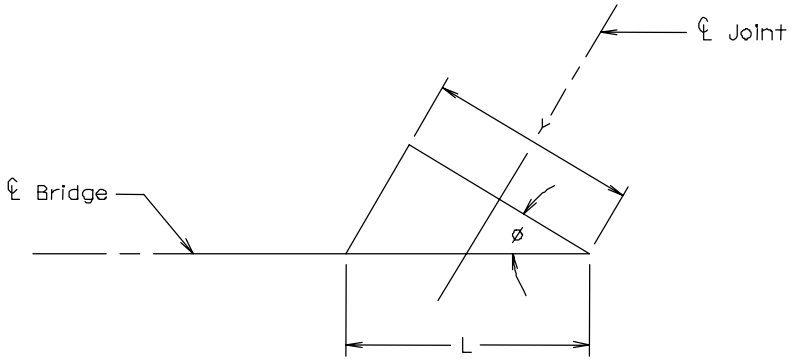

Ø = Skew angle

L = Calculated longitudinal movement

Y = Total movement dam must be capable of providing to allow for the effects of temperature changes and racking caused by the skew angle. (This is not the actual movement and can exceed 3 $^{1}/_{2}$" so long as A_{max} does not.)

Skew	Total Movement (Y)
0° to 22°	L cos Ø
Over 22°	2.5L sin Ø

NOTES TO DESIGNER (cont'd):

Example: Calculated longitudinal movement L = 2".

Skew angle Ø = 40°.

Total movement Y = 2.5L sin Ø = 2.5(2) sin 40 = 3.21".

Enter 3 $^1/_4$" in total movement column on standard.

Actual movement = L cos Ø = 2 cos 40 = 1.53".

$A_{max} = A_{min}$ + actual movement = 1" + 1 $^1/_2$" = 2 $^1/_2$" < 3 $^1/_2$" O.K.

$A = A_{min} + {}^1/_2$ actual movement = 1" + $^3/_4$" = 1 $^3/_4$".

Enter 1 $^3/_4$" in column A on standard.

4. Determine minimum opening in concrete slab (Amin):

Expansion Length	Minimum Opening	
	Type F2	Type I
O' to 100'	$^3/_4$"	$^1/_2$"
Over 100' to 200'	1"	$^3/_4$"
Over 200' to 300'	1 $^1/_4$"	1"
Over 300'	1 $^1/_2$"	1 $^1/_4$"

5. Determine maximum opening of concrete slab (Amax):

$$A_{max} = A_{min} + L \cos Ø$$

Note: The maximum opening between the rigid portions of the dam at roadway surface shall not exceed 3 $^1/_2$" for Types F2 and I.

6. When joint requirements do not fit within the dam selection criteria, tooth expansion joint should be used.

7. When an expansion dam is required at a joint with only fixed bearings because of the skew and/or rotation depth, set A = Amin + $^1/_2$".

NOTES TO DESIGNER (cont'd):

Design/Detailing Requirements:

1. Pay items for expansion dam shall be based on total movement as follows:

   0" to 2"
   2" + to 3"
   3" + to 4"

2. Abutment design may be affected by the tensile and/or compressive forces transmitted by dams. Under extreme conditions any dam may transmit tensile and/or compressive forces of 300 lbs./lin.ft. of dam.

3. Where expansion dams are used, the ends of the deck slabs and abutment backwalls require additional reinforcing.

4. The following note shall be added to abutment and superstructure details as appropriate:

   The Contractor shall adjust reinforcing steel as required to clear shear connectors.

ADD THE FOLLOWING NOTES, DIMENSIONS, DETAILS, ETC. TO STANDARD:

Complete table by indicating abutment or pier designation, types (of dams) allowed (e.g. F2, I), A @ 60°F, t, total movement and skew angle.

A @ 60°F = slab opening at mid temp = A_{min} + ½ actual movement

t = temperature variation per 10°F as follows:

Span Length	t
40'-59'	$^{3}/_{64}$"
60'-99'	$^{1}/_{16}$"
100'-124'	$^{3}/_{32}$"
125'-149'	$^{7}/_{64}$"
150'-199'	$^{1}/_{8}$"
200'-249'	$^{11}/_{64}$"
250'-300'	$^{7}/_{32}$"

STATE	FEDERAL AID ROUTE	FEDERAL AID PROJECT	STATE ROUTE	STATE PROJECT	SHEET NO.
VA.	—				

PART PLAN

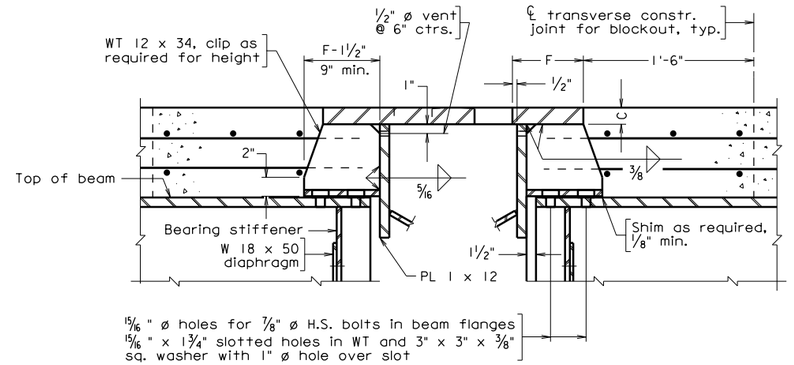

PART SECTION AT STEEL GIRDER

Notes:

Structural steel shall be ASTM A36 and shall be fabricated in accordance with Section 407 and painted in accordance with Section 411 of the Specifications.

Bolts, nuts and washers in trough shall be ASTM A276, Type 304 stainless steel.

Flathead screws shall be ASTM F738, Type 304 stainless steel.

Elastomeric material for troughs shall be 50 durometer, nonwicking synthetic fabric reinforced, ¼" thick sheets, in accordance with Section 212.02(j) of the Specifications. Fabric shall be woven non-wicking polyester. Width of sheets equal 2 times the tooth length (L) + 6".

Unit shall be shipped to the job site preassembled for lengths up to forty feet. One field welded splice is permissible for each additional forty feet.

Tooth plates shall be flame cut from one plate by a single cut of a machine guided torch. Sharp corners are to be removed by grinding. Width of cut shall be ¼". Width of plate required equals $2F + 2 + (A + B - 1.75)\cos\theta$.

Joint shall be fabricated to follow the grade and the transverse contour of the roadway.

To assure that all bedding areas and recesses of the structural elements are completely filled with well compacted concrete, adequate venting, vibrating and hand packing of concrete into these areas shall be done.

Anchor bolts shall be cast in place.

Temporary L's 4 x 3 x ½ at maximum 5'-0" centers shall be shop welded. After erection and adjustment, bolts shall be tightened. After concrete has been set, angles shall be removed by chipping connection welds and grinding surfaces smooth.

Set joint and place blockout concrete after all deck slabs in spans that affect the joint have been placed. Before placing blockout concrete, apply epoxy bonding agent to transverse construction joint.

For details of tooth expansion joint, see standard(s) BEJ-8 and BEJ-9, sheet and .

Abut.	Pier	Tooth Length L	C	D	E	F	G	Skew Angle θ	Trough Type

" Tooth length Temperature adjustments			" Tooth length Temperature adjustments		
Temp.	A	B	Temp.	A	B
120°F			120°F		
100°F			100°F		
80°F			80°F		
60°F			60°F		
40°F			40°F		
20°F			20°F		
0°F			0°F		

Make linear interpolation for temperatures between those in table.

PART SECTION

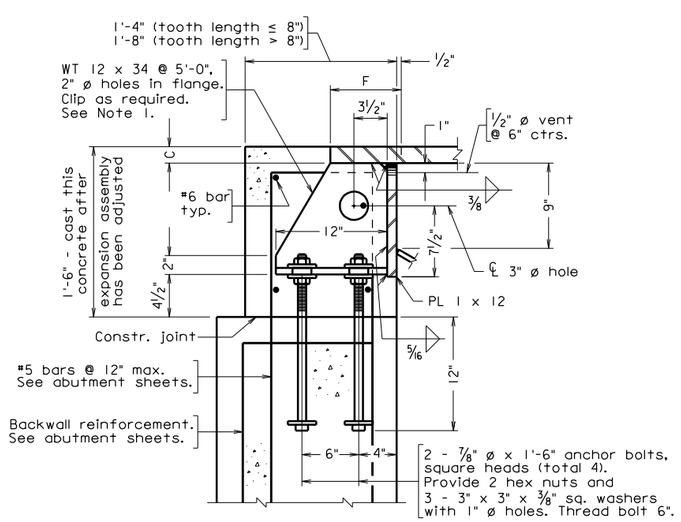

PART SECTION AT ABUTMENT

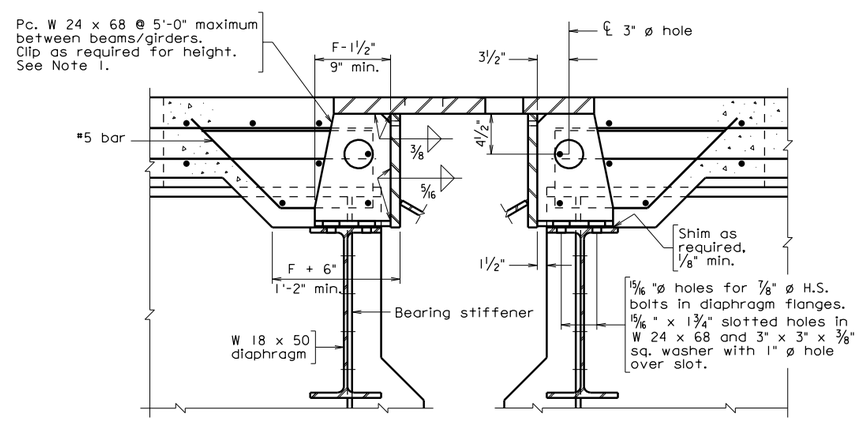

PART SECTION AT STEEL DIAPHRAGM

Note 1: Use intermediate anchors at 12" max. spacing between WT's.

Not to scale

©2010, Commonwealth of Virginia

No.	Description	Date

Revisions

COMMONWEALTH OF VIRGINIA
DEPARTMENT OF TRANSPORTATION

STRUCTURE AND BRIDGE DIVISION

TOOTH EXPANSION JOINT

Designed: .....
Drawn: ....S&B DIV
Checked: .....

Date

Plan No. BEJ-6

Sheet No.

bej6.dgn

06-14-2010

BEJ-6

VDOT S&B DIVISION
RICHMOND, VA
STRUCTURAL ENGINEER

STATE	FEDERAL AID ROUTE	FEDERAL AID PROJECT	STATE ROUTE	STATE PROJECT	SHEET NO.
VA.	—				

PART PLAN

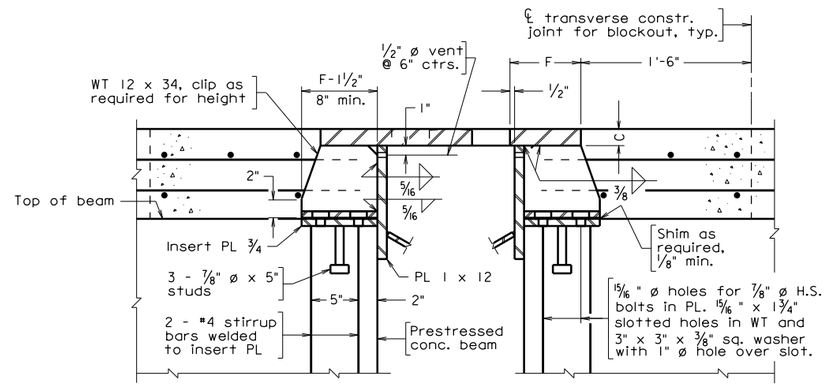

PART SECTION AT CONCRETE BEAM

PART SECTION

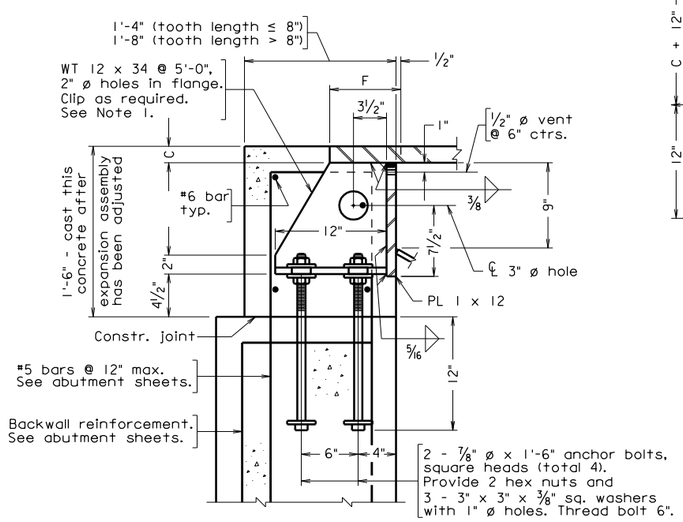

PART SECTION AT ABUTMENT

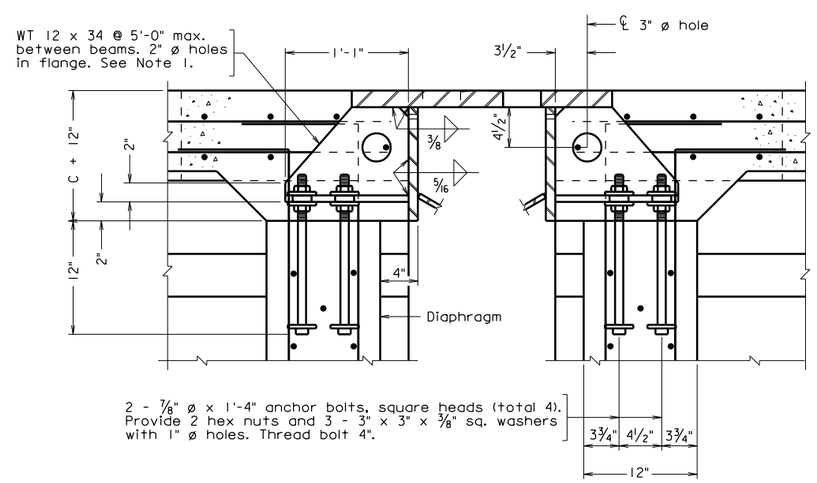

PART SECTION AT CONCRETE DIAPHRAGM

Notes:

Structural steel shall be ASTM A36 and shall be fabricated in accordance with Section 407 and painted in accordance with Section 411 of the Specifications.

Bolts, nuts and washers in trough shall be ASTM A276, Type 304 stainless steel.

Flathead screws shall be ASTM F738, Type 304 stainless steel.

Elastomeric material for troughs shall be 50 durometer, nonwicking synthetic fabric reinforced, ¼" thick sheets, in accordance with Section 212.02(j) of the Specifications. Fabric shall be woven non-wicking polyester. Width of sheets equal 2 times the tooth length (L) + 6".

Unit shall be shipped to the job site preassembled for lengths up to forty feet. One field welded splice is permissible for each additional forty feet.

Tooth plates shall be flame cut from one plate by a single cut of a machine guided torch. Sharp corners are to be removed by grinding. Width of cut shall be ¼". Width of plate required equals $2F + 2 + (A + B - 1.75)\cos\theta$.

Joint shall be fabricated to follow the grade and the transverse contour of the roadway.

To assure that all bedding areas and recesses of the structural elements are completely filled with well compacted concrete, adequate venting, vibrating and hand packing of concrete into these areas shall be done.

Anchor bolts shall be cast in place.

Temporary L's 4 x 3 x ½ at maximum 5'-0" centers shall be shop welded. After erection and adjustment, bolts shall be tightened. After concrete has been set, angles shall be removed by chipping connection welds and grinding surfaces smooth.

Set joint and place blockout concrete after all deck slabs in spans that affect the joint have been placed. Before placing blockout concrete, apply epoxy bonding agent to transverse construction joint.

For details of tooth expansion joint, see standard(s) BEJ-8 and BEJ-9, sheet and .

Abut.	Pier	Tooth Length L	C	D	E	F	G	Skew Angle θ	Trough Type

" Tooth length Temperature adjustments			" Tooth length Temperature adjustments		
Temp.	A	B	Temp.	A	B
120°F			120°F		
100°F			100°F		
80°F			80°F		
60°F			60°F		
40°F			40°F		
20°F			20°F		
0°F			0°F		

Make linear interpolation for temperatures between those in table.

Note 1: Use intermediate anchors at 12" max. spacing between WT's.

Not to scale

©2010, Commonwealth of Virginia

No.	Description	Date

Revisions

COMMONWEALTH OF VIRGINIA
DEPARTMENT OF TRANSPORTATION

STRUCTURE AND BRIDGE DIVISION

TOOTH EXPANSION JOINT

Designed: S&B DIV
Drawn: S&B DIV
Checked:

Date

Plan No. BEJ-7

Sheet No.

VDOT S&B DIVISION
RICHMOND, VA
STRUCTURAL ENGINEER

06-14-2010

BEJ-7

bej7.dgn

STATE	FEDERAL AID ROUTE	FEDERAL AID PROJECT	STATE ROUTE	STATE PROJECT	SHEET NO.
VA.	—				

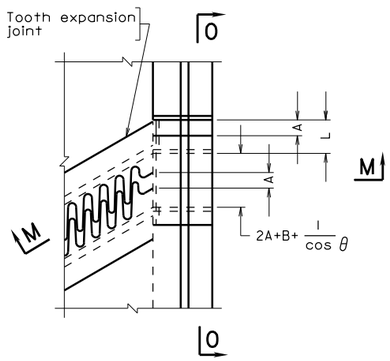

PLAN AT MEDIAN BARRIER

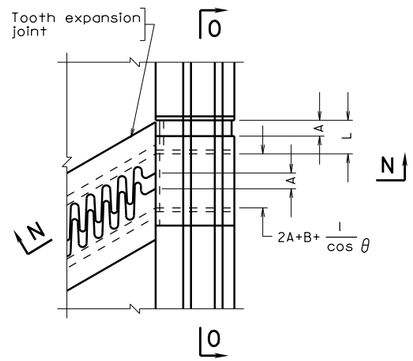

PLAN AT PARAPET

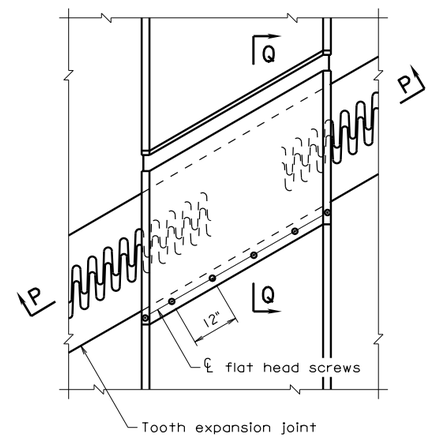

PLAN AT RAISED MEDIAN

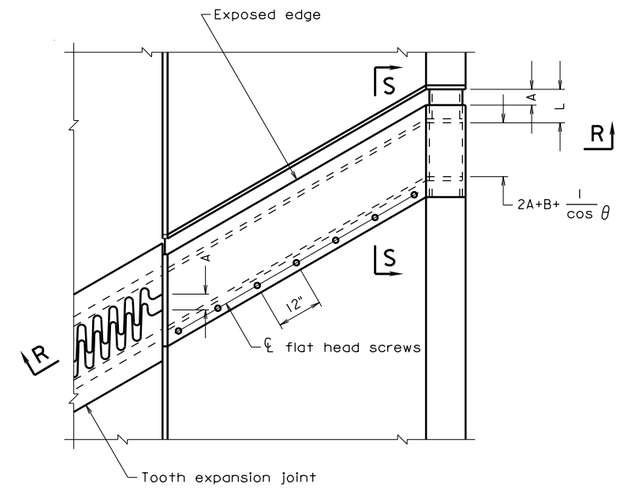

PLAN AT SIDEWALK

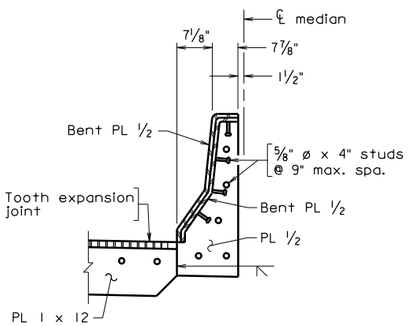

SECTION M-M

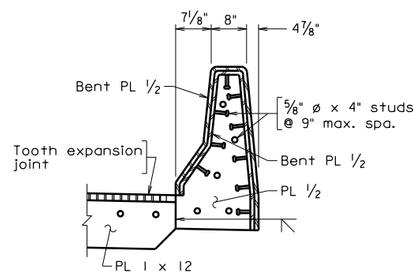

SECTION N-N

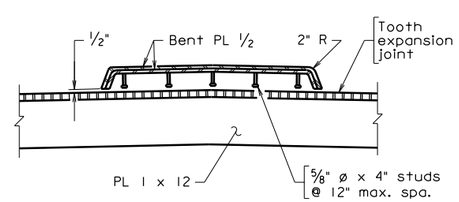

SECTION P-P

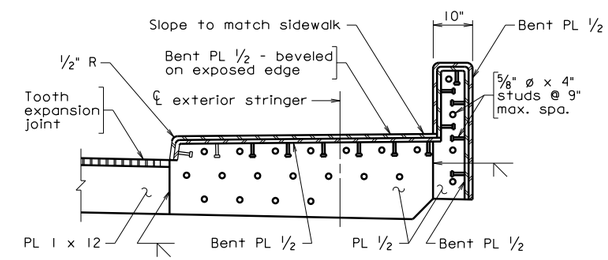

SECTION R-R

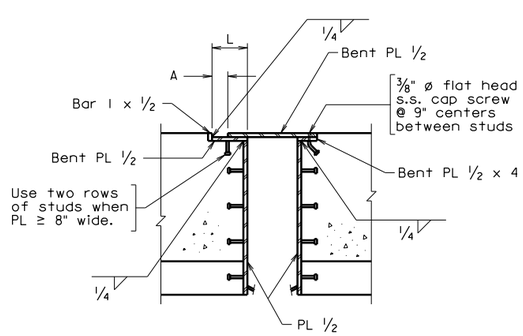

SECTION O-O

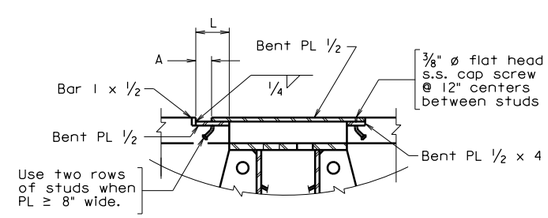

SECTION Q-Q

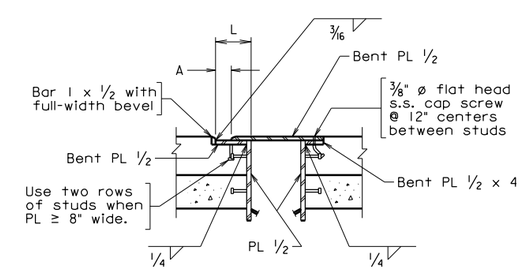

SECTION S-S

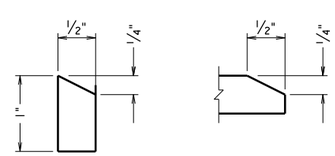

BAR 1 X 12 BENT PL 1/2

BEVEL DETAILS

Not to scale

©2010, Commonwealth of Virginia

No.	Description	Date
	Revisions	

COMMONWEALTH OF VIRGINIA
DEPARTMENT OF TRANSPORTATION

STRUCTURE AND BRIDGE DIVISION

TOOTH EXPANSION JOINT MISCELLANEOUS DETAILS

Designed: S&B DIV
Drawn: S&B DIV
Checked: S&B DIV

Date

Plan No. BEJ-10

Sheet No.

VDOT S&B DIVISION
RICHMOND, VA
STRUCTURAL ENGINEER

BEJ-10 06-14-2010 bej10.dgn

STATE	FEDERAL AID ROUTE	FEDERAL AID PROJECT	STATE ROUTE	STATE PROJECT	SHEET NO.
VA.	—				

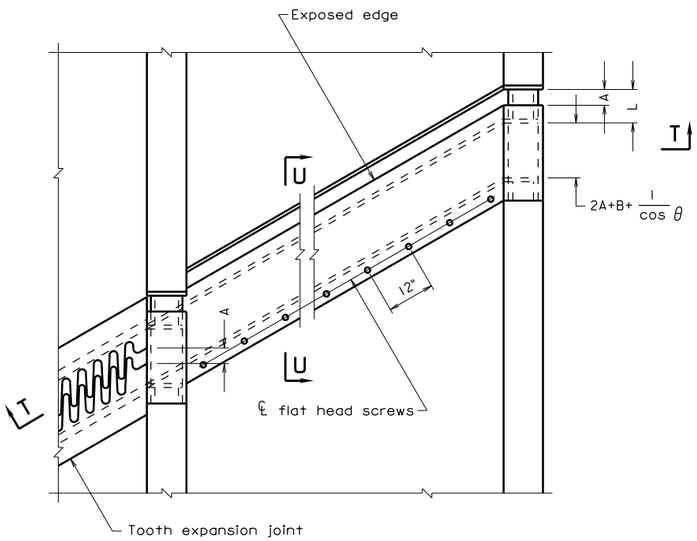

PLAN AT BARRIER SEPARATED PEDESTRIAN AND/OR BICYCLE FACILITY

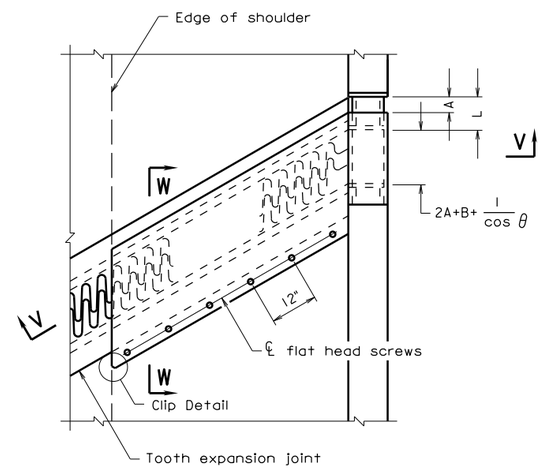

PLAN AT SHOULDER WHERE BICYCLE USE IS ANTICIPATED

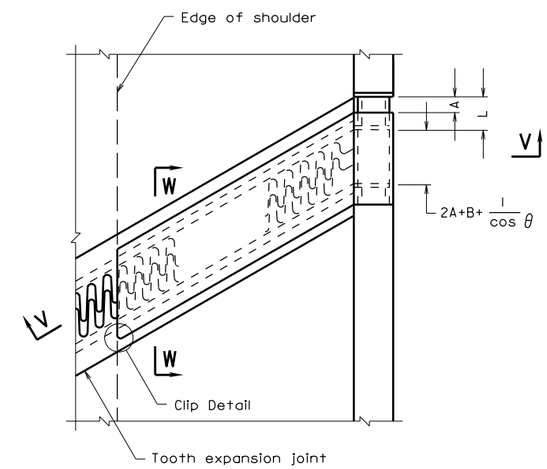

PLAN AT SHOULDER WHERE BICYCLE USE IS ANTICIPATED - ALTERNATE

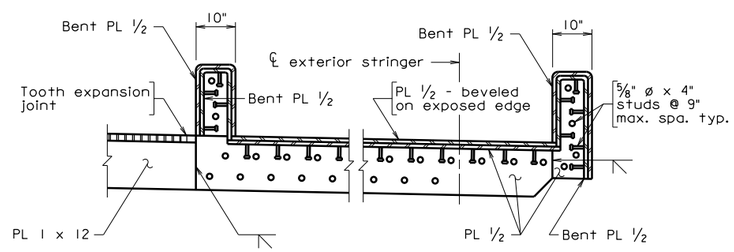

SECTION T-T

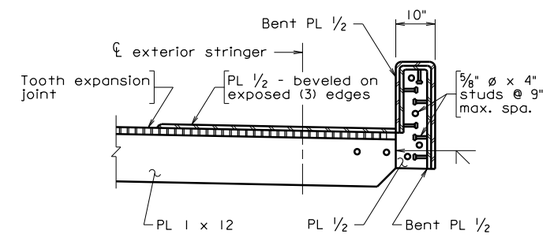

SECTION V-V

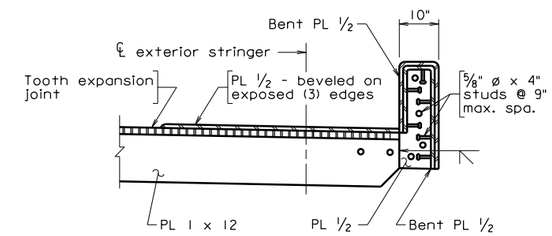

SECTION V-V - ALTERNATE

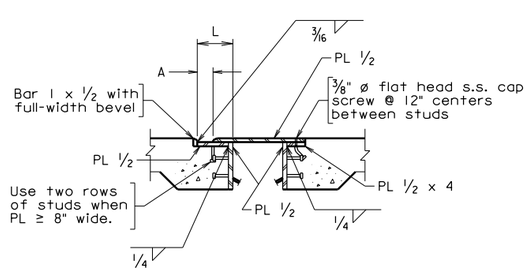

SECTION U-U

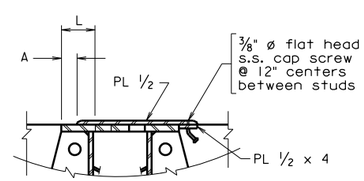

SECTION W-W

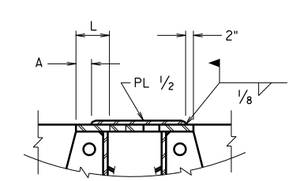

SECTION W-W - ALTERNATE

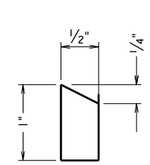

BAR 1 X 12

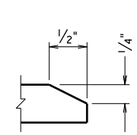

PL 1/2

BEVEL DETAILS

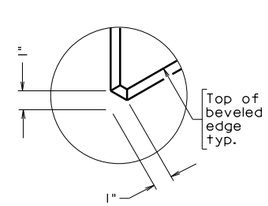

CLIP DETAIL

Not to scale

©2010, Commonwealth of Virginia

No.	Description	Date
	Revisions	

COMMONWEALTH OF VIRGINIA
DEPARTMENT OF TRANSPORTATION

STRUCTURE AND BRIDGE DIVISION

TOOTH EXPANSION JOINT MISCELLANEOUS DETAILS

Designed: S&B DIV
Drawn: S&B DIV
Checked: S&B DIV

Date

Plan No. BEJ-11

Sheet No.

VDOT S&B DIVISION
RICHMOND, VA
STRUCTURAL ENGINEER

06-14-2010

BEJ-11

bej11.dgn

STATE	FEDERAL AID ROUTE	FEDERAL AID PROJECT	STATE ROUTE	STATE PROJECT	SHEET NO.
VA.	—				

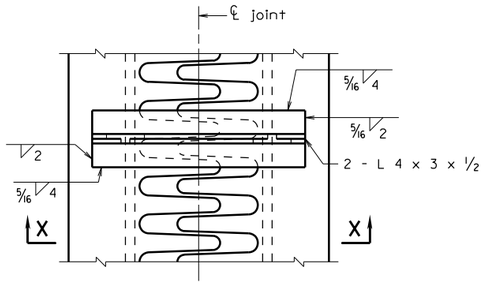

PLAN OF TEMPORARY ATTACHMENT

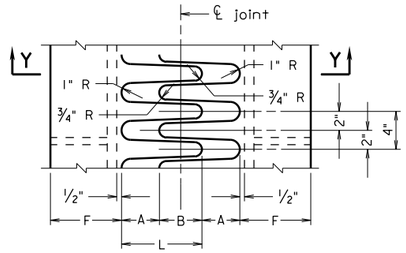

NO SKEW

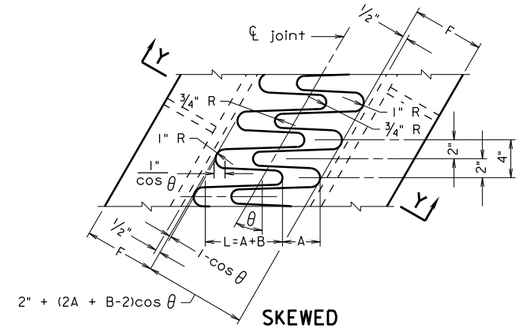

SKEWED

TOOTH PART PLAN

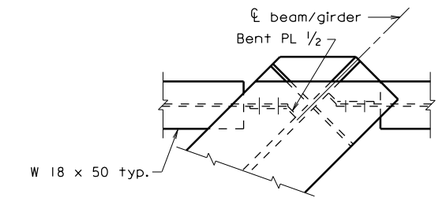

STEEL BEAM/GIRDER SKEWED BEARING STIFFENER DETAIL

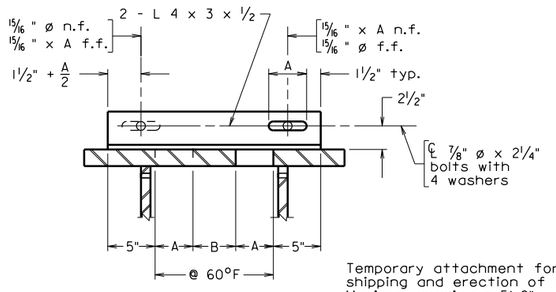

Temporary attachment for shipping and erection of joint. Maximum spacing = 5'-0".

SECTION X-X

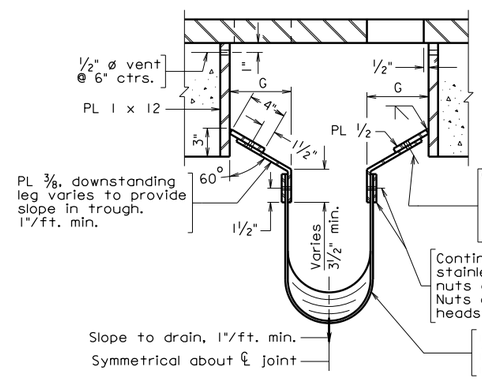

TYPE B

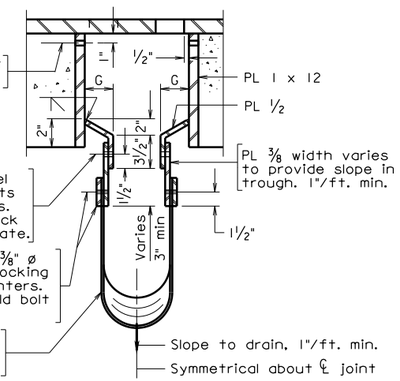

TYPE A

SECTION Y-Y (TROUGH DETAILS)

Note: Extend trough to edge of slab. Trough detail not shown.

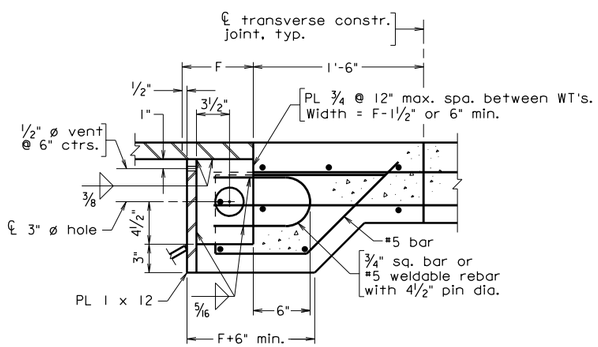

INTERMEDIATE ANCHOR DETAIL

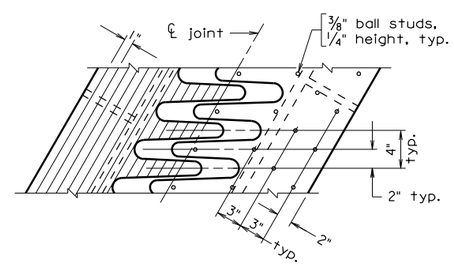

WELD PATTERN STUD PATTERN

SKID RESISTANCE DETAIL

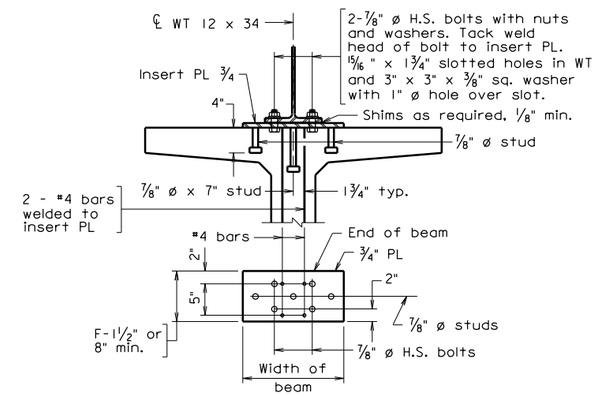

CONCRETE BEAM INSERT PLATE

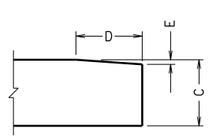

TOOTH BEVEL DETAIL

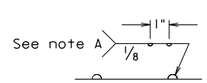

Note A: Use minimum preheat and interpass temperature of 250° F.

Contractor may provide either studs or weld pattern. Do not place on beveled end of tooth.

Not to scale

©2010, Commonwealth of Virginia

No.	Description	Date
	Revisions	

COMMONWEALTH OF VIRGINIA
DEPARTMENT OF TRANSPORTATION

STRUCTURE AND BRIDGE DIVISION

TOOTH EXPANSION JOINT MISCELLANEOUS DETAILS

Designed: S&B DIV
Drawn: S&B DIV
Checked: S&B DIV

Date

Plan No. BEJ-12

Sheet No.

VDOT S&B DIVISION
RICHMOND, VA
STRUCTURAL ENGINEER

BEJ-12 06-14-2010 bej12.dgn

NOTES TO DESIGNER:

The tooth expansion joint standard consists of five standard sheets BEJ-6, BEJ-7, BEJ-10, BEJ-11 and BEJ-12. BEJ-6 is for steel girders and BEJ-7 is for concrete beams. BEJ-10, BEJ-11 and BEJ-12 are miscellaneous details and must be used with standards BEJ-6 and BEJ-7 as applicable.

1. Determine if preformed elastomeric joint sealer (compression sealer) or elastomeric expansion dam (strip seal) can be used. See Manual of the Structure and Bridge Division, Volume V – Part 2, Chapter 14 and Manual of the Structure and Bridge Division, Volume V – Part 3, standards BEJ-1, -2 and -3.

2. If compression sealer or strip seal cannot be used, determine the appropriate tooth length based on the total length of movement over which thermal expansion will be occurring. A tooth expansion joint program is available for use by in-house design staff only. See Note 13 for values and formulas used by the program. For the required tooth length, complete the tables on standard sheet BEJ-6 for steel beams/girders and BEJ-7 for concrete beams.

3. All factors which affect movement should be considered in dimensioning the joint: creep, construction tolerances, temperature range, bearing types and direction of allowed movements, skews, external restraints, etc., and appropriate factors of safety applied to the design. The rated movement of the joint should exceed the temperature movement by at least 20%. This excess allowance is intended to prevent destruction of the joint due to unpredictable movements of a given location and is included in the calculation of the tooth length in the computer program.

4. The minimum joint opening in the longitudinal direction shall be 1”. At maximum joint opening, the tooth overlap shall be 1 $^{1}/_{2}$”.

5. Align teeth in the direction that the longitudinal thermal movement will occur. Special care needs to be taken on curved structures. When teeth do not align with the parapet, median, etc., a note shall be added to the plans to dimension a sufficient gap between the parapet, median, etc.. Sliding plates are to be provided for the transverse component of movement.

6. Where bicycle use is anticipated, use special floor plates in the shoulder area. Free ends of floor plates shall point in the direction of travel.

7. Maximum tooth length is determined by limiting the tooth plate thickness to 3”. Greater tooth length can be accommodated by special design and providing support plates beneath the teeth.

8. Coordinate the details of the diaphragms supporting tooth joints between the joint standard and the structural steel details. Also, coordinate the location of the shear connectors on the ends of steel beams/girders. Provide adequate distance between centerline of joint and centerline of bearing to accommodate the joint. On skews, make sure that bearing stiffeners do not interfere with the trough.

9. Maximum length for W18x50 diaphragm is 15’-0”. A heavier section must be designed for longer spans.

NOTES TO DESIGNER (cont'd):

10. The length of the teeth may be increased on skews in order to provide room to get the trough in. The length of the teeth may also be increased at abutments in order to provide space between the backwall and the trough. The computer program will make these adjustments. Because of limited space next to abutment backwalls, it is preferable not to locate a tooth joint at an abutment when the teeth are short.

11. The space requirements for tooth expansion joints shall be determined prior to designing the beams/girders and supporting substructure.

12. Space is provided on standard BEJ-6 for steel beams/girders and BEJ-7 for concrete beams for the designer to detail a Part Plan and Part Section of the joint. These details are not provided on the standard because of the many possible combinations of skew, beam/girder spacing, beam/girder type, etc. Part Plan should be long enough to cover the blockout area and wide enough to cover two beams/girders and the slab cantilever.

13. The Tooth Expansion Joint Program uses the following values and formulas:

    TL = Tooth length (inches)

    E = 0.0000065 in/in/°F for steel beams/girders

    E = 0.000006 in/in/°F for concrete beams

    T = 120 ° F temperature range for steel beams/girders

    T = 80 ° F temperature range for concrete beams

    S = Total thermal movement distance (feet)

    F = Factor of safety of 1.25

    CLR = Minimum clear distance between end plates.

    TL = 2.5 + 12 x E x T x S x F (provides for 1" min. opening and 1 $^1/_2$" min. tooth lap
    Min. TL = 5")

    CLR = 3 + (TL - 1)cos Ø If CLR ≥ 11", then trough type B
    Else if CLR ≥ 9" and at abutment, then trough type A
    Else if CLR ≥ 7" and at pier, then trough type A
    Else adjust tooth length to meet the above minimum CLR

    Dimension A = 1 + 12 x E x 60 x S x F at 60°F for steel beams/girders

    Dimension A = 1 + 12 x E x 40 x S x F at 60°F for concrete beams
    Adjust dimension A by 12 x E x 20 x S for each 20°F temperature change.

NOTES TO DESIGNER (cont'd):

Dimension B = TL – A

Dimension C = 0.78994 $\sqrt{(TL - 4)}$ (Based on 16k wheel of 20" width placed 4" from end of tooth and 30% impact. Minimum C = 1.5")

Dimension C = 0.88318 $\sqrt{(TL - 4)}$ (Based on 20k wheel of 20" width placed 4" from end of tooth and 30% impact. Minimum C = 1.5")

Dimension D = 0.2 x TL

Dimension E = $^1/_8$" for D < 2
$^3/_{16}$" for 2 ≤ D < 3
$^1/_4$" for D ≥ 3

Dimension F = Use sufficient length of $^3/_8$" fillet weld (Category E) to resist vertical wheel load and horizontal traction load with anchors at 12" spacing.

Dimension G = (CLR-3)/2

These formulas are provided for use in special design situations. Normally, the values will be obtained using the computer program for in-house design staff. The program may oversize the joint in order to provide sufficient space for the trough when the bridge is skewed. Values are rounded to fractions of an inch. See File No. BEJ-6/7/10/11/12-11 for additional program information.

14. Pay items for tooth expansion joints shall be based on tooth thickness and bid on a linear foot basis.

    Tooth Expansion Joint, (tooth thickness) L.F.

ADD THE FOLLOWING NOTES, DIMENSIONS, DETAILS, ETC. TO STANDARD:

BEJ-6: Complete Tables, Part Plan and Part Section. (Steel beams/girders)

BEJ-7: Complete Tables, Part Plan and Part Section. (Concrete beams)

BEJ-10:

<u>PLAN AT MEDIAN BARRIER:</u>

Modify if other than split barrier, F-shape (Standard BMB-5A) is used.

<u>SECTION M-M:</u>

Modify if other than split barrier, F-shape (Standard BMB-5A) is used.

ADD THE FOLLOWING NOTES, DIMENSIONS, DETAILS, ETC. TO STANDARD: (cont'd)

BEJ-10: (Cont.)

PLAN AT PARAPET:

Modify if other than F-shape parapet (Standard BPB-3A or BPB-3B) is used.

SECTION N-N:

Modify if other than F-shape parapet (Standard BPB-3A or BPB-3B) is used.

PLAN AT RAISED MEDIAN:

Modify if raised median differs.

SECTION P-P:

Modify if raised median differs.

PLAN AT SIDEWALK:

Modify based on rail and terminal wall details.

SECTION R-R:

Modify if other than Standard BR27C or BR27D series steel railing is used.

BEJ-11:

PLAN AT BARRIER SEPARATED PEDESTRIAN AND / OR BICYCLE FACILITY:

Modify based on rail and terminal wall details.

SECTION T-T:

Modify if other than Standard BR27C or BR27D series steel railing is used.

PLAN AT SHOULDER WHERE BICYCLE USE IS ANTICIPATED:

Modify based on rail and terminal wall details.

SECTION V-V:

Modify if other than Standard BR27C or BR27D series steel railing is used.

TOOTH EXPANSION JOINT

TYPICAL DETAILS:

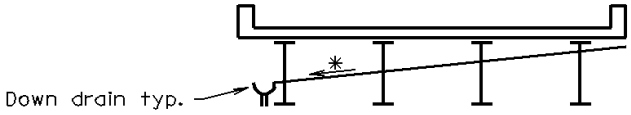

SINGLE SLOPE

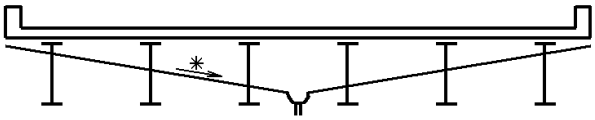

DOUBLE SLOPE

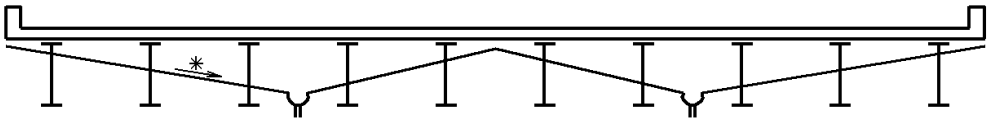

MULTIPLE SLOPES

TYPICAL TROUGH DETAILS

* Slope of trough to be a minimum of 1 in/ft. Make trough slope as steep as beam or girder depth will allow without using excessive down drains. Troughs should be accessible from beneath the bridge. Designer to provide details of drainage from down drain to the ground. Troughs should not hang beneath the bottom of the beams/girders. Locate trough high points between beams or girders where utilities exist.

ADDITIONAL TOOTH EXPANSION JOINT PROGRAM INFORMATION:

1. Program is run by typing TOOTHJTC and <ENTER>.
2. Input:
   a. Project number
   b. Description
   c. Total expansion length (feet)
   d. Skew angle (degrees)
   e. (S)teel or (C)oncrete beams/girders
   f. (I)=HS20 or (2)=HS25 Loading
   g. Joint located at (A)butment or (P)ier
   h. Weight data (Y)es or (N)o
   i. (R)erun or (Q)uit
3. Output:
   a. Project number
   b. Description
   c. Total expansion length (feet)
   d. Skew angle (degrees)
   e. Type beams
   f. Type loading
   g. Joint location
   h. Trough type
   i. Tooth length L
   j. Dimension A and B Table
   k. Dimension C
   l. Dimension D
   m. Dimension E
   n. Dimension F
   o. Dimension G
   p. Approximate elastomer depth below bottom of plates
   q. Weight data

Tooth Expansion Joint Program for use by in-house design staff only.

STATE	FEDERAL AID ROUTE	FEDERAL AID PROJECT	STATE ROUTE	STATE PROJECT	SHEET NO.
VA.	—				

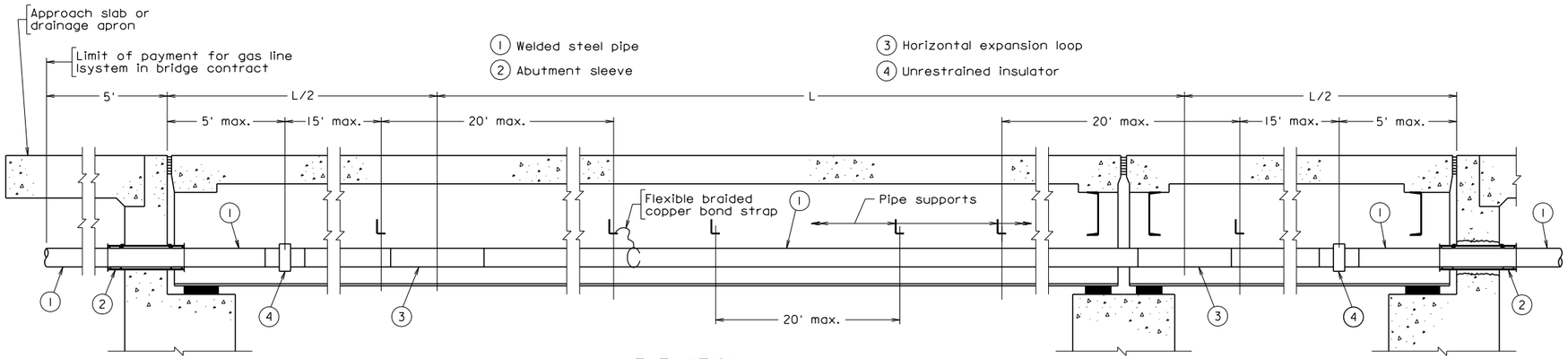

ELEVATION
Not to scale

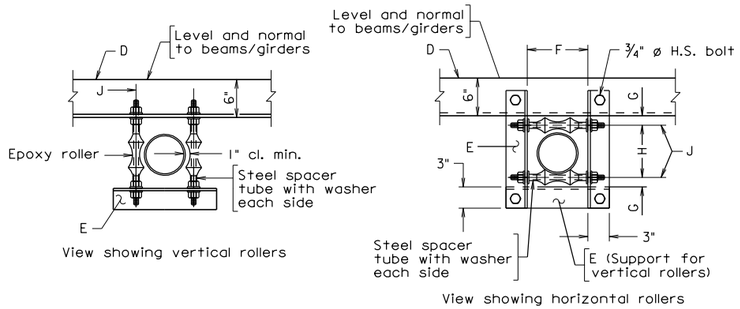

TYPICAL SUPPORT DETAIL AT EXPANSION JOINT
Scale: 1" = 1'-0"

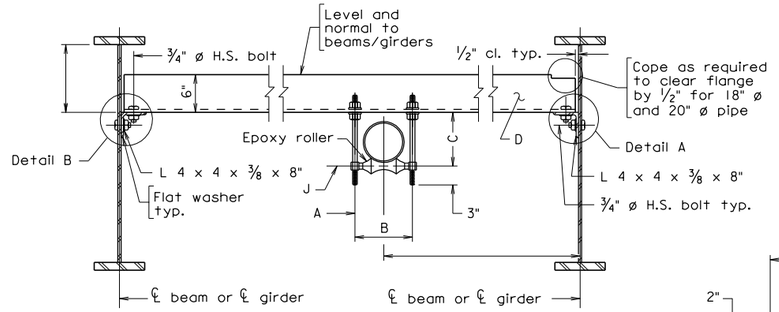

TYPICAL SUPPORT DETAIL
Scale: 1" = 1'-0"

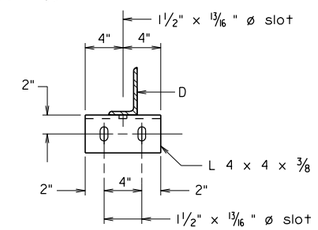

DETAIL A

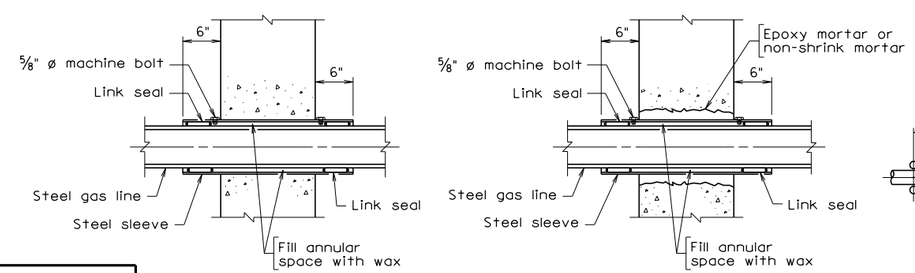

NEW STRUCTURES

EXISTING STRUCTURES

ABUTMENT SLEEVE DETAIL
Scale: 1" = 1'-0"

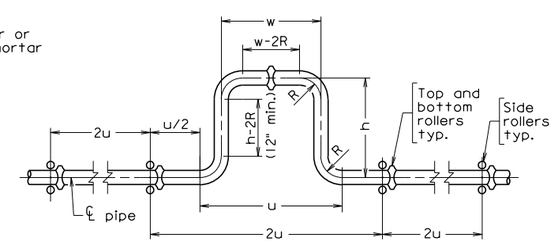

HORIZONTAL EXPANSION LOOP
Not to scale

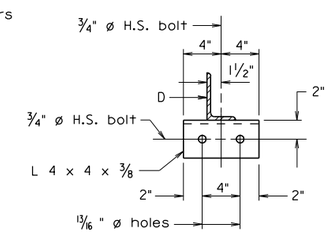

DETAIL B

Notes:

Material - Seamless Steel Pipe - Welded Joint
Specification - API 5LX
Grade 5LX-42 (5L-35 for 4")
Minimum Wall Thickness:
For 6" and under - Schedule 40
For 8" and over - Schedule 20
Steel Casing - API 5L-B 3/8" wall thickness
Casing pipe size - nom. pipe dia. + 4"

Structural steel for angles shall be the same as that for the beams/girders. If the beams/girders are painted, the angles shall be galvanized in accordance with ASTM A123.

If the angle is galvanized, the H.S. bolts shall be ASTM 325 galvanized. If the angle is not painted (unpainted weathering steel), the H.S. bolts shall be ASTM A325, Type 3.

Pipe Ends - Ends shall be beveled 30 degrees, protected with plastic end caps.

Fittings - Fittings for steel gas main shall conform to API Spec. 6D or ANSI B16.5, B16.9, or B16.11. Bends shall be made only with bending equipment and procedures specifically intended for that purpose. All bends shall be seamless, smooth and free from mechanical damage.

Rollers - Epoxy - Locate rollers at bottom only except at expansion joints/loops where they are required top and bottom and on each side of pipe.

Unrestrained Insulator - Barlow insulator joint or equal.

Drips - Not required unless otherwise specified.

Cathodic Protection - Isolate bridge section from in ground section.

Galvanization - Miscellaneous hardware: Rods, nuts, etc. shall be galvanized in accordance with ASTM A153. When the supporting angles to which the rods are attached are weathering steel, a neoprene or vinyl washer shall be placed between the angle surface (on both sides) and the nut/washer to isolate the contact between the two surfaces.

Finish - Coatings shall be marked in compliance with U.S.D.O.T. Section 192.63. The finish shall consist of one of the following alternates:

1. Coating with Tnemec system or equal consisting of three coats: zinc rich primer, polyamide epoxy, and aliphatic polyurethane. Welded joints shall be treated with a similar process.

2. Coating with Plexco Extruded Polyolefin, Pritec or Scotchkote 205 Fusion Bonded Epoxy meeting NAPCA-TGF-3 specifications. Plastic tape (cold applied, Tapecoat 7, Polyken #932 or approved equal) shall be field applied to pipe joints and damaged areas of coatings. The joint area to be taped shall be clean and free of burrs and rust. Damaged coating shall be smoothed down or cut away if not firmly bonded to the pipe. Wrap spirally with a two-layer wrapping system, overlapping the coating surface at least 3 inches. The tape shall be initially stretched sufficiently to conform to the surface to which it is applied, using one layer half-lapped for tape 2 inches or less in width, or one layer lapped at least one inch for tape more than 2 inches wide. A second layer lapped as above with a tension as it comes off the roll shall then be applied and pressed to conform to the shape of the component.

Testing Gas Line - Steel gas main, appurtenances and materials shall be tested for leakage after installation. Such testing shall be performed under the observation of the Owner. Contractor to give 48 hour notice prior to test. The Contractor shall provide all plugs, equipment, tools, labor, materials and incidentals necessary to perform the testing. In the event any section of main shows leakage in excess of that specified, the Contractor shall, at no additional cost to the Department, make such repairs or replacements as are requiredand testing shall be repeated until satisfactory results are obtained. Pressure test shall be in accordance with ANSI B31.2 with a test pressure of 125 psi. The line shall be pressured with clean, dry air and show no drop in pressure in a two hour period. Contractor shall submit to Engineer a copy of the test report.

Welding - Steel gas pipes shall be field welded and inspected in accordance with ANSI B31.2. Electrodes shall conform to the requirements of API 1104. Welded joints shall be inspected and tested as required by CFR, Title 49, Part 192. Welders shall be qualified for pipeline welding. The Contractor shall submit the welder's qualifications for approval by the Engineer and the utility owner. Welders will be required to weld to the utility owner's specification prior to being approved unless otherwise waived by the Engineer.

DIMENSIONS

Pipe ø	A	B	C	D	E	F	G	H	J
4"	5/8"	7"	6 3/4"	L 6 x 4 x 1/2	L 3 x 3 x 3/8	7"	1"	5 3/4"	1/2"
6"	3/4"	9 5/8"	9 3/4"	L 6 x 4 x 1/2	L 3 x 3 x 3/8	9 5/8"	1 1/2"	8 1/4"	3/4"
8"	7/8"	12"	12"	L 6 x 4 x 1/2	L 3 x 3 1/2 x 3/8	12"	1 1/2"	10 1/2"	7/8"
10"	7/8"	1'-2"	1'-3"	L 6 x 4 x 1/2	L 3 x 3 1/2 x 3/8	1'-2"	2"	1'-1"	7/8"
12"	7/8"	1'-4"	1'-5 1/4"	L 6 x 4 x 1/2	L 3 x 4 x 3/8	1'-4"	2 1/4"	1'-3"	1"
14"	1"	1'-5 7/8"	1'-7 1/2"	L 6 x 4 x 1/2	L 3 x 4 x 3/8	1'-5 7/8"	2 1/2"	1'-5"	1 1/8"
16"	1"	1'-8"	1'-10"	L 6 x 6 x 1/2	L 3 x 5 x 3/8	1'-8"	3"	1'-7"	1 1/4"
18"	1 1/8"	1'-10"	2'-0"	L 6 x 6 x 1/2	L 3 x 5 x 3/8	1'-10"	3"	1'-9"	1 1/4"
20"	1 1/4"	2'-0 3/8"	2'-2"	L 6 x 6 x 1/2	L 3 x 5 x 3/8	2'-0 3/8"	3 1/2"	1'-10 1/2"	1 3/8"

J and A = diameter of rod

HORIZONTAL EXPANSION LOOP

Pipe ø	R	w	h	u	Allow. L
4"	6"	3'-6"	3'-6"	4'-6"	120'
6"	9"	3'-6"	3'-6"	5'-0"	105'
8"	12"	3'-6"	3'-6"	5'-6"	110'
10"	1'-3"	3'-6"	3'-6"	6'-0"	100'
12"	1'-6"	4'-0"	4'-0"	7'-0"	125'
14"	1'-9"	4'-6"	4'-6"	8'-0"	150'
16"	2'-0"	5'-0"	5'-0"	9'-0"	170'

Allow. L = Expansion length per loop.
For bridge lengths less than Allow. L, only one horizontal expansion loop will be required.

Notes (continued):

Payment - Gas Line System shall be paid for on a lump sum basis, wherein no measurement shall be made, and shall be paid for at the contract lump sum price, which price shall include furnishing and installing epoxy coated steel gas line, fittings (when required), insulated joints, testing, hangers rollers, rods, abutment sleeves, link seals, and all miscellabeous hardware; all as detailed on the Gas Line System drawing included herein and within the pay limits shown thereon. Such price shall be full compensation for furnishing all materials, labor, tools, equipment and incidentals becessary to complete the work.

Scale as noted

©2012, Commonwealth of Virginia

BGL-1.dgn

08-07-2012

Sealed and Signed by:
Julius F.J. Volgyi Jr.
Lic. No. 010487
On the date of
Aug. 7, 2012

A copy of the original sealed and signed standard drawing is on file in the Central Office.

VDOT S&B DIVISION
RICHMOND, VA
STRUCTURAL ENGINEER

BGL-1

No.	Description	Date
	Revisions	

COMMONWEALTH OF VIRGINIA
DEPARTMENT OF TRANSPORTATION

STRUCTURE AND BRIDGE DIVISION

GAS LINE SYSTEM

G. Henderson

Designed: S&B DIV
Drawn: S&B DIV
Checked: S&B DIV

Date

Plan No. BGL-1

Sheet No.

GAS LINE SYSTEM

STEEL BEAM/GIRDER SPANS

NOTES TO DESIGNER:

Standard is to be used with steel beam/girder spans. Maximum beam/girder spacing is limited to 10'-0".

To the extent possible, gas lines shall be placed in the exterior bays of the bridge.

Values in tables on the standard sheet are a composite from several manufacturers/suppliers.

Indicate location and size (diameter) of gas line to be used on the transverse section sheet. Indicate dimension from the bottom of top flange to bottom of angle support at the beam/girder. Indicate dimension from centerline of pipe to centerline of beam/girder. These dimensions must agree with those set on the transverse section sheet. Designer must consider the horizontal expansion loop when setting this dimension. Indicate location of gas line on framing plan. Show centerline and indicate size (diameter) of gas line. Do not show hanger spacing on framing plan.

Utilities Section (R/W) will provide the following information: Size of pipe.

For beam/girder design, the following weights may be used (includes total weight of hangers and pipe). Linear interpolation may be used for actual beam/girder spacing.

Diameter of Pipe (inches)	Weight of Gas Line (lbs./ft.) Beam/Girder Spacing	
	6'-0"	10'-0"
4	19	24
6	25	29
8	41	46
10	50	54
12	58	62
14	63	68
16	73	78
18	81	87
20	90	95

When designing beam/girder, the depth of the beam/girder must be sufficient to insure that the gas line supports at expansion details do not project below the bottom flange.

ADD THE FOLLOWING NOTES, DIMENSIONS, DETAILS, ETC. TO STANDARD:

TYPICAL SUPPORT DETAIL AT EXPANSION JOINT:

Indicate dimension from bottom of top flange (top of web) to bottom of angle support (angle D in Table). Indicate dimension from centerline of pipe to centerline of beam/girder. These dimensions must agree with those set on transverse section sheet.

STATE	FEDERAL AID ROUTE	FEDERAL AID PROJECT	STATE ROUTE	STATE PROJECT	SHEET NO.
VA.	—				

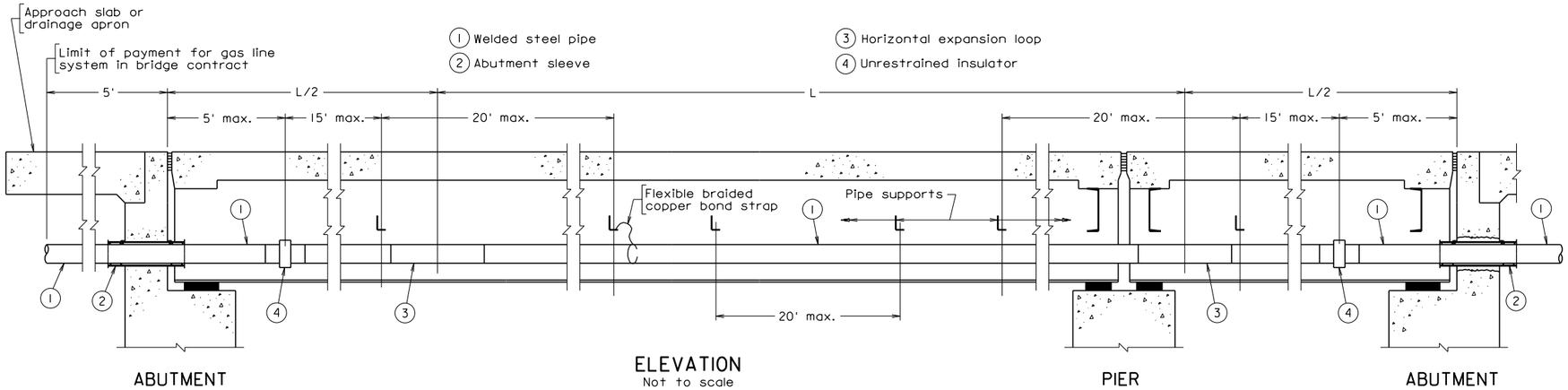

ELEVATION
Not to scale

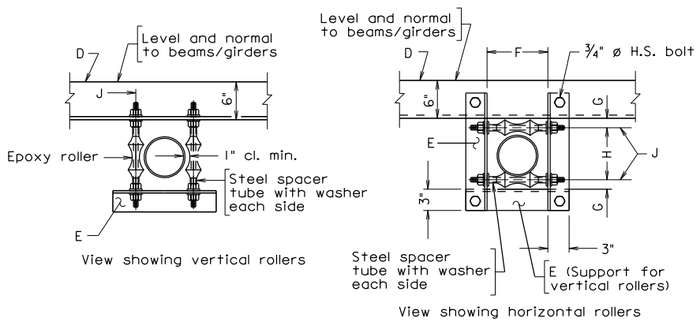

TYPICAL SUPPORT DETAIL AT EXPANSION JOINT
Scale: 1" = 1'-0"

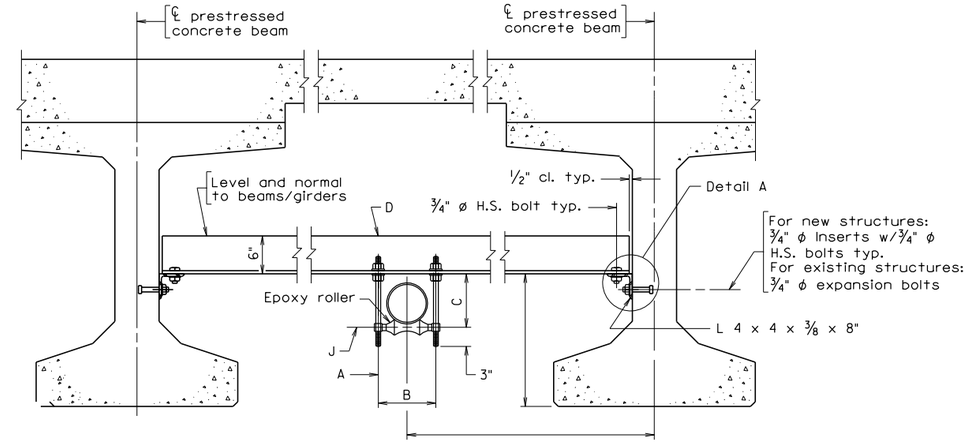

TYPICAL SUPPORT DETAIL
Scale: 1" = 1'-0"

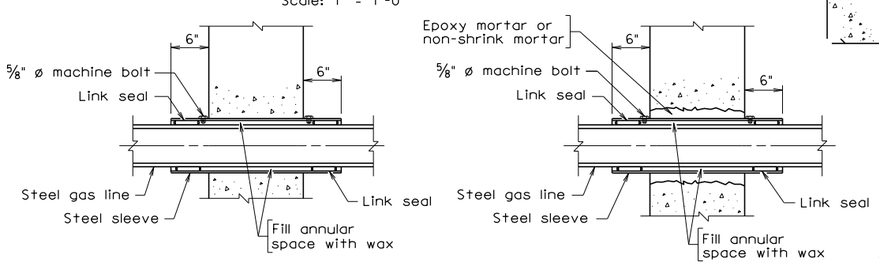

NEW STRUCTURES

EXISTING STRUCTURES

ABUTMENT SLEEVE DETAIL
Scale: 1" = 1'-0"

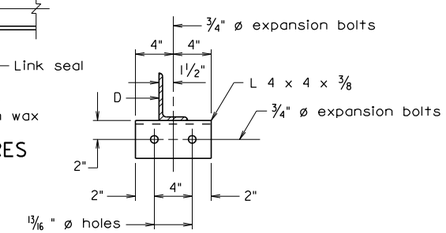

DETAIL A
Scale: 1 1/2" = 1'-0"

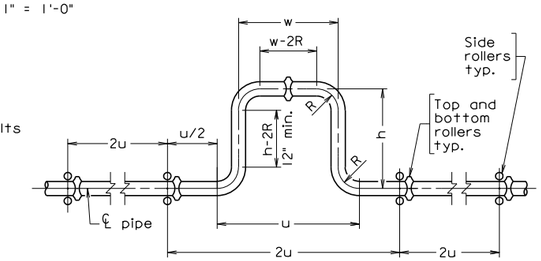

HORIZONTAL EXPANSION LOOP
Scale: 3/8" = 1'-0"

DIMENSIONS									
Pipe ϕ	A	B	C	D	E	F	G	H	J
4"	5/8"	7"	6 3/4"	L 6 x 4 x 1/2	L 3 x 3 x 3/8	7"	1"	5 3/4"	1/2"
6"	3/4"	9 5/8"	9 3/4"	L 6 x 4 x 1/2	L 3 x 3 x 3/8	9 5/8"	1 1/2"	8 1/4"	3/4"
8"	7/8"	12"	12"	L 6 x 4 x 1/2	L 3 x 3 1/2x 3/8	12"	1 1/2"	10 1/2"	7/8"
10"	7/8"	1'-2"	1'-3"	L 6 x 4 x 1/2	L 3 x 3 1/2x 3/8	1'-2"	2"	1'-1"	7/8"
12"	7/8"	1'-4"	1'-5 1/4"	L 6 x 4 x 1/2	L 3 x 4 x 3/8	1'-4"	2 1/4"	1'-3"	1"
14"	1"	1'-5 7/8"	1'-7 1/2"	L 6 x 4 x 1/2	L 3 x 4 x 3/8	1'-5 7/8"	2 1/2"	1'-5"	1 1/8"
16"	1"	1'-8"	1'-10"	L 6 x 6 x 1/2	L 3 x 5 x 3/8	1'-8"	3"	1'-7"	1 1/4"
18"	1 1/8"	1'-10"	2'-0"	L 6 x 6 x 1/2	L 3 x 5 x 3/8	1'-10"	3"	1'-9"	1 1/4"
20"	1 1/4"	2'-0 3/8"	2'-2"	L 6 x 6 x 1/2	L 3 x 5 x 3/8	2'-0 3/8"	3 1/2"	1'-10 1/2"	1 3/8"

J and A = diameter of rod

HORIZONTAL EXPANSION LOOP					
Pipe ϕ	R	w	h	u	Allow. L
4"	6"	3'-6"	3'-6"	4'-6"	120'
6"	9"	3'-6"	3'-6"	5'-0"	105'
8"	12"	3'-6"	3'-6"	5'-6"	110'
10"	1'-3"	3'-6"	3'-6"	6'-0"	100'
12"	1'-6"	4'-0"	4'-0"	7'-0"	125'
14"	1'-9"	4'-6"	4'-6"	8'-0"	150'
16"	2'-0"	5'-0"	5'-0"	9'-0"	170'

Allow. L = Expansion length per loop.
For bridge lengths less than Allow. L, only one horizontal expansion loop will be required.

Notes:

Material - Seamless Steel Pipe - Welded Joint
Specification - API 5LX
Grade 5LX-42 (5L-35 for 4")
Minimum Wall Thickness:
For 6" and under - Schedule 40
For 8" and over - Schedule 20
Steel Casing - API 5L-B 3/8" wall thickness
Casing pipe size - nom. pipe dia. + 4"

Structural steel for angles shall be ASTM A36. The angles shall be galvanized in accordance with ASTM A123.

H.S. bolts for angles shall be ASTM 325 galvanized.

Pipe Ends - Ends shall be beveled 30 degrees, protected with plastic end caps.

Fittings - Fittings for steel gas main shall conform to API Spec. 6D or ANSI B16.5, B16.9, or B16.11. Bends shall be made only with bending equipment and procedures specifically intended for that purpose. All bends shall be seamless, smooth and free from mechanical damage.

Rollers - Epoxy - Locate rollers at bottom only except at expansion joints/loops where they are required top and bottom and on each side of pipe.

Unrestrained Insulator - Barlow insulator joint or equal.

Drips - Not required unless otherwise specified.

Cathodic Protection - Isolate bridge section from in ground section.

Galvanization - Miscellaneous hardware: Rods, nuts, etc. shall be galvanized in accordance with ASTM A153.

Finish - Coatings shall be marked in compliance with U.S.D.O.T. Section 192.63. The finish shall consist of one of the following alternates:

1. Coating with Tnemec system or equal consisting of three coats: zinc rich primer, polyamide epoxy, and aliphatic polyurethane. Welded joints shall be treated with a similar process.

2. Coating with Plexco Extruded Polyolefin, Pritec or Scotchkote 205 Fusion Bonded Epoxy meeting NAPCA-TGF-3 specifications. Plastic tape (cold applied, Tapecoat 7, Polyken # 932 or approved equal) shall be field applied to pipe joints and damaged areas of coatings. The joint area to be taped shall be clean and free of burrs and rust. Damaged coating shall be smoothed down or cut away if not firmly bonded to the pipe. Wrap spirally with a two-layer wrapping system, overlapping the coating surface at least 3 inches. The tape shall be initially stretched sufficiently to conform to the surface to which it is applied, using one layer half-lapped for tape 2 inches or less in width, or one layer lapped at least one inch for tape more than 2 inches wide. A second layer lapped as above with a tenison as it comes off the roll shall then be applied and pressed to conform to the shape of the component.

Testing Gas Line - Steel gas main, appurtenances and materials shall be tested for leakage after installation. Such testing shall be performed under the observation of the Owner, Contractor to give 48 hour notice prior to test. The Contractor shall provide all plugs, equipment, tools, labor, materials and incidentals necessary to perform the testing. In the event any section of main shows leakage in excess of that specified, the Contractor shall, at no additional cost to the Department, make sure repairs or replacements as are required and testing shall be repeated until satisfactory results are obtained. Pressure test shall be in accordance with ANSI B31.2 with a test pressure of 125 psi. The line shall be pressured with clean, dry air and show no drop in pressurein a two hour period. Contractor shall submit to Engineer a copy of the test report.

Welding - Steel gas pipes shall be field welded and inspected in accordance with ANSI B31.2. Electrodes shall conform to the requirements of API 1104. Welded joints shall be inspected and tested as required by CFR, Title 49, Part 192. Welders shall be qualified for pipeline welding. The Contractor shall submit the welder's qualifications for approval by the Engineer and the utility owner. Welders will be required to weld to the utility owner's specifications prior to being approved unless otherwise waived by the Engineer.

Payment - Gas Line System shall be paid for on a lump sum basis, wherein no measurement shall be made, and shall be paid for at the contract lump sum price, which price shall include furnishing and installing epoxy coated steel gas line, fittings (when required), insulated joints, testing, hangers, rollers, rods, abutment sleeves, link seals, and all miscellaneous hareware; all as detailed on the Gas Line System drawing included herein and within the pay limits shown thereon. Such price shall be full compensation for furnishing all materials, labor, tools, equipment and incidentals necessary to complete the work.

BGL-2.dgn

08-07-2012

Sealed and Signed by:
Julius F.J. Volgyi Jr.
Lic. No. 010487
On the date of
Aug. 7, 2012

A copy of the original sealed and signed standard drawing is on file in the Central Office.

BGL-2

VDOT S&B DIVISION
RICHMOND, VA
STRUCTURAL ENGINEER

No.	Description	Date
	Revisions	

COMMONWEALTH OF VIRGINIA
DEPARTMENT OF TRANSPORTATION

STRUCTURE AND BRIDGE DIVISION

GAS LINE SYSTEM

G. Henderson

Designed: S&B DIV
Drawn: S&B DIV
Checked: S&B DIV

Date

Plan No. BGL-2

Sheet No.

Scale as noted

© 2012, Commonwealth of Virginia

GAS LINE SYSTEM

CONCRETE BEAM SPANS

NOTES TO DESIGNER:

Standard is to be used with concrete beam/girder spans. Maximum beam/girder spacing is limited to 10'-0".

To the extent possible, gas lines shall be placed in the exterior bays of the bridge.

Values in tables on the standard sheet are a composite from several manufacturers/suppliers.

Indicate location and size (diameter) of gas line to be used on the transverse section sheet. Indicate dimension from the bottom of top flange to bottom of angle support at the beam/girder. Indicate dimension from centerline of pipe to centerline of beam/girder. These dimensions must agree with those set on the transverse section sheet. Designer must consider the horizontal expansion loop when setting this dimension. Indicate location of gas line on framing plan. Show centerline and indicate size (diameter) of gas line. Do not show hanger spacing on framing plan.

Utilities Section (R/W) will provide the following information: Size of pipe.

For beam/girder design, the following weights may be used (includes total weight of hangers and pipe). Linear interpolation may be used for actual beam/girder spacing.

Diameter of Pipe (inches)	Weight of Gas Line (lbs./ft.) Beam/Girder Spacing	
	6'-0"	10'-0"
4	29	33
6	34	38
8	50	54
10	58	62
12	65	69
14	70	74
16	79	84
18	86	92
20	94	100

When designing beam/girder, the depth of the beam/girder must be sufficient to insure that the gas line supports at expansion details do not project below the bottom flange.

ADD THE FOLLOWING NOTES, DIMENSIONS, DETAILS, ETC. TO STANDARD:

TYPICAL SUPPORT DETAIL AT EXPANSION JOINT:

Indicate dimension from bottom of top flange (top of web) to bottom of angle support (angle D in Table). Indicate dimension from centerline of pipe to centerline of beam/girder. These dimensions must agree with those set on transverse section sheet.

STATE	FEDERAL AID ROUTE	FEDERAL AID PROJECT	STATE ROUTE	STATE PROJECT	SHEET NO.
VA.	—				

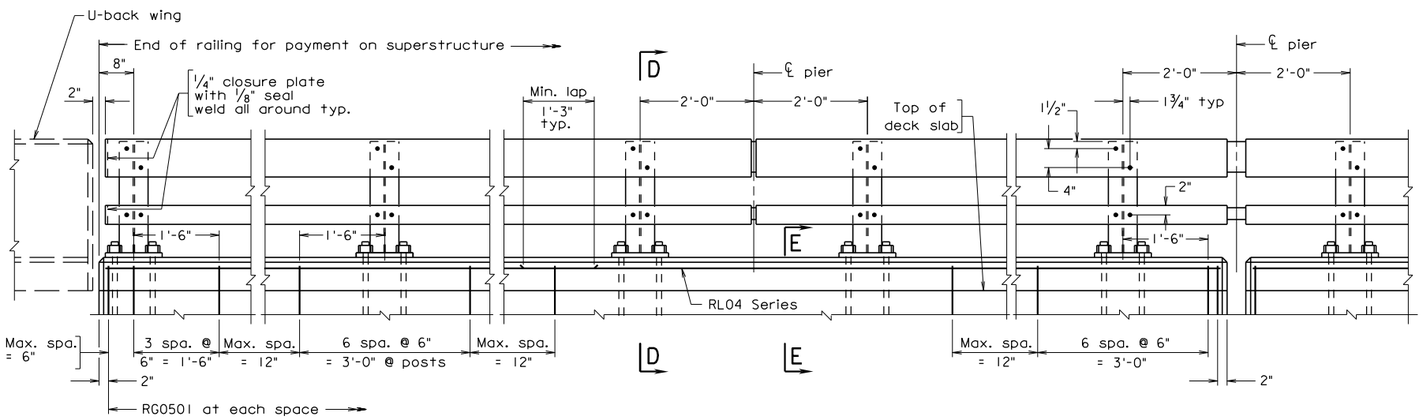

ABUTMENTS

ELEVATION

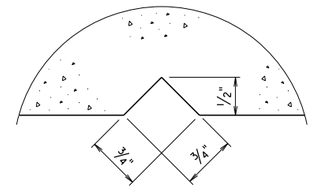

SECTION F-F

Full scale

Groove detail for both sides of parapet

For notes and miscellaneous details, see sheet __.

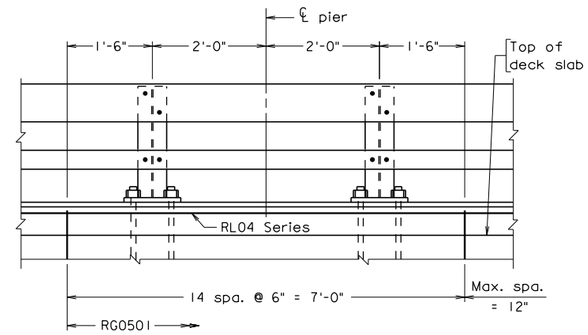

PIERS

Continuous - without joint in slab

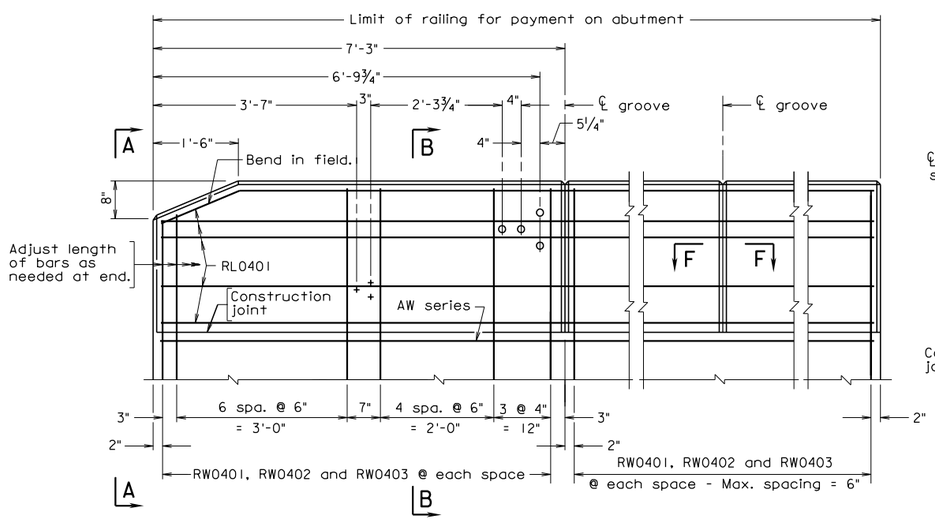

TERMINAL WALL

U-BACK WING

PIERS

with joint in slab

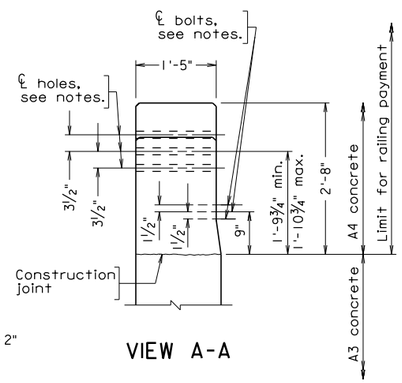

VIEW A-A

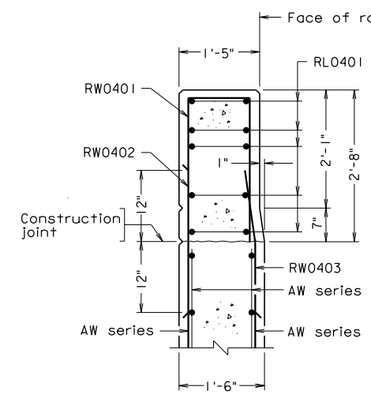

SECTION B-B

REINFORCING STEEL SCHEDULE

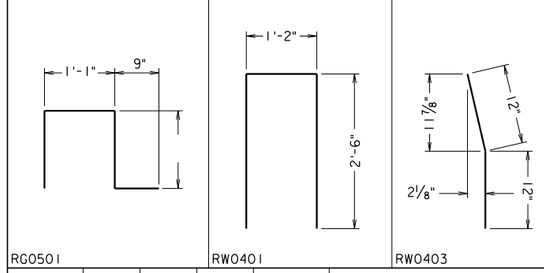

Mark	No.	Size	Pin ø	Length	Location
RG0501	·	#5	3 3/4"	·	Curb
RW0401	·	#4	3"	6'-0"	Terminal wall and wing
RW0402	·	#4	—	2'-0"	Terminal wall and wing
RW0403	·	#4	3"	2'-0"	Terminal wall and wing
RL0401	·	#4	—	·	Terminal wall and wing
RL04	·	#4	—	·	Curb
·	·	·	·	·	·
·	·	·	·	·	·

Dimensions in bending diagram are out-to-out of bars.

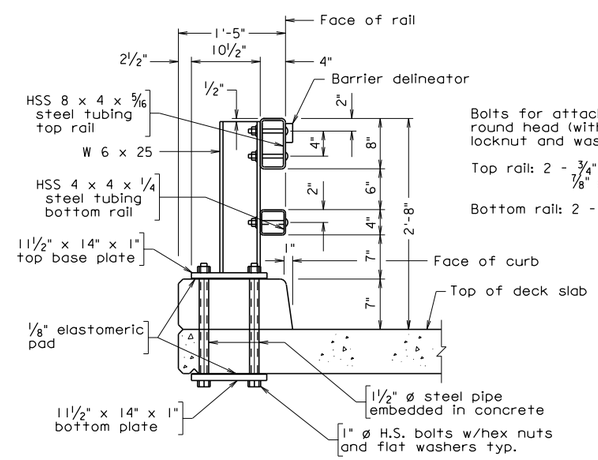

Bolts for attaching rails to post are round head (with slot in head) with locknut and washer.

Top rail: 2 - 3/4" ø x 6" bolts with 7/8" ø holes in post and tubing

Bottom rail: 2 - 1/2" ø x 6" bolts with 5/8" ø holes in post and tubing

SECTION D-D

Not to scale

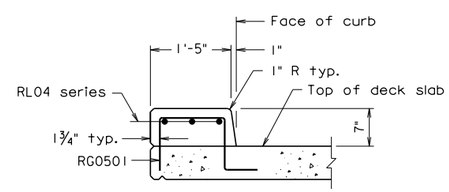

SECTION E-E

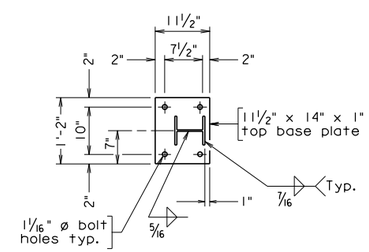

TOP BASE PLATE

(Bottom plate similar)

Scale: 3/4" = 1'-0" unless otherwise shown.

© 2012, Commonwealth of Virginia

No.	Description	Date

Revisions

COMMONWEALTH OF VIRGINIA
DEPARTMENT OF TRANSPORTATION

STRUCTURE AND BRIDGE DIVISION

ILLINOIS STEEL RAILING

Designed: S&B DIV
Drawn: S&B DIV
Checked: S&B DIV

Date

Plan No. BIR-1

Sheet No.

12-14-2012

bir1.dgn

Sealed and Signed by:
Julius F.J. Volgyi Jr.
Lic. No. 010487
On the date of
December 14, 2012

A copy of the original sealed and signed standard drawing is on file in the Central Office.

VDOT S&B DIVISION
RICHMOND, VA
STRUCTURAL ENGINEER

BIR-1

ILLINOIS STEEL RAILING

TERMINAL WALL ON ABUTMENT U-BACK WING

NOTES TO DESIGNER:

The Illinois steel railing has a height of 2'-8" and has been crash tested for TL-2 (TL = test level). The standard has a curb section. This rail is for use as a traffic barrier and shall not be used for sidewalk applications. The standard may be used when an open railing is required.

Standard BIR-3 (miscellaneous details) must be included in plans when using this standard.

Terminal wall is detailed on abutment U-back wing.

If an initial bituminous overlay is used on the bridge at the time of construction, vertical dimensions and dimensions for reinforcing steel need to be adjusted. The dimensions shown are established from the top of the roadway surface. Therefore, for example if a 1" overlay at the curb is set, the 7" curb dimension and the overall 2'-8" height of the rail would need to be adjusted to 8" and 2'-9" respectively. In addition, all height dimensions of bolt locations in relation to top of deck slab need to be adjusted by 1"

It is the Contractor's responsibility to determine the number of reinforcing bars required as well as any details or dimensions. Therefore, these items are to be left blank in the Reinforcing Steel Schedule.

AW series bars are included in abutment reinforcement.

ADD THE FOLLOWING NOTES, DIMENSIONS, DETAILS, ETC. TO STANDARD:

VIEW A-A:

Modify vertical dimension 9" and the range (1'-9¾" min. – 1'-10¾" max.) for bolt locations as noted above if an initial overlay is used on bridge.

SECTION B-B:

Modify vertical dimension (7" break and 2'-8" railing height) as noted above if an initial overlay is used on bridge

SECTION D-D:

Modify vertical dimensions (7" curb and 2'-8" railing height) as noted above if an initial overlay is used on bridge.

ILLINOIS STEEL RAILING

TERMINAL WALL ON ABUTMENT U-BACK WING

ADD THE FOLLOWING NOTES, DIMENSIONS, DETAILS, ETC. TO STANDARD: (cont'd)

SECTION E-E:

Modify vertical dimension (7" curb) as noted above if an initial overlay is used on bridge.

REINFORCING STEEL SCHEDULE:

Modify bars if needed due to slab depth, cross slope, or initial overlay is used on bridge.

Complete length for rebar RG0501.

STATE	FEDERAL AID ROUTE	FEDERAL AID PROJECT	STATE ROUTE	STATE PROJECT	SHEET NO.
VA.	—				

For notes and miscellaneous details, see sheet ___.

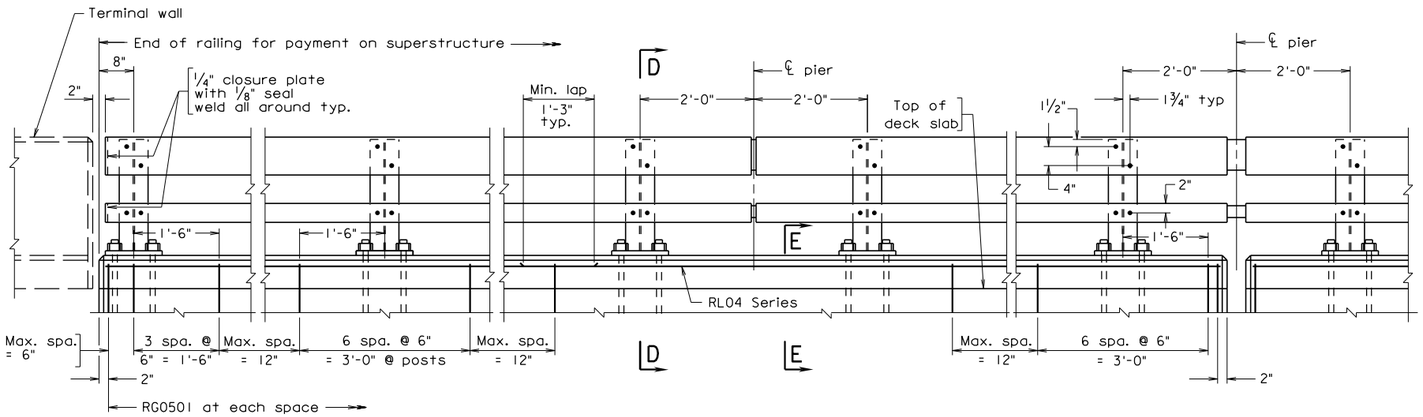

ABUTMENTS

ELEVATION

PIERS
with joint in slab

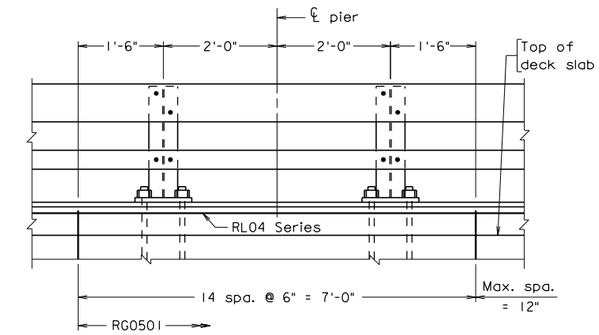

PIERS
Continuous - without joint in slab

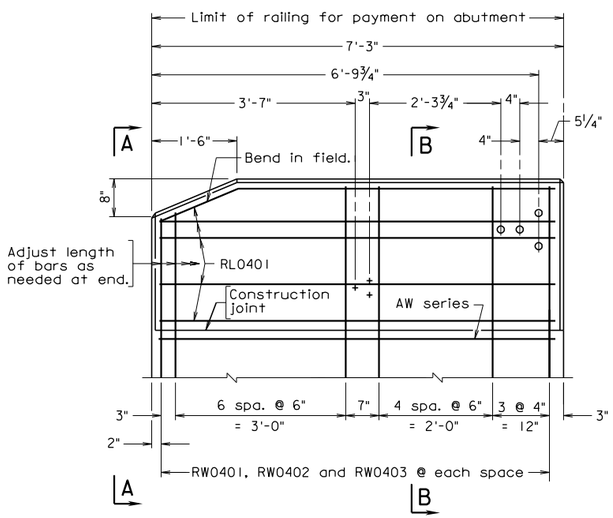

TERMINAL WALL

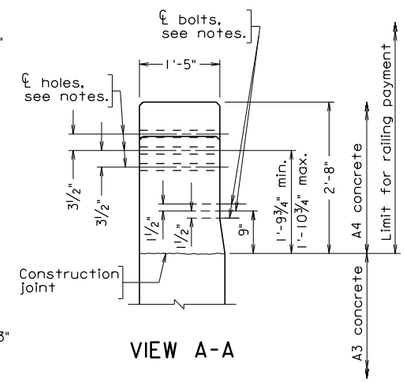

VIEW A-A

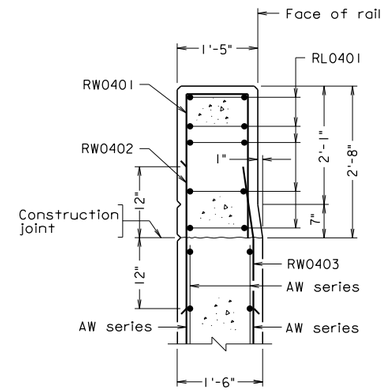

SECTION B-B

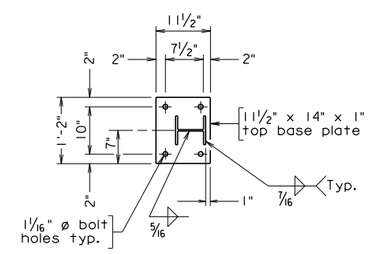

TOP BASE PLATE
(Bottom plate similar)

REINFORCING STEEL SCHEDULE

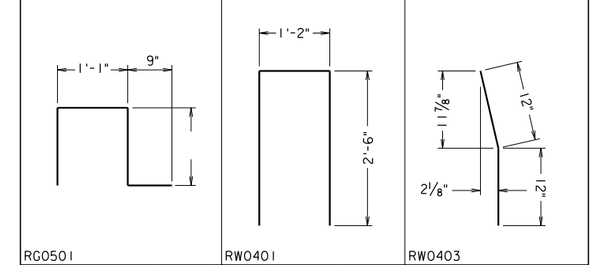

Mark	No.	Size	Pin ø	Length	Location
RG0501	·	#5	3 3/4"	·	Curb
RW0401	·	#4	3"	6'-0"	Terminal wall
RW0402	·	#4	—	2'-0"	Terminal wall
RW0403	·	#4	3"	2'-0"	Terminal wall
RL0401	·	#4	—	6'-11"	Terminal wall
RL04	·	#4	—	·	Curb
·	·	·	·	·	·
·	·	·	·	·	·

Dimensions in bending diagram are out-to-out of bars.

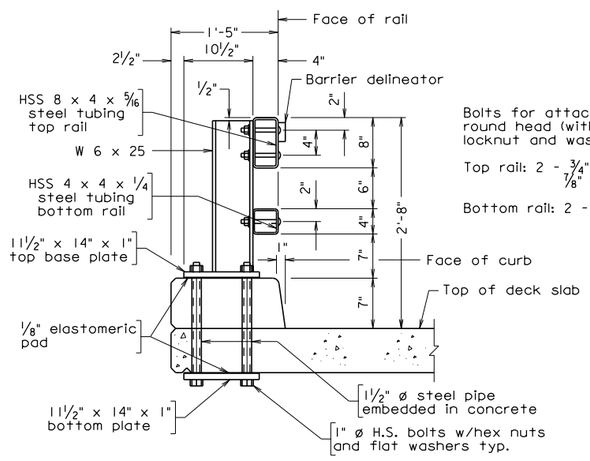

Bolts for attaching rails to post are round head (with slot in head) with locknut and washer.

Top rail: 2 - 3/4" ø x 6" bolts with 7/8" ø holes in post and tubing

Bottom rail: 2 - 1/2" ø x 6" bolts with 5/8" ø holes in post and tubing

SECTION D-D
Not to scale

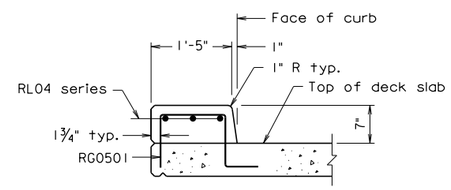

SECTION E-E

Scale: 3/4" = 1'-0" unless otherwise shown.

© 2012, Commonwealth of Virginia

No.	Description	Date

Revisions

COMMONWEALTH OF VIRGINIA
DEPARTMENT OF TRANSPORTATION

STRUCTURE AND BRIDGE DIVISION

ILLINOIS STEEL RAILING

Designed: S&B DIV
Drawn: S&B DIV
Checked: S&B DIV

Date

Plan No. BIR-2

Sheet No.

Sealed and Signed by:
Julius F.J. Volgyi Jr.
Lic. No. 010487
On the date of
December 14, 2012

A copy of the original sealed and signed standard drawing is on file in the Central Office.

VDOT S&B DIVISION
RICHMOND, VA
STRUCTURAL ENGINEER

12-14-2012

bir2.dgn

BIR-2

ILLINOIS STEEL RAILING

TERMINAL WALL ON ABUTMENT WINGWALL

NOTES TO DESIGNER:

The Illinois steel railing has a height of 2'-8" and has been crash tested for TL-2 (TL = test level). The standard has a curb section. This rail is for use as a traffic barrier and shall not be used for sidewalk applications. The standard may be used when an open railing is required.

Standard BIR-3 (miscellaneous details) must be included in plans when using this standard.

Terminal wall is detailed on abutment wingwall.

If an initial bituminous overlay is used on the bridge at the time of construction, vertical dimensions and dimensions for reinforcing steel need to be adjusted. The dimensions shown are established from the top of the roadway surface. Therefore, for example if a 1" overlay at the curb is set, the 7" curb dimension and the overall 2'-8" height of the rail would need to be adjusted to 8" and 2'-9" respectively. In addition, all height dimensions of bolt locations in relation to top of deck slab need to be adjusted by 1"

It is the Contractor's responsibility to determine the number of reinforcing bars required as well as any details or dimensions. Therefore, these items are to be left blank in the Reinforcing Steel Schedule.

AW series bars are included in abutment reinforcement.

ADD THE FOLLOWING NOTES, DIMENSIONS, DETAILS, ETC. TO STANDARD:

VIEW A-A:

Modify vertical dimension 9" and the range (1'-9¾" min. – 1'-10¾" max.) for bolt locations as noted above if an initial overlay is used on bridge.

SECTION B-B:

Modify vertical dimension (7" break and 2'-8" railing height) as noted above if an initial overlay is used on bridge

SECTION D-D:

Modify vertical dimensions (7" curb and 2'-8" railing height) as noted above if an initial overlay is used on bridge.

ILLINOIS STEEL RAILING

TERMINAL WALL ON ABUTMENT WINGWALL

ADD THE FOLLOWING NOTES, DIMENSIONS, DETAILS, ETC. TO STANDARD: (cont'd)

SECTION E-E:

Modify vertical dimension (7" curb) as noted above if an initial overlay is used on bridge.

REINFORCING STEEL SCHEDULE:

Modify bars if needed due to slab depth, cross slope, or initial overlay is used on bridge.

Complete length for rebar RG0501.

STATE	FEDERAL AID ROUTE	FEDERAL AID PROJECT	STATE ROUTE	STATE PROJECT	SHEET NO.
VA.	—				

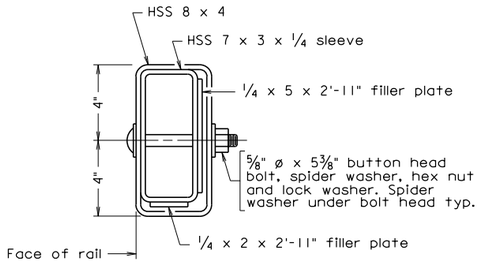

TOP RAIL

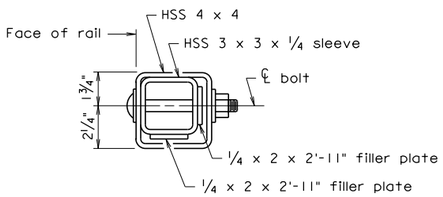

BOTTOM RAIL

END VIEW RAIL

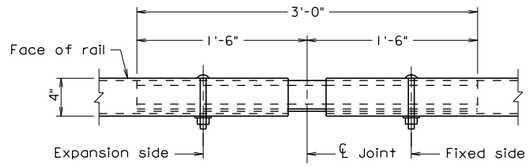

TOP VIEW FOR TOP AND BOTTOM RAILS

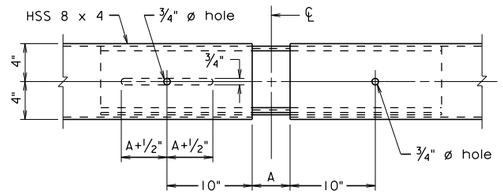

SIDE VIEW TOP RAIL

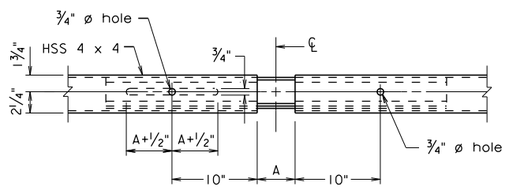

SIDE VIEW BOTTOM RAIL

EXPANSION/SPLICE JOINT DETAILS

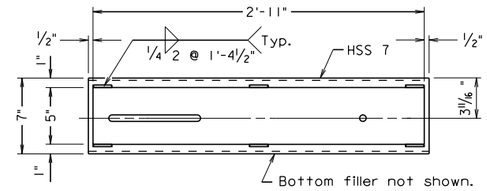

SIDE VIEW FILLER PLATE FOR 7" SLEEVE

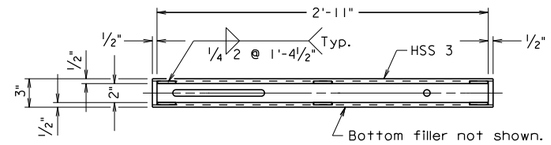

SIDE VIEW FILLER PLATE FOR 3" SLEEVE

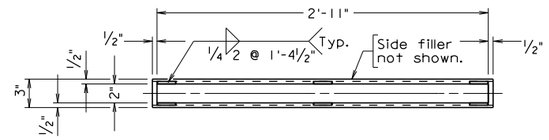

BOTTOM VIEW FILLER PLATE FOR 7" AND 3" SLEEVE

WELDED FILLER PLATE DETAILS

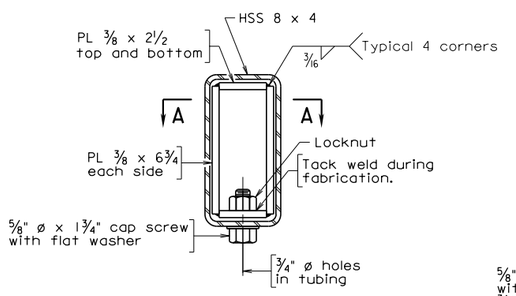

TOP RAIL

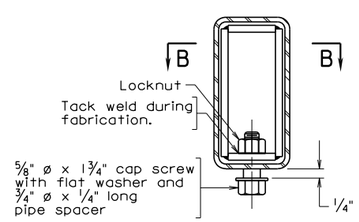

RAIL SPLICE CONNECTION AT EXPANSION JOINT

Details shown for top rail. Details for bottom rail similar.

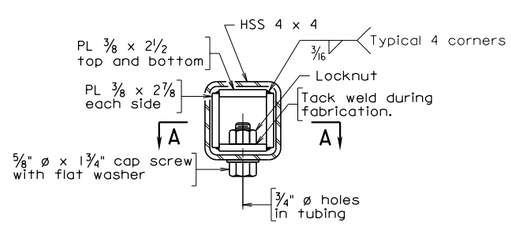

BOTTOM RAIL

SECTION AT RAIL SPLICE

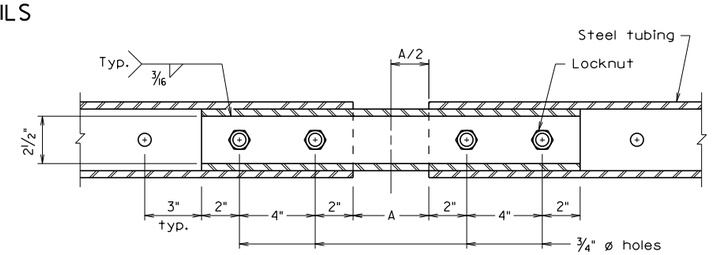

SECTION A-A

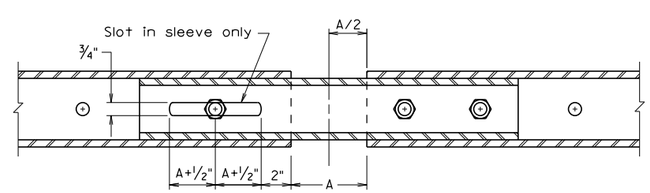

SECTION B-B

For details and dimensions not shown, see Section A-A.

ALTERNATE EXPANSION/SPLICE JOINT DETAILS

Not to scale

© 2012, Commonwealth of Virginia

Notes:

All reinforcing bars shall be Corrosion Resistant Reinforcing Steel, Class __.

All concrete shall be Class A4.

All bevels for concrete on this sheet shall be 3/4".

Posts and plates shall be ASTM A36 steel.

Rail members and sleeves shall be ASTM A500 Grade B steel. Steel pipe sleeves shall be ASTM A53. Round head bolts shall be ASTM A449. All other bolts shall be ASTM A325. Nuts shall be ASTM A563, Grade DH or ASTM A194, Grade 2H and washers shall be ASTM F436. All steel shall be hot dip galvanized.

Post shall be seated on neoprene pads 1/16" minimum thickness, having a nominal durometer hardness of 60. Pads shall conform to post base dimensions.

Cut bottom of posts to match cross slope before welding so that posts will be vertical. Steel shims may be used for adjusting post alignment, maximum thickness of shim build-up not to exceed 1/8". Where more tilting of the post is required, the concrete shall be ground down.

Anchor bolts may be set normal to profile grade.

Steel bridge rail expansion joints shall be provided between any two posts which span a bridge expansion joint. Bolts located on expansion side shall be tightened only to a point that will allow railing movement.

For details of wingwall below construction joint, see abutment sheet(s).

Terminal walls are detailed to take guardrail attachment GR-FOA-1.

Holes, where shown, shall be formed with sleeves of 1 1/2" diameter nominal pipe.

Bolts for guardrail attachment where shown shall be 5/8" diameter expansion anchor bolts 6" long to be drilled and installed when rub rail is attached.

Bid item for railing shall include rails, rail posts, bearing pads, anchor assemblies, sleeves and other associated metal parts as shown on the plans. Also included in bid item are concrete noted in plans and reinforcing steel indicated in Reinforcing Steel Schedule.

Barrier delineator size, color, and spacing to be in accordance with the Specifications. Cost of delineator to be included in the price bid for railing. Reflective surface of barrier delineator, in all instances, to be facing oncoming traffic.

1/2" ø drain holes shall be provided in both top and bottom rails approximately half-way between posts except at open joints near pier(s). Drain holes shall be provided at each low end of rail.

The Contractor shall determine all dimensions and details necessary for installation.

Plan dimensions shown are measured in the respective horizontal and vertical planes. The reinforcing steel shown has been detailed based on a standard 1/4" per foot cross slope. The Contractor shall adjust the reinforcing steel as required for other cross slopes.

For rail details, see sheet __.

Fabricator's notes:

Rails to be continuous over a minimum of 3 posts before splicing. Dimension A for splice joints = 1".

Posts shall be equally spaced. Maximum spacing is 6'-0". Minimum spacing is 4'-0".

Rail expansion joint shall be provided between any two posts which span a bridge expansion joint. Dimension A for expansion joints is equal to deck joint opening + 1". Bolts in slot shall be tightened only to a point that will allow railing movement.

bir3.dgn

12-14-2012

Sealed and Signed by: Julius F.J. Volgyi Jr. Lic. No. 010487 On the date of December 14, 2012

A copy of the original sealed and signed standard drawing is on file in the Central Office.

VDOT S&B DIVISION RICHMOND, VA STRUCTURAL ENGINEER

BIR-3

No.	Description	Date
	Revisions	

COMMONWEALTH OF VIRGINIA
DEPARTMENT OF TRANSPORTATION

STRUCTURE AND BRIDGE DIVISION

ILLINOIS STEEL RAILING MISCELLANEOUS DETAILS

Designed: S&B..DIV
Drawn: ....S&B..DIV
Checked: S&B..DIV

Date

Plan No. BIR-3

Sheet No.

ILLINOIS STEEL RAILING

MISCELLANEOUS DETAILS

NOTES TO DESIGNER:

Include this standard when using standard BIR-1 or BIR-2.

ADD THE FOLLOWING NOTES, DIMENSIONS, DETAILS, ETC. TO STANDARD:

NOTES:

Complete first note by adding the Class I, II or III of corrosion resistant reinforcing steel required. For additional information on corrosion resistant reinforcing steel (CRR), see Structure and Bridge Division Memorandum (current IIM-S&B-81).

STATE	FEDERAL AID ROUTE	FEDERAL AID PROJECT	STATE ROUTE	STATE PROJECT	SHEET NO.
VA.	—				

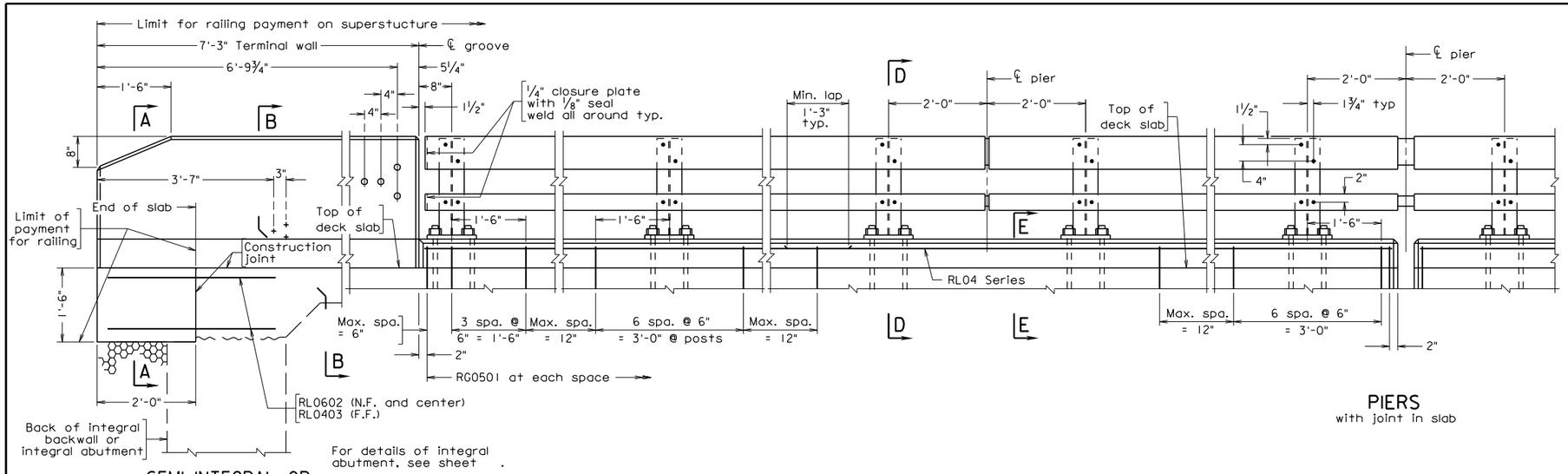

SEMI-INTEGRAL OR FULL INTEGRAL ABUTMENT

ELEVATION

PIERS
with joint in slab

For notes and miscellaneous details, see sheet ___.

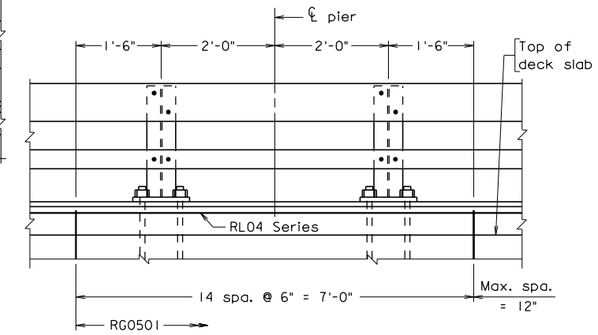

PIERS
Continuous - without joint in slab

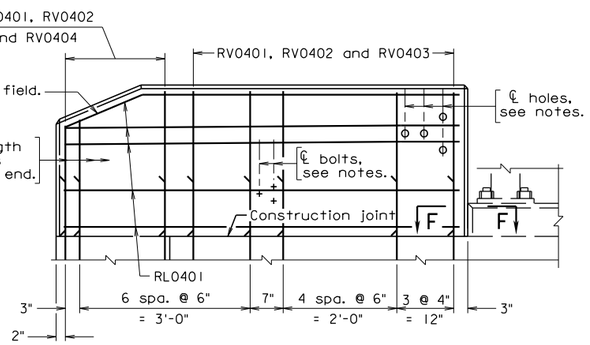

TERMINAL WALL

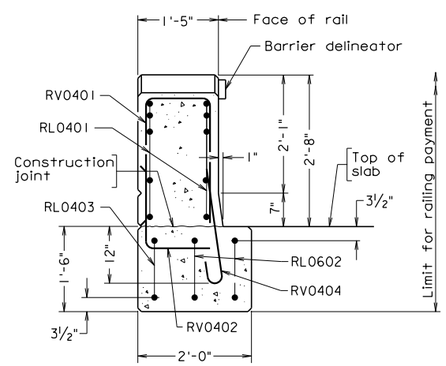

SECTION A-A

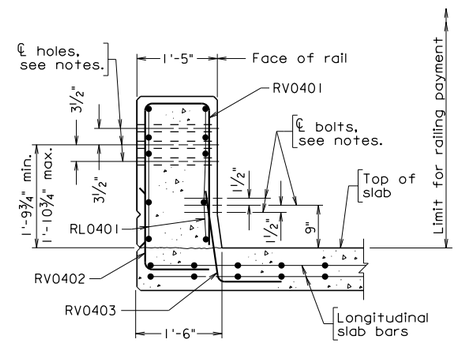

SECTION B-B

REINFORCING STEEL SCHEDULE

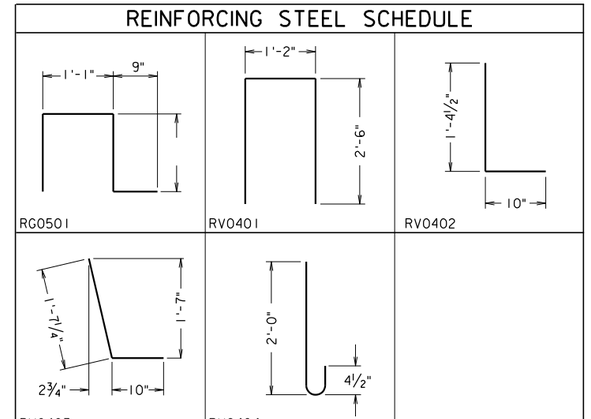

Mark	No.	Size	Pin ø	Length	Location
RG0501	·	#5	3¾"	·	Curb
RV0401	·	#4	3"	6'-0"	Terminal wall
RV0402	·	#4	3"	2'-2"	Terminal wall, deck slab and terminal wall end support
RV0403	·	#4	3"	2'-4"	Terminal wall and deck slab
RV0404	·	#4	3"	2'-6"	Terminal wall and terminal wall end support
RL0401	·	#4	—	6'-11"	Terminal wall
RL0602	·	#6	—	4'-0"	Terminal wall end support
RL0403	·	#4	—	4'-0"	Terminal wall end support
RL04	·	#4	—	·	Curb
·	·	·	·	·	·

Dimensions in bending diagram are out-to-out of bars.

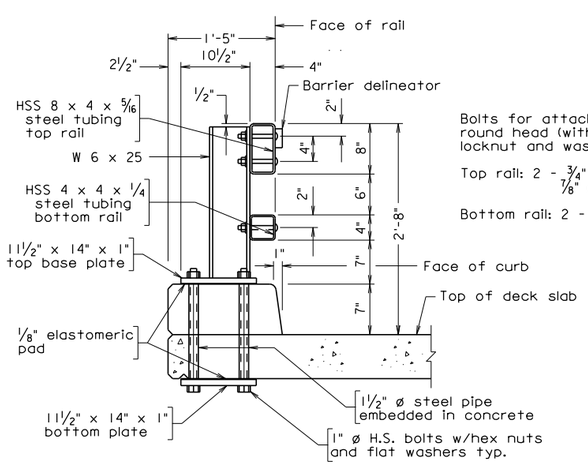

Bolts for attaching rails to post are round head (with slot in head) with locknut and washer.

Top rail: 2 - ¾" ø x 6" bolts with ⅞" ø holes in post and tubing

Bottom rail: 2 - ½" ø x 6" bolts with ⅝" ø holes in post and tubing

SECTION D-D
Not to scale

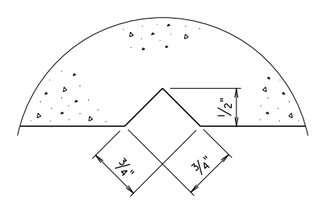

SECTION F-F
Full scale
Groove detail for both sides of parapet

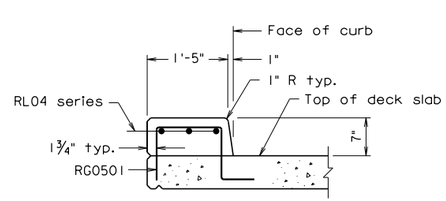

SECTION E-E

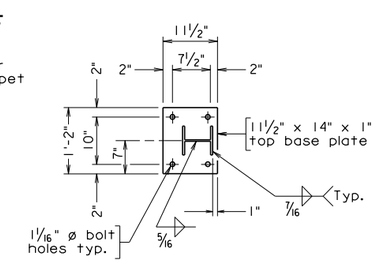

TOP BASE PLATE
(Bottom plate similar)

Scale: ¾" = 1'-0" unless otherwise shown.

© 2012, Commonwealth of Virginia

12-14-2012 bir4.dgn

Sealed and Signed by: Julius F.J. Volgyi Jr. Lic. No. 010487 On the date of December 14, 2012

A copy of the original sealed and signed standard drawing is on file in the Central Office.

VDOT S&B DIVISION
RICHMOND, VA
STRUCTURAL ENGINEER

BIR-4

No.	Description	Date
	Revisions	

COMMONWEALTH OF VIRGINIA
DEPARTMENT OF TRANSPORTATION

STRUCTURE AND BRIDGE DIVISION

ILLINOIS STEEL RAILING

Designed: S&B DIV
Drawn: S&B DIV
Checked: S&B DIV

Date

Plan No. BIR-4

Sheet No.

ILLINOIS STEEL RAILING

TERMINAL WALL ON SUPERSTRUCTURE WITH FULL INTEGRAL OR SEMI-INTEGRAL ABUTMENT

NOTES TO DESIGNER:

The Illinois steel railing has a height of 2'-8" and has been crash tested for TL-2 (TL = test level). The standard has a curb section. This rail is for use as a traffic barrier and shall not be used for sidewalk applications. The standard may be used when an open railing is required.

Standard BIR-3 (miscellaneous details) must be included in plans when using this standard.

Terminal wall is detailed on the deck slab of a superstructure with full integral or semi-integral abutment. A 2'-0" wide section at the edge of superstructure is extended 2'-0" from the end of deck slab to support the end of the terminal wall. This concrete section and the terminal wall shall be part of the steel railing for payment. The superstructure plan would need to be adjusted to reflect the slab extension at the corner of the end deck slab.

If an initial bituminous overlay is used on the bridge at the time of construction, vertical dimensions and dimensions for reinforcing steel need to be adjusted. The dimensions shown are established from the top of the roadway surface. Therefore, for example if a 1" overlay at the curb is set, the 7" curb dimension and the overall 2'-8" height of the rail would need to be adjusted to 8" and 2'-9" respectively. In addition, all height dimensions of bolt locations in relation to top of deck slab need to be adjusted by 1"

It is the Contractor's responsibility to determine the number of reinforcing bars required as well as any details or dimensions. Therefore, these items are to be left blank in the Reinforcing Steel Schedule.

ADD THE FOLLOWING NOTES, DIMENSIONS, DETAILS, ETC. TO STANDARD:

SECTION A-A:

Modify vertical dimensions (7" break and 2'-8" railing height) as noted above if an initial overlay is used on bridge.

SECTION B-B:

Modify vertical dimension 9" and the range (1'-9¾" min. – 1'-10¾" max.) for bolt locations as noted above if an initial overlay is used on bridge

ILLINOIS STEEL RAILING

TERMINAL WALL ON SUPERSTRUCTURE WITH FULL INTEGRAL OR SEMI-INTEGRAL ABUTMENT

ADD THE FOLLOWING NOTES, DIMENSIONS, DETAILS, ETC. TO STANDARD: (cont'd)

SECTION D-D:

Modify vertical dimensions (7" curb and 2'-8" railing height) as noted above if an initial overlay is used on bridge.

SECTION E-E:

Modify vertical dimension (7" curb) as noted above if an initial overlay is used on bridge.

REINFORCING STEEL SCHEDULE:

Modify bars if needed due to slab depth, cross slope, or initial overlay is used on bridge.

Complete length for rebar RG0501.

STATE	FEDERAL AID ROUTE	FEDERAL AID PROJECT	STATE ROUTE	STATE PROJECT	SHEET NO.
VA.	—				

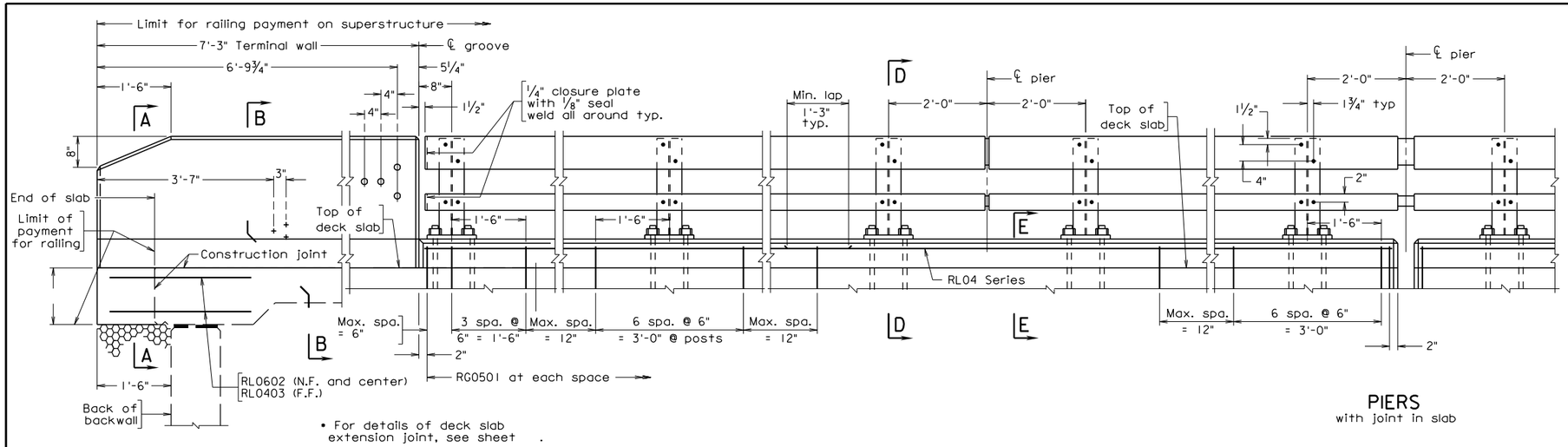

• For details of deck slab extension joint, see sheet .

DECK SLAB EXTENSION ABUTMENT

ELEVATION

PIERS
with joint in slab

For notes and miscellaneous details, see sheet __.

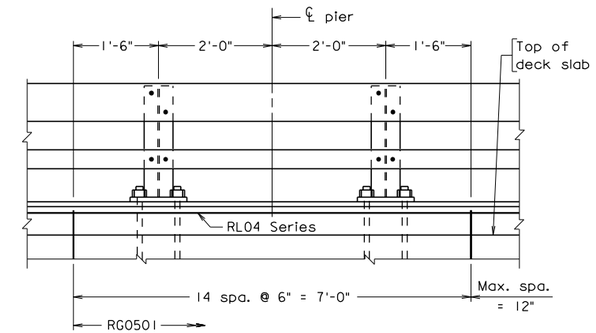

PIERS
Continuous - without joint in slab

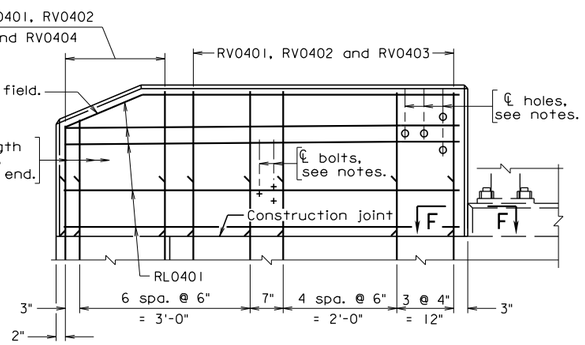

TERMINAL WALL

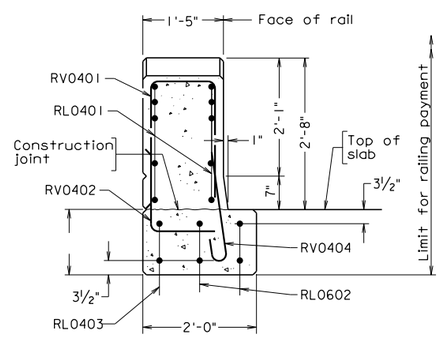

SECTION A-A

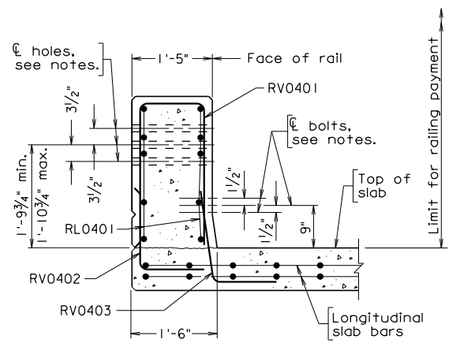

SECTION B-B

REINFORCING STEEL SCHEDULE

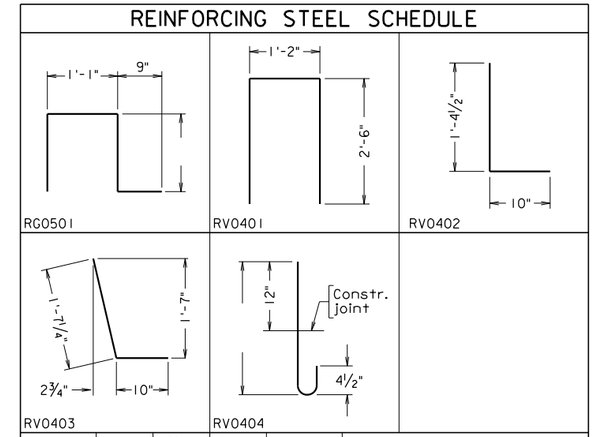

Mark	No.	Size	Pin ø	Length	Location
RG0501	·	#5	3¾"	·	Curb
RV0401	·	#4	3"	6'-0"	Terminal wall
RV0402	·	#4	3"	2'-2"	Terminal wall, deck slab and terminal wall end support
RV0403	·	#4	3"	2'-4"	Terminal wall and deck slab
RV0404	·	#4	3"	·	Terminal wall and terminal wall end support
RL0401	·	#4	—	6'-11"	Terminal wall
RL0602	·	#6	—	4'-0"	Terminal wall end support
RL0403	·	#4	—	4'-0"	Terminal wall end support
RL04	·	#4	—	·	Curb
·	·	·	·	·	·

Dimensions in bending diagram are out-to-out of bars.

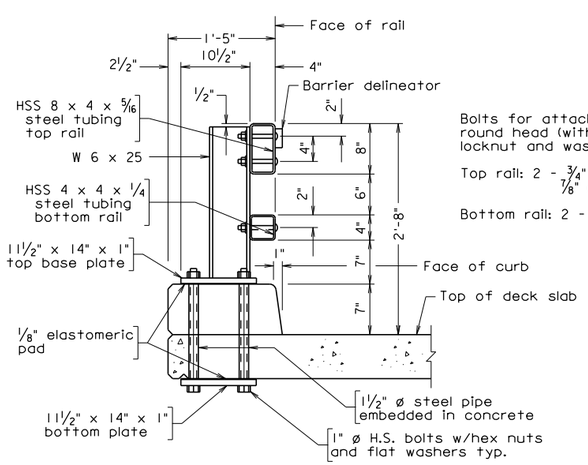

Bolts for attaching rails to post are round head (with slot in head) with locknut and washer.

Top rail: 2 - ¾" ø x 6" bolts with ⅞" ø holes in post and tubing

Bottom rail: 2 - ½" ø x 6" bolts with ⅝" ø holes in post and tubing

SECTION D-D
Not to scale

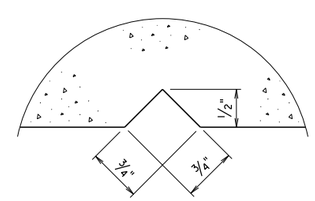

SECTION F-F
Full scale

Groove detail for both sides of parapet

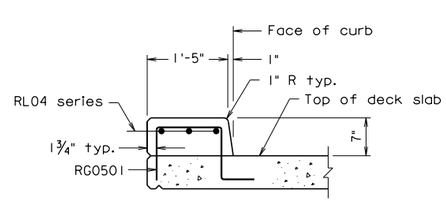

SECTION E-E

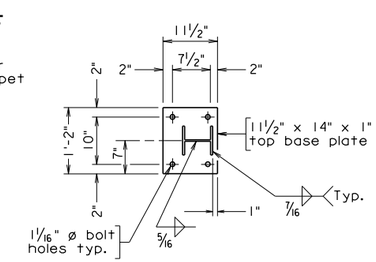

TOP BASE PLATE
(Bottom plate similar)

Scale: ¾" = 1'-0" unless otherwise shown.

© 2012, Commonwealth of Virginia

bir5.dgn

12-14-2012

BIR-5

Sealed and Signed by: Julius F.J. Volgyi Jr. Lic. No. 010487 On the date of December 14, 2012

A copy of the original sealed and signed standard drawing is on file in the Central Office.

VDOT S&B DIVISION
RICHMOND, VA
STRUCTURAL ENGINEER

No.	Description	Date

Revisions

COMMONWEALTH OF VIRGINIA
DEPARTMENT OF TRANSPORTATION

STRUCTURE AND BRIDGE DIVISION

ILLINOIS STEEL RAILING

Designed: S&B DIV
Drawn: S&B DIV
Checked: S&B DIV

Date

Plan No. BIR-5

Sheet No.

ILLINOIS STEEL RAILING

TERMINAL WALL ON SUPERSTRUCTURE WITH DECK SLAB EXTENSION

NOTES TO DESIGNER:

The Illinois steel railing has a height of 2'-8" and has been crash tested for TL-2 (TL = test level). The standard has a curb section. This rail is for use as a traffic barrier and shall not be used for sidewalk applications. The standard may be used when an open railing is required.

Standard BIR-3 (miscellaneous details) must be included in plans when using this standard.

Terminal wall is detailed on the deck slab extension of a superstructure or a slab span. A 2'-0" wide section from the edge of superstructure is extended further from the end of deck slab to an overall distance of 1'-6" from the end of the terminal wall to the back of abutment backwall. This extended concrete section and the terminal wall shall be part of the steel railing for payment. The superstructure plan would need to be adjusted to reflect the 1'-6" slab extension at the corner of the end deck slab.

If an initial bituminous overlay is used on the bridge at the time of construction, vertical dimensions and dimensions for reinforcing steel need to be adjusted. The dimensions shown are established from the top of the roadway surface. Therefore, for example if a 1" overlay at the curb is set, the 7" curb dimension and the overall 2'-8" height of the rail would need to be adjusted to 8" and 2'-9" respectively. In addition, all height dimensions of bolt locations in relation to top of deck slab need to be adjusted by 1"

It is the Contractor's responsibility to determine the number of reinforcing bars required as well as any details or dimensions. Therefore, these items are to be left blank in the Reinforcing Steel Schedule.

ADD THE FOLLOWING NOTES, DIMENSIONS, DETAILS, ETC. TO STANDARD:

ELEVATION:

Provide dimension for terminal wall end support.

SECTION A-A:

Modify vertical dimensions (7" break and 2'-8" railing height) as noted above if an initial overlay is used on bridge.

SECTION B-B:

Modify vertical dimension 9" and the range (1'-9¾" min. – 1'-10¾" max.) for bolt locations as noted above if an initial overlay is used on bridge

ILLINOIS STEEL RAILING

TERMINAL WALL ON SUPERSTRUCTURE WITH DECK SLAB EXTENSION

ADD THE FOLLOWING NOTES, DIMENSIONS, DETAILS, ETC. TO STANDARD: (cont'd)

SECTION D-D:

Modify vertical dimensions (7" curb and 2'-8" railing height) as noted above if an initial overlay is used on bridge.

Provide depth for terminal wall end support.

SECTION E-E:

Modify vertical dimension (7" curb) as noted above if an initial overlay is used on bridge.

REINFORCING STEEL SCHEDULE:

Modify bars if needed due to slab depth, cross slope, or initial overlay is used on bridge.

Complete dimension and length for rebar RV0404.

Complete length for rebar RG0501.

STATE	FEDERAL AID ROUTE	FEDERAL AID PROJECT	STATE ROUTE	STATE PROJECT	SHEET NO.
VA.	—				

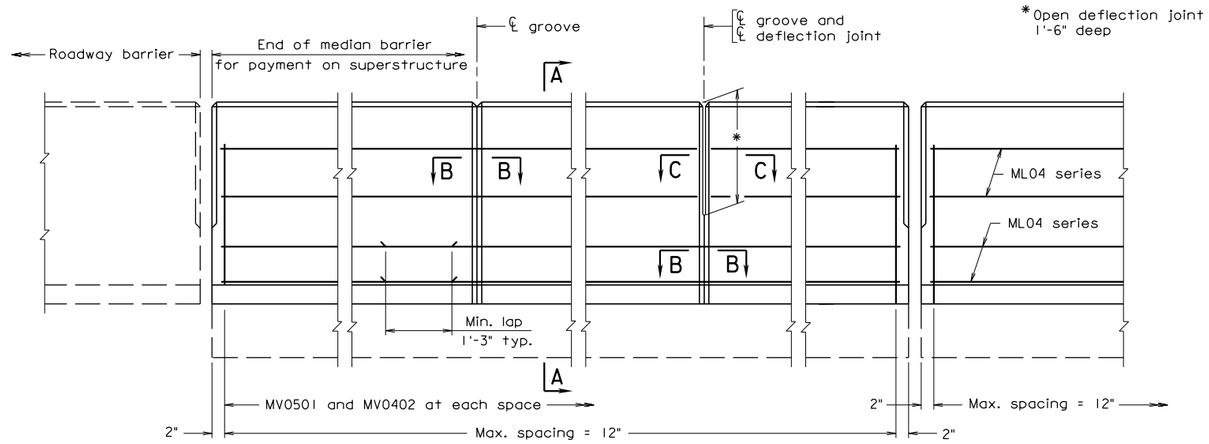

ABUTMENTS

PIERS

ELEVATION

Notes:

Rounded edges with 1" radius may be used in lieu of bevels along top of median barrier.

All reinforcing bars shall be Corrosion Resistant Reinforcing Steel, Class __.

Detail shown at Pier is applicable when joint is in slab. When slab is continuous over Pier, use groove and deflection joint.

Spacing of grooves to be approximately 8'-0". If lighting standard is used (see Bridge Concuit System), groove shall be located approximately 4'-0" from ℄ light standard. Spacing of deflection joints shall not exceed three groove spaces.

Barrier Delineator size, color, and spacing to be in accordance with the Specifications. Cost of Delineator to be included in the price bid for Median Barrier. Reflective surface of Barrier Delineator in all instances, to be facing oncoming traffic.

All concrete shall be Class A4.

The Contractor shall determine all dimensions and details necessary for installation.

Plan dimensions shown are measured in the respective horizontal and vertical planes. The reinforcing steel shown has been detailed based on a standard 1/4" per foot cross slope. The Contractor shall adjust the reinforcing steel as required for other cross slopes.

All concrete shall be Class A4.

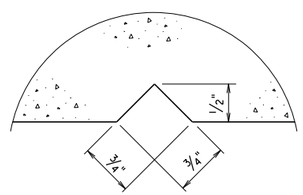

SECTION B-B
Full Scale
Groove detail for both sides of median barrier

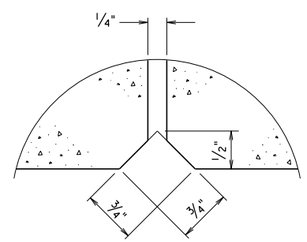

SECTION C-C
Full Scale
Deflection joint detail for both sides of median barrier

ALTERNATE REINFORCING STEEL SCHEDULE

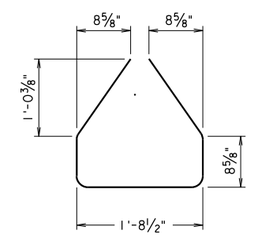

MV0402

Mark	No.	Size	Pin ø	Length	Location
MV0402		#4	3"	5'-5"	Median barrier
ML04		#4	—		Median barrier

Dimensions in bending diagram are out-to-out of bars.

REINFORCING STEEL SCHEDULE

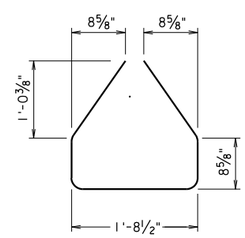

MV0402

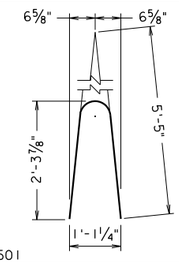

MV0501

Mark	No.	Size	Pin ø	Length	Location
MV0501		#5	7"	5'-1"	Median barrier
MV0402		#4	3"	5'-5"	Median barrier
ML04		#4	—		Median barrier

Dimensions in bending diagram are out-to-out of bars, except as shown.

Gross concrete quantities (C.Y.) = Lin. ft. x 0.121 for all concrete above roadway slab.

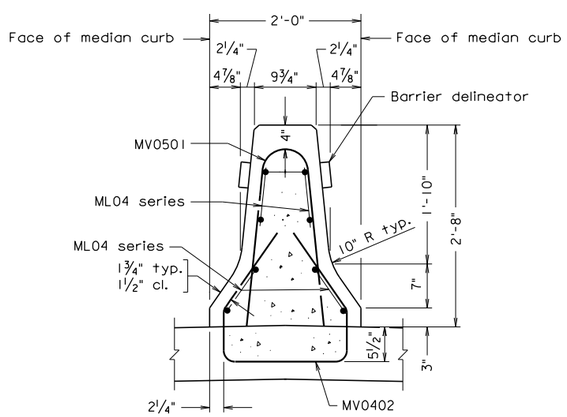

SECTION A-A

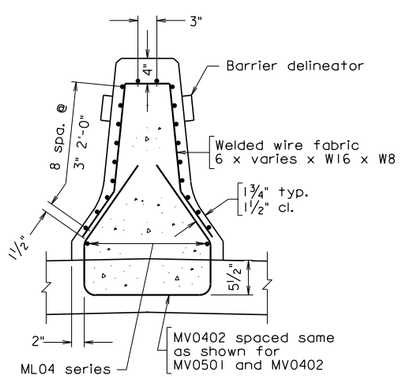

SECTION A-A
ALTERNATE REINFORCING STEEL

Scale: 1" = 1'-0" unless otherwise shown.

© 2012, Commonwealth of Virginia

bmb3a.dgn

12-14-2012

BMB-3A

Sealed and Signed by:
Julius F.J. Volgyi Jr.
Lic. No. 010487
On the date of
December 14, 2012

A copy of the original sealed and signed standard drawing is on file in the Central Office.

VDOT S&B DIVISION
RICHMOND, VA
STRUCTURAL ENGINEER

No.	Description	Date

Revisions

COMMONWEALTH OF VIRGINIA
DEPARTMENT OF TRANSPORTATION

STRUCTURE AND BRIDGE DIVISION

CAST-IN-PLACE CONCRETE MEDIAN BARRIER (F-SHAPE)

Designed: S&B DIV	Date	Plan No.	Sheet No.
Drawn: S&B DIV		BMB-3A	
Checked: S&B DIV			

CAST-IN-PLACE CONCRETE MEDIAN BARRIER

F-SHAPE

NOTES TO DESIGNER:

Standard is used when there is no longitudinal joint in median barrier.

If an initial bituminous overlay is used on the bridge at the time of construction, vertical dimensions and dimensions for reinforcing steel need to be adjusted. The dimensions shown are established from the top of roadway surface. Therefore, for example if a 1" overlay at the median barrier curb is set, the 3" curb dimension and the 2'-8" barrier height would need to be adjusted to 4" and 2'-9" respectively (Section A-A).

It is the Contractor's responsibility to determine the number of reinforcing bars required as well as any details or dimensions. Therefore, these items are to be left blank in the Reinforcing Steel Schedule and Alternate Reinforcing Steel Schedule.

ADD THE FOLLOWING NOTES, DIMENSIONS, DETAILS, ETC. TO STANDARD:

Modify vertical dimensions (3" curb and 2'-8" barrier height) as noted above if an initial overlay is used on bridge.

REINFORCING STEEL SCHEDULE:

Modify bars if needed due to slab depth, cross slope or if an initial overlay is used on bridge.

ALTERNATE REINFORCING STEEL SCHEDULE:

Modify bar MV0402 if needed due to slab depth, cross slope or if an initial overlay is used on bridge.

NOTES:

Complete first note by adding the Class I, II or III of corrosion resistant reinforcing steel required. For additional information on corrosion resistant reinforcing steel (CRR), see Structure and Bridge Division Memorandum (current IIM-S&B-81).

STATE	FEDERAL AID ROUTE	FEDERAL AID PROJECT	STATE ROUTE	STATE PROJECT	SHEET NO.
VA.	—				

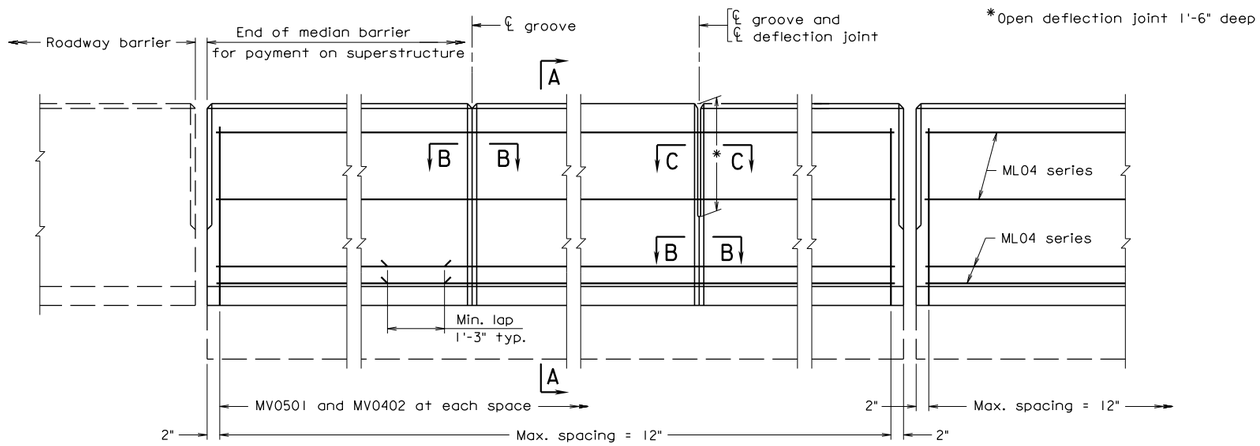

ABUTMENTS

ELEVATION

PIERS

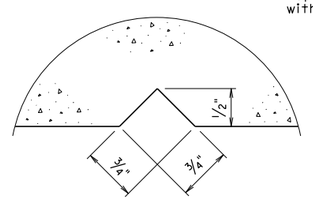

SECTION B-B
Full scale

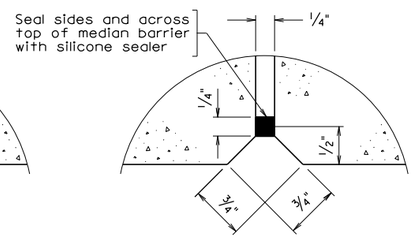

SECTION C-C
Full scale

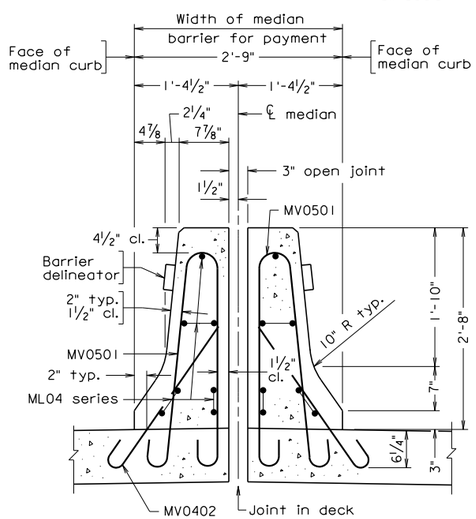

SECTION A-A

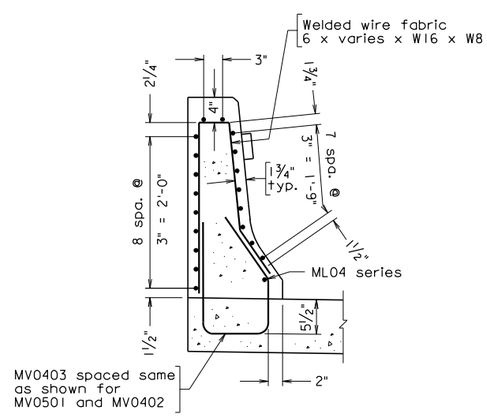

PART SECTION A-A
ALTERNATE REINFORCING STEEL

Notes:

Rounded edges with 1" radius may be used in lieu of bevels along top of median barrier.

All reinforcing bars shall be Corrosion Resistant Reinforcing Steel, Class __.

Detail shown at Pier is applicable when joint is in slab. When slab is continuous over Pier, use groove and deflection joint.

Spacing of grooves to be approximately 8'-0". If lighting standard is used (see Bridge Concuit System), groove shall be located approximately 4'-0" from ℄ light standard. Spacing of deflection joints shall not exceed three groove spaces.

Joint sealer shall be a polysulfide or polyurethane sealer or an approved alternate sealant. Color of sealer shall be compatible with the concrete.

Barrier Delineator size, color, and spacing to be in accordance with the Specifications. Cost of Delineator to be included in the price bid for Median Barrier. Reflective surface of Barrier in all instances, to be facing oncoming traffic.

All concrete shall be Class A4.

The Contractor shall determine all dimensions and details necessary for installation.

Plan dimensions shown are measured in the respective horizontal and vertical planes. The reinforcing steel shown has been detailed based on a standard 1/4" per foot cross slope. The Contractor shall adjust the reinforcing steel as required for other cross slopes.

ALTERNATE REINFORCING STEEL SCHEDULE

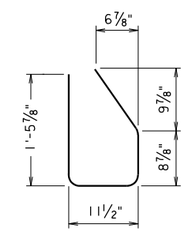

MV0403

Mark	No.	Size	Pin ø	Length	Location
MV0403		#4	3"	4'-0"	Median barrier
ML04		#4	—		Median barrier

Dimensions in bending diagram are out-to-out of bars.

REINFORCING STEEL SCHEDULE

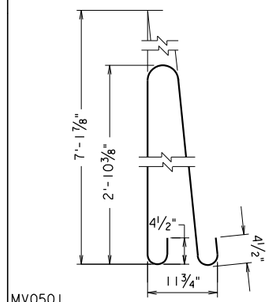

MV0501

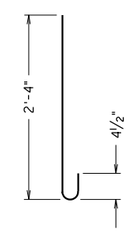

MV0402

Mark	No.	Size	Pin ø	Length	Location
MV0501		#5	*4 1/4"	6'-11"	Median barrier
MV0402		#4	2"	2'-10"	Median barrier
ML04		#4	—		Median barrier

* Pin ø 2 1/2" for hooks at ends

Dimensions in bending diagram are out-to-out of bars, except as shown.

Gross concrete quantities (C.Y.) = Lin. ft. x 0.170 for all concrete above roadway slab.

bmb5a.dgn

12-14-2012

BMB-5A

Sealed and Signed by:
Julius F.J. Volgyi Jr.
Lic. No. 010487
On the date of
December 14, 2012

A copy of the original sealed and signed standard drawing is on file in the Central Office.

VDOT S&B DIVISION
RICHMOND, VA
STRUCTURAL ENGINEER

No.	Description	Date
	Revisions	

COMMONWEALTH OF VIRGINIA
DEPARTMENT OF TRANSPORTATION

STRUCTURE AND BRIDGE DIVISION

CAST-IN-PLACE CONCRETE MEDIAN BARRIER (F-SHAPE)

Designed: S&B DIV
Drawn: S&B DIV
Checked: S&B DIV

Date

Plan No. BMB-5A

Sheet No.

Scale: 1" = 1'-0" unless otherwise shown.

©2012, Commonwealth of Virginia

CAST-IN-PLACE CONCRETE (SPLIT) MEDIAN BARRIER

F-SHAPE

NOTES TO DESIGNER:

Standard is used when there is longitudinal joint in median barrier. Although the joint opening of 3" should be satisfactory for most situations, it is up to the designer to adjust the opening if required, e.g., long spans, curved girders with small radii.

If an initial bituminous overlay is used on the bridge at the time of construction, vertical dimensions and dimensions for reinforcing steel need to be adjusted. The dimensions shown are established from the top of roadway surface. Therefore, for example if a 1" overlay at the median barrier curb is set, the 3" curb dimension and the 2'-8" barrier height would need to be adjusted to 4" and 2'-9" respectively (Section A-A).

It is the Contractor's responsibility to determine the number of reinforcing bars required as well as any details or dimensions. Therefore, these items are to be left blank in the Reinforcing Steel Schedule and Alternate Reinforcing Steel Schedule.

ADD THE FOLLOWING NOTES, DIMENSIONS, DETAILS, ETC. TO STANDARD:

Modify vertical dimensions (3" curb and 2'-8" barrier height) as noted above if an initial overlay is used on bridge.

REINFORCING STEEL SCHEDULE:

Modify bars if needed due to slab depth, cross slope or if an initial overlay is used on bridge.

ALTERNATE REINFORCING STEEL SCHEDULE:

Modify bar MV0403 if needed due to slab depth, cross slope or if an initial overlay is used on bridge.

NOTES:

Complete first note by adding the Class I, II or III of corrosion resistant reinforcing steel required. For additional information on corrosion resistant reinforcing steel (CRR), see Structure and Bridge Division Memorandum (current IIM-S&B-81).

STATE	FEDERAL AID ROUTE	FEDERAL AID PROJECT	STATE ROUTE	STATE PROJECT	SHEET NO.
VA.	—				

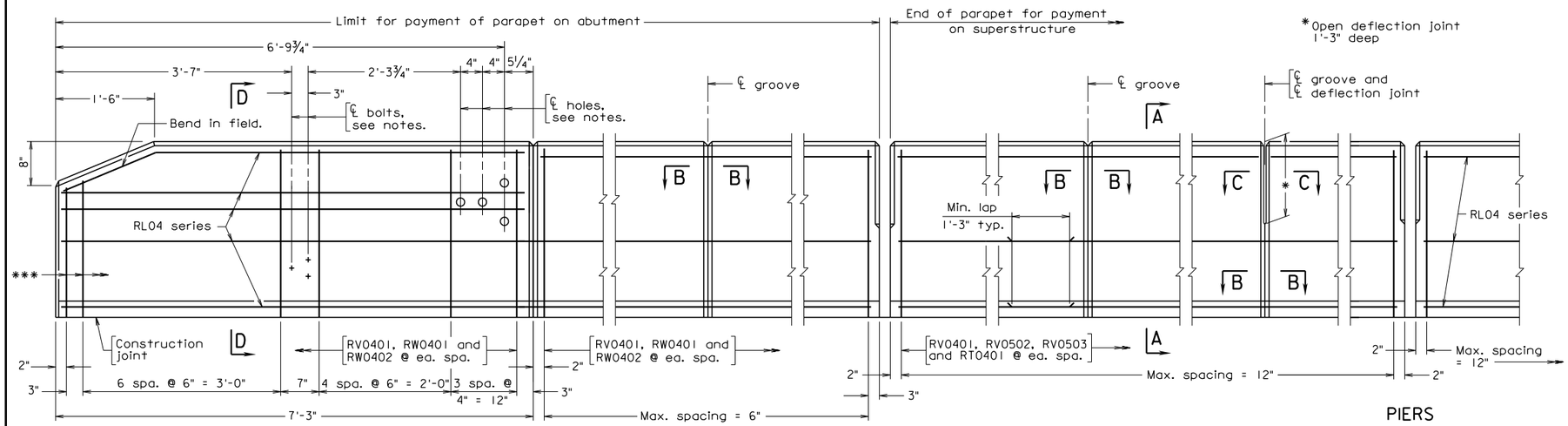

ELEVATION

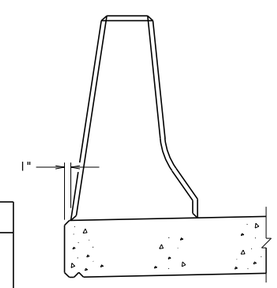

SECTION THRU JOINTS FOR EXTRUSION ONLY

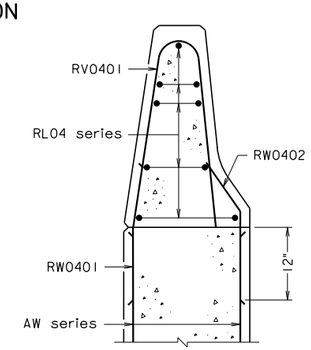

SECTION D-D
Holes and bolts not shown. For details not shown, see Section A-A.

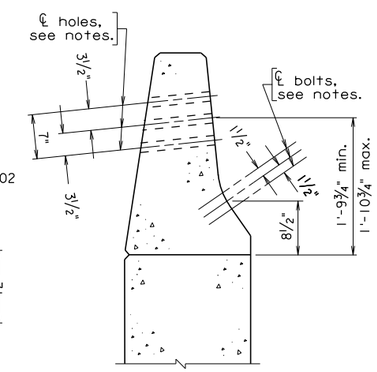

SECTION D-D
Reinforcing steel not shown.

REINFORCING STEEL SCHEDULE

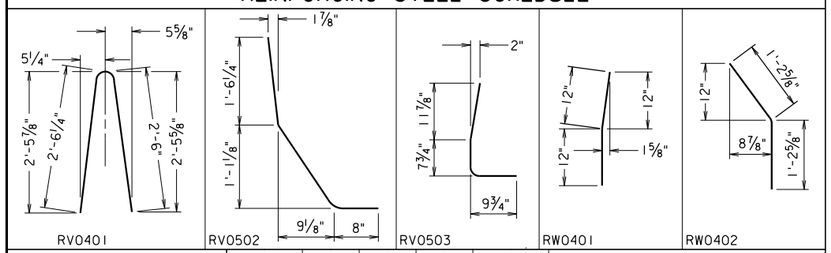

Mark	No.	Size	Pin ø	Length	Location
RT0401	·	#4	—	3'-0"	Slab
RV0401	·	#4	4½"	5'-2"	Parapet
RV0502	·	#5	3¾"	3'-5⅝"	Parapet
RV0503	·	#5	3¾"	2'-4"	Parapet
RW0401	·	#4	3"	2'-0"	Terminal wall and wing
RW0402	·	#4	3"	2'-5"	Terminal wall and wing
RL04	·	#4	—	·	Parapet

Dimensions in bending diagram are out-to-out of bars, except as shown.

Cost of all bars listed in schedule to be included in price bid for parapet.

Gross concrete quantities (C.Y.) = Lin. Ft. x 0.105
All concrete above roadway slab

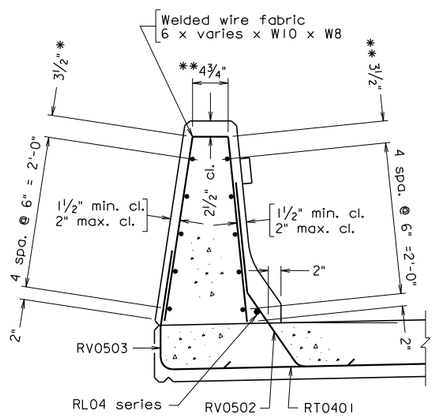

**Dimensions are out-to-out of wires.

SECTION A-A
ALTERNATE REINFORCING STEEL

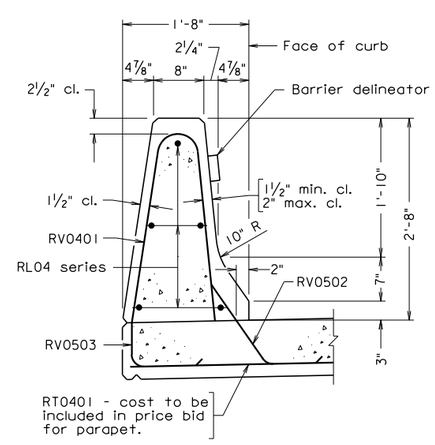

SECTION A-A

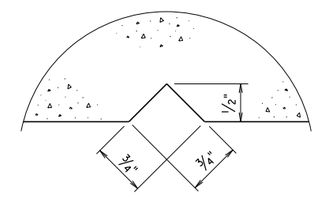

SECTION B-B
Full scale
Groove detail for both sides of parapet

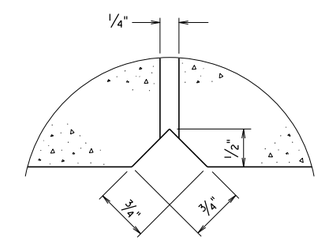

SECTION C-C
Full scale
Deflection joint detail for both sides of parapet

Notes:

Rounded edges with 1" radius may be used in lieu of bevels along top of parapet.

All reinforcing bars shall be Corrosion Resistant Reinforcing Steel, Class __.

Detail shown at pier is applicable when joint is in slab. When slab is continuous over pier, use groove and deflection joint.

Spacing of grooves to be approximately 8'-0". If lighting standard is used (see Bridge Conduit System), groove shall be located approximately 4'-0" from ℄ light standard. Spacing of deflection joints shall not exceed three groove spaces.

Barrier delineator size, color, and spacing to be in accordance with the Specifications. Cost of delineator to be included in the price bid for parapet. Reflective surface of barrier delineator, in all instances, to be facing oncoming traffic.

The Contractor shall determine all dimensions and details necessary for installation.

All concrete shall be Class A4.

For details of wingwall below construction joint, see abutment sheet(s).

Terminal walls are detailed to take guardrail attachment GR-FOA-2.

Holes, where shown, shall be formed with sleeves of 1½" dia. nominal pipe.

Bolts, where shown, shall be ⅝" dia. expansion anchor bolts, 6" long to be drilled and installed when rub rail is attached.

For extruded parapets: During extrusion, open joints at abutments and piers shall be formed by the use of lubricated plates or other means so that uniformity of the opening and chamfers is maintained. Dimension of 1" (as shown in Section thru Joints for Extrusion Only) is additional deck slab that shall be cast at Contractor's expense. Dimension(s) to face of curb shall not be reduced.

Plan dimensions shown are measured in the respective horizontal and vertical planes. The reinforcing steel shown has been detailed based on a standard ¼" per foot cross slope. The Contractor shall adjust the reinforcing steel as required for other cross slopes.

bpb3a.dgn

12-14-2012

BPB-3A

Sealed and Signed by:
Julius F.J. Volgyi Jr.
Lic. No. 010487
On the date of
December 14, 2012

A copy of the original sealed and signed standard drawing is on file in the Central Office.

VDOT S&B DIVISION
RICHMOND, VA
STRUCTURAL ENGINEER

Scale: 1" = 1'-0" unless otherwise shown.

© 2012, Commonwealth of Virginia

No.	Description	Date

Revisions

COMMONWEALTH OF VIRGINIA
DEPARTMENT OF TRANSPORTATION

STRUCTURE AND BRIDGE DIVISION

CAST-IN-PLACE CONCRETE PARAPET (F-SHAPE)

Designed: S&B DIV
Drawn: S&B DIV
Checked: S&B DIV

Date

Plan No. BPB-3A

Sheet No.

CAST-IN-PLACE CONCRETE PARAPET F-SHAPE

TERMINAL WALL AND U-BACK ON ABUTMENT

NOTES TO DESIGNER:

The F-shape parapet has a height of 2”-8” and has been crash tested for TL-4 (TL = test level). It is to be used as the normal traffic barrier unless an open rail is required.

Terminal wall and U-back wing are detailed on abutment.

Reinforcing steel dimensions given in the Reinforcing Steel Schedule are for a standard deck with $^{1}/_{4}$" per foot slope and for an 8 $^{1}/_{2}$” slab depth. For other slopes or slab depths, the reinforcing steel dimensions may have to be adjusted.

If an initial bituminous overlay is used on the bridge at the time of construction, vertical dimensions and dimensions for reinforcing steel need to be adjusted. The dimensions shown are established from the top of the roadway surface. Therefore, for example if a 1” overlay at the curb is set, the 3” curb dimension and the overall 2’-8” height of the parapet would need to be adjusted to 4” and 2’-9” respectively (Section A-A). In addition, the 8 $^{1}/_{2}$” and 1’-9” height of the bolts would need to be adjusted to 9 $^{1}/_{2}$” and 1’-10” respectively (View D-D).

It is the Contractor’s responsibility to determine the number of reinforcing bars required as well as any details or dimensions. Therefore, these items are to be left blank in the Reinforcing Steel Schedule.

AW series bars are included in abutment reinforcement.

ADD THE FOLLOWING NOTES, DIMENSIONS, DETAILS, ETC. TO STANDARD:

SECTION A-A:

Modify vertical dimensions (3” curb and 2’-8” parapet height) as noted above if an initial overlay is used on bridge.

SECTION D-D:

Modify vertical dimensions (8 $^{1}/_{2}$” curb and 1’-9” bolt locations) as noted above if an initial overlay is used on bridge.

REINFORCING STEEL SCHEDULE:

Modify bars if needed due to slab depth, cross slope, or initial overlay if used on bridge.

NOTES:

Complete second note by adding the Class I, II or III of corrosion resistant reinforcing steel required. For additional information on corrosion resistant reinforcing steel (CRR), see Structure and Bridge Division Memorandum (current IIM-S&B-81).

STATE	FEDERAL AID ROUTE	FEDERAL AID PROJECT	STATE ROUTE	STATE PROJECT	SHEET NO.
VA.	—				

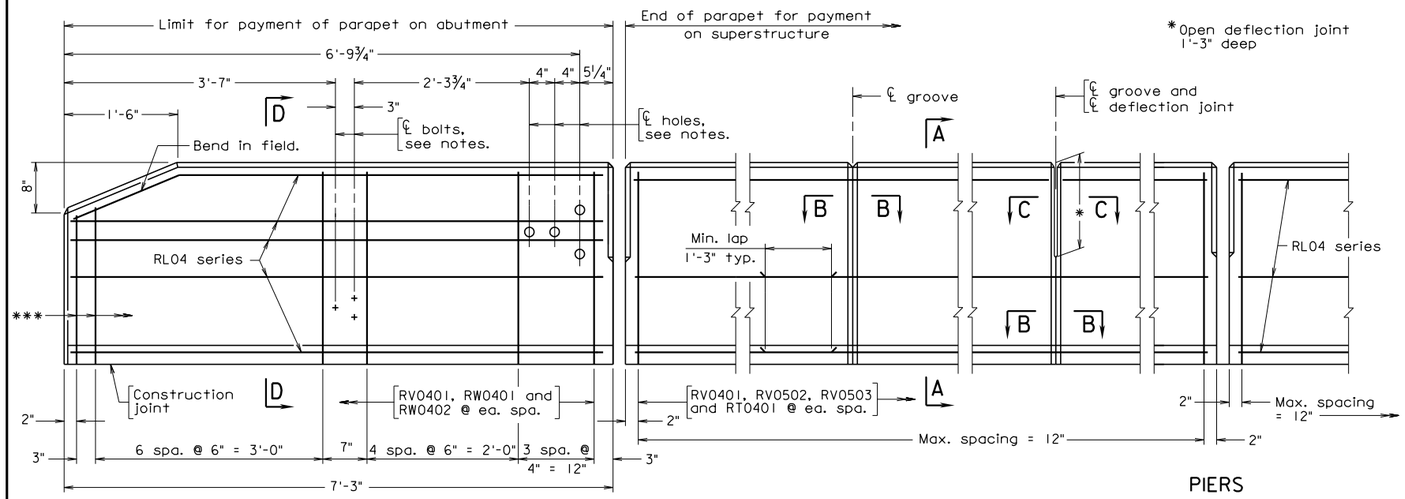

ELEVATION

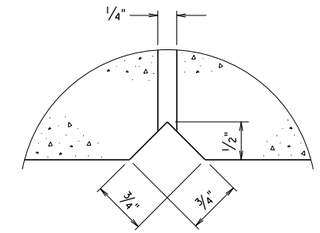

SECTION C-C
Full scale
Deflection joint detail for both sides of parapet

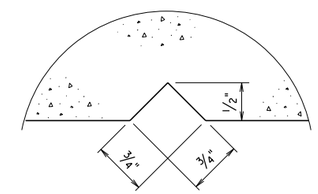

SECTION B-B
Full scale
Groove detail for both sides of parapet

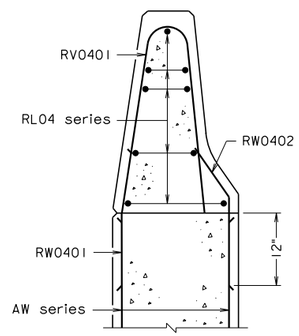

SECTION D-D
Holes and bolts not shown.
For details not shown, see Section A-A.

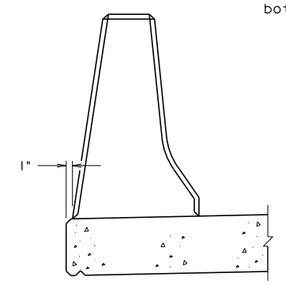

SECTION THRU JOINTS FOR EXTRUSION ONLY

Notes:

Rounded edges with 1" radius may be used in lieu of bevels along top of parapet.

All reinforcing bars shall be Corrosion Resistant Reinforcing Steel, Class __.

Detail shown at pier is applicable when joint is in slab. When slab is continuous over pier, use groove and deflection joint.

Spacing of grooves to be approximately 8'-0". If lighting standard is used (see Bridge Conduit System), groove shall be located approximately 4'-0" from ℄ light standard. Spacing of deflection joints shall not exceed three groove spaces.

Barrier delineator size, color, and spacing to be in accordance with the Specifications. Cost of delineator to be included in the price bid for parapet. Reflective surface of barrier delineator, in all instances, to be facing oncoming traffic.

The Contractor shall determine all dimensions and details necessary for installation.

All concrete shall be Class A4.
For details of wingwall below construction joint, see abutment sheet(s).

Terminal walls are detailed to take guardrail attachment GR-FOA-2.

Holes, where shown, shall be formed with sleeves of 1½" dia. nominal pipe.

Bolts, where shown, shall be ⅝" dia. expansion anchor bolts, 6" long to be drilled and installed when rub rail is attached.

For extruded parapets: During extrusion, open joints at abutments and piers shall be formed by the use of lubricated plates or other means so that uniformity of the opening and chamfers is maintained. Dimension of 1" (as shown in Section thru Joints for Extrusion Only) is additional deck slab that shall be cast at Contractor's expense. Dimension(s) to face of curb shall not be reduced.

Plan dimensions shown are measured in the respective horizontal and vertical planes. The reinforcing steel shown has been detailed based on a standard ¼" per foot cross slope. The Contractor shall adjust the reinforcing steel as required for other cross slopes.

REINFORCING STEEL SCHEDULE

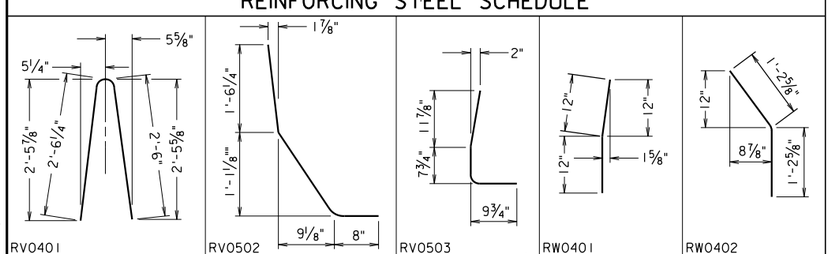

Mark	No.	Size	Pin ø	Length	Location
RT0401	·	#4	—	3'-0"	Slab
RV0401	·	#4	4½"	5'-2"	Parapet
RV0502	·	#5	3¾"	3'-5⅝"	Parapet
RV0503	·	#5	3¾"	2'-4"	Parapet
RW0401	·	#4	3"	2'-0"	Terminal wall and wing
RW0402	·	#4	3"	2'-5"	Terminal wall and wing
RL04	·	#4	—	·	Parapet

Dimensions in bending diagram are out-to-out of bars, except as shown.

Cost of all bars listed in schedule to be included in price bid for parapet.

Gross concrete quantities (C.Y.) = Lin. Ft. x 0.105
All concrete above roadway slab

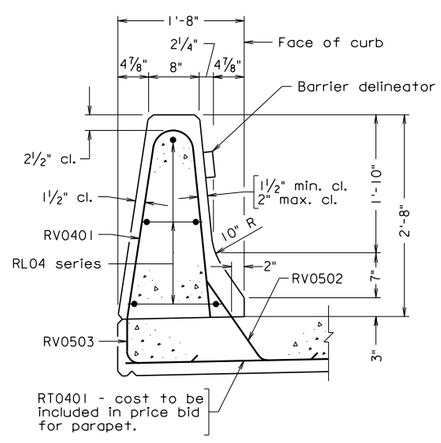

SECTION A-A

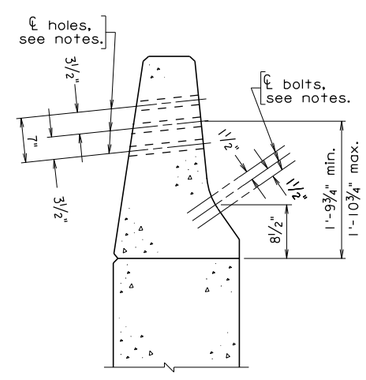

SECTION D-D
Reinforcing steel not shown.

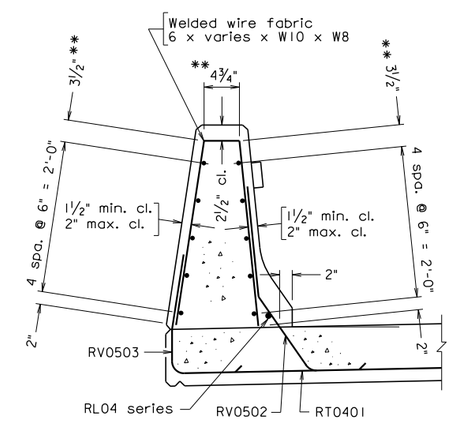

** Dimensions are out-to-out of wires.

SECTION A-A
ALTERNATE REINFORCING STEEL

Scale: 1" = 1'-0" unless otherwise shown.

© 2012, Commonwealth of Virginia

bpb3b.dgn

12-14-2012

Sealed and Signed by:
Julius F.J. Volgyi Jr.
Lic. No. 010487
On the date of
December 14, 2012

A copy of the original sealed and signed standard drawing is on file in the Central Office.

VDOT S&B DIVISION
RICHMOND, VA
STRUCTURAL ENGINEER

BPB-3B

No.	Description	Date
	Revisions	

COMMONWEALTH OF VIRGINIA
DEPARTMENT OF TRANSPORTATION

STRUCTURE AND BRIDGE DIVISION

CAST-IN-PLACE CONCRETE PARAPET (F-SHAPE)

Designed: S&B..DIV
Drawn: ....S&B..DIV
Checked: S&B..DIV

Date

Plan No. BPB-3B

Sheet No.

CAST-IN-PLACE CONCRETE PARAPET F-SHAPE

TERMINAL WALL ON ABUTMENT

NOTES TO DESIGNER:

The F-shape parapet has a height of 2”-8” and has been crash tested for TL-4 (TL = test level). It is to be used as the normal traffic barrier unless an open rail is required.

Terminal wall is detailed on abutment.

Reinforcing steel dimensions given in the Reinforcing Steel Schedule are for a standard deck with $^{1}/_{4}$" per foot slope and for an 8 $^{1}/_{2}$” slab depth. For other slopes or slab depths, the reinforcing steel dimensions may have to be adjusted.

If an initial bituminous overlay is used on the bridge at the time of construction, vertical dimensions and dimensions for reinforcing steel need to be adjusted. The dimensions shown are established from the top of the roadway surface. Therefore, for example if a 1” overlay at the curb is set, the 3” curb dimension and the overall 2’-8” height of the parapet would need to be adjusted to 4” and 2’-9” respectively (Section A-A). In addition, the 8 $^{1}/_{2}$” and 1’-9” height of the bolts would need to be adjusted to 9 $^{1}/_{2}$” and 1’-10” respectively (View D-D).

It is the Contractor’s responsibility to determine the number of reinforcing bars required as well as any details or dimensions. Therefore, these items are to be left blank in the Reinforcing Steel Schedule.

AW series bars are included in abutment reinforcement.

ADD THE FOLLOWING NOTES, DIMENSIONS, DETAILS, ETC. TO STANDARD:

SECTION A-A:

Modify vertical dimensions (3” curb and 2’-8” parapet height) as noted above if an initial overlay is used on bridge.

SECTION D-D:

Modify vertical dimensions (8 $^{1}/_{2}$” curb and 1’-9” bolt locations) as noted above if an initial overlay is used on bridge.

REINFORCING STEEL SCHEDULE:

Modify bars if needed due to slab depth, cross slope, or initial overlay if used on bridge.

NOTES:

Complete first note by adding the Class I, II or III of corrosion resistant reinforcing steel required. For additional information on corrosion resistant reinforcing steel (CRR), see Structure and Bridge Division Memorandum (current IIM-S&B-81).

STATE	FEDERAL AID ROUTE	FEDERAL AID PROJECT	STATE ROUTE	STATE PROJECT	SHEET NO.
VA.	—				

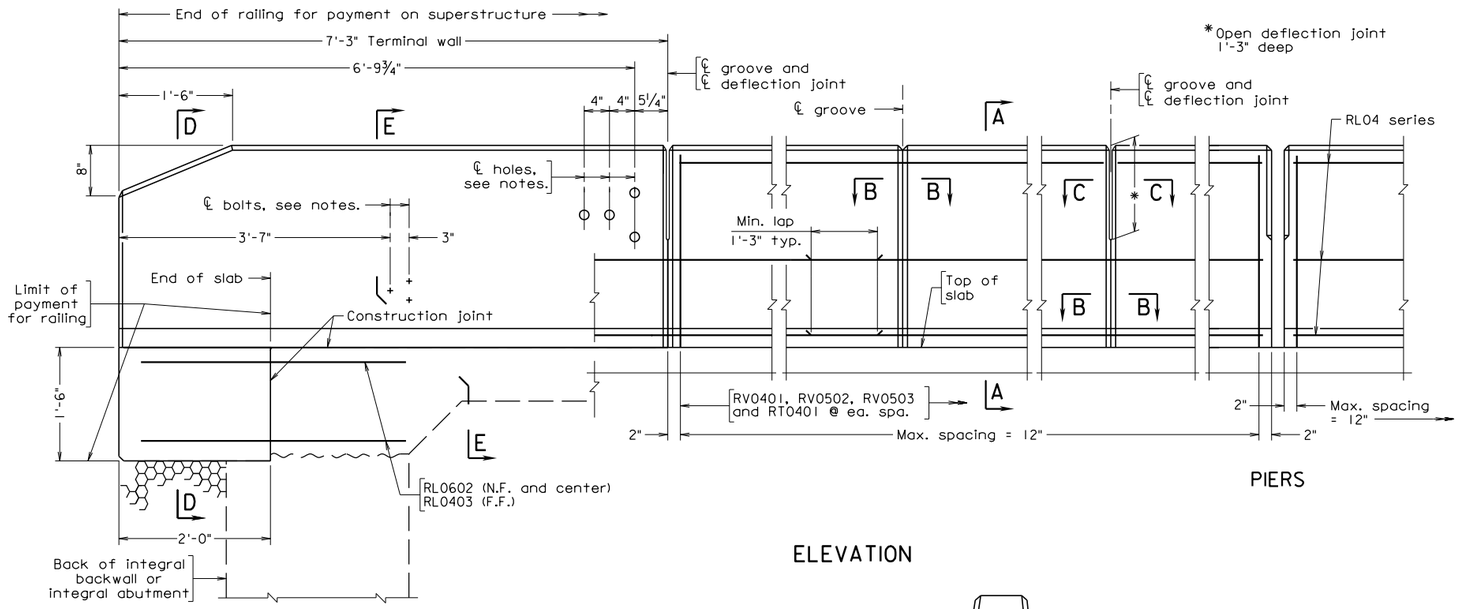

SEMI-INTEGRAL OR FULL INTEGRAL ABUTMENT

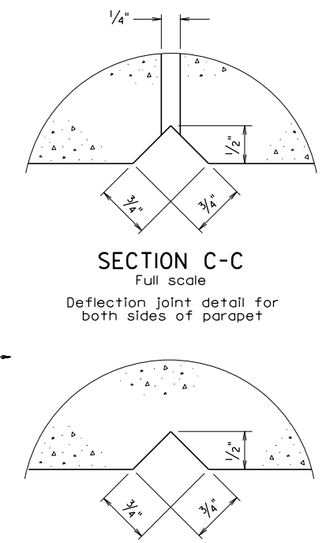

SECTION C-C
Full scale
Deflection joint detail for both sides of parapet

SECTION B-B
Full scale
Groove detail for both sides of parapet

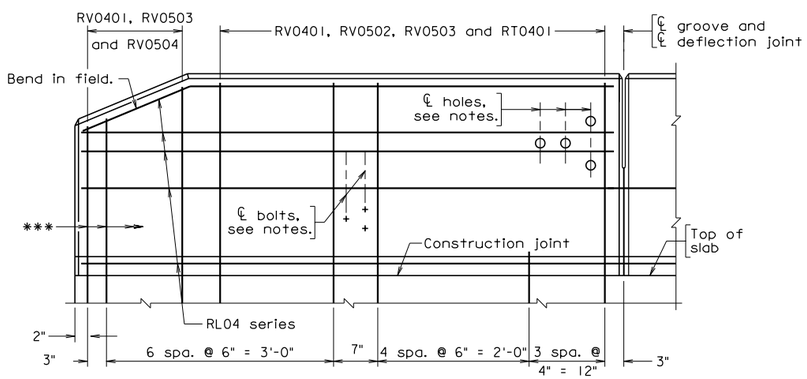

*** Adjust length of bars as needed at end.

TERMINAL WALL

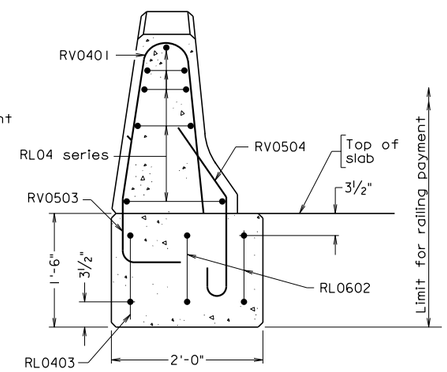

SECTION D-D

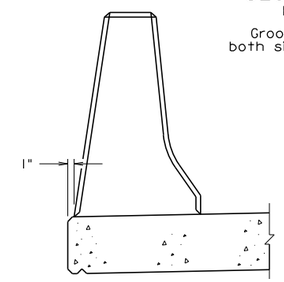

SECTION THRU JOINTS FOR EXTRUSION ONLY

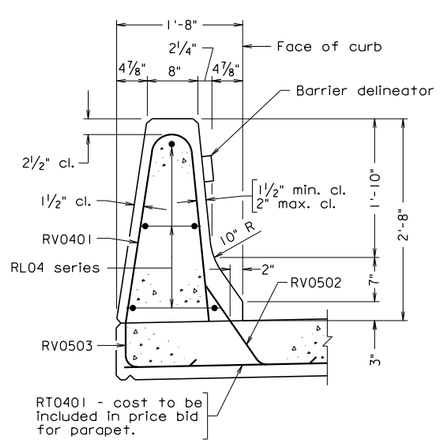

SECTION A-A

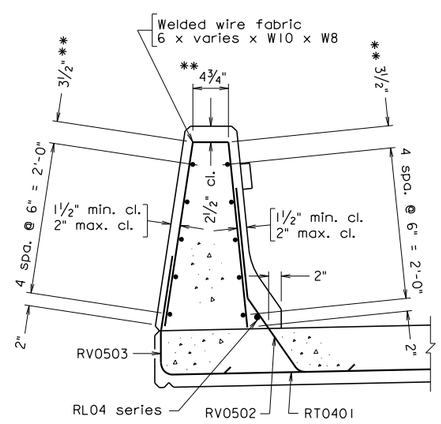

** Dimensions are out-to-out of wires.

SECTION A-A
ALTERNATE REINFORCING STEEL

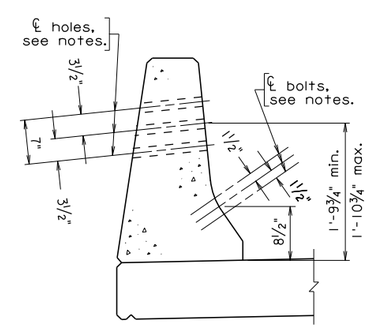

SECTION E-E
Reinforcing steel not shown.

Gross concrete quantities (C.Y.) = Lin. Ft. x 0.105
All concrete above roadway slab

Notes:

Rounded edges with 1" radius may be used in lieu of bevels along top of parapet.

All reinforcing bars shall be Corrosion Resistant Reinforcing Steel, Class __.

Detail shown at pier is applicable when joint is in slab. When slab is continuous over pier, use groove and deflection joint.

Spacing of grooves to be approximately 8'-0". If lighting standard is used (see Bridge Conduit System), groove shall be located approximately 4'-0" from ℄ light standard. Spacing of deflection joints shall not exceed three groove spaces.

Barrier delineator size, color, and spacing to be in accordance with the Specifications. Cost of delineator to be included in the price bid for parapet. Reflective surface of barrier delineator, in all instances, to be facing oncoming traffic.

The Contractor shall determine all dimensions and details necessary for installation.

All concrete shall be Class A4.

For details of integral abutment, see sheet __.

Terminal walls are detailed to take guardrail attachment GR-FOA-2.

Holes, where shown, shall be formed with sleeves of 1½" dia. nominal pipe.

Bolts, where shown, shall be ⅝" dia. expansion anchor bolts, 6" long to be drilled and installed when rub rail is attached.

For extruded parapets: During extrusion, open joints at abutments and piers shall be formed by the use of lubricated plates or other means so that uniformity of the opening and chamfers is maintained. Dimension of 1" (as shown in Section thru Joints for Extrusion Only) is additional deck slab that shall be cast at Contractor's expense. Dimension(s) to face of curb shall not be reduced.

Plan dimensions shown are measured in the respective horizontal and vertical planes. The reinforcing steel shown has been detailed based on a standard ¼" per foot cross slope. The Contractor shall adjust the reinforcing steel as required for other cross slopes.

REINFORCING STEEL SCHEDULE

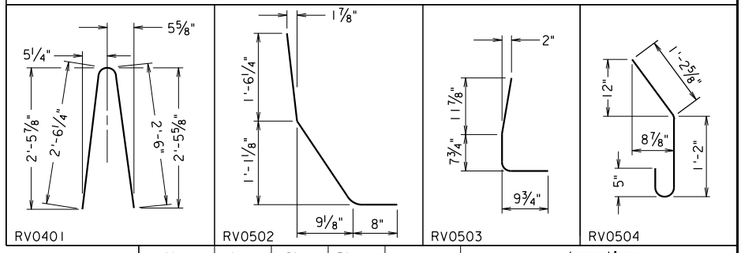

Mark	No.	Size	Pin ø	Length	Location
RT0401	·	#4	—	3'-0"	Slab
RV0401	·	#4	4½"	5'-2"	Parapet and terminal wall
RV0502	·	#5	3¾"	3'-5⅝"	Parapet and terminal wall
RV0503	·	#5	3¾"	2'-4"	Parapet and terminal wall
RV0504	·	#5	3¾"	3'-0"	Terminal wall end support
RL04	·	#4	—	·	Parapet and terminal wall
RL0602	·	#6	—	4'-0"	Terminal wall end support
RL0403	·	#4	—	4'-0"	Terminal wall end support

Dimensions in bending diagram are out-to-out of bars, except as shown.

Cost of all bars listed in schedule to be included in price bid for parapet.

bpb3c.dgn

12-14-2012

BPB-3C

Sealed and Signed by:
Julius F.J. Volgyi Jr.
Lic. No. 010487
On the date of December 14, 2012

A copy of the original sealed and signed standard drawing is on file in the Central Office.

VDOT S&B DIVISION
RICHMOND, VA
STRUCTURAL ENGINEER

No.	Description	Date
	Revisions	

COMMONWEALTH OF VIRGINIA
DEPARTMENT OF TRANSPORTATION

STRUCTURE AND BRIDGE DIVISION

CAST-IN-PLACE CONCRETE PARAPET (F-SHAPE)

Designed: S&B DIV
Drawn: S&B DIV
Checked: S&B DIV

Date

Plan No. BPB-3C

Sheet No.

Scale: 1" = 1'-0" unless otherwise shown.

©2012, Commonwealth of Virginia

CAST-IN-PLACE CONCRETE PARAPET F-SHAPE

TERMINAL WALL ON SUPERSTRUCTURE WITH FULL INTEGRAL OR SEMI-INTEGRAL ABUTMENT

NOTES TO DESIGNER:

The F-shape parapet has a height of 2'-8" and has been crash tested for TL-4 (TL = test level). It is used as the normal traffic barrier unless an open rail is required.

Terminal wall is detailed on superstructure. Standard is used with full integral or semi-integral abutment.

If an initial bituminous overlay is used on the bridge at the time of construction, vertical dimensions and dimensions for reinforcing steel need to be adjusted. The dimensions shown are established from the top of the roadway surface. Therefore, for example if a 1" overlay at the curb is set, the 3" curb dimension and the overall 2'-8" height of the parapet would need to be adjusted to 4" and 2'-9" respectively (Section A-A). In addition, all height dimensions of bolt locations in relation to top of deck slab need to be adjusted by 1" (Section E-E).

It is the Contractor's responsibility to determine the number of reinforcing bars required as well as any details or dimensions. Therefore, these items are to be left blank in the Reinforcing Steel Schedule.

ADD THE FOLLOWING NOTES, DIMENSIONS, DETAILS, ETC. TO STANDARD:

SECTION A-A:

Modify vertical dimensions (3" curb and 2'-8" parapet height) so that these dimensions will be established from top of overlay surface as noted above.

SECTION E-E:

Modify vertical dimension 8½" and the range (1'-9¾" min. – 1'- 10¾" max.) for bolt locations so that these dimensions will be established from top of overlay surface as noted above.

REINFORCING STEEL SCHEDULE:

Modify steel rebars if needed due to slab depth, cross slope, or initial overlay if used on bridge.

NOTES:

Complete second note by adding the Class I, II or III of corrosion resistant reinforcing steel required. For additional information on corrosion resistant reinforcing steel (CRR), see Structure and Bridge Division Memorandum (current IIM-S&B-81).

Complete sheet no. for details of integral abutment.

STATE	FEDERAL AID ROUTE	FEDERAL AID PROJECT	STATE ROUTE	STATE PROJECT	SHEET NO.
VA.	—				

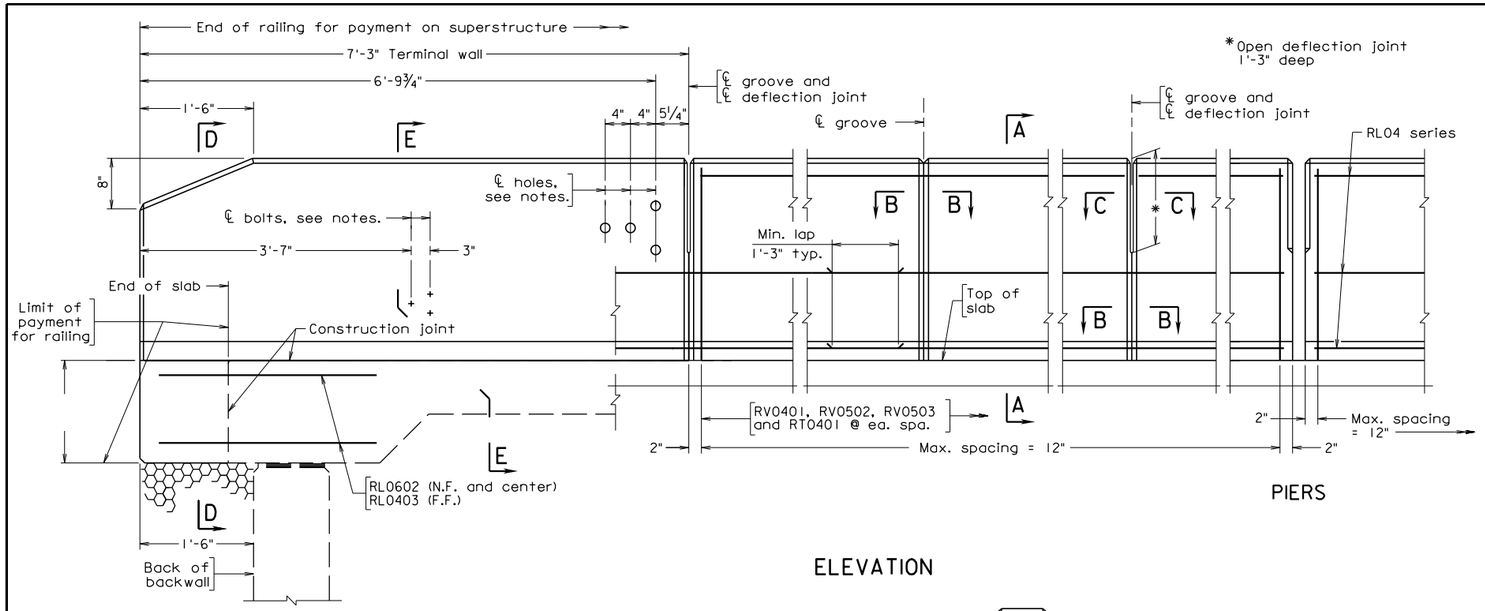

DECK SLAB EXTENSION
ABUTMENT

ELEVATION

PIERS

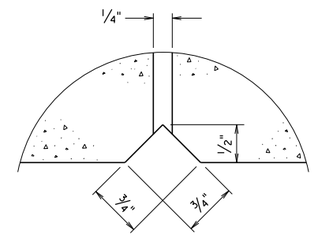

SECTION C-C
Full scale
Deflection joint detail for both sides of parapet

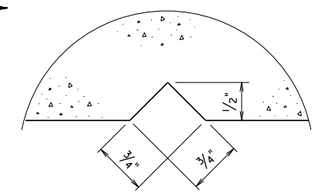

SECTION B-B
Full scale
Groove detail for both sides of parapet

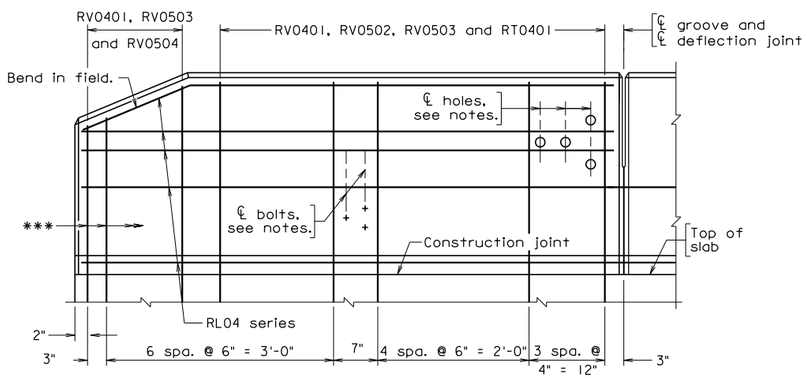

*** Adjust length of bars as needed at end.

TERMINAL WALL

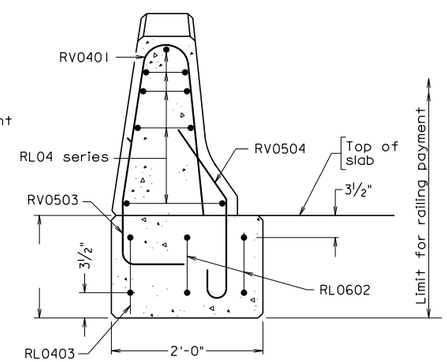

SECTION D-D

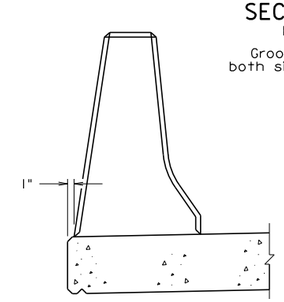

SECTION THRU JOINTS
FOR EXTRUSION ONLY

Notes:

Rounded edges with 1" radius may be used in lieu of bevels along top of parapet.

All reinforcing bars shall be Corrosion Resistant Reinforcing Steel, Class __.

Detail shown at pier is applicable when joint is in slab. When slab is continuous over pier, use groove and deflection joint.

Spacing of grooves to be approximately 8'-0". If lighting standard is used (see Bridge Conduit System), groove shall be located approximately 4'-0" from ℄ light standard. Spacing of deflection joints shall not exceed three groove spaces.

Barrier delineator size, color, and spacing to be in accordance with the Specifications. Cost of delineator to be included in the price bid for parapet. Reflective surface of barrier delineator, in all instances, to be facing oncoming traffic.

The Contractor shall determine all dimensions and details necessary for installation.

All concrete shall be Class A4.

For details of deck slab extension, see sheet __.

Terminal walls are detailed to take guardrail attachment GR-FOA-2.

Holes, where shown, shall be formed with sleeves of 1½" dia. nominal pipe.

Bolts, where shown, shall be ⅝" dia. expansion anchor bolts, 6" long to be drilled and installed when rub rail is attached.

For extruded parapets: During extrusion, open joints at abutments and piers shall be formed by the use of lubricated plates or other means so that uniformity of the opening and chamfers is maintained. Dimension of 1" (as shown in Section thru Joints for Extrusion Only) is additional deck slab that shall be cast at Contractor's expense. Dimension(s) to face of curb shall not be reduced.

Plan dimensions shown are measured in the respective horizontal and vertical planes. The reinforcing steel shown has been detailed based on a standard ¼" per foot cross slope. The Contractor shall adjust the reinforcing steel as required for other cross slopes.

REINFORCING STEEL SCHEDULE

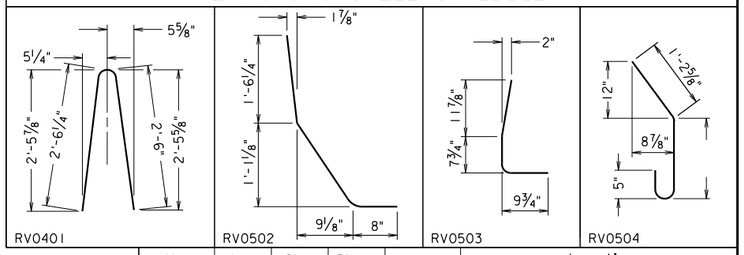

Mark	No.	Size	Pin ø	Length	Location
RT0401	·	#4	—	3'-0"	Slab
RV0401	·	#4	4½"	5'-2"	Parapet and terminal wall
RV0502	·	#5	3¾"	3'-5⅝"	Parapet and terminal wall
RV0503	·	#5	3¾"	2'-4"	Parapet and terminal wall
RV0504	·	#5	3¾"	·	Terminal wall end support
RL04	·	#4	—	·	Parapet and terminal wall
RL0602	·	#6	—	4'-0"	Terminal wall end support
RL0403	·	#4	—	4'-0"	Terminal wall end support

Dimensions in bending diagram are out-to-out of bars, except as shown.

Cost of all bars listed in schedule to be included in price bid for parapet.

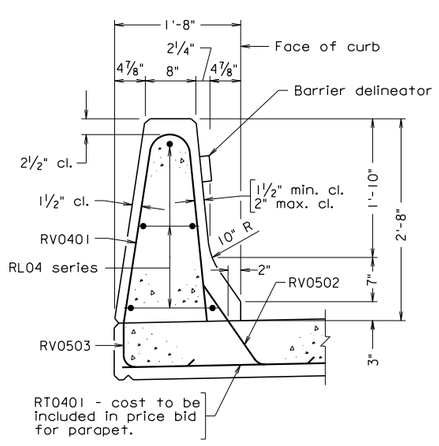

SECTION A-A

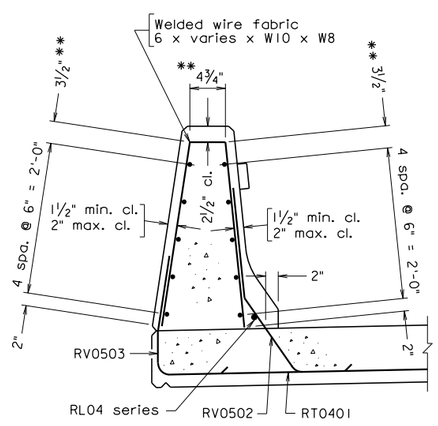

** Dimensions are out-to-out of wires.

SECTION A-A
ALTERNATE REINFORCING STEEL

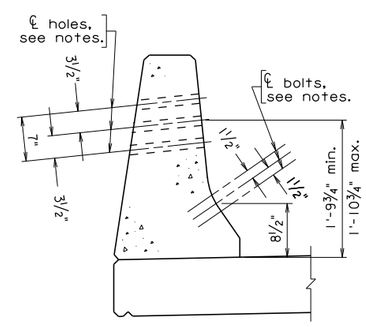

SECTION E-E
Reinforcing steel not shown.

Gross concrete quantities (C.Y.) = Lin. Ft. x 0.105
All concrete above roadway slab

Scale: 1" = 1'-0" unless otherwise shown.

©2012, Commonwealth of Virginia

No.	Description	Date
	Revisions	

COMMONWEALTH OF VIRGINIA
DEPARTMENT OF TRANSPORTATION

STRUCTURE AND BRIDGE DIVISION

CAST-IN-PLACE CONCRETE PARAPET (F-SHAPE)

Designed: S&B DIV
Drawn: S&B DIV
Checked: S&B DIV

Date

Plan No. BPB-3D

Sheet No.

Sealed and Signed by:
Julius F.J. Volgyi Jr.
Lic. No. 010487
On the date of
December 14, 2012

A copy of the original sealed and signed standard drawing is on file in the Central Office.

VDOT S&B DIVISION
RICHMOND, VA
STRUCTURAL ENGINEER

12-14-2012

bpb3d.dgn

BPB-3D

CAST-IN-PLACE CONCRETE PARAPET F-SHAPE

TERMINAL WALL ON SUPERSTRUCTURE WITH DECK SLAB EXTENSION

NOTES TO DESIGNER:

The F-shape parapet has a height of 2'-8" and has been crash tested for TL-4 (TL = test level). It is used as the normal traffic barrier unless an open rail is required.

Terminal wall is detailed on superstructure. Standard is used with deck slab extension.

If an initial bituminous overlay is used on the bridge at the time of construction, vertical dimensions and dimensions for reinforcing steel need to be adjusted. The dimensions shown are established from the top of the roadway surface. Therefore, for example if a 1" overlay at the curb is set, the 3" curb dimension and the overall 2'-8" height of the parapet would need to be adjusted to 4" and 2'-9" respectively (Section A-A). In addition, all height dimensions of bolt locations in relation to top of deck slab need to be adjusted by 1" (Section E-E).

It is the Contractor's responsibility to determine the number of reinforcing bars required as well as any details or dimensions. Therefore, these items are to be left blank in the Reinforcing Steel Schedule.

ADD THE FOLLOWING NOTES, DIMENSIONS, DETAILS, ETC. TO STANDARD:

ELEVATION:

Provide dimension for terminal wall end support.

SECTION A-A:

Modify vertical dimensions (3" curb and 2'-8" parapet height) so that these dimensions will be established from top of overlay surface as noted above.

SECTION D-D:

Provide dimension for terminal wall end support.

SECTION E-E:

Modify vertical dimension 8½" and the range (1'-9¾" min. – 1'-10¾" max.) for bolt locations so that these dimensions will be established from top of overlay surface as noted above.

CAST-IN-PLACE CONCRETE PARAPET F-SHAPE

TERMINAL WALL ON SUPERSTRUCTURE WITH DECK SLAB EXTENSION

ADD THE FOLLOWING NOTES, DIMENSIONS, DETAILS, ETC. TO STANDARD: (cont'd)

REINFORCING STEEL SCHEDULE:

Modify steel rebars if needed due to slab depth, cross slope, or initial overlay if used on bridge.

Complete dimension and length of rebar RV0504.

NOTES:

Complete second note by adding the Class I, II or III of corrosion resistant reinforcing steel required. For additional information on corrosion resistant reinforcing steel (CRR), see Structure and Bridge Division Memorandum (current IIM-S&B-81).

Complete sheet no. for details of deck slab extension or slab span.

STATE	FEDERAL AID ROUTE	FEDERAL AID PROJECT	STATE ROUTE	STATE PROJECT	SHEET NO.
VA.	—				

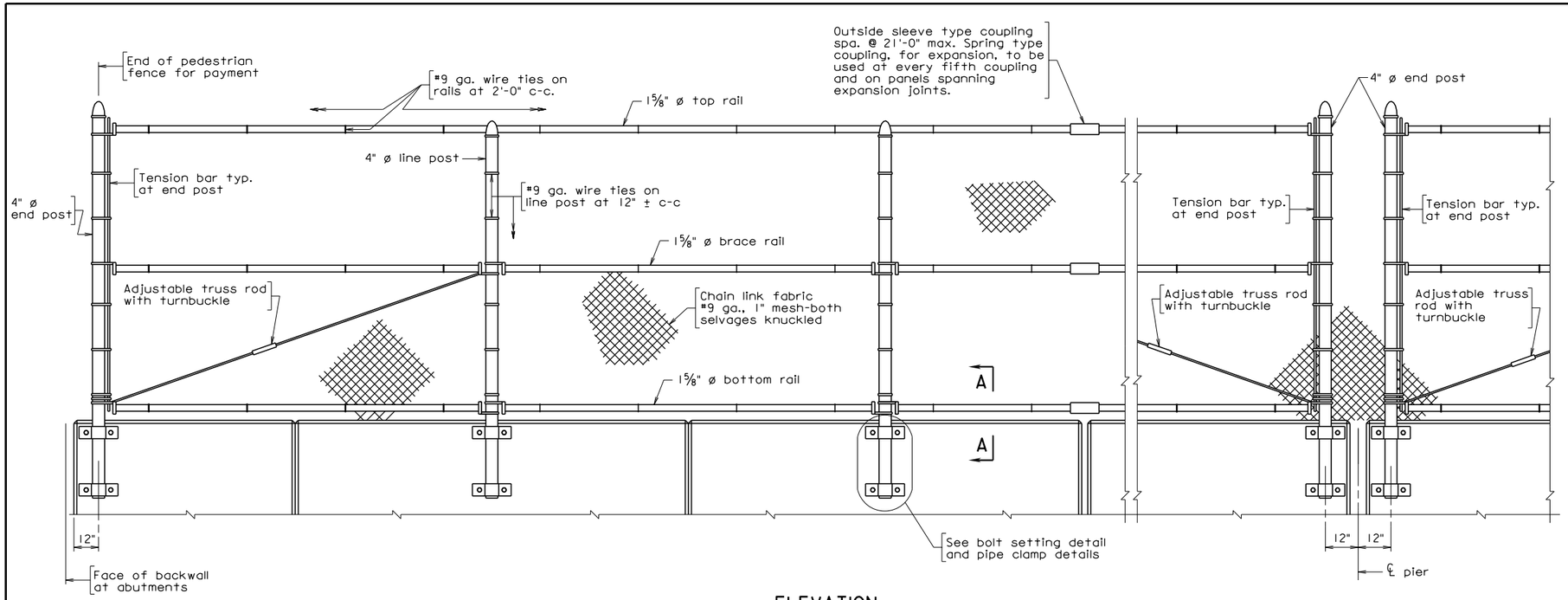

ELEVATION

Type A shown.
Not to scale

Notes:

The fence to be used on this project may be Type A or Type A Alternate as shown in Typical Section.

Posts shall be set vertical. Rails shall be set parallel to the top of parapet.

Line posts shall be located approximately midway between parapet grooves and deflection joints. Maximum spacing shall not exceed 10'-0".

Chain link fabric shall be placed on inside of posts and rails.

Chain link fabric, posts, rails, bolts excluding threads, and other associated hardware shall be ____.

Threaded inserts and bolt threads shall not be galvanized or coated.

Ends of wire ties shall be turned to outside to fence to prevent injury to pedestrians.

Brace rail shall be used for Type A and Type A Alternate fence. Adjustable truss rod with turnbuckle shall be installed between line post and base of end post.

Threaded inserts, when embedded as shown, shall develop full strength of threaded bolts. Embedment of insert per manufacturers recomendations or 5" whichever is greater.

All bolts shall be high strength (ASTM A325)

All welded or seamless steel galvanized pipe shall conform to ASTM F1083, Schedule 40.

Fence framing (posts and railing) shall be grounded.

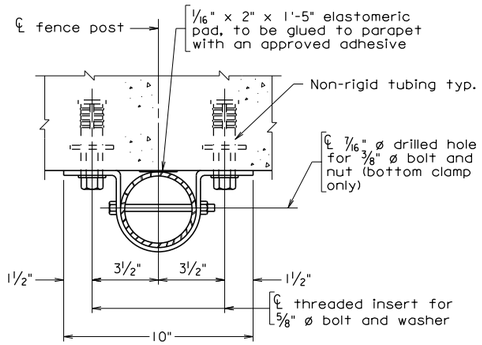

PLAN

Scale: 3" = 1'-0"

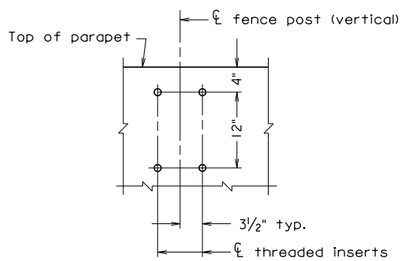

BOLT SETTING DETAIL

Scale: 1" = 1'-0"

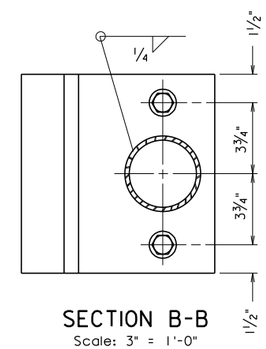

SECTION B-B

Scale: 3" = 1'-0"

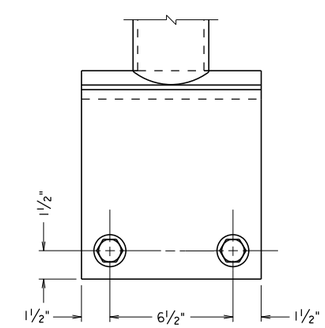

VIEW C-C

Scale: 3" = 1'-0"

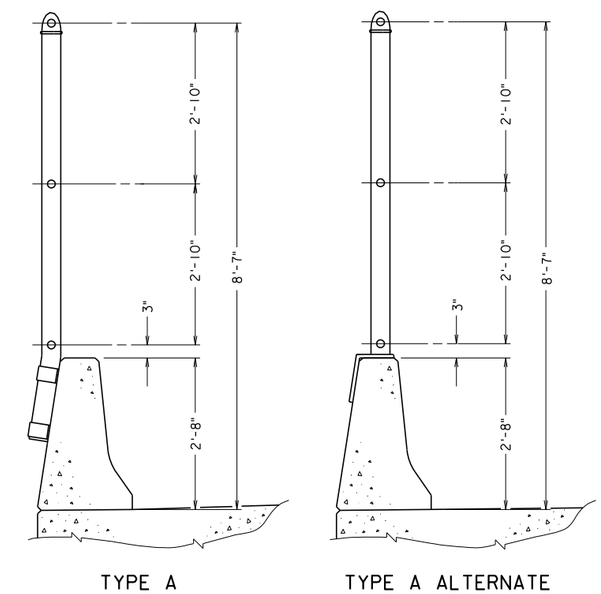

TYPE A

TYPE A ALTERNATE

TYPICAL SECTION

Scale: ¾" = 1'-0"

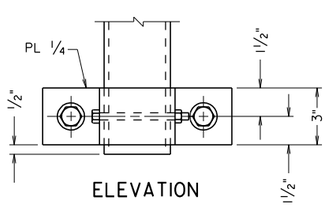

ELEVATION

PIPE CLAMP DETAILS FOR TYPE C

Scale: 3" = 1'-0"

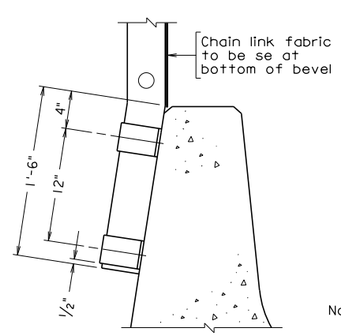

TYPE A

SECTION A-A

Scale: 1½" = 1'-0"

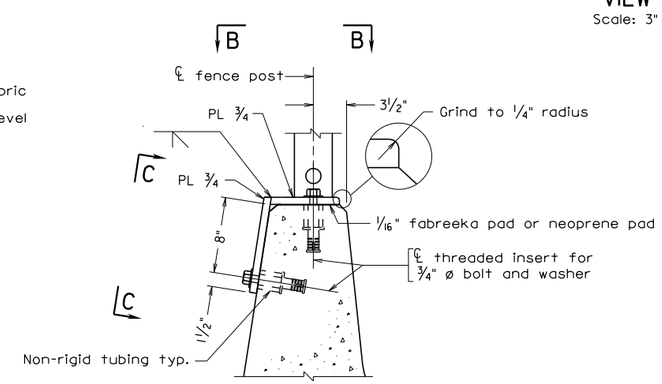

TYPE A ALTERNATE

SECTION A-A

Scale: 1½" = 1'-0"

Scale as noted.

©2012, Commonwealth of Virginia

bpf3.dgn

12-14-2012.

Sealed and Signed by:
Julius F.J. Volgyi Jr.
Lic. No. 010487
On the date of
December 14, 2012

A copy of the original sealed and signed standard drawing is on file in the Central Office.

VDOT S&B DIVISION
RICHMOND, VA
STRUCTURAL ENGINEER

BPF-3

No.	Description	Date
	Revisions	

COMMONWEALTH OF VIRGINIA
DEPARTMENT OF TRANSPORTATION

STRUCTURE AND BRIDGE DIVISION

PEDESTRIAN FENCE DETAILS

Designed: S&B DIV
Drawn: S&B DIV
Checked: S&B DIV

Date

Plan No. BPF-3

Sheet No.

PEDESTRIAN FENCE DETAILS

WITH F-SHAPE PARAPET

NOTES TO DESIGNER:

See Manual of the Structure and Bridge Division, Volume V – Part 2, Chapter 30: Fencing (Pedestrian).

Use this standard when F-shape parapet (Standard BPB-3A or BPB-3B) is used.

The limits of the pedestrian fence are to be designated in the bridge plans, normally front sheet. Limits shall be coordinated with Location and Design Traffic Engineering Design Section.

The District Structure and Bridge Engineer should be consulted before specifying fence material (and color if vinyl coated) to be used.

Design Loads:

Weight of fence: Type A/Type A Alternate: 27 lbs. per lin. ft. of fence

Wind effect (exposed area): Type A/Type A Alternate: 2.0 sq. ft. per lin. ft. of fence

Maximum post spacing: 10'-0".

For projects with initial bituminous overlay, modify details so that 2'-8" and 8'-7" dimensions shown to roadway surface will be established from top of overlay. (Must agree with standard BPB-3A or BPB-3B).

The first note allows the Contractor to furnish either Type A or Type A Alternate. If for any reason, one type is to be specified, the note needs to be revised to read, "The fence on this project shall be Type ___ as shown in Section."

ADD THE FOLLOWING NOTES, DIMENSIONS, DETAILS, ETC. TO STANDARD:

NOTES:

Complete the following notes:

"Chain link fabric, posts, rails and other associated hardware shall be _____". (Note: Designer must specify color and vinyl coated steel or galvanized steel).

STATE	FEDERAL AID ROUTE	FEDERAL AID PROJECT	STATE ROUTE	STATE PROJECT	SHEET NO.
VA.	—				

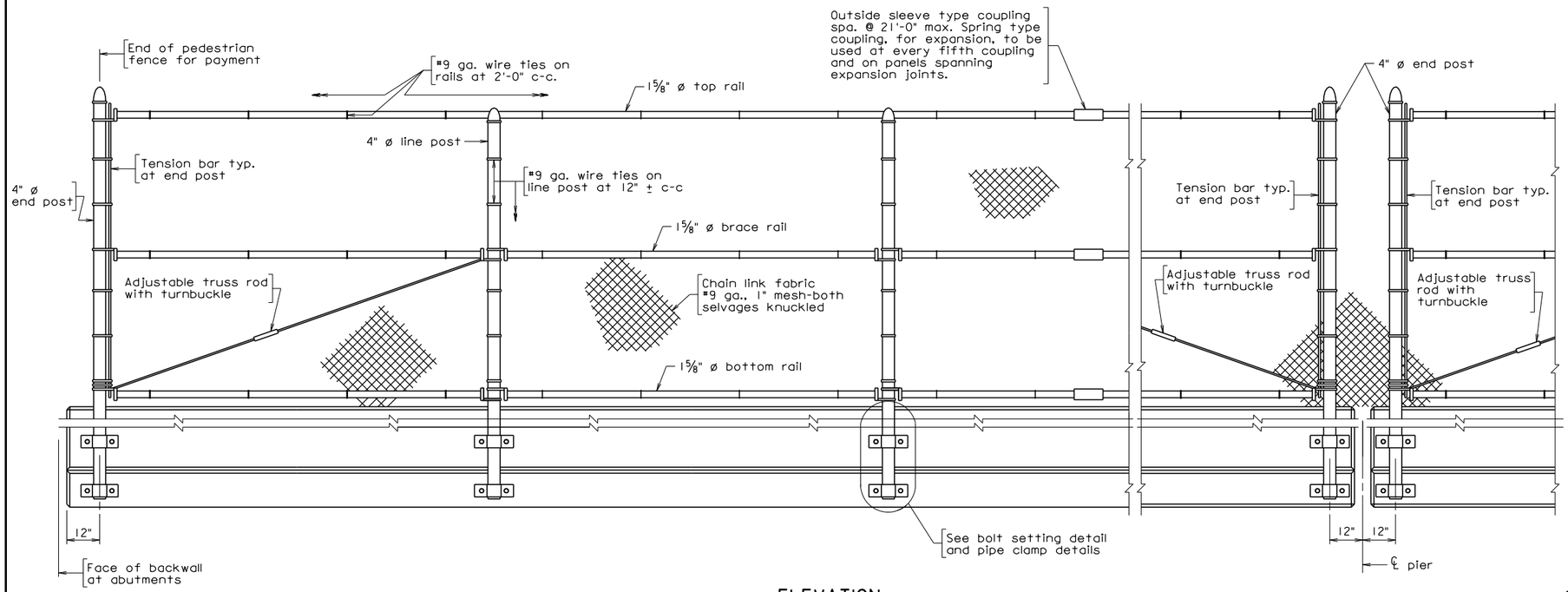

ELEVATION
Not to scale

Notes:

The fence to be used on this project shall be Type __ as shown in Typical Section.

Posts shall be set vertical. Rails shall be set parallel to the top of base of railing.

Spacing of posts to be equally spaced. Maximum spacing of posts shall not exceed 10'-0".

Chain link fabric shall be placed on inside of posts and rails.

Chain link fabric, posts, rails, bolts excluding threads, and other associated hardware shall be ___.

Threaded inserts and bolt threads shall not be galvanized or coated.

Ends of wire ties shall be turned to outside of fence to prevent injury to pedestrians.

Threaded inserts, when embedded as shown, shall develop full strength of threaded bolts. Embedment of insert per manufacturers recomendations or 5" whichever is greater.

All bolts shall be high strength (ASTM A325).

All welded or steamless steel galvanized pipe shall conform to ASTM F1080, Schedule 40.

Fence framing (posts and railing) shall be grounded.

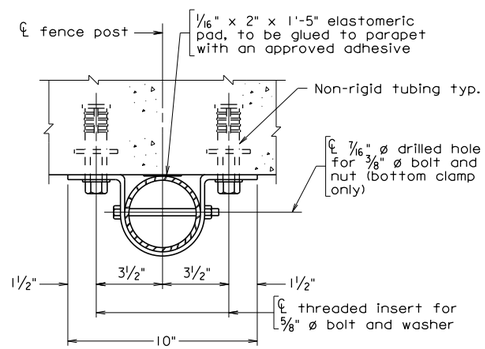

PLAN
Scale: 3" = 1'-0"

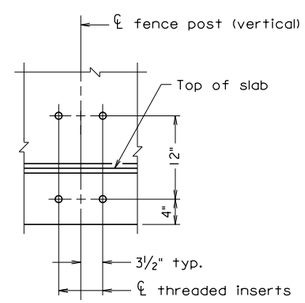

BOLT SETTING DETAIL
Scale: 1" = 1'-0"

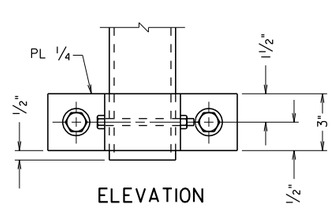

ELEVATION

PIPE CLAMP DETAILS FOR TYPE C
Scale: 3" = 1'-0"

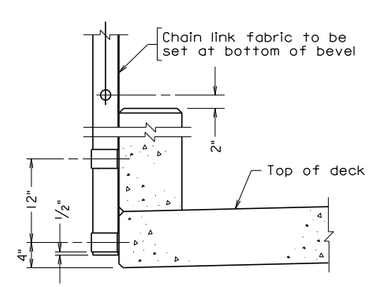

TYPICAL PART SECTION
Scale: 1" = 1'-0"

DIMENSION TABLE			
Railing Type	A	B	C
BR27C - series	2'-2"	3'-1"	2'-2⅜"
BR27D - series	1'-8"	3'-4"	2'-5⅜"

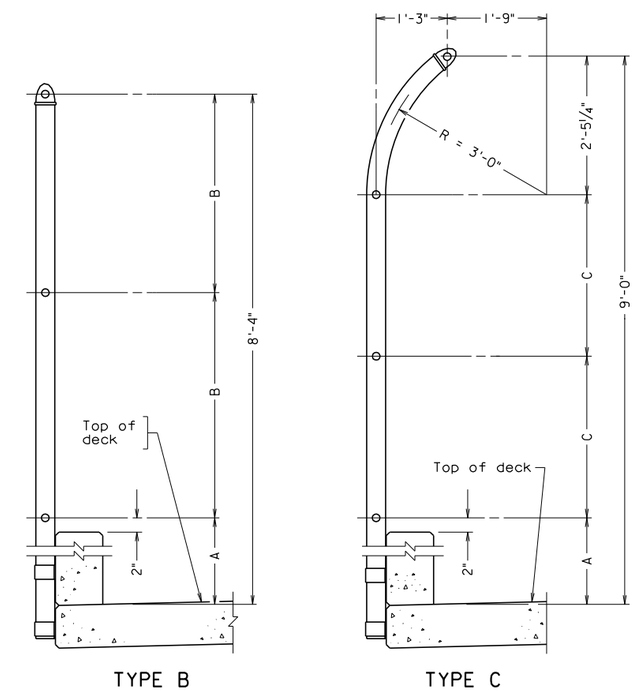

TYPE B

TYPE C

TYPICAL SECTION
Scale: ¾" = 1'-0"

Scale as noted.

© 2012, Commonwealth of Virginia

No.	Description	Date

Revisions

COMMONWEALTH OF VIRGINIA
DEPARTMENT OF TRANSPORTATION

STRUCTURE AND BRIDGE DIVISION

PEDESTRIAN FENCE DETAILS BR27C AND BR27D SERIES RAILING (WITHOUT SIDEWALK)

Designed: S&B DIV
Drawn: S&B DIV
Checked: S&B DIV

Date

Plan No. BPF-4

Sheet No.

bpf4.dgn

12-14-2012

Sealed and Signed by:
Julius F.J. Volgyi Jr.
Lic. No. 010487
On the date of
December 14, 2012

A copy of the original sealed and signed standard drawing is on file in the Central Office.

VDOT S&B DIVISION
RICHMOND, VA
STRUCTURAL ENGINEER

BPF-4

PEDESTRIAN FENCE DETAILS
FOR BR27C-SERIES AND BR27D-SERIES SERIES RAILING
WITHOUT SIDEWALK

NOTES TO DESIGNER:

See Manual of the Structure and Bridge Division, Volume V – Part 2, Chapter 30: Fencing (Pedestrian).

Use this standard when BR27C-series and BR27D-series railing without sidewalk are used on project.

Where protection greater than that afforded by Type B is desired, Type C (curved fencing) may be specified. Type C shall not be used when BR27C-series and BR27D-series railing serves as a traffic barrier.

The limits of the pedestrian fence are to be designated in the bridge plans, normally title sheet.

The District Structure and Bridge Engineer should be consulted before specifying fence material (and color if vinyl coated) to be used.

Design Loads:

Weight of fence: Type B: 29 lbs. per lin. ft. of fence
Type C: 31 lbs. per lin. ft. of fence

Wind effect (exposed area): Type B: 2.6 sq. ft. per lin. ft. of fence
Type C: 3.0 sq. ft. per lin. ft. of fence

For projects with initial bituminous overlay, modify details so that curb dimension shown to roadway surface will be established from top of overlay.

ADD THE FOLLOWING NOTES, DIMENSIONS, DETAILS, ETC. TO STANDARD:

NOTES:

Complete the following notes:

"The fence on this project shall be Type _____ as shown in section." (Specify type B or C).

"Chain link fabric, posts, rails and other associated hardware shall be _____". (Note: Designer must specify color and vinyl coated steel or galvanized steel).

STATE	FEDERAL AID ROUTE	FEDERAL AID PROJECT	STATE ROUTE	STATE PROJECT	SHEET NO.
VA.	—				

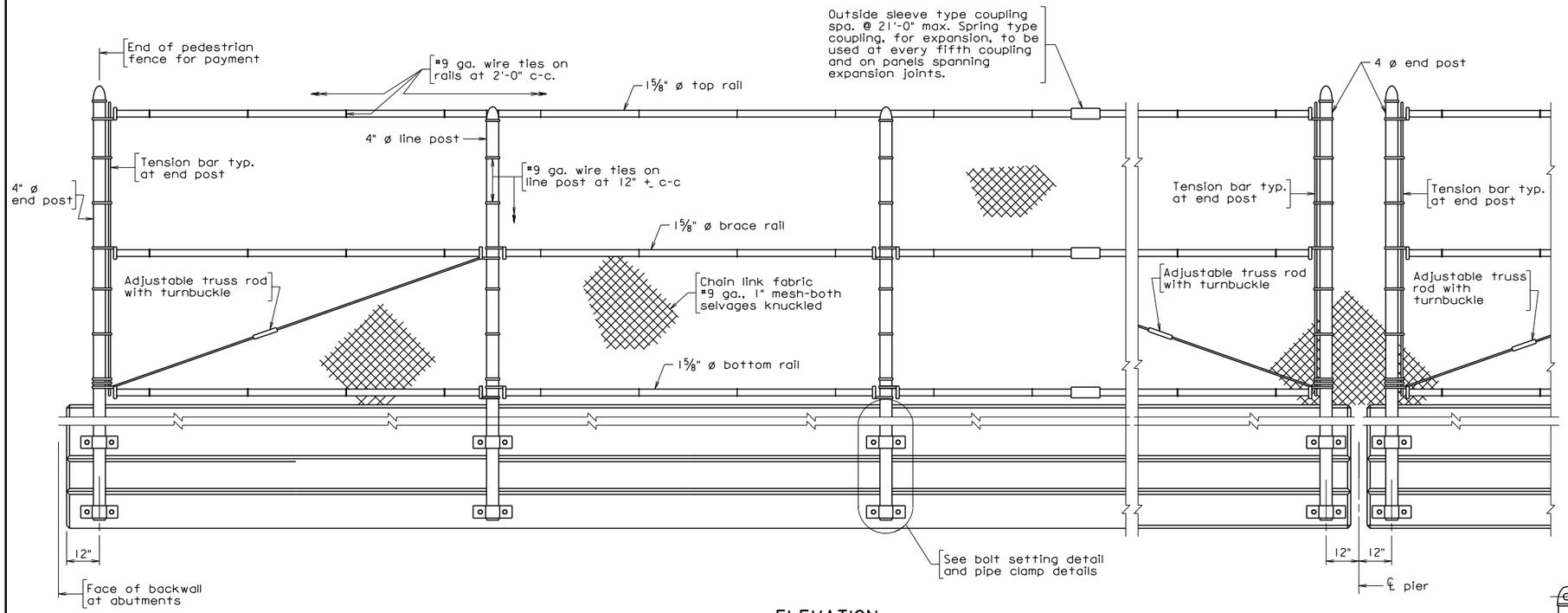

ELEVATION
Not to scale

Notes:

The fence to be used on this project shall be Type __ as shown in Typical Section.

Posts shall be set vertical. Rails shall be set parallel to the top of base of railing.

Spacing of posts to be equally spaced. Maximum spacing of posts shall not exceed 10'-0".

Chain link fabric shall be placed on inside of posts and rails.

Chain link fabric, posts, rails, bolts excluding threads, and other associated hardware shall be ___.

Threaded inserts and bolt threads shall not be galvanized or coated.

Ends of wire ties shall be turned to outside of fence to prevent injury to pedestrians.

Threaded inserts, when embedded as shown, shall develop full strength of threaded bolts. Embedment of insert per manufacturers recomendations or 5" whichever is greater.

All bolts shall be high strength (ASTM A325).

All welded or seamless steel galvanized pipe shall conform to ASTM F1083, Schedule 40.

Fence framing (posts and railing) shall be grounded.

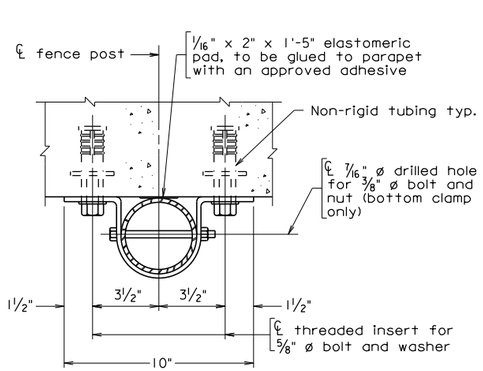

PLAN
Scale: 3" = 1'-0"

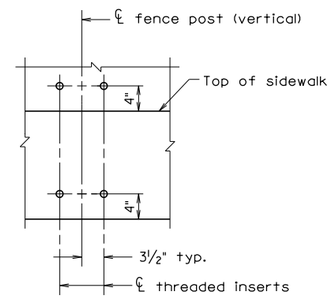

BOLT SETTING DETAIL
Scale: 1" = 1'-0"

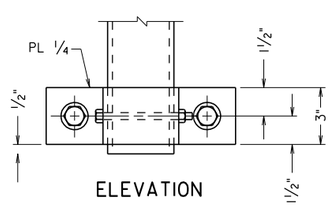

ELEVATION

PIPE CLAMP DETAILS
Scale: 3" = 1'-0"

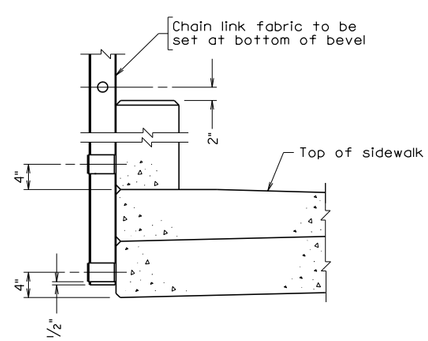

TYPICAL PART SECTION
Scale: 1" = 1'-0"

DIMENSION TABLE			
Railing Type	A	B	C
BR27C - series	2'-2"	3'-1"	2' 2⅜"
BR27D - series	1'-8"	3'-4"	2'-5⅜"

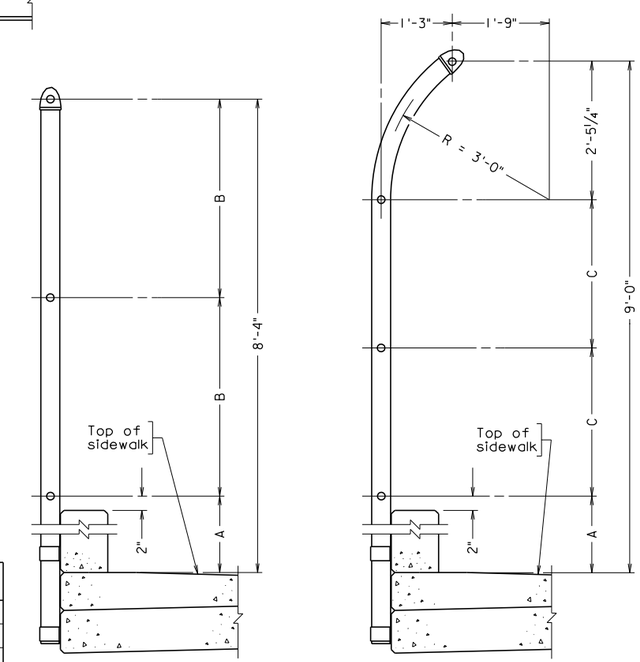

TYPE B

TYPE C

TYPICAL SECTION
Scale: ¾" = 1'-0"

Scale as noted.

© 2012, Commonwealth of Virginia

No.	Description	Date
	Revisions	

COMMONWEALTH OF VIRGINIA
DEPARTMENT OF TRANSPORTATION

STRUCTURE AND BRIDGE DIVISION

PEDESTRIAN FENCE DETAILS BR27C AND BR27D SERIES RAILING (WITH SIDEWALK)

Designed: S&B DIV
Drawn: S&B DIV
Checked: S&B DIV

Date

Plan No. BPF-5

Sheet No.

bpf5.dgn

12-14-2012

BPF-5

Sealed and Signed by:
Julius F.J. Volgyi Jr.
Lic. No. 010487
On the date of
December 14, 2012

A copy of the original sealed and signed standard drawing is on file in the Central Office.

VDOT S&B DIVISION
RICHMOND, VA
STRUCTURAL ENGINEER

PEDESTRIAN FENCE DETAILS
FOR BR27C-SERIES AND BR27D-SERIES RAILING
WITH SIDEWALK

NOTES TO DESIGNER:

See Manual of the Structure and Bridge Division, Volume V – Part 2, Chapter 30: Fencing (Pedestrian).

Use this standard when BR27C-series and BR27D-series railing with sidewalk are used on project.

Where protection greater than that afforded by Type B is desired, Type C (curved fencing) may be specified.

The limits of the pedestrian fence are to be designated in the bridge plans, normally title sheet.

The District Structure and Bridge Engineer should be consulted before specifying fence material (and color if vinyl coated) to be used.

Design Loads:

Weight of fence: Type B: 29 lbs. per lin. ft. of fence
Type C: 31 lbs. per lin. ft. of fence

Wind effect (exposed area): Type B: 2.6 sq. ft. per lin. ft. of fence
Type C: 3.0 sq. ft. per lin. ft. of fence

For projects with initial bituminous overlay, modify details so that curb dimension shown to roadway surface will be established from top of overlay.

ADD THE FOLLOWING NOTES, DIMENSIONS, DETAILS, ETC. TO STANDARD:

NOTES:

Complete the following notes:

"The fence on this project shall be Type _____ as shown in section." (Specify type B or C).

"Chain link fabric, posts, rails and other associated hardware shall be _____". (Note: Designer must specify color and vinyl coated steel or galvanized steel).

STATE	FEDERAL AID ROUTE	FEDERAL AID PROJECT	STATE ROUTE	STATE PROJECT	SHEET NO.
VA.	—				

POINTS	PICK UP POINTS
1	0.292L, 0.708L; L
2	0.207L, 0.586L, 0.207L; L
3	0.145L, 0.355L, 0.355L, 0.145L; L
4	0.107L, 0.262L, 0.262L, 0.262L, 0.107L; L

Unless special lifting devices are attached for pick-up, pick-up points shall be plainly marked on all piles after removal of the forms. The pile shall be supported only at the indicated pick-up points while in storage or while being handled.

The use of proper rigging is required to insure that the pick-up points remain in a straight line during lifting and when positioning the pile for driving.

The use of special embedded or attached lifting devices, the employment of other pick-up points or any other method of pick-up shall be subject to approval by the Engineer.

PILE PICK-UP DATA

Pile size	Approx. Wt. per LF	Maximum lengths for various pick-up systems			
		1-Point	2-Point	3-Point	4-Point
W	Lbs.	L	L	L	L
10"	140	47'	66'	95'	129'
12"	150	51'	73'	104'	141'
14"	204	55'	78'	112'	152'
16"	267	62'	88'	126'	171'
18"	338	64'	90'	129'	175'
20"	417	69'	97'	138'	188'
24"	600	72'	102'	146'	198'

Maximum lengths are determined from impact loads. L is the maximum pick-up length based on a concrete compressive strength of 5000 psi. If piles are picked up when concrete strength is less than 5000 psi, the maximum pick-up length shall be the tabulated length reduced by 1% for every 250 psi below 5000 psi.

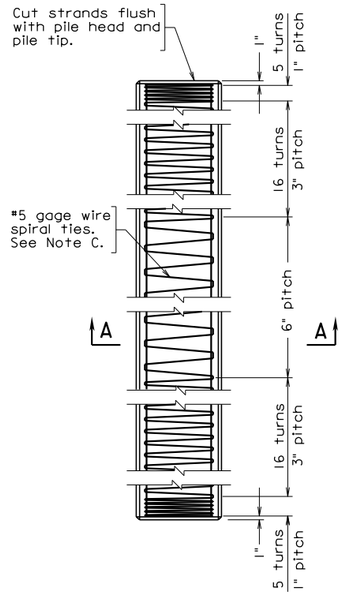

PILE ELEVATION

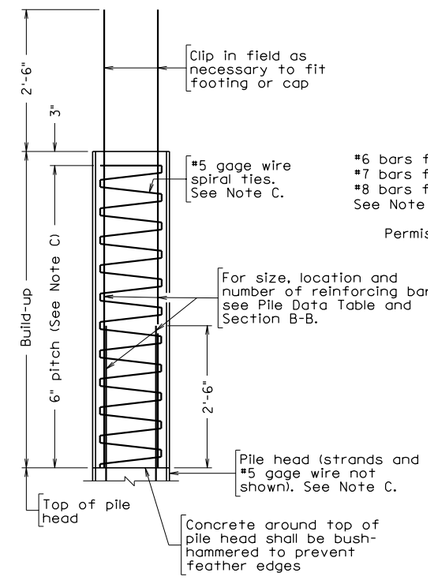

PILE BUILD-UP ELEVATION
See Note B

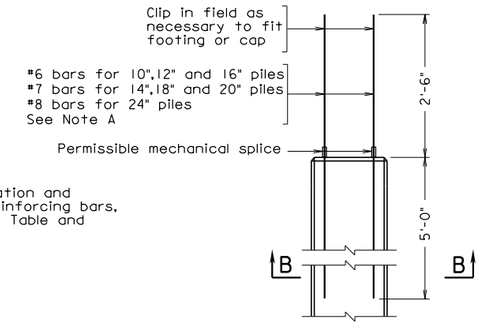

PILE HEAD PROJECTING BAR DETAIL
Strands and #5 gage wire not shown

Note:

All concrete shall be Class A5 having a minimum compressive cylinder strength at 28 days equal to 5000 psi and a minimum compressive cylinder strength at time of release of strands equal to 3500 psi.

All strands shall be low relaxation and shall have an ultimate strength of 270 ksi.

Deformed reinforcing bars shall conform to ASTM A615, Grade 60.

One splice will be permitted where the length of pile required is greater than the maximum for 2-point pick-up unless specifically prohibited.

Build-ups shall be used only with written permission by the Engineer and then only after driving is complete.

Subject to approval by the Engineer, the bars projecting from the pile head may be cut prior to driving and rewelded upon completion of driving. The method of welding used shall develop the tensile strength of the bar.

Mechanical splices for reinforcing bars shall be in accordance with Section 406.03(e) of the Specifications. The Contractor shall provide adequate shielding to protect the ends of the reinforcing bars until the pile is driven and the bars are spliced.

When pile cut-off is greater than 2'-6" at least 30 inches of all the strands shall project into the cap or footing to serve for anchorage.

Where piles are exposed in bridges over tidal water such as in pile bents and in footings constructed above Mean High Tide elevation, the spiral ties and all other reinforcing bars in the pile shall be hot dip galvanized.

Note A:
In lieu of the reinforcing bars projecting from the head:
1. The pile may be cast 2'-6" longer than required. After driving the concrete pile, remove the concrete from the added length to expose the strands. The strands must be thoroughly cleaned before casting the footing or cap; or
2. 1⅜" ø preformed plain holes or 2" ø holes formed with galvanized corrugated metal may be used. After driving the pile and cleaning out the holes, the #6, #7 or #8 reinforcing bars shall be installed and the holes shall be filled with approved non-shrink grout.

Note B:
If alternate circular strand arrangement is used, bar extension must be placed to fit.

Note C:
For Seismic Performance Category B bridges (structures), #4/0 gage wire or #3 bars shall be used and the pitch shall be 3".

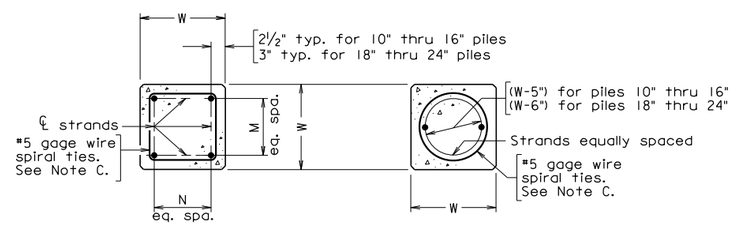

SQUARE CIRCULAR

SECTION A-A: STRAND PATTERN FOR PILE

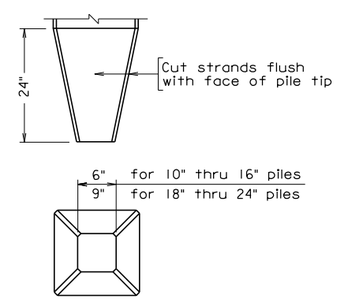

PILE TIP

Pile tip(s) shall be used only when specified. Strands not shown.

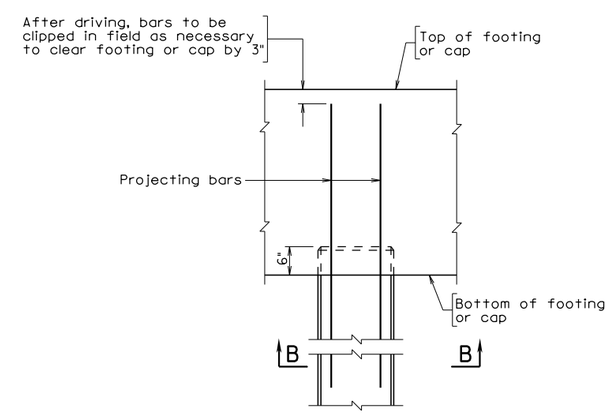

PROJECTING BAR CLIP DETAIL
Strands and #5 gage wire not shown

PILE DATA

Pile size W (in.)	Strand pattern	Total no. of strands in pile	Diameter of strands in.	Strand spacings M	Strand spacings N	Prestressing force per strand pounds	Effective prestress after losses psi
10"	Square	4	½	1	1	28,910	966
	Circular	4	½	—	—	28,910	966
12"	Square	4	½	1	1	30,970	751
	Circular	4	½	—	—	30,970	751
14"	Square	6	½	2	1	30,970	820
	Circular	6	½	—	—	30,970	820
16"	Square	8	½	2	2	30,970	836
	Circular	8	½	—	—	30,970	836
18"	Square	10	½	3	2	30,970	826
	Circular	10	½	—	—	30,970	826
20"	Square	12	½	3	3	30,970	805
	Circular	12	½	—	—	30,970	805
24"	Square	16	½	4	4	30,970	751
	Circular	16	½	—	—	30,970	751

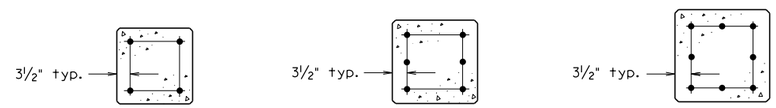

10", 12" and 14" PILES 16" and 18" PILES 20" and 24" PILES

SECTION B-B: PILE HEAD
See Note B

Not to scale

©2012, Commonwealth of Virginia

No.	Description	Date

Revisions

COMMONWEALTH OF VIRGINIA
DEPARTMENT OF TRANSPORTATION

STRUCTURE AND BRIDGE DIVISION

PRESTRESSED CONCRETE PILES
SQUARE: 10" THRU 24"

Designed: S&B DIV
Drawn: S&B DIV
Checked: S&B DIV

Date | Plan No. BPP-1 | Sheet No.

bppi.dgn

08-07-2012.

Sealed and Signed by:
Julius F.J. Volgyi Jr.
Lic. No. 010487
On the date of
Aug. 7, 2012

A copy of the original sealed and signed standard drawing is on file in the Central Office.

VDOT S&B DIVISION
RICHMOND, VA
STRUCTURAL ENGINEER

BPP-1

PRESTRESSED CONCRETE PILES

SQUARE: 10” THRU 24”

NOTES TO DESIGNER:

Section properties for piles:

Pile Size	Area (A) in^2	Moment of Inertia (I) in^4	Section Modulus(S) in^3
10”	100	833	167
12”	144	1728	288
14”	196	3201	457
16”	256	5461	683
18”	324	8748	972
20”	400	13,333	1333
24”	576	27,648	2304

ADD THE FOLLOWING NOTES, DIMENSIONS, DETAILS, ETC. TO STANDARD:

None

STATE	FEDERAL AID ROUTE	FEDERAL AID PROJECT	STATE ROUTE	STATE PROJECT	SHEET NO.
VA.	—				

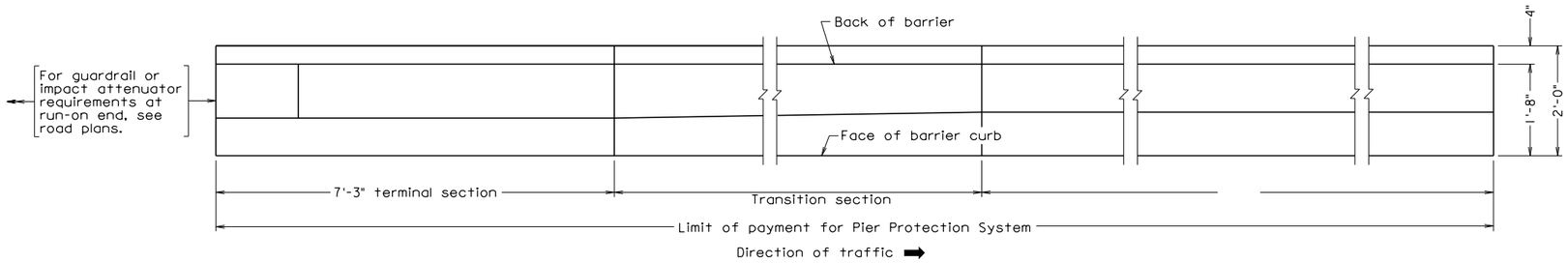

PLAN

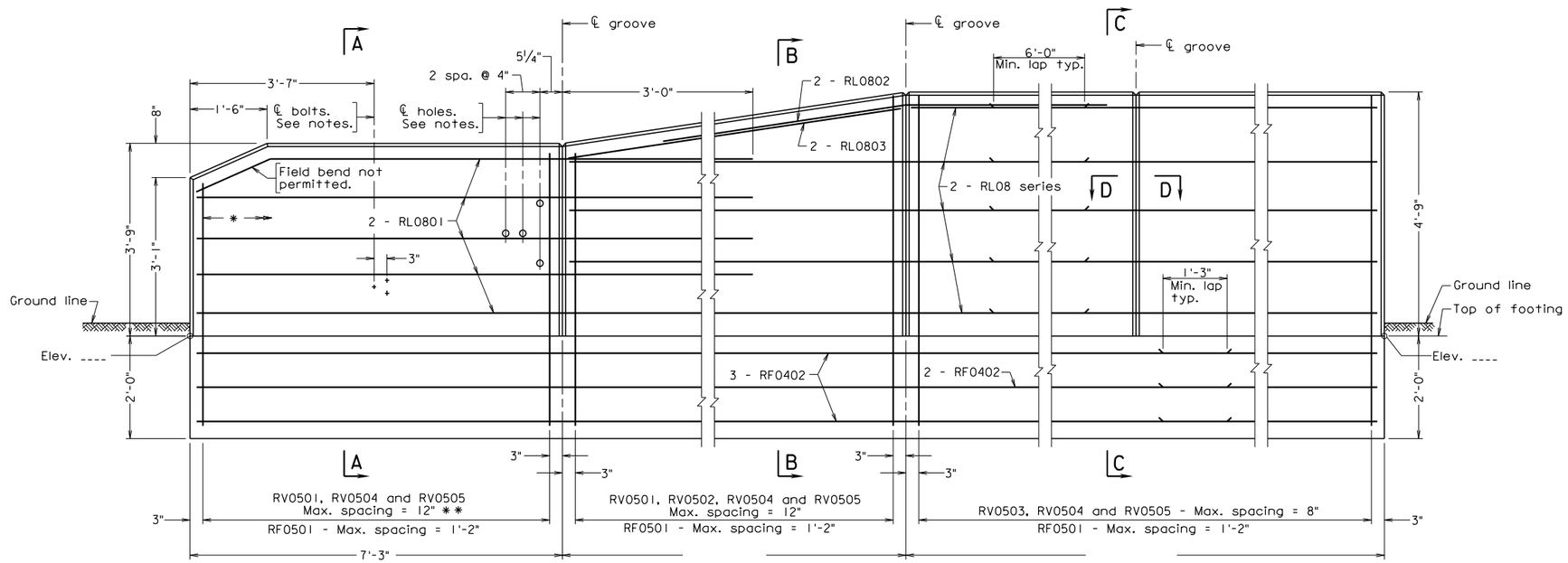

* Adjust length of bars as needed at end.

** Adjust spacing to clear bolts and holes.

ELEVATION

Notes:

Rounded edges with 1" radius may be used in lieu of bevels along top of parapet.

Spacing of grooves to be approximately 8'-0". Spacing of transverse construction joints for crack control to be at approximately 24'-0" to coincide with ℄ of groove. Transverse construction joint through barrier and footing shall be at the same location.

Barrier delineator size, color and spacing to be in accordance with the Specifications. Cost of delineator to be included in price bid for Pier Protection System. Reflective surface of barrier delineator, in all instances, to be facing oncoming traffic.

All reinforcing steel shall be ASTM A615, Grade 60.

All concrete shall be Class A4.

Terminal sections are detailed to take guardrail attachment GR-F0A-2. Holes where shown, shall be formed with sleeves of 1½" diameter nominal pipe. Bolts, where shown, shall be ⅝" diameter expansion bolts, 6" long to be drilled and installed when rub rail is attached.

For reinforcing steel schedule and details not shown, see sheet __.

The Contractor shall determine all dimensions and details necessary for installation.

Payment: Pier Protection System shall be paid for on a lump sum basis, wherein no measurement shall be made, and shall be paid for at the contract lump sum price, which price shall include within the pay limits shown, the parapet, footing, excavation for footing and backfilling as directed by the Engineer and all miscellaneous hardware as detailed on the plans. Such price shall be full compensation for furnishing all materials, labor, tools, equipment and incidentals necessary to complete the work.

bpps1.dgn

12-14-2012

BPPS-1

Sealed and Signed by:
Julius F.J. Volgyl Jr.
Lic. No. 010487
On the date of
December 14, 2012

A copy of the original sealed and signed standard drawing is on file in the Central Office.

VDOT S&B DIVISION
RICHMOND, VA
STRUCTURAL ENGINEER

LAYOUT OF BARRIER FOR PIER PROTECTION

Scale: ---------

Scale: ¾" = 1'-0" unless otherwise shown.

© 2012, Commonwealth of Virginia

No.	Description	Date

Revisions

COMMONWEALTH OF VIRGINIA
DEPARTMENT OF TRANSPORTATION

STRUCTURE AND BRIDGE DIVISION

PIER PROTECTION SYSTEM

Designed: S&B DIV	Date	Plan No.	Sheet No.
Drawn: S&B DIV		BPPS-1	
Checked: S&B DIV			

PIER PROTECTION SYSTEM

NOTES TO DESIGNER:

This standard also requires the inclusion of Standard BPPS-2 in the set of plans.

Standard is to be used for pier protection when the clearance between the pier column(s) or pier stem and the edge of roadway (pavement) is less than 30'-0", the pier is not designed for collision nor exempt and the clearance between the pier column(s) or pier stem and back of the barrier footing is less than 10'-0". Minimum clearance between pier column/stem and the edge of roadway (pavement) is 4'-0" where pier column/stem is directly against the barrier footing.

Designer shall coordinate with roadway designer for barrier termination at the run-on end (guardrail, impact attenuator, etc.). The terminal section is detailed to accommodate guardrail attachment GR-FOA-2.

Reference to barrier height is for portion above ground line. The standard indicates 3" of barrier below ground line to top of 2'-0" x 2'-0" footing.

Barrier height is 54" when clearance is less than 10'-0" and 42" when clearance is less than 30'-0". Barrier is transitioned (42" to 54" height) between 10'-0" and 30'-0" clearances. Minimum transition length shall be 10'-0".

Barrier shall extend a minimum of 5'-0" beyond the face of the pier column/stem.

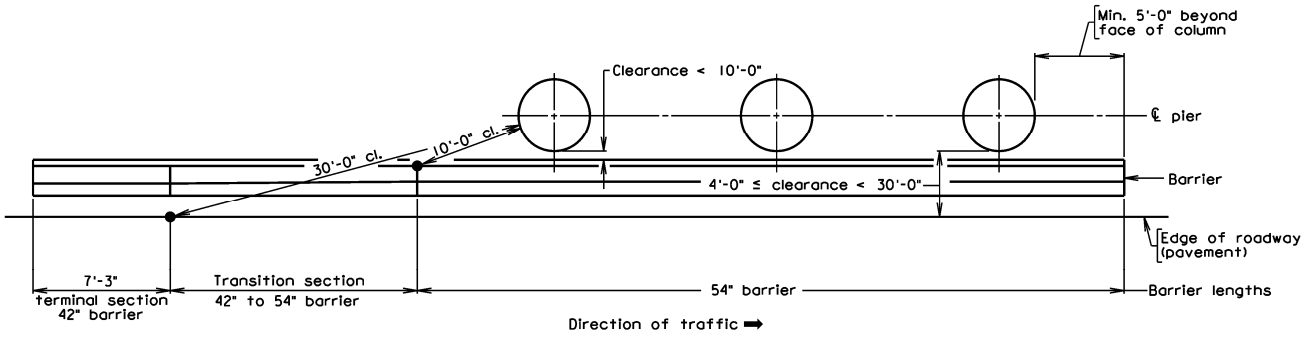

See Manual of the Structure and Bridge Division, Volume V - Part 2, Chapter 15: Pier Details, for additional guidance and examples.

ADD THE FOLLOWING NOTES, DIMENSIONS, DETAILS, ETC. TO STANDARD:

PLAN:

Add required dimensions. If project is "bridge only" add sheet number for details at end of barrier (run-on side).

ADD THE FOLLOWING NOTES, DIMENSIONS, DETAILS, ETC. TO STANDARD (cont'd):

ELEVATION:

Add dimension for length of 42" to 54" barrier transition section and for length of 54" barrier section. Use 6" multiples for barrier length(s). Add elevations.

LAYOUT OF BARRIER FOR PIER PROTECTION:

Show plan view of pier column(s) or pier stem. Show tie point for intersection of ℄ pier and ℄ bridge such that the Contractor can lay out the footing for the Pier Protection System (location, orientation, etc.). The ℄ pier may not be parallel to the roadway. Show distance from face of barrier curb to ℄ pier. Show terminal section (42" high barrier), transition section (42" to 54" high barrier) and 54" high barrier section.

STATE	FEDERAL AID ROUTE	FEDERAL AID PROJECT	STATE ROUTE	STATE PROJECT	SHEET NO.
VA.	—				

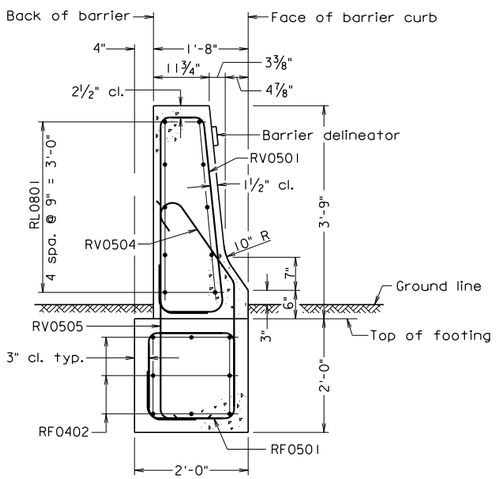

SECTION A-A

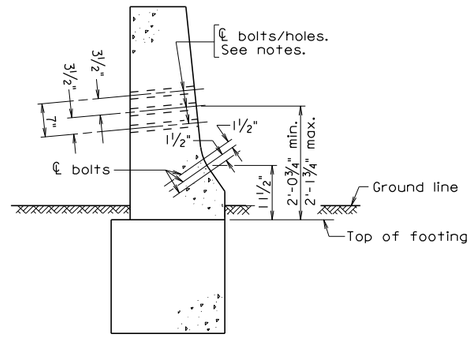

SECTION A-A

Showing location of bolts and holes in Terminal Section.

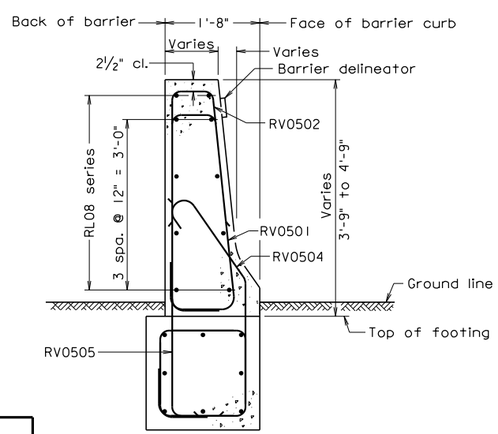

SECTION B-B

For dimensions and details not shown, see Section A-A.

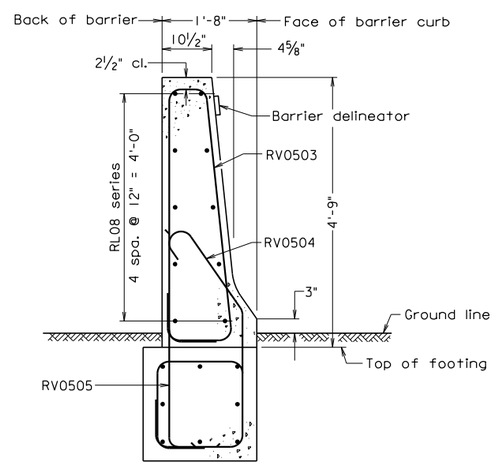

SECTION C-C

For dimensions and details not shown, see Section A-A.

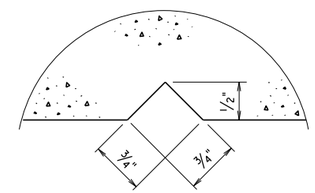

SECTION D-D

Full scale

Groove detail for both sides of barrier

REINFORCING STEEL SCHEDULE

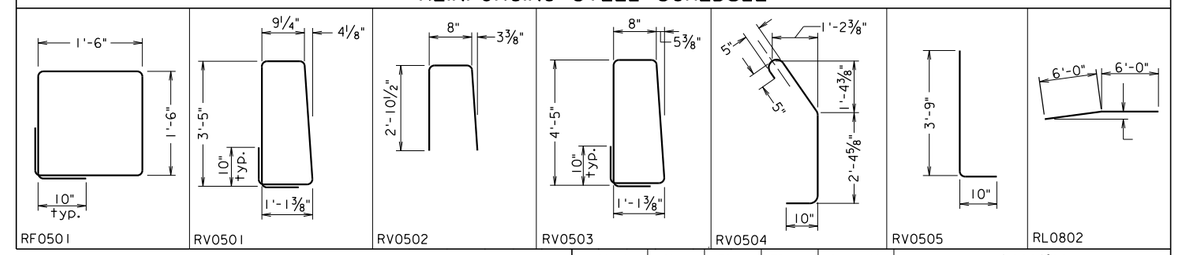

Mark	No.	Size	Pin ø	Length	Location
RV0501	·	#5	3¾"	9'-8¾"	Barrier
RV0502	·	#5	3¾"	6'-2¼"	Barrier
RV0503	·	#5	3¾"	11'-7⅝"	Barrier
RV0504		#5	3¾"	5'-5⅜"	Barrier
RV0505		#5	3¾"	4'-5⅜"	Barrier/footing
RL0801	·	#8	—	·	Barrier
RL0802	·	#8	Var.	12'-0"	Barrier
RL0803	·	#8	—		Barrier
RL08	·	#8	—	·	Barrier
RF0501		#5	3¾"	7'-0¼"	Footing
RF0402		#4	—		Footing

Dimensions in bending diagram are out-to-out of bars, except as shown.

Cost of all bars listed in schedule to be included in price bid for Pier Protection System.

bpps2.dgn

12-14-2012

Sealed and Signed by:
Julius F.J. Volgyi Jr.
Lic. No. 010487
On the date of
December 14, 2012

A copy of the original sealed and signed standard drawing is on file in the Central Office.

VDOT S&B DIVISION
RICHMOND, VA
STRUCTURAL ENGINEER

BPPS-2

Scale: ¾" = 1'-0" unless otherwise shown

© 2012, Commonwealth of Virginia

No.	Description	Date

Revisions

COMMONWEALTH OF VIRGINIA
DEPARTMENT OF TRANSPORTATION

STRUCTURE AND BRIDGE DIVISION

PIER PROTECTION SYSTEM

Designed: S&B DIV
Drawn: S&B DIV
Checked: S&B DIV

Date

Plan No. BPPS-2

Sheet No.

PIER PROTECTION SYSTEM

NOTES TO DESIGNER:

Include this standard in the plans when using standard BPPS-1.

ADD THE FOLLOWING NOTES, DIMENSIONS, DETAILS, ETC. TO STANDARDS:

REINFORCING STEEL SCHEDULE:

Add dimension for bar RL0802 in bar diagram. This dimension is calculated from the slope of the 54" barrier and the 42" to 54" transition barrier section. See ELEVATION view on standard BPPS-1.

STATE	FEDERAL AID ROUTE	FEDERAL AID PROJECT	STATE ROUTE	STATE PROJECT	SHEET NO.
VA.	—				

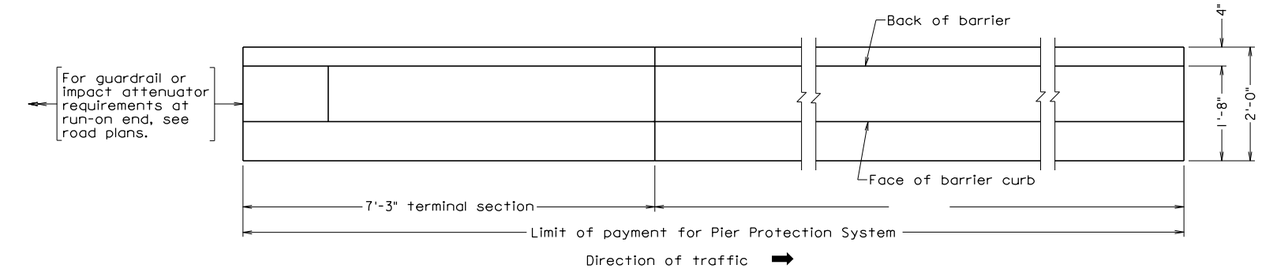

PLAN

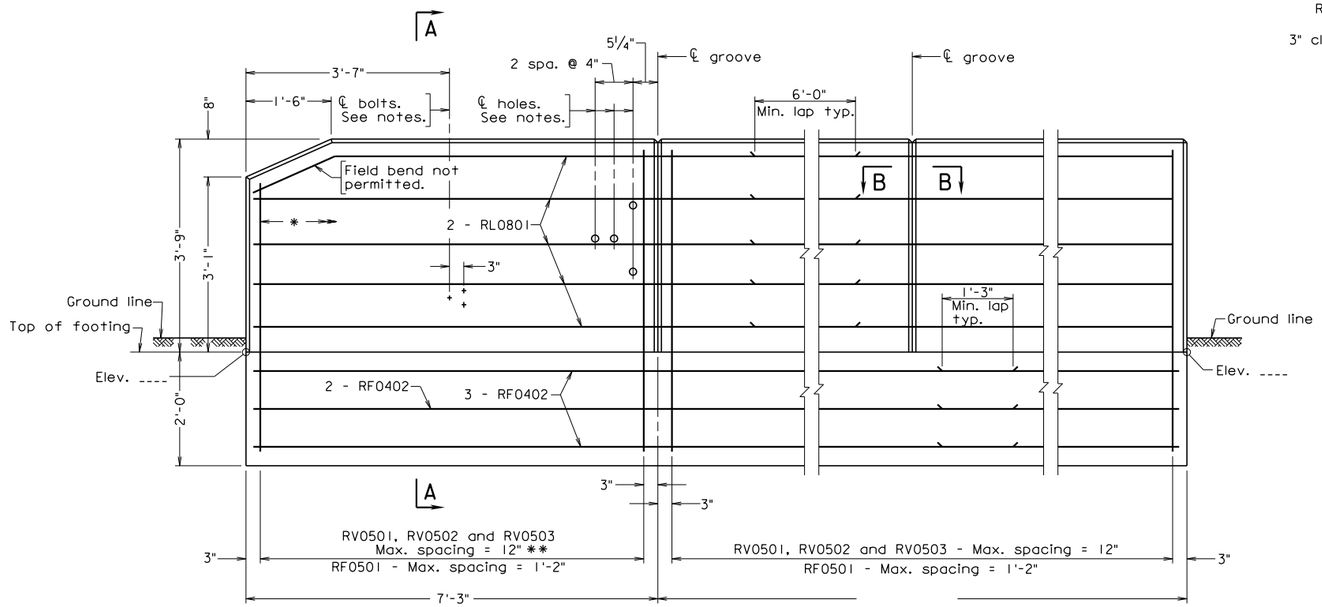

✱ Adjust length of bars as needed at end.

✱✱ Adjust spacing to clear bolts and holes.

ELEVATION

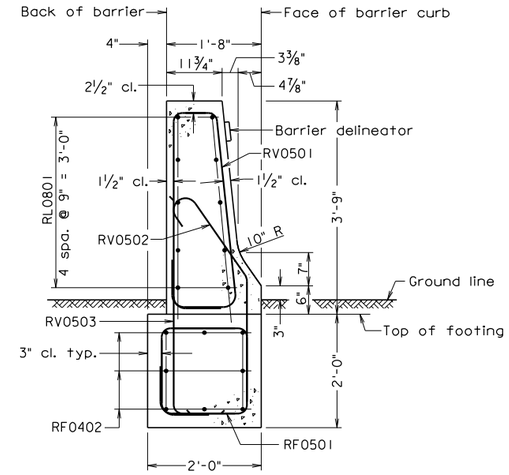

SECTION A-A

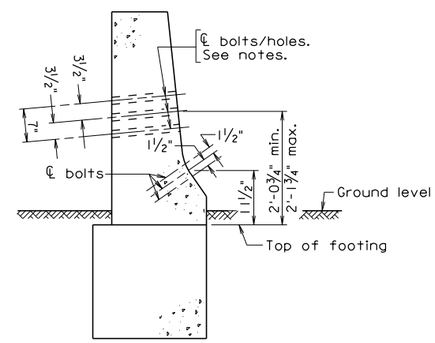

SECTION A-A

Showing location of bolts and holes in Terminal Section.

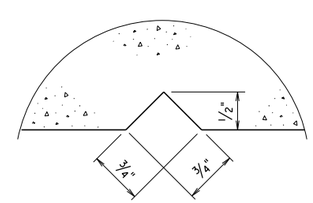

SECTION B-B

Full scale

Groove detail for both sides of barrier

Notes:

Rounded edges with 1" radius may be used in lieu of bevels along top of parapet.

Spacing of grooves to be approximately 8"-0". Spacing of transverse construction joints for crack control to be at approximately 24'-0" to coincide with ℄ of groove. Transverse construction joint through barrier and footing shall be at the same location.

Barrier delineator size, color and spacing to be in accordance with the Specifications. Cost of delineator to be included in price bid for Pier Protection System. Reflective surface of barrier delineator, in all instances, to be facing oncoming traffic.

All reinforcing steel shall be ASTM A615, Grade 60.

All concrete shall be Class A4.

Terminal sections are detailed to take guardrail attachment GR-F0A-2. Holes where shown, shall be formed with sleeves of 1½" diameter nominal pipe. Bolts, where shown, shall be ⅝" diameter expansion bolts, 6" long to be drilled and installed when rub rail is attached.

The Contractor shall determine all dimensions and details necessary for installation.

Payment: Pier Protection System shall be paid for on a lump sum basis, wherein no measurement shall be made, and shall be paid for at the contract lump sum price, which price shall include within the pay limits shown, the parapet, footing, excavation for footing and backfilling as directed by the Engineer and all miscellaneous hardware as detailed on the plans. Such price shall be full compensation for furnishing all materials, labor, tools, equipment and incidentals necessary to complete the work.

REINFORCING STEEL SCHEDULE

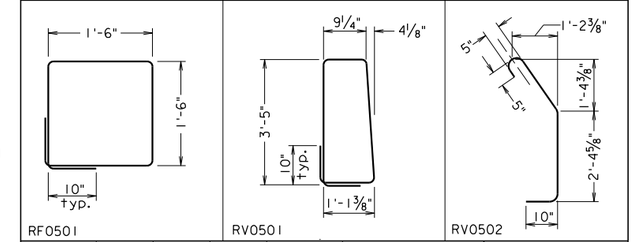

Mark	No.	Size	Pin ø	Length	Location
RV0501	·	#5	3¾"	9'-8¾"	Barrier
RV0502		#5	3¾"	5'-5⅜"	Barrier
RV0503		#5	3¾"	4'-5⅜"	Barrier
RL0801	·	#8	—	·	Barrier
RL08	·	#8	—	·	Barrier
·	·	·		·	·
RF0501	·	#5	3¾"	7'-0¼"	Footing
RF0402	·	#4	—		Footing
RF04	·	#4	—	·	Footing

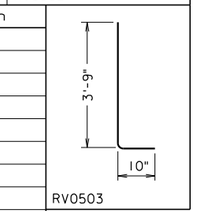

Dimensions in bending diagram are out-to-out of bars, except as shown.

Cost of all bars listed in schedule to be included in price bid for Pier Protection System.

bpps3.dgn

12-14-2012

BPPS-3

Sealed and Signed by:
Julius F.J. Volgyi Jr.
Lic. No. 010487
On the date of December 14, 2012

A copy of the original sealed and signed standard drawing is on file in the Central Office.

VDOT S&B DIVISION
RICHMOND, VA
STRUCTURAL ENGINEER

LAYOUT OF BARRIER FOR PIER PROTECTION

Scale: ----------

Scale: ¾" = 1'-0" unless otherwise shown.

© 2012, Commonwealth of Virginia

No.	Description	Date

Revisions

COMMONWEALTH OF VIRGINIA
DEPARTMENT OF TRANSPORTATION

STRUCTURE AND BRIDGE DIVISION

PIER PROTECTION SYSTEM

Designed: S&B DIV	Date	Plan No.	Sheet No.
Drawn: S&B DIV		BPPS-3	
Checked: S&B DIV			

PIER PROTECTION SYSTEM

NOTES TO DESIGNER:

Standard to be used for pier protection when the clearance between the pier column(s) or pier stem and the edge of roadway (pavement) is less than 30'-0, the pier is not designed for collision nor exempt and the clearance between the pier column(s) or pier stem and back of the barrier footing is greater than or equal to 10'-0".

Designer shall coordinate with roadway designer for barrier termination at the run-on end (guardrail, impact attenuator, etc.). The terminal section is detailed to accommodate guardrail attachment GR-FOA-2.

Reference to barrier height is for portion above ground line. The standard indicates 3" of barrier below ground line to top of 2'-0" x 2'-0" footing.

Barrier shall extend a minimum of 5"-0" beyond the face of the pier column/stem.

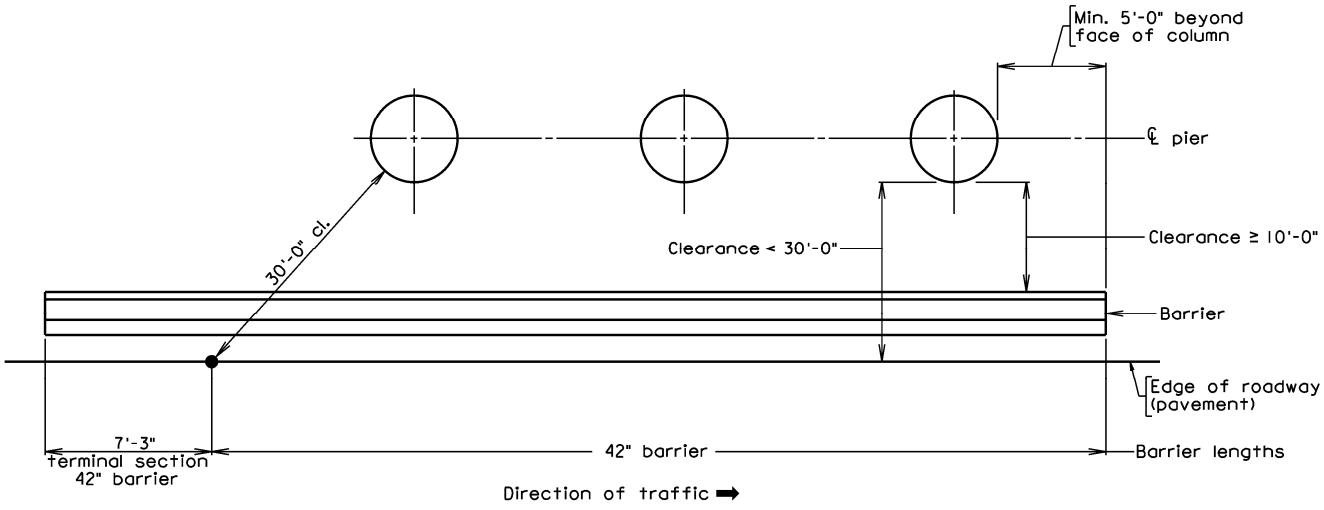

See Manual of the Structure and Bridge Division, Volume V - Part 2, Chapter 15: Pier Details, for additional guidance, detailing requirements and examples.

ADD THE FOLLOWING NOTES, DIMENSIONS, DETAILS, ETC. TO STANDARD:

PLAN:

Add required dimensions, If project is "bridge only" add sheet number for details at end of barrier (run-on side).

ADD THE FOLLOWING NOTES, DIMENSIONS, DETAILS, ETC. TO STANDARD (cont'd):

ELEVATION:

Add dimension for length of barrier. Use 6" multiples for barrier length(s). Add elevations.

LAYOUT OF BARRIER FOR PIER PROTECTION:

Show plan view of pier column(s) or pier stem. Show tie point for intersection of ℄ pier and ℄ bridge such that the Contractor can lay out the footing for the Pier Protection System (location, orientation, etc.). The ℄ pier may not be parallel to the roadway. Show distance from face of barrier curb to ℄ pier. Show terminal section (42" high barrier) and 42" high barrier section.

STATE	FEDERAL AID ROUTE	FEDERAL AID PROJECT	STATE ROUTE	STATE PROJECT	SHEET NO.
VA.	—				

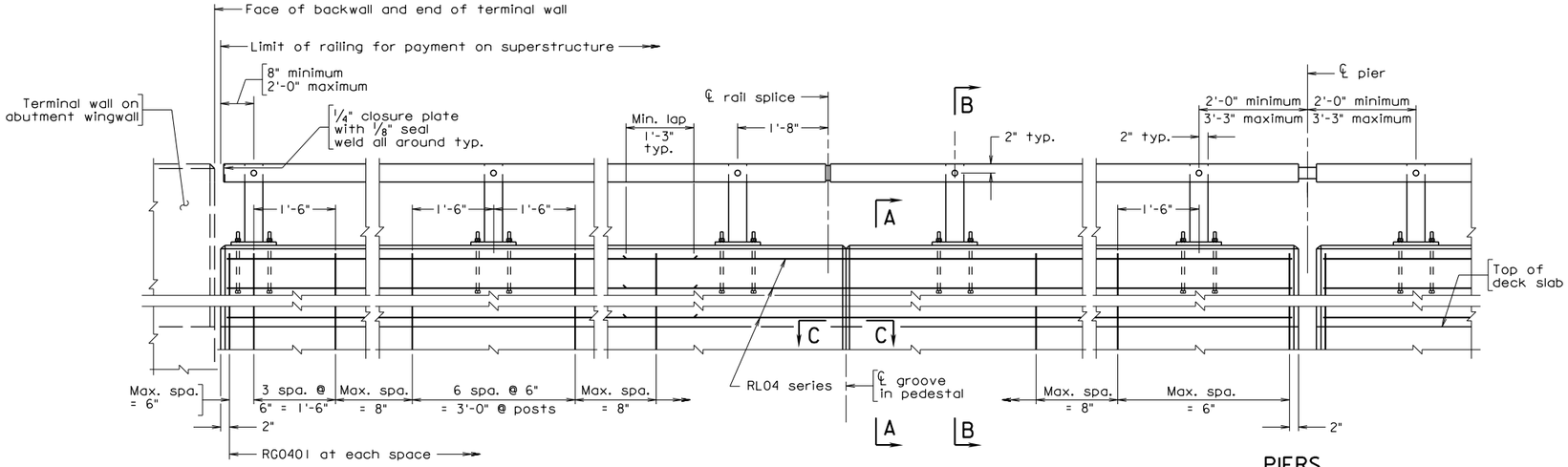

ABUTMENTS

ELEVATION

PIERS
with joint in slab

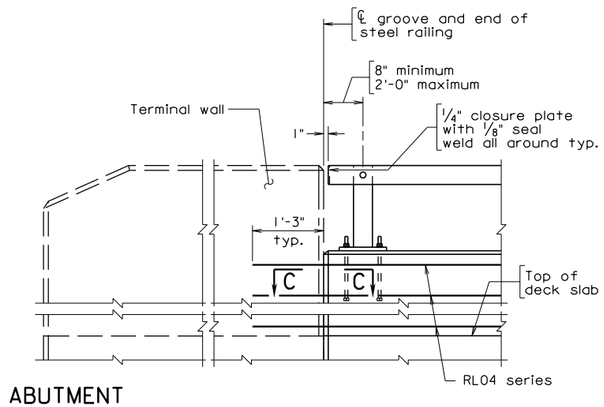

ABUTMENT

PART ELEVATION
Terminal Wall
on Superstructure

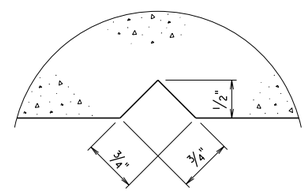

SECTION C-C
Full scale
Groove detail for both sides of rail

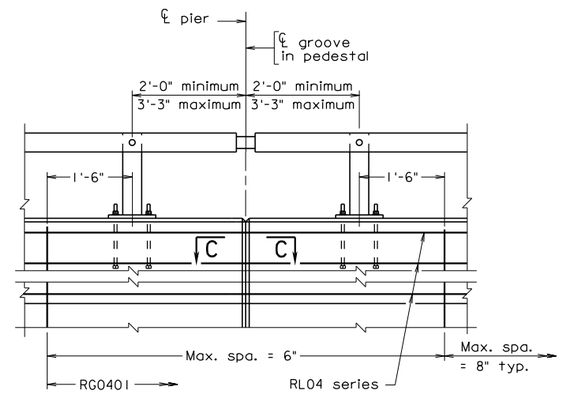

PIERS
Continuous - without joint in slab

Notes:

All reinforcing bars shall be Corrosion Resistant Reinforcing Steel, Class __.

All concrete shall be Class A4.

All bevels for concrete on this sheet shall be 3/4". Rounded edges with 1" radius may be used in lieu of bevels along top or railing.

Plates shall be ASTM A36 steel.

Posts and rail members shall be ASTM A500 Grade B steel. Steel pipe sleeves shall be ASTM A53. Round head bolts shall be ASTM449. All other bolts shall be ASTM A 325. Nuts shall be ASTM A563, Grade DH or ASTM A194, Grade 2H and washers shall be ASTM F436. All steel shall be hot dip galvanized.

Posts shall be seated on neoprene pads 1/8" minimum thickness, having a nominal durometer hardness of 60. Pads shall conform to post base dimensions.

Bolts for attaching rails to posts are 3/4" diameter round head (with slot in head) with hex nut and washer. Holes in post and railing tubing shall be 7/8" diameter. Bolt extensions beyond the nut shall be limited to the smaller of one and a half finishing turns or 1/4 inch. If the extension is longer, the excess will be cut off, the edges of the bolt end ground so that no sharp edges remain and cold galvanizing applied to damaged galvanized areas.

Cut bottom of posts to match cross slope before welding so that posts will be vertical. Steel shims may be used for adjusting post alignment, maximum thickness of shim build-up not to exceed 1/8". Where more tilting of the post is required, the concrete shall be ground down.

Anchor bolts may be set normal to profile grade.

Barrier delineator size, color, and spacing to be in accordance with the Specifications. Cost of delineator to be included in the price bid for railing. Reflective surface of barrier delineator, in all instances, to be facing oncoming traffic.

1/2" diameter drain holes shall be provided in both top and bottom rails approximately half-way between posts except at open joints near pier(s). Drain holes shall be provided at each low end of rail.

Spacing of grooves for U-back wings to be approximately 8'-0". Maximum spacing of grooves in pedestal shall be limited to 3 x post spacing, shall be centered between posts and shall be no closer than 10'-0" to joints.

Plan dimensions shown are measured in the respective horizontal and vertical planes. The reinforcing steel shown has been detailed based on a standard 1/4" per foot cross slope. The Contractor shall adjust the reinforcing steel as required for other cross slopes.

For details and reinforcing steel schedule of terminal wall, see sheet __.

For details of rail connections and additional notes, see sheet__.

REINFORCING STEEL SCHEDULE

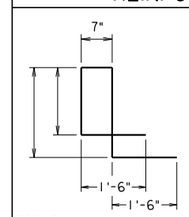

RG0401

Mark	Size	No.	Length	Pin ø	Location
RG0401	#4			3"	Parapet
RL04	#4			—	Parapet

Dimensions in bending diagram are out-to-out of bars.

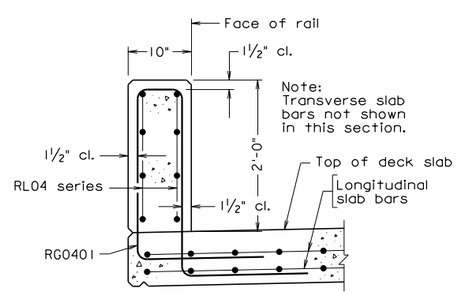

SECTION A-A
Scale: 1" = 1'-0"

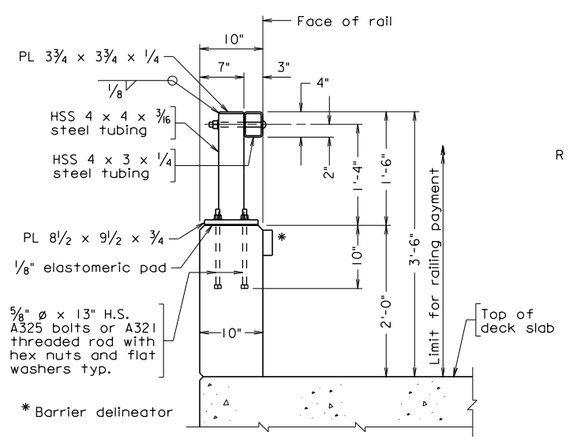

SECTION B-B
Scale: 1" = 1'-0"

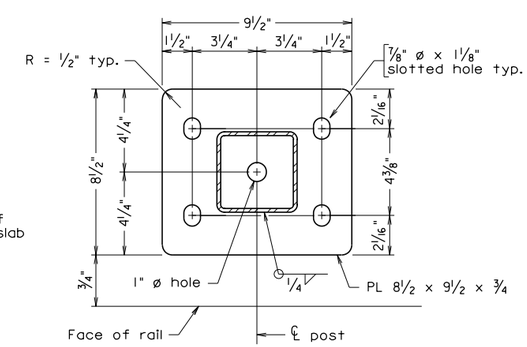

BASE PLATE DETAIL
Not to scale

Scale: 3/4" = 1'-0" unless otherwise noted.

©2012, Commonwealth of Virginia

br27c12.dgn

12-14-2012

Sealed and Signed by:
Julius F.J. Volgyi Jr.
Lic. No. 010487
On the date of
December 14, 2012

A copy of the original sealed and signed standard drawing is on file in the Central Office.

VDOT S&B DIVISION
RICHMOND, VA
STRUCTURAL ENGINEER

BR27C-12

No.	Description	Date

Revisions

COMMONWEALTH OF VIRGINIA
DEPARTMENT OF TRANSPORTATION

STRUCTURE AND BRIDGE DIVISION

42"-BR27C STEEL RAILING

Designed: S&B..DIV
Drawn: .....S&B..DIV
Checked: S&B..DIV

Date | Plan No. BR27C-12 | Sheet No.

42”-BR27_ STEEL RAILING

BR27C-SERIES

NOTES TO DESIGNER:

This railing as detailed is for use as a traffic barrier. The steel railing has a height of 3’-6” and has been crash tested for TL-4 (TL = test level). The standard may be used when an open railing is required. This standard shall not be used for sidewalk applications.

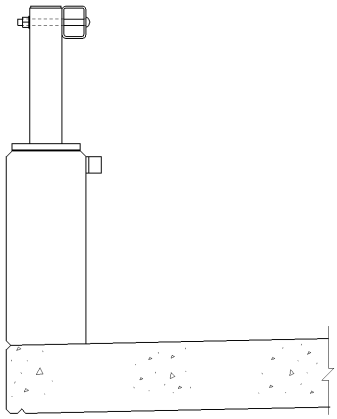

BR27C-12 STEEL RAILING

Bid Item: Do not use the non-standard bid item for this rail. The bid item for this rail shall be RAILING BR27C 1 RAIL. See Office Practice, Vol. V – Part 2, Chapter 3.

The rail connections and fabricator’s notes (BR27C-16) and the appropriate terminal wall standard (BR27T-1 to BR27T-4) are to be included in the plans when using this standard.

If an initial bituminous overlay is used on the bridge at the time of construction, vertical dimensions and dimensions for reinforcing steel need to be adjusted. The dimensions shown are established from the top of roadway surface. Therefore, for example if a 1” overlay at the roadway surface is set, the 2’-0” dimension and overall 3’-6” height of the rail would need to be adjusted to 2’-1” and 3’-7” respectively (Section B-B) and the 2’-0” dimension in Section A-A would have to be adjusted to 2’-1”.

It is the Contractor’s responsibility to determine the number of reinforcing bars required as well as any details or dimensions. Therefore, these items are to be left blank in the Reinforcing Steel Schedule.

42”-BR27_ STEEL RAILING

BR27C-SERIES

ADD THE FOLLOWING NOTES, DIMENSIONS, DETAILS, ETC. TO STANDARD:

SECTION A-A:

Modify vertical dimension (2’-0”) as noted above if an initial overlay is used on bridge.

SECTION B-B:

Modify vertical dimensions (2’-0” and 3’-6” railing height) as noted above if an initial overlay is used on bridge.

NOTES:

Complete first note by adding the Class I, II or III of corrosion resistant reinforcing steel required. For additional information on corrosion resistant reinforcing steel (CRR), see Structure and Bridge Division Memorandum (current IIM-S&B-81).

Complete sheet no. for terminal wall.

Complete sheet no. for rail connections and fabricator’s notes.

REINFORCING STEEL SCHEDULE:

Add dimensions and length for rebar RG0401.

TITLE BLOCK:

Replace standard designation with Plan No.

STATE	FEDERAL AID ROUTE	FEDERAL AID PROJECT	STATE ROUTE	STATE PROJECT	SHEET NO.
VA.	—				

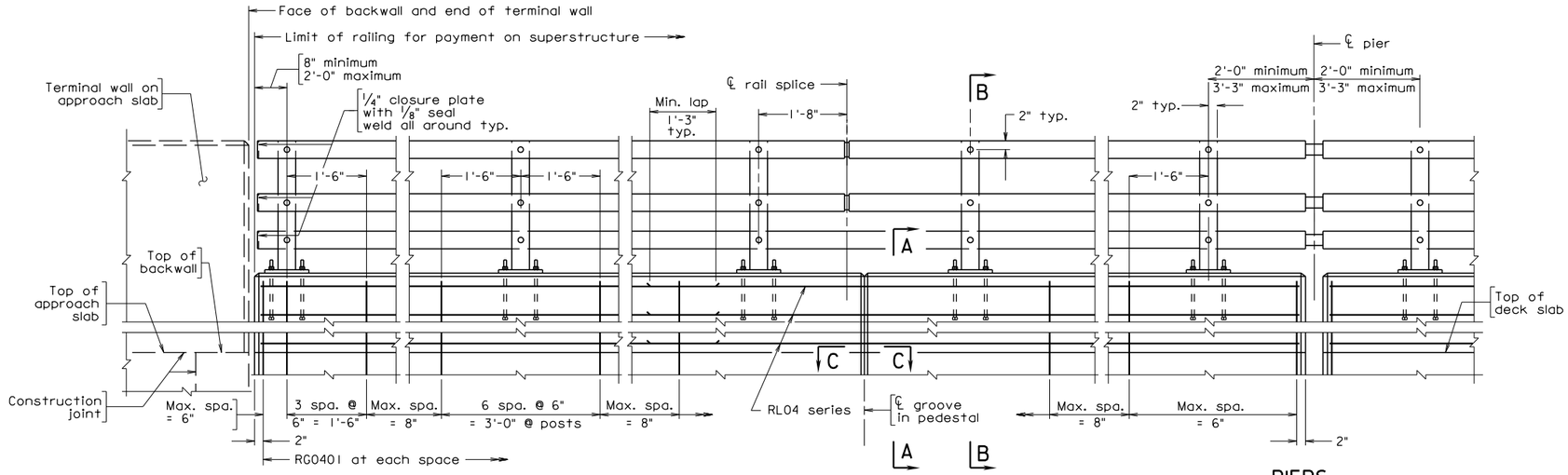

ABUTMENTS

ELEVATION

PIERS
with joint in slab

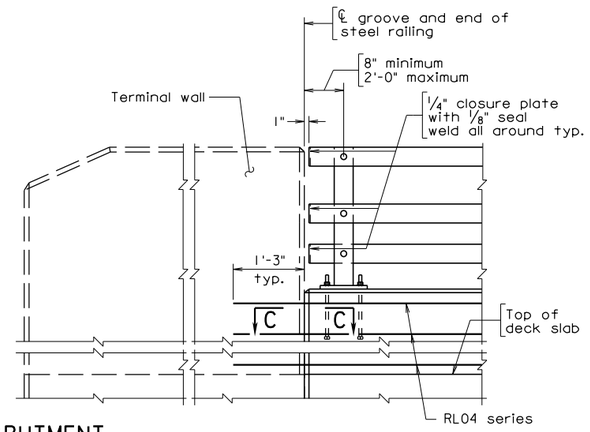

ABUTMENT

PART ELEVATION
Terminal Wall on Superstructure

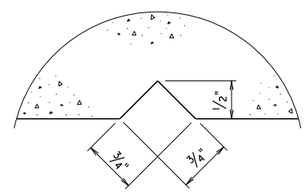

SECTION C-C
Full scale
Groove detail for both sides of rail

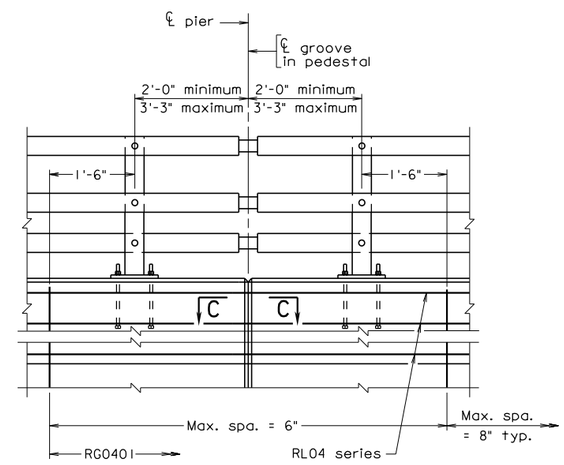

PIERS
Continuous - without joint in slab

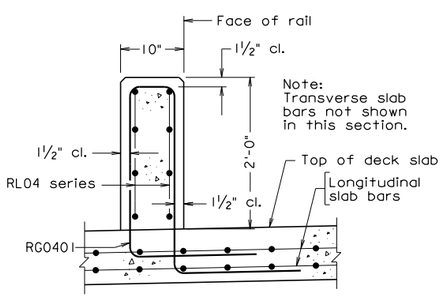

SECTION A-A
Scale: 1" = 1'-0"

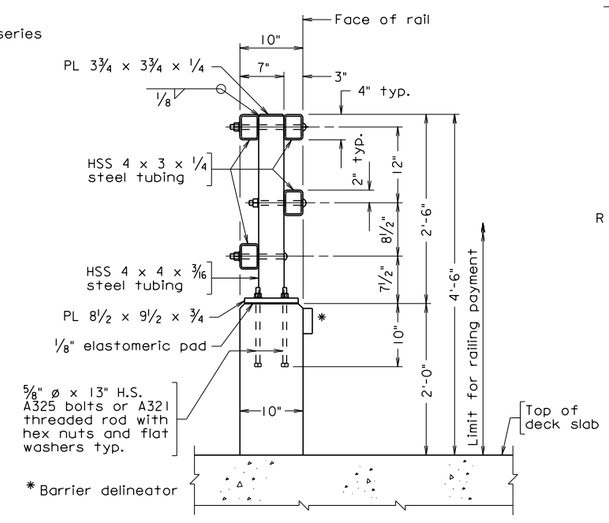

SECTION B-B
Scale: 1" = 1'-0"

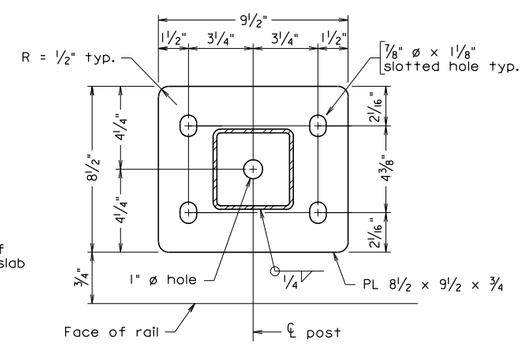

BASE PLATE DETAIL
Not to scale

Notes:

All reinforcing bars shall be Corrosion Resistant Reinforcing Steel, Class __.

All concrete shall be Class A4.

All bevels for concrete on this sheet shall be 3/4". Rounded edges with 1" radius may be used in lieu of bevels along top or railing.

Plates shall be ASTM A36 steel.

Posts and rail members shall be ASTM A500 Grade B steel. Steel pipe sleeves shall be ASTM A53. Round head bolts shall be ASTM449. All other bolts shall be ASTM A 325. Nuts shall be ASTM A563, Grade DH or ASTM A194, Grade 2H and washers shall be ASTM F436. All steel shall be hot dip galvanized.

Posts shall be seated on neoprene pads 1/8" minimum thickness, having a nominal durometer hardness of 60. Pads shall conform to post base dimensions.

Bolts for attaching rails to posts are 3/4" diameter round head (with slot in head) with hex nut and washer. Holes in post and railing tubing shall be 7/8" diameter. Bolt extensions beyond the nut shall be limited to the smaller of one and a half finishing turns or 1/4 inch. If the extension is longer, the excess will be cut off, the edges of the bolt end ground so that no sharp edges remain and cold galvanizing applied to damaged galvanized areas.

Cut bottom of posts to match cross slope before welding so that posts will be vertical. Steel shims may be used for adjusting post alignment, maximum thickness of shim build-up not to exceed 1/8". Where more tilting of the post is required, the concrete shall be ground down.

Anchor bolts may be set normal to profile grade.

Barrier delineator size, color, and spacing to be in accordance with the Specifications. Cost of delineator to be included in the price bid for railing. Reflective surface of barrier delineator, in all instances, to be facing oncoming traffic.

1/2" diameter drain holes shall be provided in both top and bottom rails approximately half-way between posts except at open joints near pier(s). Drain holes shall be provided at each low end of rail.

Spacing of grooves for U-back wings to be approximately 8'-0". Maximum spacing of grooves in pedestal shall be limited to 3 x post spacing, shall be centered between posts and shall be no closer than 10'-0" to joints.

Plan dimensions shown are measured in the respective horizontal and vertical planes. The reinforcing steel shown has been detailed based on a standard 1/4" per foot cross slope. The Contractor shall adjust the reinforcing steel as required for other cross slopes.

For details and reinforcing steel schedule of terminal wall, see sheet __.

For details of rail connections and additional notes, see sheet__.

REINFORCING STEEL SCHEDULE

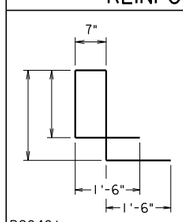

RG0401

Mark	Size	No.	Length	Pin ø	Location
RG0401	#4			3"	Parapet
RL04	#4			—	Parapet

Dimensions in bending diagram are out-to-out of bars.

Scale: 3/4" = 1'-0" unless otherwise noted.

©2012, Commonwealth of Virginia

No.	Description	Date

Revisions

COMMONWEALTH OF VIRGINIA
DEPARTMENT OF TRANSPORTATION

STRUCTURE AND BRIDGE DIVISION

54"-BR27C STEEL RAILING

Designed: S&B..DIV
Drawn: ....S&B..DIV
Checked: S&B..DIV

Date | Plan No. BR27C-13 | Sheet No.

br27c13.dgn

12-14-2012

Sealed and Signed by:
Julius F.J. Volgyi Jr.
Lic. No. 010487
On the date of December 14, 2012

A copy of the original sealed and signed standard drawing is on file in the Central Office.

VDOT S&B DIVISION
RICHMOND, VA
STRUCTURAL ENGINEER

BR27C-13

54”-BR27_ STEEL RAILING

BR27C-SERIES

NOTES TO DESIGNER:

This railing is detailed for use as a traffic barrier to separate pedestrian/bicycle shared use path (SUP) from traffic. The steel railing has a height of 4’-6” and has been crash tested for TL-4 (TL = test level). The crash tested rail has been modified to meet the rail opening requirements of the AASHTO *Standard Specifications for Highway Bridges* as well as the AASHTO *LRFD Bridge Design Specifications.* A design exception has been approved by the FHWA. The standard may be used when an open railing is required.

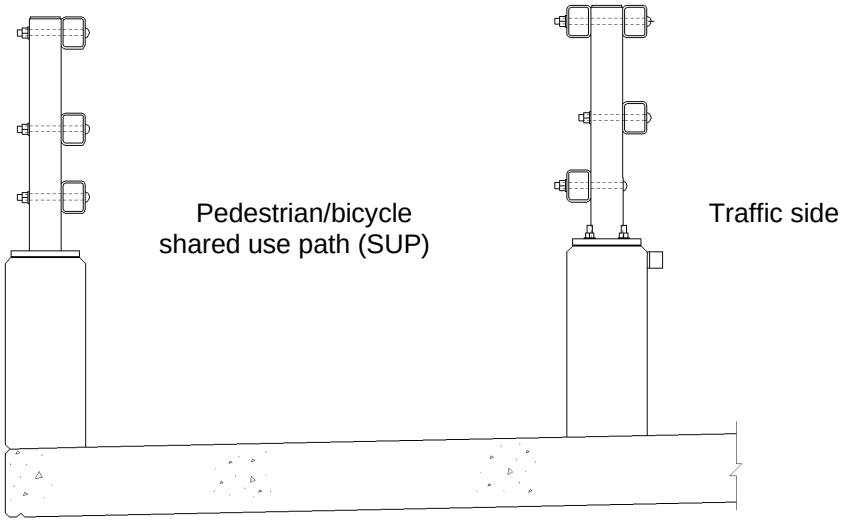

On Outside of Structure
(Standard BR27C-14)

On Inside of Structure

BR27C-13 STEEL RAILING

SUP: For geometrics of shared used path, see Office Practice, Vol. V – Part 2, Chapter 6, sheets 4-10 to 4-16.

Bid Item: Do not use the non-standard bid item for this rail. The bid item for this rail shall be RAILING BR27C 4 RAILS. See Office Practice, Vol. V – Part 2, Chapter 3.

The rail connections and fabricator’s notes (BR27C-16) and the appropriate terminal wall standard (BR27T-7 to BR27T-9) are to be included in the plans when using this standard.

If an initial bituminous overlay is used on the bridge at the time of construction, vertical dimensions and dimensions for reinforcing steel need to be adjusted. The dimensions shown are established from the top of the roadway surface. Therefore, for example if a 1” overlay at the roadway surface is set, the 2’-0” dimension and overall 4’-6” height of the rail would need to be adjusted to 2’-1” and 4’-7” respectively (Section B-B) and the 2’-0” dimension in Section A-A would have to be adjusted to 2’-1”.

54”-BR27_STEEL RAILING

BR27C-SERIES

NOTES TO DESIGNER: (cont’d)

It is the Contractor’s responsibility to determine the number of reinforcing bars required as well as any details or dimensions. Therefore, these items are to be left blank in the Reinforcing Steel Schedule.

ADD THE FOLLOWING NOTES, DIMENSIONS, DETAILS, ETC. TO STANDARD:

SECTION A-A:

Modify vertical dimension (2’-0”) as noted above if an initial overlay is used on bridge.

SECTION B-B:

Modify vertical dimensions (2’-0” and 4’-6” railing height) as noted above if an initial overlay is used on bridge.

NOTES:

Complete first note by adding the Class I, II or III of corrosion resistant reinforcing steel required. For additional information on corrosion resistant reinforcing steel (CRR), see Structure and Bridge Division Memorandum (current IIM-S&B-81).

Complete sheet no. for terminal wall.

Complete sheet no. for rail connections and fabricator’s notes.

REINFORCING STEEL SCHEDULE;

Add dimensions and length for rebar RG0401.

TITLE BLOCK:

Replace standard designation with Plan No.

STATE	FEDERAL AID ROUTE	FEDERAL AID PROJECT	STATE ROUTE	STATE PROJECT	SHEET NO.
VA.	—				

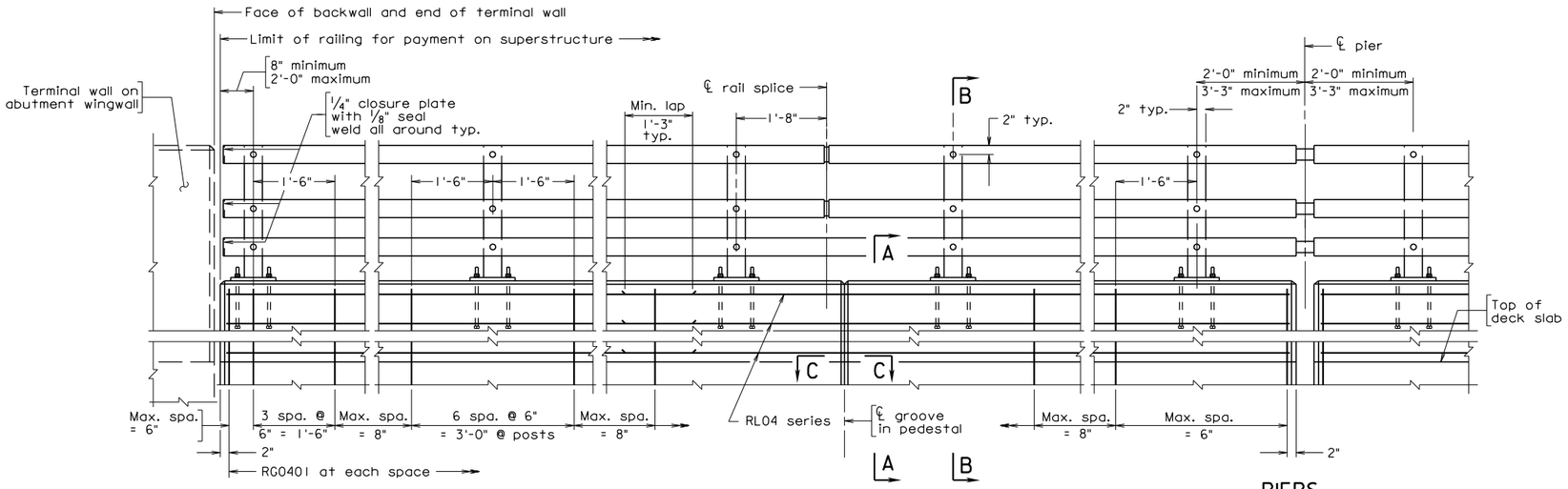

ABUTMENTS

ELEVATION

PIERS
with joint in slab

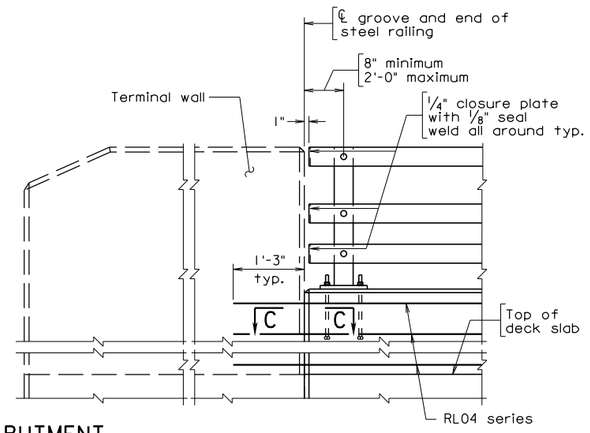

ABUTMENT

PART ELEVATION
Terminal Wall on Superstructure

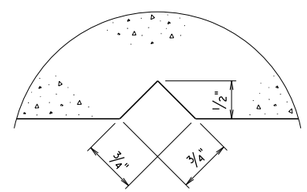

SECTION C-C
Full scale
Groove detail for both sides of rail

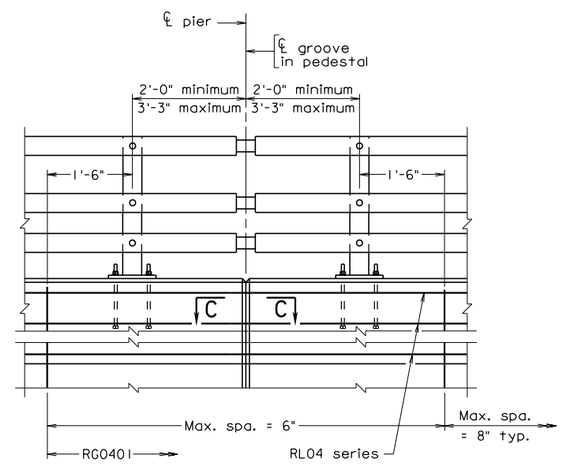

PIERS
Continuous - without joint in slab

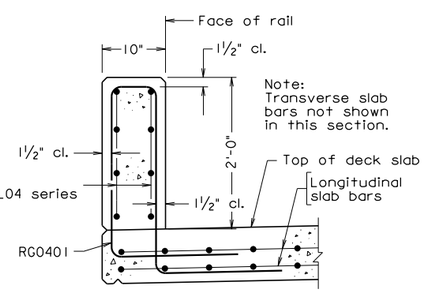

SECTION A-A
Scale: 1" = 1'-0"

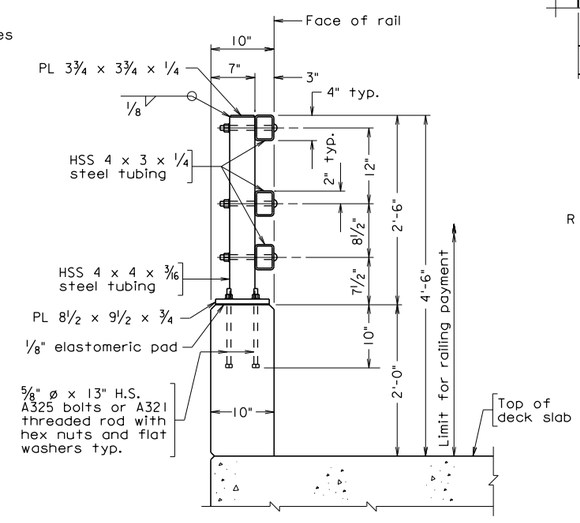

SECTION B-B
Scale: 1" = 1'-0"

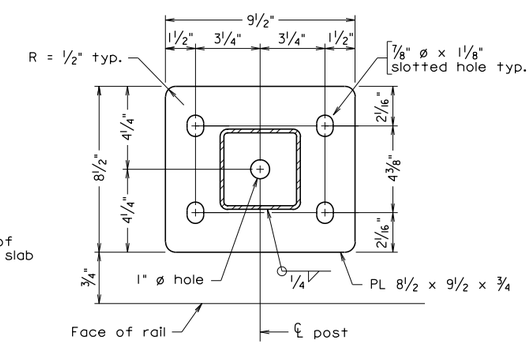

BASE PLATE DETAIL
Scale: 1" = 1'-0"

Notes:

All reinforcing bars shall be Corrosion Resistant Reinforcing Steel, Class __.

All concrete shall be Class A4.

All bevels for concrete on this sheet shall be 3/4". Rounded edges with 1" radius may be used in lieu of bevels along top or railing.

Plates shall be ASTM A36 steel.

Posts and rail members shall be ASTM A500 Grade B steel. Steel pipe sleeves shall be ASTM A53. Round head bolts shall be ASTM449. All other bolts shall be ASTM A 325. Nuts shall be ASTM A563, Grade DH or ASTM A194, Grade 2H and washers shall be ASTM F436. All steel shall be hot dip galvanized.

Posts shall be seated on neoprene pads 1/8" minimum thickness, having a nominal durometer hardness of 60. Pads shall conform to post base dimensions.

Bolts for attaching rails to posts are 3/4" diameter round head (with slot in head) with hex nut and washer. Holes in post and railing tubing shall be 7/8" diameter. Bolt extensions beyond the nut shall be limited to the smaller of one and a half finishing turns or 1/4 inch. If the extension is longer, the excess will be cut off, the edges of the bolt end ground so that no sharp edges remain and cold galvanizing applied to damaged galvanized areas.

Cut bottom of posts to match cross slope before welding so that posts will be vertical. Steel shims may be used for adjusting post alignment, maximum thickness of shim build-up not to exceed 1/8". Where more tilting of the post is required, the concrete shall be ground down.

Anchor bolts may be set normal to profile grade.

Barrier delineator size, color, and spacing to be in accordance with the Specifications. Cost of delineator to be included in the price bid for railing. Reflective surface of barrier delineator, in all instances, to be facing oncoming traffic.

1/2" diameter drain holes shall be provided in both top and bottom rails approximately half-way between posts except at open joints near pier(s). Drain holes shall be provided at each low end of rail.

Spacing of grooves for U-back wings to be approximately 8'-0". Maximum spacing of grooves in pedestal shall be limited to 3 x post spacing, shall be centered between posts and shall be no closer than 10'-0" to joints.

Plan dimensions shown are measured in the respective horizontal and vertical planes. The reinforcing steel shown has been detailed based on a standard 1/4" per foot cross slope. The Contractor shall adjust the reinforcing steel as required for other cross slopes.

For details and reinforcing steel schedule of terminal wall, see sheet __.

For details of rail connections and additional notes, see sheet__.

REINFORCING STEEL SCHEDULE

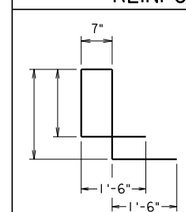

RG0401

Mark	Size	No.	Length	Pin ø	Location
RG0401	#4			3"	Parapet
RL04	#4			—	Parapet

Dimensions in bending diagram are out-to-out of bars.

Scale: 3/4" = 1'-0" unless otherwise noted.

©2012, Commonwealth of Virginia

No.	Description	Date

Revisions

COMMONWEALTH OF VIRGINIA
DEPARTMENT OF TRANSPORTATION

STRUCTURE AND BRIDGE DIVISION

54"-BR27C STEEL RAILING

Designed: S&B..DIV
Drawn: ....S&B..DIV
Checked: S&B..DIV

Date | Plan No. BR27C-14 | Sheet No.

Sealed and Signed by:
Julius F.J. Volgyi Jr.
Lic. No. 010487
On the date of
December 14, 2012

A copy of the original sealed and signed standard drawing is on file in the Central Office.

VDOT S&B DIVISION
RICHMOND, VA
STRUCTURAL ENGINEER

br27c14.dgn

12-14-2012

BR27C-14

54”-BR27_ STEEL RAILING

BR27C-SERIES

NOTES TO DESIGNER:

This railing is detailed for pedestrian/bicycle shared use path (SUP) and used on the outside of a structure provided that there is a traffic barrier separating the pedestrian/bicycle access from traffic (ie., standard BR27C-13). For railing mounted on a sidewalk utilizing pedestrian/bicycle access without a traffic barrier, see Standard BR27C-15. The steel railing has a height of 4’-6” and has been crash tested for TL-4 (TL = test level). The crash tested rail has been modified to meet the rail opening requirements of the AASHTO *Standard Specifications for Highway Bridges* as well as the AASHTO *LRFD Bridge Design Specifications.* A design exception has been approved by the FHWA. The standard may be used when an open railing is required.

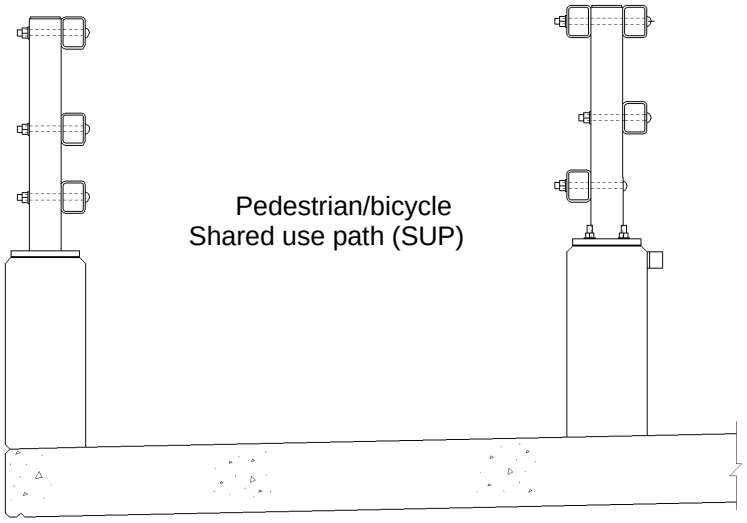

On Outside of Structure

On Inside of Structure
(Standard BR27C-13)

BR27C-14 STEEL RAILING

SUP: For geometrics of shared used path, see Office Practice, Vol V – Part 2, Chapter 6, sheets 4-10 to 4-16.

Bid Item: Do not use the non-standard bid item for this rail. The bid item for this rail shall be RAILING BR27C 3 RAILS. See Office Practice, Vol. V – Part 2, Chapter 3.

The rail connections and fabricator’s notes (BR27C-16) is to be included in the plans when using this standard. The appropriate terminal wall standard (BR27T-5 to BR27T-8) is added if the terminal wall is to be on the superstructure. The guard rail transitioning from the roadway will not be attached to the terminal wall on the outside of structure, but on the inside of structure. Therefore, the terminal wall standard selected would have to be modified by removing details and notes that pertain to guard rail attachment.

NOTES TO DESIGNER: (cont’d)

If an initial bituminous overlay is used on the bridge at the time of construction, vertical dimensions and dimensions for reinforcing steel need to be adjusted. The dimensions shown are established from the top of the roadway surface. Therefore, for example if 1” overlay at the roadway surface is set, the 2’-0” dimension and overall 4’-6” height of the rail would need to be adjusted to 2’-1” and 4’-7” respectively (Section B-B) and the 2’-0” dimension in Section A-A would have to be adjusted to 2’-1”.

It is the Contractor’s responsibility to determine the number of reinforcing bars required as well as any details or dimensions. Therefore, these items are to be left blank in the Reinforcing Steel Schedule.

ADD THE FOLLOWING NOTES, DIMENSIONS, DETAILS, ETC. TO STANDARD:

SECTION A-A:

Modify vertical dimension (2’-0”) as noted above if an initial overlay is used on bridge.

SECTION B-B:

Modify vertical dimensions (2’-0” and 4’-6” railing height) as noted above if an initial overlay is used on bridge.

NOTES:

Complete first note by adding the Class I, II or III of corrosion resistant reinforcing steel required. For additional information on corrosion resistant reinforcing steel (CRR), see Structure and Bridge Division Memorandum (current IIM-S&B-81).

Complete sheet no. for terminal wall if added in the plans.

Complete sheet no. for rail connections and fabricator’s notes.

REINFORCING STEEL SCHEDULE:

Add dimensions and length for rebar RG0401.

TITLE BLOCK:

Replace standard designation with Plan No.

STATE	FEDERAL AID ROUTE	FEDERAL AID PROJECT	STATE ROUTE	STATE PROJECT	SHEET NO.
VA.	—				

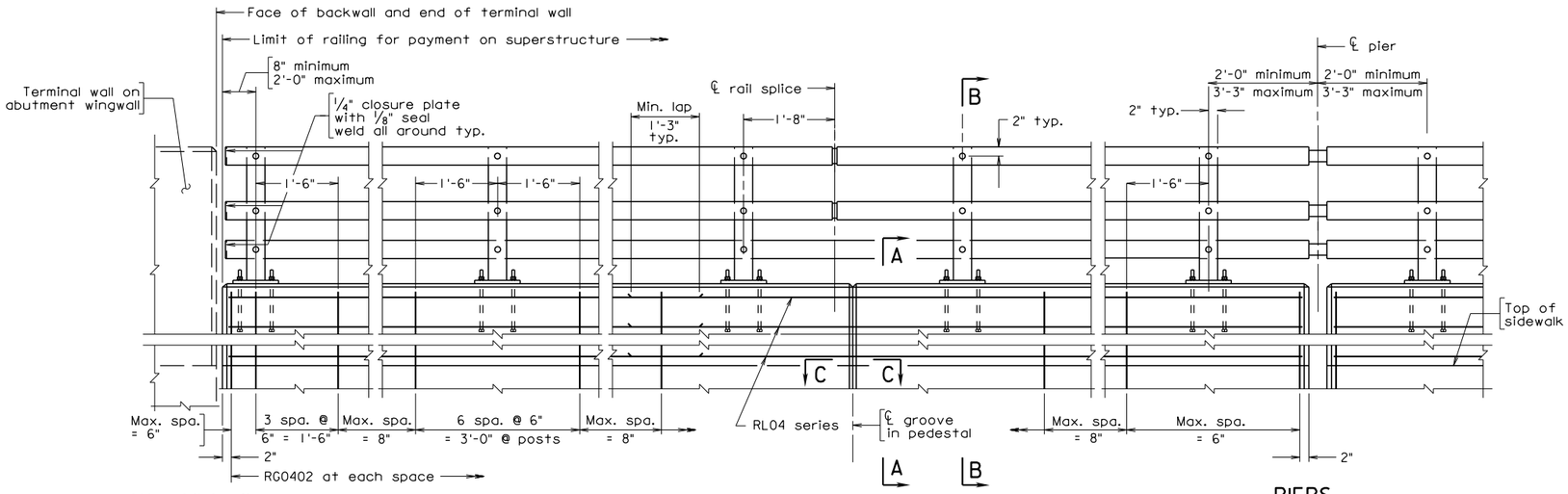

ABUTMENTS

ELEVATION

PIERS
with joint in slab

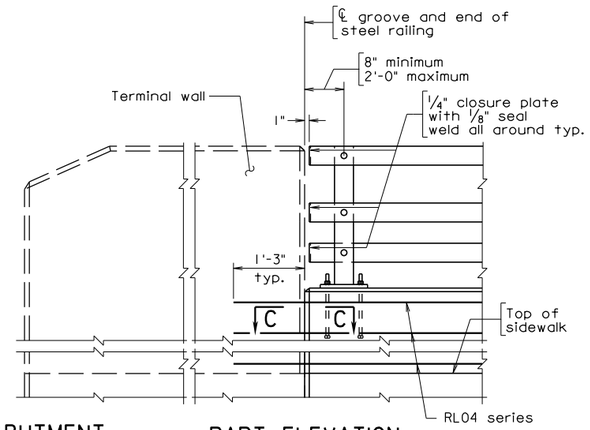

ABUTMENT

PART ELEVATION
Terminal Wall on Superstructure

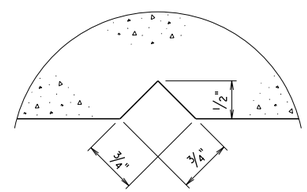

SECTION C-C
Full scale
Groove detail for both sides of rail

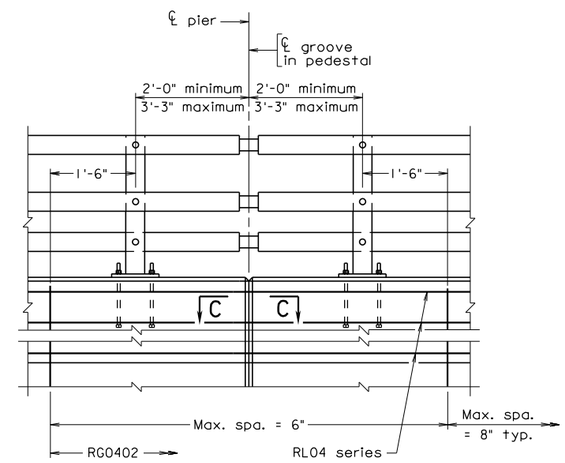

PIERS
Continuous - without joint in slab

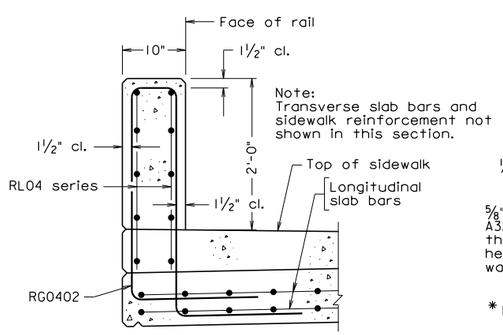

SECTION A-A
Scale: 1" = 1'-0"

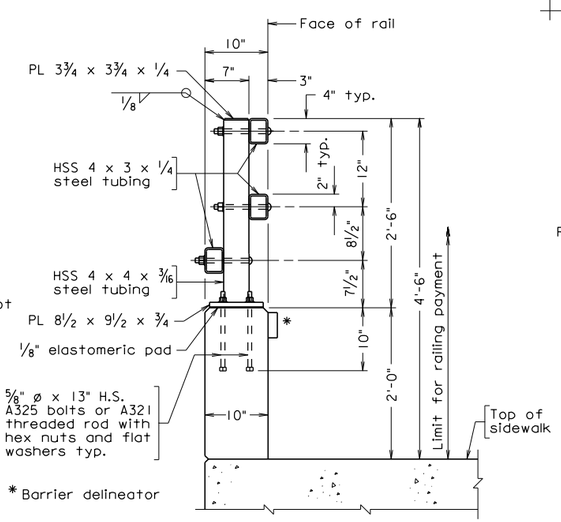

SECTION B-B
Scale: 1" = 1'-0"

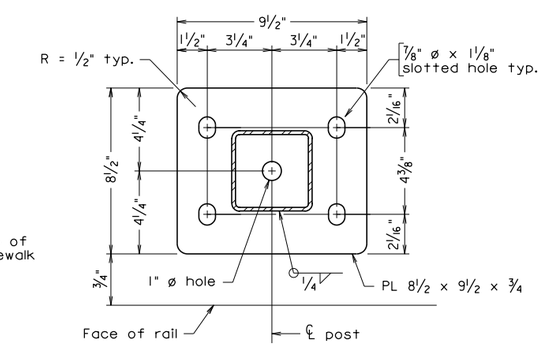

BASE PLATE DETAIL
Not to scale

Notes:

All reinforcing bars shall be Corrosion Resistant Reinforcing Steel, Class __.

All concrete shall be Class A4.

All bevels for concrete on this sheet shall be 3/4". Rounded edges with 1" radius may be used in lieu of bevels along top or railing.

Plates shall be ASTM A36 steel.

Posts and rail members shall be ASTM A500 Grade B steel. Steel pipe sleeves shall be ASTM A53. Round head bolts shall be ASTM449. All other bolts shall be ASTM A 325. Nuts shall be ASTM A563, Grade DH or ASTM A194, Grade 2H and washers shall be ASTM F436. All steel shall be hot dip galvanized.

Posts shall be seated on neoprene pads 1/8" minimum thickness, having a nominal durometer hardness of 60. Pads shall conform to post base dimensions.

Bolts for attaching rails to posts are 3/4" diameter round head (with slot in head) with hex nut and washer. Holes in post and railing tubing shall be 7/8" diameter. Bolt extensions beyond the nut shall be limited to the smaller of one and a half finishing turns or 1/4 inch. If the extension is longer, the excess will be cut off, the edges of the bolt end ground so that no sharp edges remain and cold galvanizing applied to damaged galvanized areas.

Cut bottom of posts to match cross slope before welding so that posts will be vertical. Steel shims may be used for adjusting post alignment, maximum thickness of shim build-up not to exceed 1/8". Where more tilting of the post is required, the concrete shall be ground down.

Anchor bolts may be set normal to profile grade.

Barrier delineator size, color, and spacing to be in accordance with the Specifications. Cost of delineator to be included in the price bid for railing. Reflective surface of barrier delineator, in all instances, to be facing oncoming traffic.

1/2" diameter drain holes shall be provided in both top and bottom rails approximately half-way between posts except at open joints near pier(s). Drain holes shall be provided at each low end of rail.

Spacing of grooves for U-back wings to be approximately 8'-0". Maximum spacing of grooves in pedestal shall be limited to 3 x post spacing, shall be centered between posts and shall be no closer than 10'-0" to joints.

Plan dimensions shown are measured in the respective horizontal and vertical planes. The reinforcing steel shown has been detailed based on a standard 1/4" per foot cross slope. The Contractor shall adjust the reinforcing steel as required for other cross slopes.

For details and reinforcing steel schedule of terminal wall, see sheet __.

For details of rail connections and additional notes, see sheet__.

REINFORCING STEEL SCHEDULE

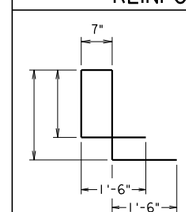

RG0402

Mark	Size	No.	Length	Pin ø	Location
RG0402	#4			3"	Parapet
RL04	#4			—	Parapet

Dimensions in bending diagram are out-to-out of bars.

No.	Description	Date

Revisions

COMMONWEALTH OF VIRGINIA
DEPARTMENT OF TRANSPORTATION

STRUCTURE AND BRIDGE DIVISION

54"-BR27C STEEL RAILING

Designed: S&B..DIV
Drawn: ....S&B..DIV
Checked: S&B..DIV

Date | Plan No. BR27C-15 | Sheet No.

Scale: 3/4" = 1'-0" unless otherwise noted.

©2012, Commonwealth of Virginia

br27c15.dgn

12-14-2012

Sealed and Signed by:
Julius F.J. Volgyi Jr.
Lic. No. 010487
On the date of
December 14, 2012

A copy of the original sealed and signed standard drawing is on file in the Central Office.

VDOT S&B DIVISION
RICHMOND, VA
STRUCTURAL ENGINEER

BR27C-15

54”-BR27_ STEEL RAILING

BR27C-SERIES

NOTES TO DESIGNER:

This railing is detailed for use on the outside of a structure as a traffic barrier mounted on a raised sidewalk when there is no other rail separating the pedestrian/bicycle access from traffic. The steel railing has a height of 4’-6” and has been crash tested for TL-4 (TL = test level). The crash tested rail has been modified to meet the rail opening requirements of the AASHTO *Standard Specifications for Highway Bridges* as well as the AASHTO *LRFD Bridge Design Specifications.* A design exception has been approved by the FHWA. The standard may be used when an open railing is required.

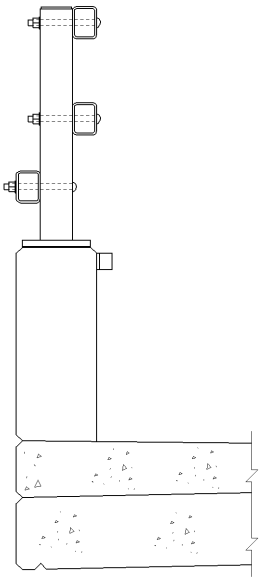

BR27C-15 STEEL RAILING
With Raised Sidewalk

Bid Item: Do not use the non-standard bid item for this rail. The bid item for this rail shall be RAILING BR27C 3 RAILS. See Office Practice, Vol. V – Part 2, Chapter 3.

The rail connections and fabricator’s notes (BR27C-16) and the appropriate terminal wall standard (BR27T-5 to BR27T-8) are to be included in the plans when using this standard.

It is the Contractor’s responsibility to determine the number of reinforcing bars required as well as any details or dimensions. Therefore, these items are to be left blank in the Reinforcing Steel Schedule.

54”-BR27_ STEEL RAILING

BR27C-SERIES

ADD THE FOLLOWING NOTES, DIMENSIONS, DETAILS, ETC. TO STANDARD:

NOTES:

Complete first note by adding the Class I, II or III of corrosion resistant reinforcing steel required. For additional information on corrosion resistant reinforcing steel (CRR), see Structure and Bridge Division Memorandum (current IIM-S&B-81).

Complete sheet no. for terminal wall.

Complete sheet no. for rail connections and fabricator’s notes.

REINFORCING STEEL SCHEDULE:

Add dimensions and length for rebar RG0402.

TITLE BLOCK:

Replace standard designation with Plan No.

STATE	FEDERAL AID ROUTE	FEDERAL AID PROJECT	STATE ROUTE	STATE PROJECT	SHEET NO.
VA.	—				

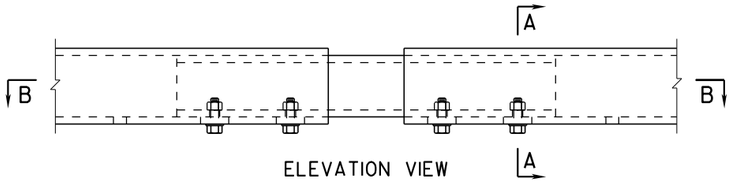

ELEVATION VIEW

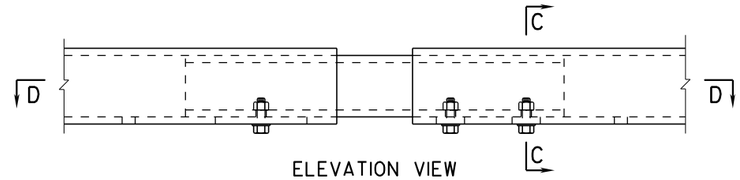

ELEVATION VIEW

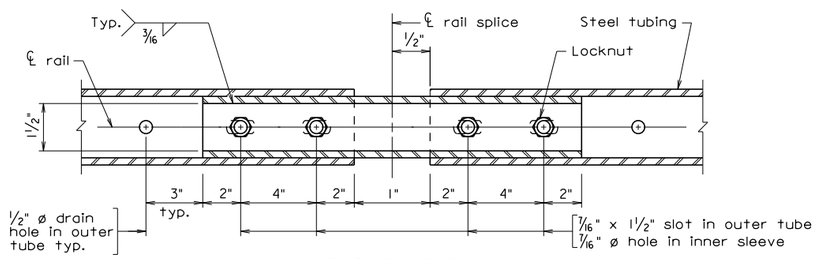

SECTION B-B

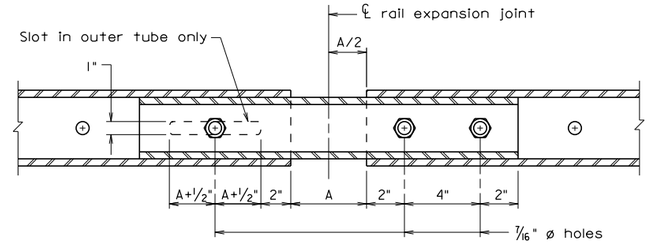

SECTION D-D

For details and dimensions not shown, see Section B-B.

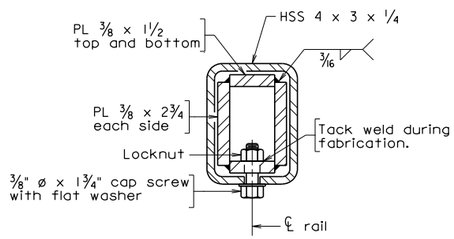

SECTION A-A
SECTION AT RAIL SPLICE

RAIL SPLICE DETAILS

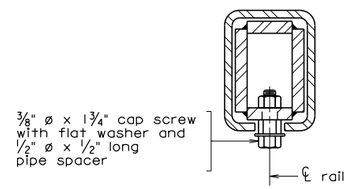

SECTION C-C

Details not shown similar to Section A-A.

RAIL EXPANSION JOINT DETAILS

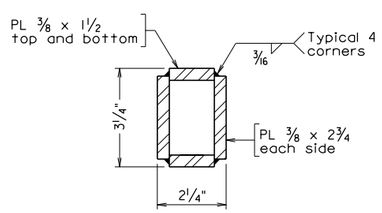

FINISHED DIMENSIONS OF INNER SLEEVE RAIL

Notes:

Rails to be continuous over a minimum of 3 posts before splicing.

Posts shall be equally spaced within a span. Maximum spacing is 7'-0". Minimum spacing is 6'-6".

Rail expansion joint shall be provided between any two posts which span a bridge expansion joint. Dimension A for expansion joints is equal to deck joint opening + 1". Bolts in slot shall be tightened only to a point that will allow railing movement.

For steel railing, see sheet __.

The Contractor shall determine all dimensions and details necessary for installation.

Bid item for railing shall include rails, rail posts, bearing pads, anchor assemblies, sleeves, grounding materials and other associated metal parts as shown on the plans. Also included in bid item are concrete noted in plans and reinforcing steel indicated in Reinforcing Steel Schedules.

br27c16.dgn

08-07-2012

BR27C-16

Sealed and Signed by:
Julius F.J. Volgyi Jr.
Lic. No. 010487
On the date of
Aug. 7, 2012

A copy of the original sealed and signed standard drawing is on file in the Central Office.

VDOT S&B DIVISION
RICHMOND, VA
STRUCTURAL ENGINEER

Not to scale

© 2012, Commonwealth of Virginia

No.	Description	Date

Revisions

COMMONWEALTH OF VIRGINIA
DEPARTMENT OF TRANSPORTATION

STRUCTURE AND BRIDGE DIVISION

BR27C RAIL CONNECTIONS AND NOTES

Designed: S&B DIV
Drawn: S&B DIV
Checked: S&B DIV

Date	Plan No.	Sheet No.
	BR27C-16	

BR27C-SERIES STEEL RAILING

RAIL CONNECTIONS AND FABRICATOR'S NOTES

NOTES TO DESIGNER:

Include this standard in plans when using standard, BR27C-12 to BR27C-15.

ADD THE FOLLOWING NOTES, DIMENSIONS, DETAILS, ETC. TO STANDARD:

FABRICATOR'S NOTES:

Complete sheet no for steel railing.

STATE	FEDERAL AID ROUTE	FEDERAL AID PROJECT	STATE ROUTE	STATE PROJECT	SHEET NO.
VA.	—				

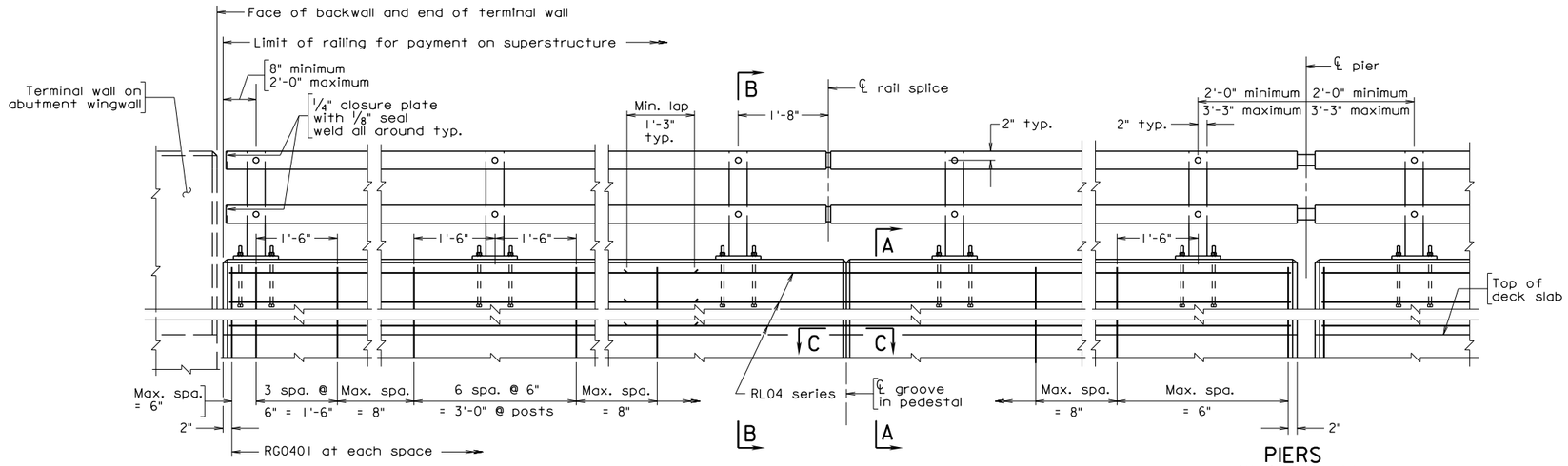

ABUTMENTS

ELEVATION

PIERS
with joint in slab

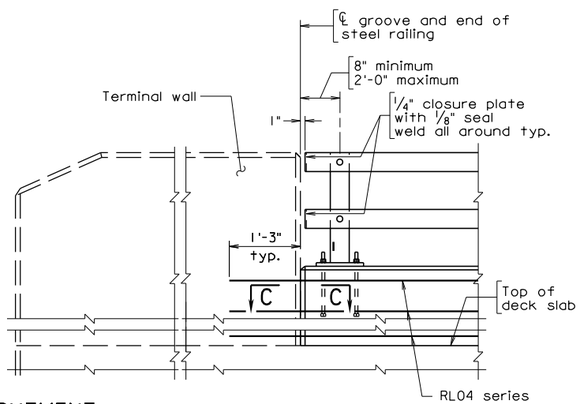

ABUTMENT

PART ELEVATION
Terminal Wall on Superstructure

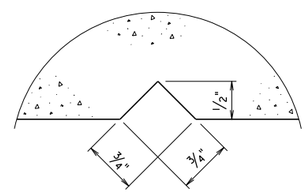

SECTION C-C
Full scale
Groove detail for both sides of rail

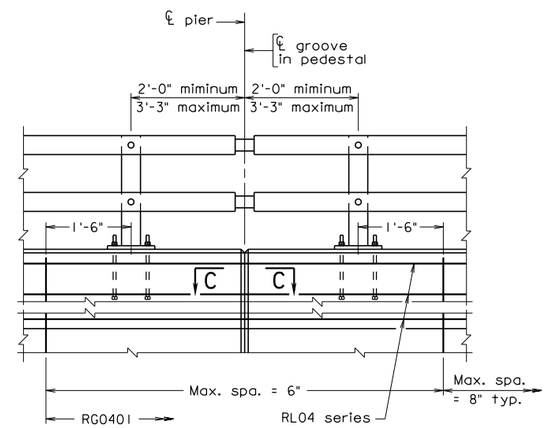

PIERS
Continuous - without joint in slab

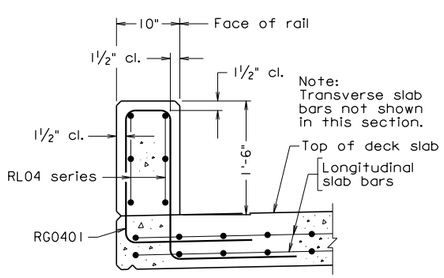

SECTION A-A
Scale: 1" = 1'-0"

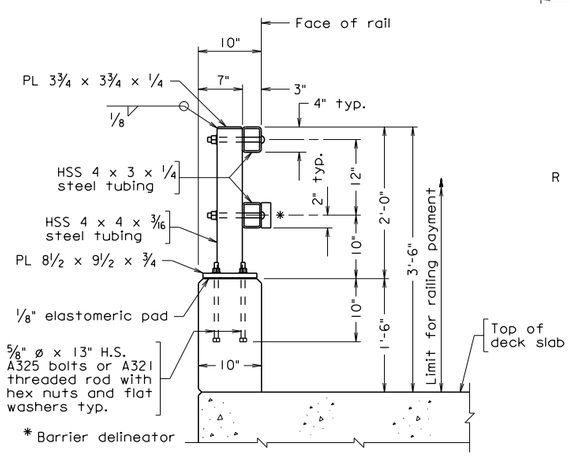

SECTION B-B
Scale: 1" = 1'-0"

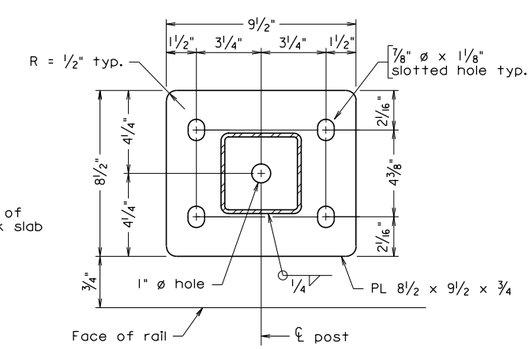

BASE PLATE DETAIL
Not to scale

Notes:

All reinforcing bars shall be Corrosion Resistant Reinforcing Steel, Class __.

All concrete shall be Class A4.

All bevels for concrete on this sheet shall be 3/4". Rounded edges with 1" radius may be used in lieu of bevels along top or railing.

Plates shall be ASTM A36 steel.

Posts and rail members shall be ASTM A500 Grade B steel. Steel pipe sleeves shall be ASTM A53. Round head bolts shall be ASTM449. All other bolts shall be ASTM A 325. Nuts shall be ASTM A563, Grade DH or ASTM A194, Grade 2H and washers shall be ASTM F436. All steel shall be hot dip galvanized.

Posts shall be seated on neoprene pads 1/8" minimum thickness, having a nominal durometer hardness of 60. Pads shall conform to post base dimensions.

Bolts for attaching rails to posts are 3/4" diameter round head (with slot in head) with hex nut and washer. Holes in post and railing tubing shall be 7/8" diameter. Bolt extensions beyond the nut shall be limited to the smaller of one and a half finishing turns or 1/4 inch. If the extension is longer, the excess will be cut off, the edges of the bolt end ground so that no sharp edges remain and cold galvanizing applied to damaged galvanized areas.

Cut bottom of posts to match cross slope before welding so that posts will be vertical. Steel shims may be used for adjusting post alignment, maximum thickness of shim build-up not to exceed 1/8". Where more tilting of the post is required, the concrete shall be ground down.

Anchor bolts may be set normal to profile grade.

Barrier delineator size, color, and spacing to be in accordance with the Specifications. Cost of delineator to be included in the price bid for railing. Reflective surface of barrier delineator, in all instances, to be facing oncoming traffic.

1/2" diameter drain holes shall be provided in both top and bottom rails approximately half-way between posts except at open joints near pier(s). Drain holes shall be provided at each low end of rail.

Spacing of grooves for U-back wings to be approximately 8'-0". Maximum spacing of grooves in pedestal shall be limited to 3 x post spacing, shall be centered between posts and shall be no closer than 10'-0" to joints.

Plan dimensions shown are measured in the respective horizontal and vertical planes. The reinforcing steel shown has been detailed based on a standard 1/4" per foot cross slope. The Contractor shall adjust the reinforcing steel as required for other cross slopes.

For details and reinforcing steel schedule of terminal wall, see sheet __.

For details of rail connections and additional notes, see sheet__.

REINFORCING STEEL SCHEDULE

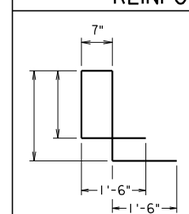

RG0401

Mark	Size	No.	Length	Pin ø	Location
RG0401	#4			3"	Parapet
RL04	#4			—	Parapet

Dimensions in bending diagram are out-to-out of bars.

br27d8.dgn

12-14-2012

BR27D-8

Sealed and Signed by:
Julius F.J. Volgyi Jr.
Lic. No. 010487
On the date of
December 14, 2012

A copy of the original sealed and signed standard drawing is on file in the Central Office.

VDOT S&B DIVISION
RICHMOND, VA
STRUCTURAL ENGINEER

Scale: 3/4" = 1'-0" unless otherwise noted.

©2012, Commonwealth of Virginia

No.	Description	Date

Revisions

COMMONWEALTH OF VIRGINIA
DEPARTMENT OF TRANSPORTATION

STRUCTURE AND BRIDGE DIVISION

42"-BR27D STEEL RAILING

Designed: S&B DIV
Drawn: S&B DIV
Checked: S&B DIV

Date

Plan No. BR27D-8

Sheet No.

42”-BR27_ STEEL RAILING

BR27D SERIES

NOTES TO DESIGNER:

The railing as detailed is for use as a traffic barrier. The steel railing has a height of 3’-6” and has been crash tested for TL-2 (TL = test level). The rail has not been modified from that which was crash-tested. The standard may be used when an open railing is required. This standard shall not be used for sidewalk application.

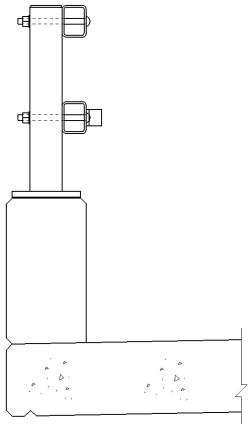

BR27D-8 STEEL RAILING

Bid Items: Do not use the non-standard bid item for this rail. The bid item for this rail shall be RAILING BR27D 2 RAILS. See Office Practice, Vol. V – Part 2, Chapter 3.

The rail connections and fabricator’s note (BR27D-11) and the appropriate terminal wall standard (BR27T-1 to BR27T-4) are to be included in the plans when using this standard.

If an initial bituminous overlay is used on the bridge at the time of construction, vertical dimensions and dimensions for reinforcing steel need to be adjusted. The dimensions shown are established from the top of the roadway surface. Therefore, for example if a 1” overlay at the roadway surface is set, the 1’-6” dimension and overall 3’-6” height of the rail would need to be adjusted to 1’-7” and 3’-7” respectively (Section B-B) and the 1’-6” dimension in Section A-A would have to be adjusted to 1’-7”.

It is the Contractor’s responsibility to determine the number of reinforcing bars required as well as any details or dimensions. Therefore, these items are to be left blank in the Reinforcing Steel Schedule.

42”-BR27_ STEEL RAILING

BR27D-SERIES

ADD THE FOLLOWING NOTES, DIMENSIONS, DETAILS, ETC. TO STANDARD:

SECTION A-A:

Modify vertical dimension (1’-6”) as noted above if an initial overlay is used on bridge.

SECTION B-B:

Modify vertical dimensions (1’-6” and 3’-6” railing height) as noted above if an initial overlay is used on bridge.

NOTES:

Complete first note by adding the Class I, II or III of corrosion resistant reinforcing steel required. For additional information on corrosion resistant reinforcing steel (CRR), see structure and Bridge Division Memorandum (current IIM-S&B-81).

Complete sheet no. for terminal wall.

Complete sheet no. for rail connections and fabricator’s notes.

REINFORCING STEEL SCHEDULE:

Add dimensions and length for rebar RG0401.

TITLE BLOCK:

Replace standard designation with Plan No.

STATE	FEDERAL AID ROUTE	FEDERAL AID PROJECT	STATE ROUTE	STATE PROJECT	SHEET NO.
VA.	—				

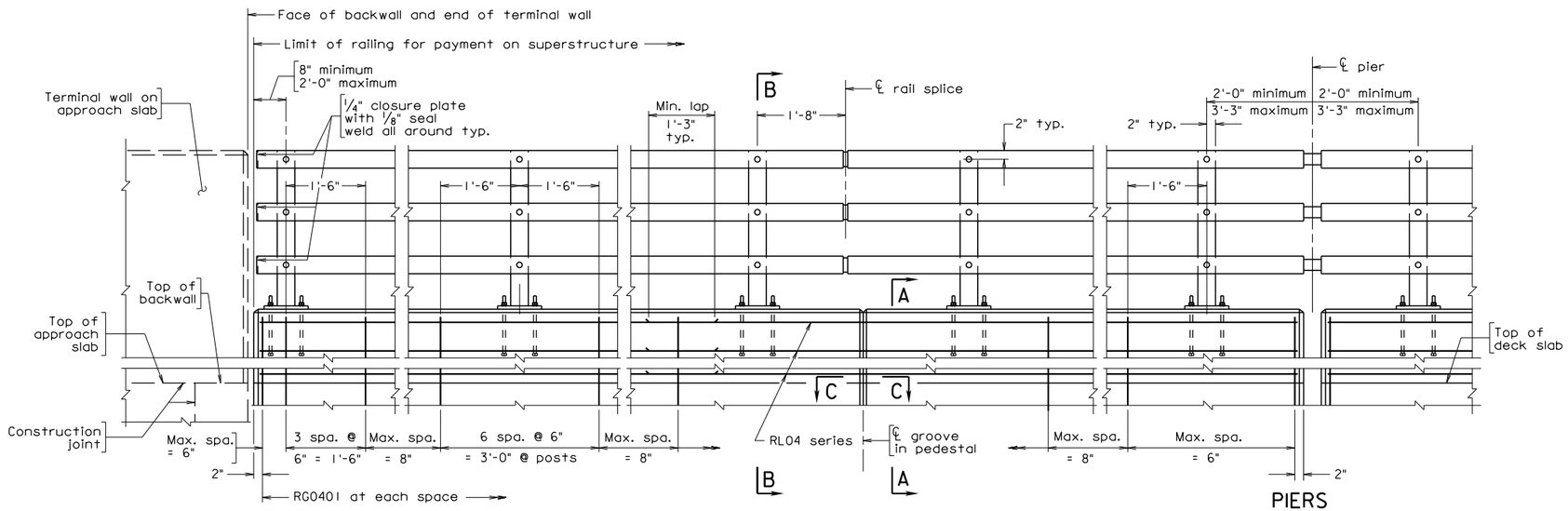

ABUTMENTS

ELEVATION

PIERS
with joint in slab

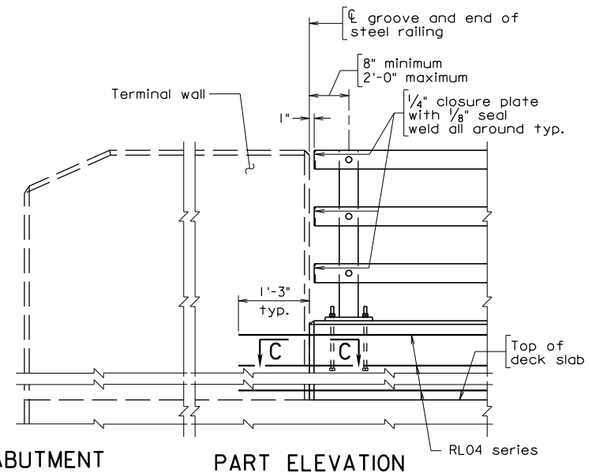

ABUTMENT

PART ELEVATION
Terminal Wall on Superstructure

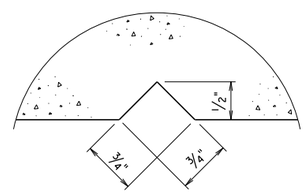

SECTION C-C
Full scale
Groove detail for both sides of rail

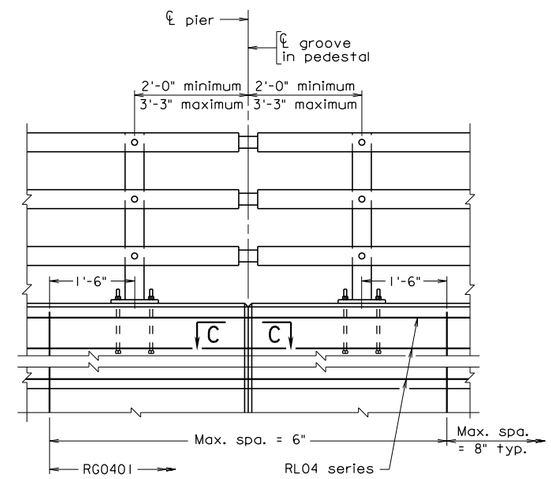

PIERS
Continuous - without joint in slab

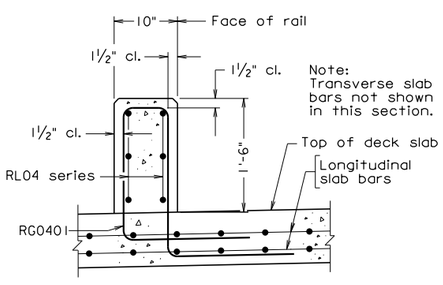

SECTION A-A
Scale: 1" = 1'-0"

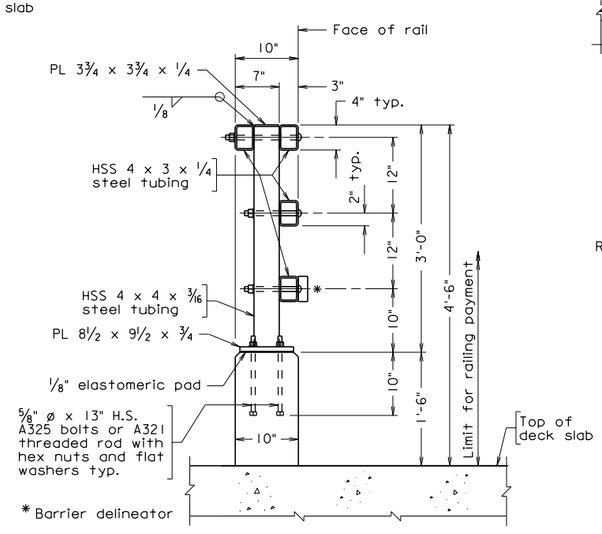

SECTION B-B
Scale: 1" = 1'-0"

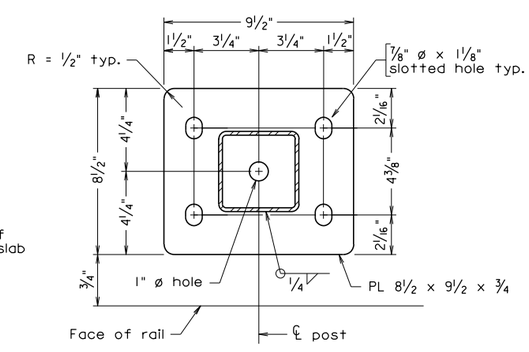

BASE PLATE DETAIL
Not to scale

Notes:

All reinforcing bars shall be Corrosion Resistant Reinforcing Steel, Class __.

All concrete shall be Class A4.

All bevels for concrete on this sheet shall be 3/4". Rounded edges with 1" radius may be used in lieu of bevels along top or railing.

Plates shall be ASTM A36 steel.

Posts and rail members shall be ASTM A500 Grade B steel. Steel pipe sleeves shall be ASTM A53. Round head bolts shall be ASTM449. All other bolts shall be ASTM A 325. Nuts shall be ASTM A563, Grade DH or ASTM A194, Grade 2H and washers shall be ASTM F436. All steel shall be hot dip galvanized.

Posts shall be seated on neoprene pads 1/8" minimum thickness, having a nominal durometer hardness of 60. Pads shall conform to post base dimensions.

Bolts for attaching rails to posts are 3/4" diameter round head (with slot in head) with hex nut and washer. Holes in post and railing tubing shall be 7/8" diameter. Bolt extensions beyond the nut shall be limited to the smaller of one and a half finishing turns or 1/4 inch. If the extension is longer, the excess will be cut off, the edges of the bolt end ground so that no sharp edges remain and cold galvanizing applied to damaged galvanized areas.

Cut bottom of posts to match cross slope before welding so that posts will be vertical. Steel shims may be used for adjusting post alignment, maximum thickness of shim build-up not to exceed 1/8". Where more tilting of the post is required, the concrete shall be ground down.

Anchor bolts may be set normal to profile grade.

Barrier delineator size, color, and spacing to be in accordance with the Specifications. Cost of delineator to be included in the price bid for railing. Reflective surface of barrier delineator, in all instances, to be facing oncoming traffic.

1/2" diameter drain holes shall be provided in both top and bottom rails approximately half-way between posts except at open joints near pier(s). Drain holes shall be provided at each low end of rail.

Spacing of grooves for U-back wings to be approximately 8'-0". Maximum spacing of grooves in pedestal shall be limited to 3 x post spacing, shall be centered between posts and shall be no closer than 10'-0" to joints.

Plan dimensions shown are measured in the respective horizontal and vertical planes. The reinforcing steel shown has been detailed based on a standard 1/4" per foot cross slope. The Contractor shall adjust the reinforcing steel as required for other cross slopes.

For details and reinforcing steel schedule of terminal wall, see sheet __.

For details of rail connections and additional notes, see sheet__.

REINFORCING STEEL SCHEDULE

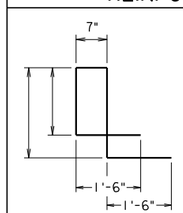

RG0401

Mark	Size	No.	Length	Pin ø	Location
RG0401	#4			3"	Parapet
RL04	#4			—	Parapet

Dimensions in bending diagram are out-to-out of bars.

Scale: 3/4" = 1'-0" unless otherwise noted.

© 2012, Commonwealth of Virginia

br27d9.dgn

12-14-2012

Sealed and Signed by: Julius F.J. Volgyi Jr. Lic. No. 010487 On the date of December 14, 2012

A copy of the original sealed and signed standard drawing is on file in the Central Office.

VDOT S&B DIVISION
RICHMOND, VA
STRUCTURAL ENGINEER

BR27D-9

No.	Description	Date

Revisions

COMMONWEALTH OF VIRGINIA
DEPARTMENT OF TRANSPORTATION

STRUCTURE AND BRIDGE DIVISION

54"-BR27D STEEL RAILING

Designed: S&B DIV	Date	Plan No.	Sheet No.
Drawn: S&B DIV		BR27D-9	
Checked: S&B DIV			

54”-BR27- STEEL RAILING

BR27D-SERIES

NOTES TO DESIGNER:

This railing as detailed is for use as a traffic barrier to separate pedestrian/bicycle shared use path (SUP) from traffic. The steel railing has a height of 4’-6” and has been crash tested for TL-2 (TL = test level). The crash tested rail has been modified from that which was crash tested. The railing does not meet the rail opening requirements in the AASHTO *Standard Specification for Highway Bridges* as wall as the AASHTO *LRFD Bridge Design Specifications*. A design exception has been approved by FHWA. The standard may be used when an open railing is required.

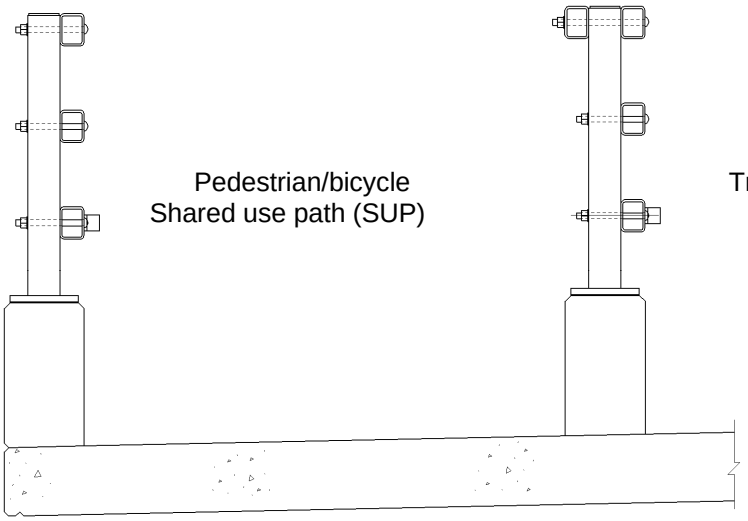

On Outside of Structure
(Standard BR27D-10)

On Inside of Structure

BR27D-9 STEEL RAILING

SUP: For geometrics of shared used path, see Office Practice, Vol. V – Part 2, Chapter 6, sheets 4-10 to 4-16.

Bid Item: Do not use the non-standard bid item for this rail. The bid item for this rail shall be RAILING BR27D 4 RAILS. See Office Practice, Vol. V – Part 2, Chapter 3.

The rail connections and fabricator’s notes (BR27D-11) and the appropriate terminal wall standard (BR27T-5 to BR27T-9) are to be included in the plans when using this standard.

If an initial bituminous overlay is used on the bridge at the time of construction, vertical dimensions and dimensions for reinforcing steel need to be adjusted. The dimensions shown are established from the top of the roadway surface. Therefore, for example if a 1” overlay at the roadway surface is set, the 1’-6” dimension and overall 4’-6” height of the rail would need to be adjusted to 1’-6” and 4’-7” respectively (Section B-B) and the 1’-6” dimension in Section A-A would have to be adjusted to 1’-7”.

54”-BR27_ STEEL RAILING

BR27D-SERIES

NOTES TO DESIGNER: (cont’d)

It is the Contractor’s responsibility to determine the number of reinforcing bars required as well as any details or dimensions. Therefore, these items are to be left blank in the Reinforcing Steel Schedule.

ADD THE FOLLOWING NOTES, DIMENSIONS, DETAILS, ETC. TO STANDARD:

SECTION A-A:

Modify vertical dimension (1’-6”) as noted above if an initial overlay is used on bridge.

SECTION B-B:

Modify vertical dimensions (1’-6” and 4’-6” railing height) as noted above if an initial overlay is used on bridge.

NOTES:

Complete first note by adding the Class I, II or III of corrosion resistant reinforcing steel required. For additional information on corrosion resistant reinforcing steel (CRR), see Structure and Bridge Division Memorandum (current IIM-S&B-81).

Complete sheet no. for terminal wall.

Complete sheet no. for rail connections and fabricator’s notes.

REINFORCING STEEL SCHEDULE:

Add dimensions and length for rebar RG0401.

TITLE BLOCK:

Replace standard designation with Plan No.

STATE	FEDERAL AID ROUTE	FEDERAL AID PROJECT	STATE ROUTE	STATE PROJECT	SHEET NO.
VA.	—				

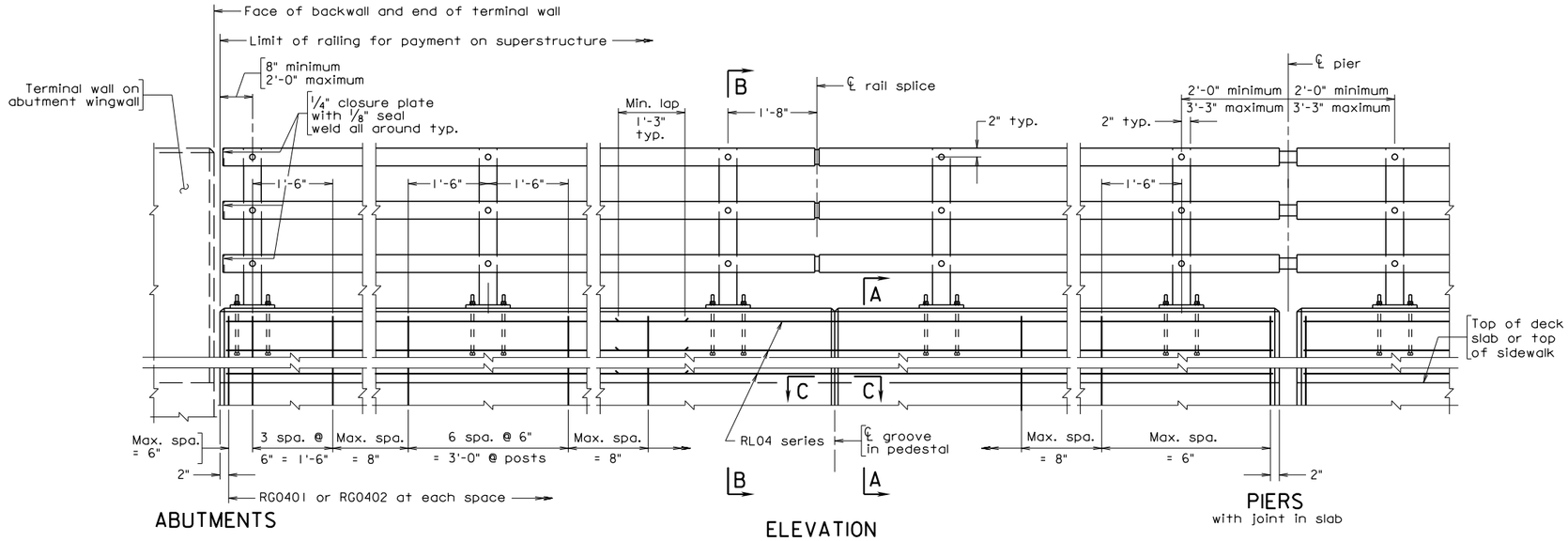

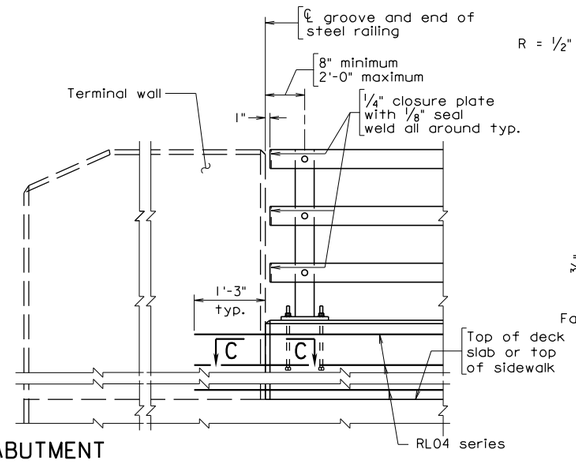

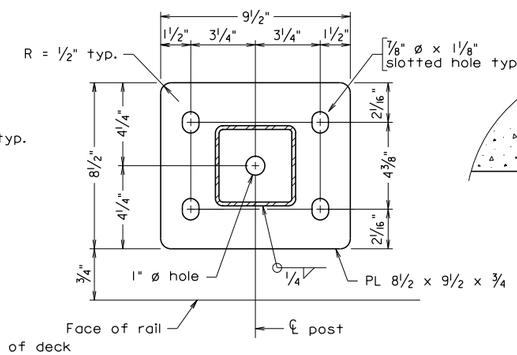

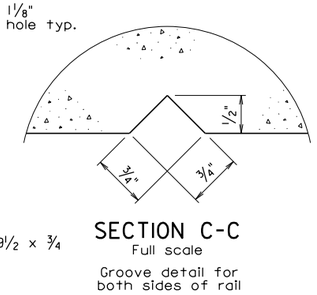

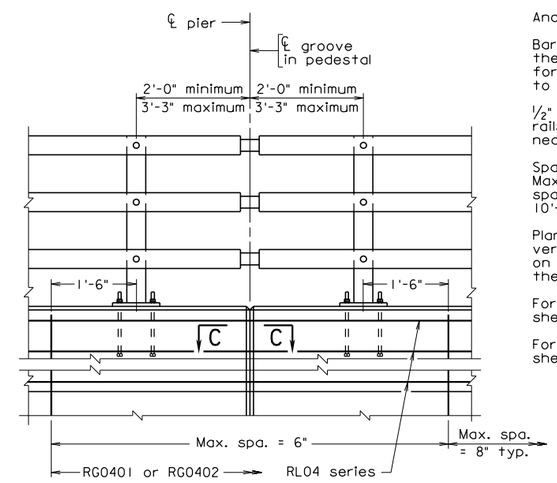

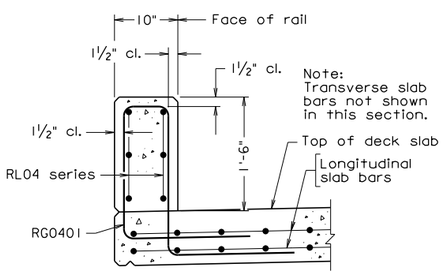

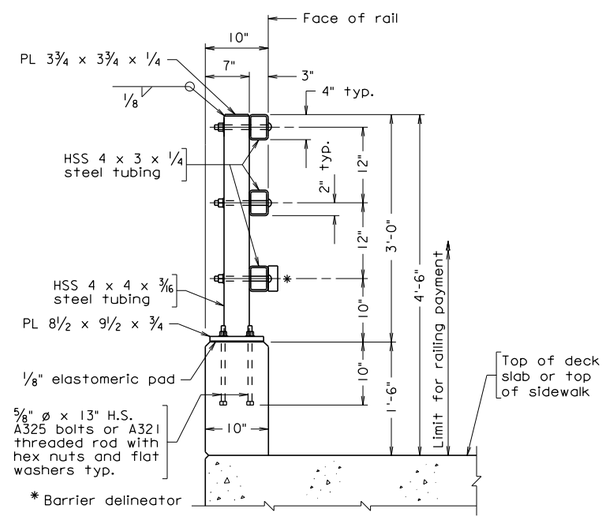

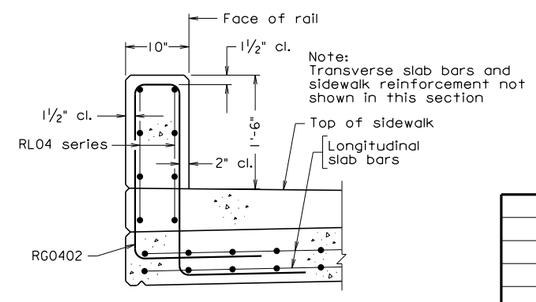

Notes:

All reinforcing bars shall be Corrosion Resistant Reinforcing Steel, Class __.

All concrete shall be Class A4.

All bevels for concrete on this sheet shall be 3/4". Rounded edges with 1" radius may be used in lieu of bevels along top or railing.

Plates shall be ASTM A36 steel.

Posts and rail members shall be ASTM A500 Grade B steel. Steel pipe sleeves shall be ASTM A53. Round head bolts shall be ASTM449. All other bolts shall be ASTM A 325. Nuts shall be ASTM A563, Grade DH or ASTM A194, Grade 2H and washers shall be ASTM F436. All steel shall be hot dip galvanized.

Posts shall be seated on neoprene pads 1/8" minimum thickness, having a nominal durometer hardness of 60. Pads shall conform to post base dimensions.

Bolts for attaching rails to posts are 3/4" diameter round head (with slot in head) with hex nut and washer. Holes in post and railing tubing shall be 7/8" diameter. Bolt extensions beyond the nut shall be limited to the smaller of one and a half finishing turns or 1/4 inch. If the extension is longer, the excess will be cut off, the edges of the bolt end ground so that no sharp edges remain and cold galvanizing applied to damaged galvanized areas.

Cut bottom of posts to match cross slope before welding so that posts will be vertical. Steel shims may be used for adjusting post alignment, maximum thickness of shim build-up not to exceed 1/8". Where more tilting of the post is required, the concrete shall be ground down.

Anchor bolts may be set normal to profile grade.

Barrier delineator size, color, and spacing to be in accordance with the Specifications. Cost of delineator to be included in the price bid for railing. Reflective surface of barrier delineator, in all instances, to be facing oncoming traffic.

1/2" diameter drain holes shall be provided in both top and bottom rails approximately half-way between posts except at open joints near pier(s). Drain holes shall be provided at each low end of rail.

Spacing of grooves for U-back wings to be approximately 8'-0". Maximum spacing of grooves in pedestal shall be limited to 3 x post spacing, shall be centered between posts and shall be no closer than 10'-0" to joints.

Plan dimensions shown are measured in the respective horizontal and vertical planes. The reinforcing steel shown has been detailed based on a standard 1/4" per foot cross slope. The Contractor shall adjust the reinforcing steel as required for other cross slopes.

For details and reinforcing steel schedule of terminal wall, see sheet __.

For details of rail connections and additional notes, see sheet__.

REINFORCING STEEL SCHEDULE

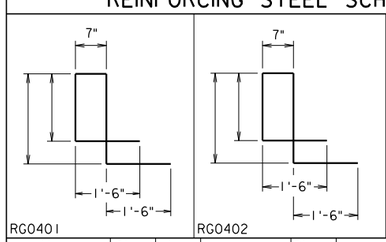

Mark	Size	No.	Length	Pin ø	Location
RG0401	#4			3"	Parapet
RG0402	#4			3"	Parapet
RL04	#4			—	Parapet

Dimensions in bending diagram are out-to-out of bars.

Scale: 3/4" = 1'-0" unless otherwise noted.

©2012, Commonwealth of Virginia

No.	Description	Date
	Revisions	

COMMONWEALTH OF VIRGINIA
DEPARTMENT OF TRANSPORTATION

STRUCTURE AND BRIDGE DIVISION

54"-BR27D STEEL RAILING

Designed: S&B DIV
Drawn: S&B DIV
Checked: S&B DIV

Date	Plan No.	Sheet No.
	BR27D-10	

Sealed and Signed by: Julius F.J. Volgyi Jr. Lic. No. 010487 On the date of December 14, 2012

A copy of the original sealed and signed standard drawing is on file in the Central Office.

VDOT S&B DIVISION
RICHMOND, VA
STRUCTURAL ENGINEER

12-14-2012

BR27D-10

br27d10.dgn

54”-BR27_ STEEL RAILING

BR27D-SERIES

NOTES TO DESIGNER:

This railing is detailed for use on the outside of a structure either when a traffic barrier separates a pedestrian/bicycle shared use path (SUP) from traffic or as a traffic barrier mounted on a sidewalk. The steel railing has a height of 4’-6” and has been crash tested for TL-2 (TL = test level). The crash tested rail has been modified from that which was crash tested. The railing does not meet the rail opening requirements in the AASHTO *Standard Specification for Highway Bridges* as wall as the AASHTO *LRFD Bridge Design Specifications*. A design exception has been approved by FHWA. The standard may be used when an open railing is required.

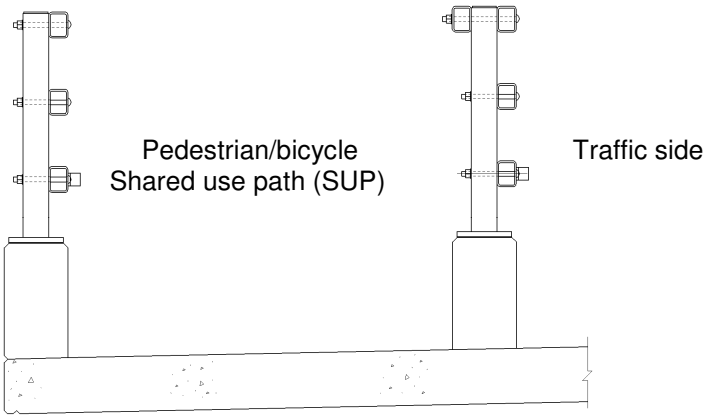

On Outside of Structure

BR27D-10 STEEL RAILING
Without Sidewalk

On Inside of Structure
(Standard BR27D-9)

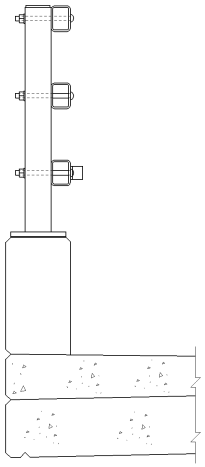

On Outside of Structure

BR27D-10 STEEL RAILING
With Raised Sidewalk

SUP: For geometrics of shared used path, see Office Practice, Vol V – Part 2, Chapter 6, sheets 4-10 to 4-16.

Bid Item: Do not use the non-standard bid item for this rail. The bid item for this rail shall be RAILING BR27D 3 RAILS. See Office Practice, Vol. V – Part 2, Chapter 3.

The rail connections and fabricator’s notes (BR27D-11) and the appropriate terminal wall standard (BR27T-5 to BR27T-8) are to be included in the plans when using this standard. If this standard is used with an inside traffic barrier (ie., Standard BR27D-9), the guard rail transitioning from the roadway will not be attached to the terminal wall on the outside of structure, but on the inside of structure. Therefore, the terminal wall standard selected would have to be modified by removing details and notes that pertain to guard rail attachment.

54”-BR27_ STEEL RAILING

BR27D-SERIES

NOTES TO DESIGNER: (cont’d)

If an initial bituminous overlay is used on the bridge at the time of construction, vertical dimensions and dimensions for reinforcing steel need to be adjusted. The dimensions shown are established from the top of the roadway surface. Therefore, for example if a 1” overlay at the roadway surface is set, the 1’-6” dimension and overall 4’-6” height of the rail would need to be adjusted to 1’-7” and 4’-7” respectively (Section B-B) and the 1’-6” dimension in Section A-A would have to be adjusted to 1’-7”.

It is the Contractor’s responsibility to determine the number of reinforcing bars required as well as any details or dimensions. Therefore, these items are to be left blank in the Reinforcing Steel Schedule.

ADD THE FOLLOWING NOTES, DIMENSIONS, DETAILS, ETC. TO STANDARD:

SECTION A-A:

Modify vertical dimension (1’-6”) as noted above if an initial overlay is used on bridge.

SECTION B-B:

Modify vertical dimensions (1’-6” and 4’-6” railing height) as noted above if an initial overlay is used on bridge.

NOTES:

Complete first note by adding the Class I, II or III of corrosion resistant reinforcing steel required. For additional information on corrosion resistant reinforcing steel (CRR), see Structure and Bridge Division Memorandum (current IIM-S&B-81).

Complete sheet no. for terminal wall.

Complete sheet no. for rail connections and fabricator’s notes.

REINFORCING STEEL SCHEDULE:

Add dimension and length for rebar RG0401 or RG0402.

TITLE BLOCK:

Replace standard designation with Plan No.

STATE	FEDERAL AID ROUTE	FEDERAL AID PROJECT	STATE ROUTE	STATE PROJECT	SHEET NO.
VA.	—				

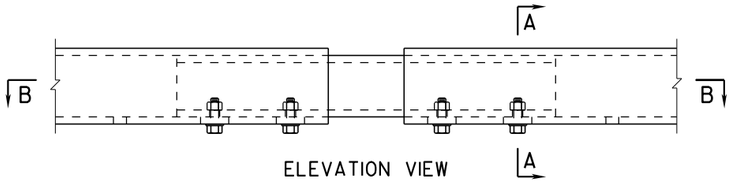

ELEVATION VIEW

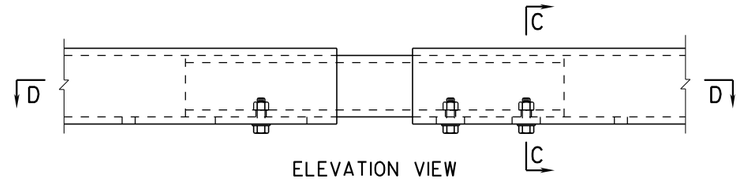

ELEVATION VIEW

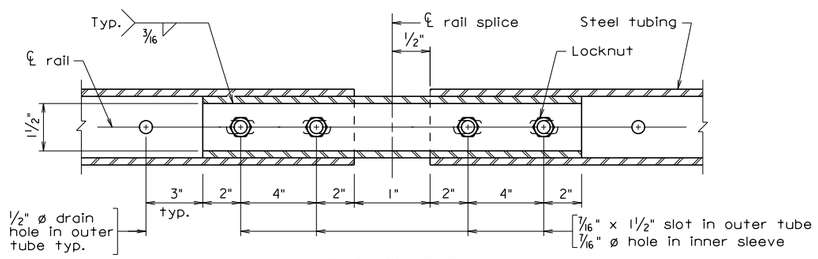

SECTION B-B

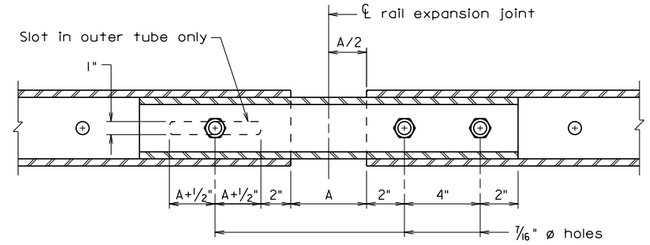

SECTION D-D

For details and dimensions not shown, see Section B-B.

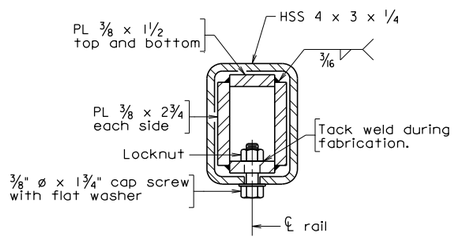

SECTION A-A
SECTION AT RAIL SPLICE

RAIL SPLICE DETAILS

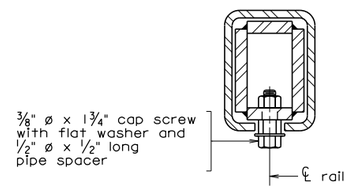

SECTION C-C

Details not shown similar to Section A-A.

RAIL EXPANSION JOINT DETAILS

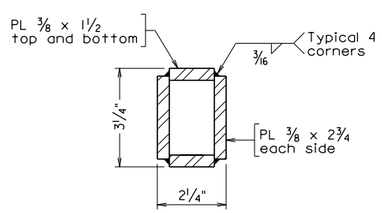

FINISHED DIMENSIONS OF INNER SLEEVE RAIL

Notes:

Rails to be continuous over a minimum of 3 posts before splicing.

Posts shall be equally spaced within a span. Maximum spacing is 7'-0". Minimum spacing is 6'-6".

Rail expansion joint shall be provided between any two posts which span a bridge expansion joint. Dimension A for expansion joints is equal to deck joint opening + 1". Bolts in slot shall be tightened only to a point that will allow railing movement.

For steel railing, see sheet __.

The Contractor shall determine all dimensions and details necessary for installation.

Bid item for railing shall include rails, rail posts, bearing pads, anchor assemblies, sleeves, grounding materials and other associated metal parts as shown on the plans. Also included in bid item are concrete noted in plans and reinforcing steel indicated in Reinforcing Steel Schedules.

br27d11.dgn

08-07-2012

BR27D-11

Sealed and Signed by:
Julius F.J. Volgyi Jr.
Lic. No. 010487
On the date of
Aug. 7, 2012

A copy of the original sealed and signed standard drawing is on file in the Central Office.

VDOT S&B DIVISION
RICHMOND, VA
STRUCTURAL ENGINEER

Not to scale

© 2012, Commonwealth of Virginia

No.	Description	Date

Revisions

COMMONWEALTH OF VIRGINIA
DEPARTMENT OF TRANSPORTATION

STRUCTURE AND BRIDGE DIVISION

BR27D RAIL CONNECTIONS AND NOTES

Designed: S&B DIV
Drawn: S&B DIV
Checked: S&B DIV

Date

Plan No. BR27D-11

Sheet No.

BR27D-SERIES STEEL RAILING

RAIL CONNECTIONS AND FABRICATOR'S NOTES

NOTES TO DESIGNER:

Include this standard in plans when using standard, BR27D-8 to BR27D-10.

ADD THE FOLLOWING NOTES, DIMENSIONS, DETAILS, ETC. TO STANDARD:

FABRICATOR'S NOTES:

Complete sheet no for steel railing.

STATE	FEDERAL AID ROUTE	FEDERAL AID PROJECT	STATE ROUTE	STATE PROJECT	SHEET NO.
VA.	—				

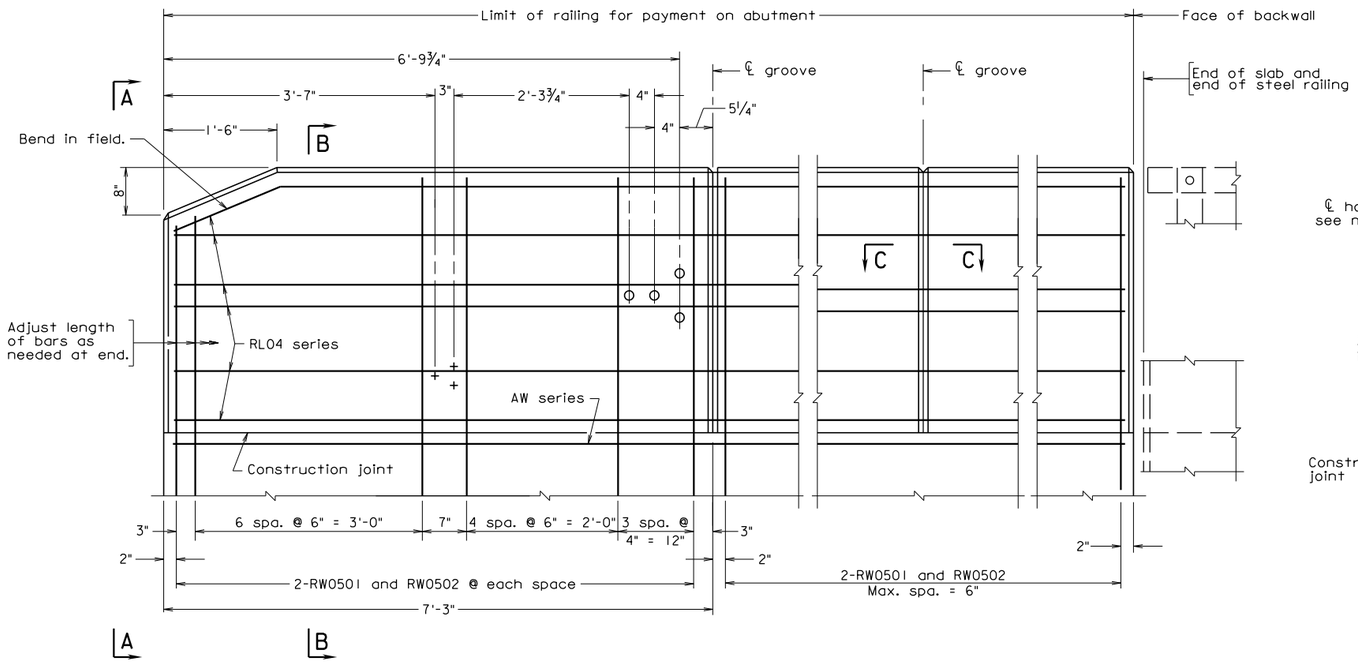

TERMINAL WALL

U-BACK WING

ELEVATION

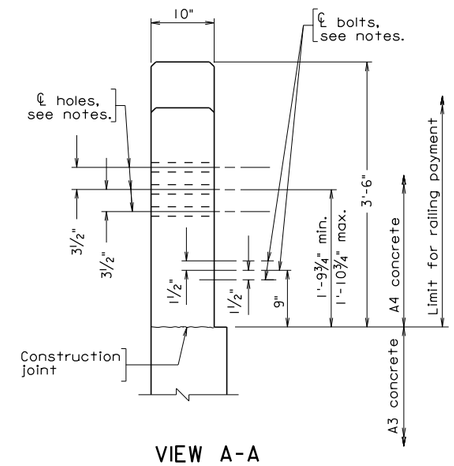

VIEW A-A

Notes:

All bevels for concrete on this sheet shall be ¾". Rounded edges with 1" radius may be used in lieu of bevels along top of rail.

All reinforcing bars shall be Corrosion Resistant Reinforcing Steel, Class __.

Each terminal wall shall be cast as one piece.

The Contractor shall determine all details necessary for installation.

All concrete shall be Class A4.

For details of wingwall below construction joint, see abutment sheets.

Terminal walls are detailed to take guardrail attachment GR-FOA-1.

Holes, where shown, shall be formed with sleeves of 1½" diameter nominal pipe.

Bolts for guardrail attachment where shown shall be ⅝" diameter expansion anchor bolts 6" long to be drilled and installed when rub rail is attached.

For details and reinforcing steel schedule of steel railing, see sheet __.

Bid item for terminal wall shall include concrete noted in plans and reinforcing steel indicated in Reinforcing Steel Schedule.

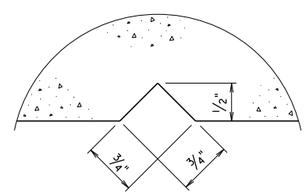

SECTION C-C

Full scale

Groove detail for both sides of rail

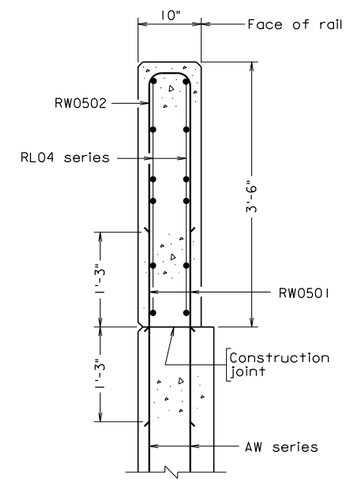

SECTION B-B

REINFORCING STEEL SCHEDULE

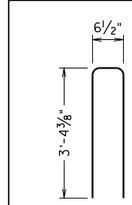

RW0502

Mark	Size	No.	Length	Pin ø	Location
RW0501	#5		2'-6"	—	Terminal wall and U-back wing
RW0502	#5		7'-0"	3¾"	Terminal wall and U-back wing
RL04	#4			—	Terminal wall and U-back wing

Dimensions in bending diagram are out-to-out of bars.

br27t1.dgn

12-14-2012

BR27T-1

Sealed and Signed by:
Julius F.J. Volgyi Jr.
Lic. No. 010487
On the date of
December 14, 2012

A copy of the original sealed and signed standard drawing is on file in the Central Office.

VDOT S&B DIVISION
RICHMOND, VA
STRUCTURAL ENGINEER

No.	Description	Date

Revisions

COMMONWEALTH OF VIRGINIA
DEPARTMENT OF TRANSPORTATION

STRUCTURE AND BRIDGE DIVISION

42" BR27C/BR27D TERMINAL WALL

Designed: S&B DIV
Drawn: S&B DIV
Checked: S&B DIV

Date

Plan No. BR27T-1

Sheet No.

Scale: 1" = 1'-0" unless otherwise noted.

© 2012, Commonwealth of Virginia

42”-BR27_ STEEL RAILING

BR27T-SERIES

TERMINAL WALL ON ABUTMENT U-BACK WING

NOTES TO DESIGNER:

The BR27_steel railing uses the BR27T-series for concrete terminal walls in conjunction with the BR27C or BR27D series.

This concrete terminal wall standard has a height of 3’-6” from the roadway surface.

Include this standard when using standard BR27C-12 or BR27D-8 and when terminal wall is detailed on abutment U-back wing.

It is the Contractor’s responsibility to determine the number of reinforcing bars required as well as any details or dimensions. Therefore, these items are to be left blank in the Reinforcing Steel Schedule.

AW series bars are included in abutment reinforcement.

ADD THE FOLLOWING NOTES, DIMENSIONS, DETAILS, ETC. TO STANDARD:

VIEW A-A:

For projects with bituminous overlay, modify vertical dimension 9” and the range (1’-9¾” min. – 1’-10¾” max.) for location of bolts and 3’-6” height of terminal wall so that these dimensions will be established from top of overlay surface.

SECTION B-B:

For projects with bituminous overlay, modify vertical dimension 3’-6” so that this dimension will be established from top of overlay surface.

NOTES:

Complete first note by adding the Class I, II or III of corrosion resistant reinforcing steel required. For additional information on corrosion resistant reinforcing steel (CRR), see Structure and Bridge Division Memorandum (current IIM-S&B-81).

Complete sheet no. for details and reinforcing steel schedule of steel railing.

42”-BR27_ STEEL RAILING

BR27T-SERIES

TERMINAL WALL ON ABUTMENT U-BACK WING

ADD THE FOLLOWING NOTES, DIMENSIONS, DETAILS, ETC. TO STANDARD: (cont’d)

REINFORCING STEEL SCHEDULE:

Add length for rebar RL04 series.

For projects with bituminous overlay bituminous, adjust dimension and length of rebar RW0502.

TITLE BLOCK:

Replace standard designation with Plan No.

STATE	FEDERAL AID ROUTE	FEDERAL AID PROJECT	STATE ROUTE	STATE PROJECT	SHEET NO.
VA.	—				

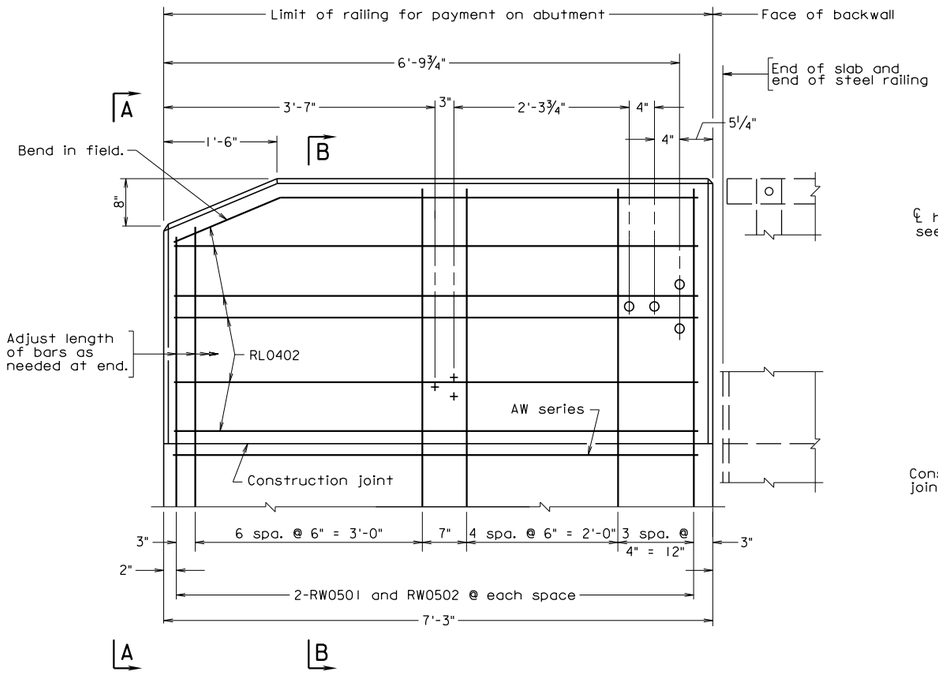

TERMINAL WALL - ELEVATION

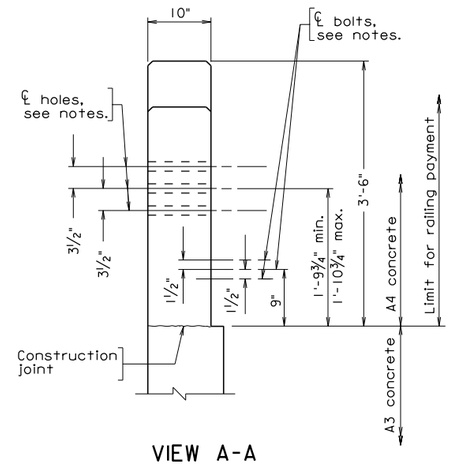

VIEW A-A

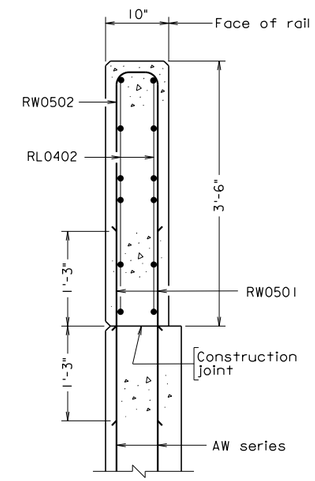

SECTION B-B

Notes:

All bevels for concrete on this sheet shall be ¾". Rounded edges with 1" radius may be used in lieu of bevels along top of rail.

All reinforcing bars shall be Corrosion Resistant Reinforcing Steel, Class __.

Each terminal wall shall be cast as one piece.

The Contractor shall determine all details necessary for installation.

All concrete shall be Class A4.

For details of wingwall below construction joint, see abutment sheets.

Terminal walls are detailed to take guardrail attachment GR-FOA-1.

Holes, where shown, shall be formed with sleeves of 1½" diameter nominal pipe.

Bolts for guardrail attachment where shown shall be ⅝" diameter expansion anchor bolts 6" long to be drilled and installed when rub rail is attached.

For details and reinforcing steel schedule of steel railing, see sheet __.

Bid item for terminal wall shall include concrete noted in plans and reinforcing steel indicated in Reinforcing Steel Schedule.

REINFORCING STEEL SCHEDULE

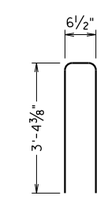

RW0502

Mark	Size	No.	Length	Pin ø	Location
RW0501	#5		2'-6"	—	Terminal wall
RW0502	#5		7'-0"	3¾"	Terminal wall
RL0402	#4		6'-11"	—	Terminal wall

Dimensions in bending diagram are out-to-out of bars.

br27t2.dgn

12-14-2012

BR27T-2

Sealed and Signed by:
Julius F.J. Volgyi Jr.
Lic. No. 010487
On the date of
December 14, 2012

A copy of the original sealed and signed standard drawing is on file in the Central Office.

VDOT S&B DIVISION
RICHMOND, VA
STRUCTURAL ENGINEER

Scale: 1" = 1'-0" unless otherwise noted.

©2012, Commonwealth of Virginia

No.	Description	Date

Revisions

COMMONWEALTH OF VIRGINIA
DEPARTMENT OF TRANSPORTATION

STRUCTURE AND BRIDGE DIVISION

42" BR27C/BR27D TERMINAL WALL

Designed: S&B..DIV
Drawn: ....S&B..DIV
Checked: S&B..DIV

Date

Plan No. BR27T-2

Sheet No.

42”-BR27_ STEEL RAILING

BR27T-SERIES

TERMINAL WALL ON ABUTMENT WINGWALL

NOTES TO DESIGNER:

The BR27_steel railing uses the BR27T-series for concrete terminal walls in conjunction with the BR27C or BR27D series.

This concrete terminal wall standard has a height of 3’-6” from the roadway surface.

Include this standard when using standard BR27C-12 or BR27D-8 and when terminal wall is detailed on abutment wingwall.

It is the Contractor’s responsibility to determine the number of reinforcing bars required as well as any details or dimensions. Therefore, these items are to be left blank in the Reinforcing Steel Schedule.

AW series bars are included in abutment reinforcement.

ADD THE FOLLOWING NOTES, DIMENSIONS, DETAILS, ETC. TO STANDARD:

ELEVATION:

Complete sheet no. for steel railing.

VIEW A-A:

For projects with bituminous overlay, modify vertical dimension 9” and the range (1’-9¾” min. – 1’-10¾” max.) for location of bolts and 3’-6” height of terminal wall so that these dimensions will be established from top of overlay surface.

SECTION B-B:

For projects with bituminous overlay, modify vertical dimension 3’-6” so that this dimension will be established from top of overlay surface.

NOTES:

Complete first note by adding the Class I, II or III of corrosion resistant reinforcing steel required. For additional information on corrosion resistant reinforcing steel (CRR), see Structure and Bridge Division Memorandum (current IIM-S&B-81).

Complete sheet no. for details and reinforcing steel schedule of steel railing.

42”-BR27_ STEEL RAILING

BR27T-SERIES

TERMINAL WALL ON ABUTMENT WINGWALL

ADD THE FOLLOWING NOTES, DIMENSIONS, DETAILS, ETC. TO STANDARD: (cont’d)

REINFORCING STEEL SCHEDULE:

For projects with bituminous overlay bituminous, adjust dimension and length of rebar RW0502.

TITLE BLOCK:

Replace standard designation with Plan No.

STATE	FEDERAL AID ROUTE	FEDERAL AID PROJECT	STATE ROUTE	STATE PROJECT	SHEET NO.
VA.	—				

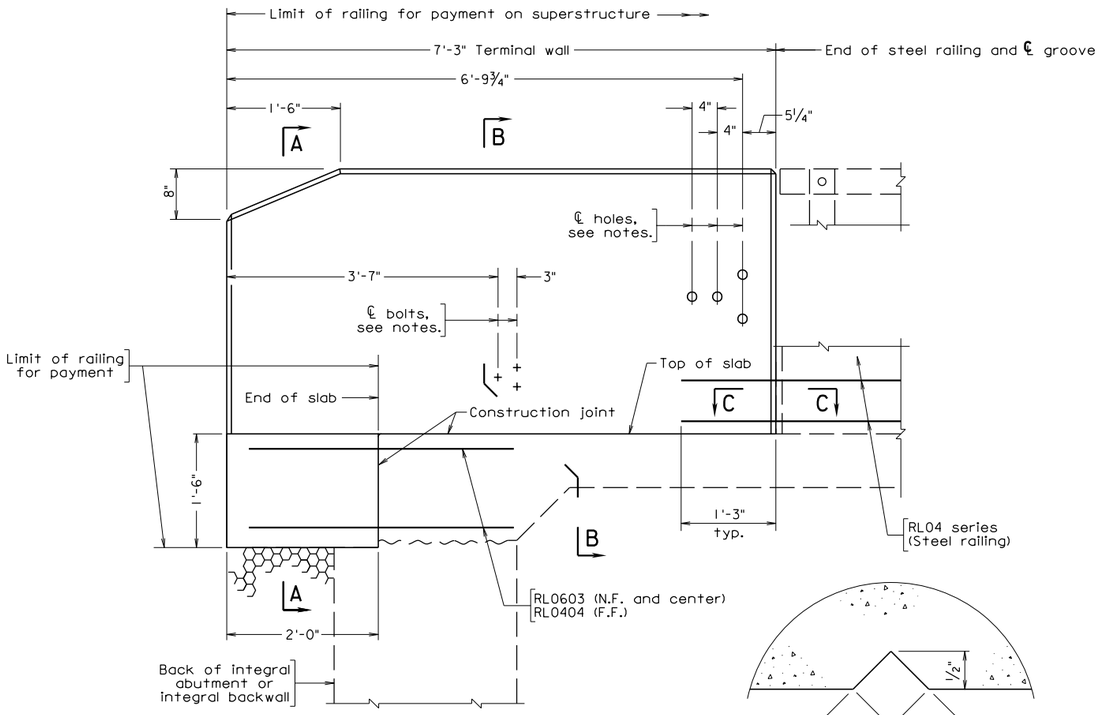

FULL INTEGRAL OR SEMI-INTEGRAL ABUTMENT

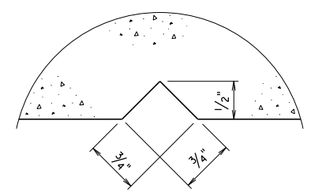

SECTION C-C

Full scale

Groove detail for both sides of rail

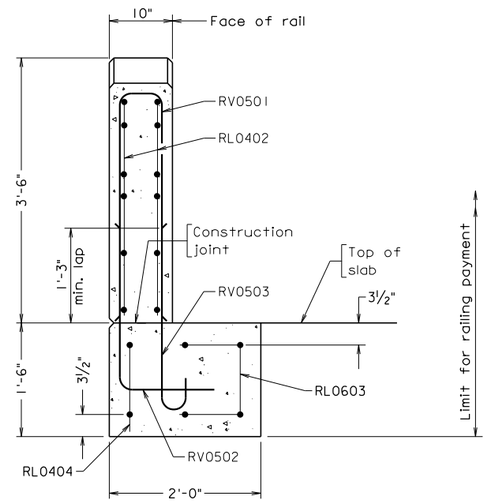

SECTION A-A

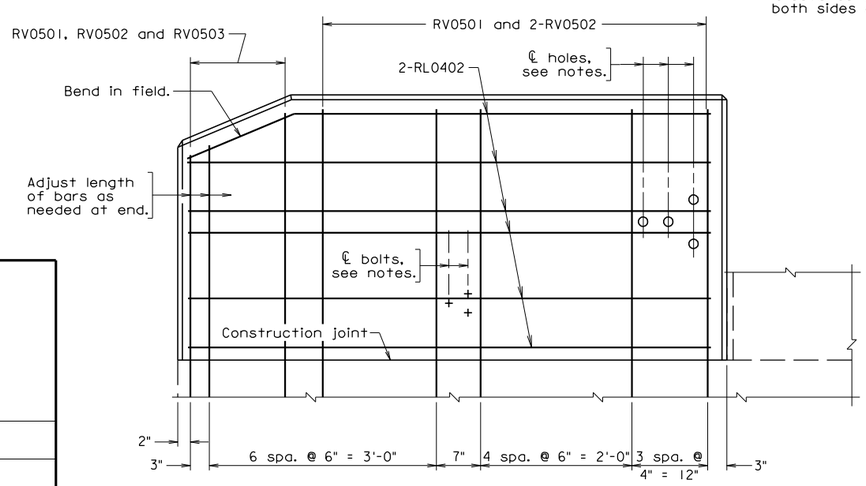

TERMINAL WALL

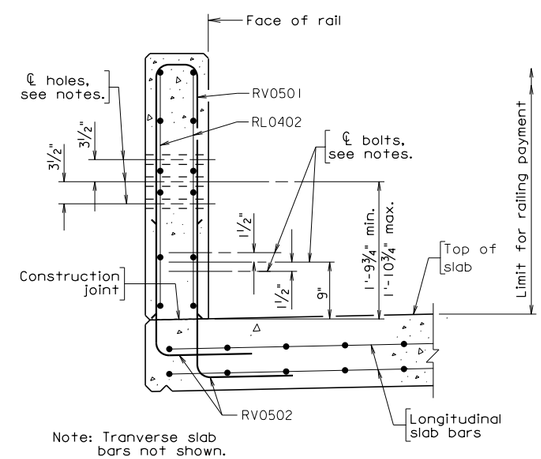

Note: Tranverse slab bars not shown.

SECTION B-B

Notes:

All bevels for concrete on this sheet shall be ¾". Rounded edges with 1" radius may be used in lieu of bevels along top of rail.

All reinforcing bars shall be Corrosion Resistant Reinforcing Steel, Class __.

Each terminal wall shall be cast as one piece.

The Contractor shall determine all details necessary for installation.

All concrete shall be Class A4.

For details of wingwall below construction joint, see abutment sheets.

Terminal walls are detailed to take guardrail attachment GR-FOA-1.

Holes, where shown, shall be formed with sleeves of 1½" diameter nominal pipe.

Bolts for guardrail attachment where shown shall be ⅝" diameter expansion anchor bolts 6" long to be drilled and installed when rub rail is attached.

For details and reinforcing steel schedule of steel railing, see sheet __.

Bid item for terminal wall shall include concrete noted in plans and reinforcing steel indicated in Reinforcing Steel Schedule.

REINFORCING STEEL SCHEDULE

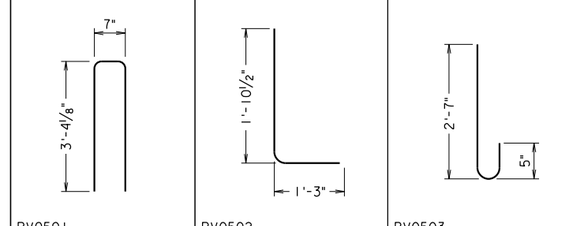

Mark	Size	No.	Pin ø	Length	Location
RL0402	#4		—	6'-11"	Terminal wall
RL0603	#6		—	4'-0"	Terminal wall end support
RL0404	#4		—	4'-0"	Terminal wall end support
RV0501	#5		3¾"	7'-0"	Terminal wall
RV0502	#5		3¾"	3'-0"	Terminal wall
RV0503	#5		3¾"	3'-2"	Terminal wall

Dimensions in bending diagram are out-to-out of bars, except as shown.

br27t3.dgn

12-14-2012

BR27T-3

Sealed and Signed by:
Julius F.J. Volgyi Jr.
Lic. No. 010487
On the date of
December 14, 2012

A copy of the original sealed and signed standard drawing is on file in the Central Office.

VDOT S&B DIVISION
RICHMOND, VA
STRUCTURAL ENGINEER

No.	Description	Date

Revisions

Scale: 1" = 1'-0" unless otherwise noted.

©2012, Commonwealth of Virginia

COMMONWEALTH OF VIRGINIA
DEPARTMENT OF TRANSPORTATION

STRUCTURE AND BRIDGE DIVISION

42" BR27C/BR27D TERMINAL WALL

Designed: S&B DIV
Drawn: S&B DIV
Checked: S&B DIV

Date

Plan No. BR27T-3

Sheet No.

42”-BR27_ STEEL RAILING

BR27T-SERIES

TERMINAL WALL ON SUPERSTRUCTURE WITH FULL INTEGRAL OR SEMI-INTEGRAL ABUTMENT

NOTES TO DESIGNER:

The BR27_steel railing uses the BR27T-series for concrete terminal walls in conjunction with the BR27C or BR27D series.

This concrete terminal wall standard has a height of 3’-6” from the roadway surface.

Include this standard when using standard BR27C-12 or BR27D-8 with terminal wall on superstructure with integral abutment.

Terminal wall is detailed on the deck slab of a superstructure with full integral or semi-integral abutment. A 2’-0” wide section at the edge of superstructure is extended 2’-0” from the end of deck slab to support the end of the terminal wall. This concrete section and the terminal wall shall be part of the steel railing for payment. The superstructure plan would need to be adjusted to reflect the slab extension at the corner of the end deck slab.

It is the Contractor’s responsibility to determine the number of reinforcing bars required as well as any details or dimensions. Therefore, these items are to be left blank in the Reinforcing Steel Schedule.

Transverse bars and longitudinal bars of the deck slab or slab span are included in the Superstructure Reinforcing Steel Schedule.

ADD THE FOLLOWING NOTES, DIMENSIONS, DETAILS, ETC. TO STANDARD:

SECTION A-A:

For projects with bituminous overlay, modify 3’-6” height of terminal wall so that this dimension will be established from top of overlay surface.

SECTION B-B:

For projects with bituminous overlay, modify vertical dimension 9” and the range (1’-9¾” min. – 1’-10¾” max.) for location of bolts so that these dimensions will be established from top of overlay surface.

42”-BR27_ STEEL RAILING

BR27T-SERIES

TERMINAL WALL ON SUPERSTRUCTURE WITH FULL INTEGRAL OR SEMI-INTEGRAL ABUTMENT

ADD THE FOLLOWING NOTES, DIMENSIONS, DETAILS, ETC. TO STANDARD: (cont’d)

NOTES:

Complete first note by adding the Class I, II or III of corrosion resistant reinforcing steel required. For additional information on corrosion resistant reinforcing steel (CRR), see Structure and Bridge Division Memorandum (current IIM-S&B-81).

Complete sheet no. for details of integral abutment.

Complete sheet no. for details and reinforcing steel schedule of steel railing.

TITLE BLOCK:

Replace standard designation with Plan No.

STATE	FEDERAL AID ROUTE	FEDERAL AID PROJECT	STATE ROUTE	STATE PROJECT	SHEET NO.
VA.	—				

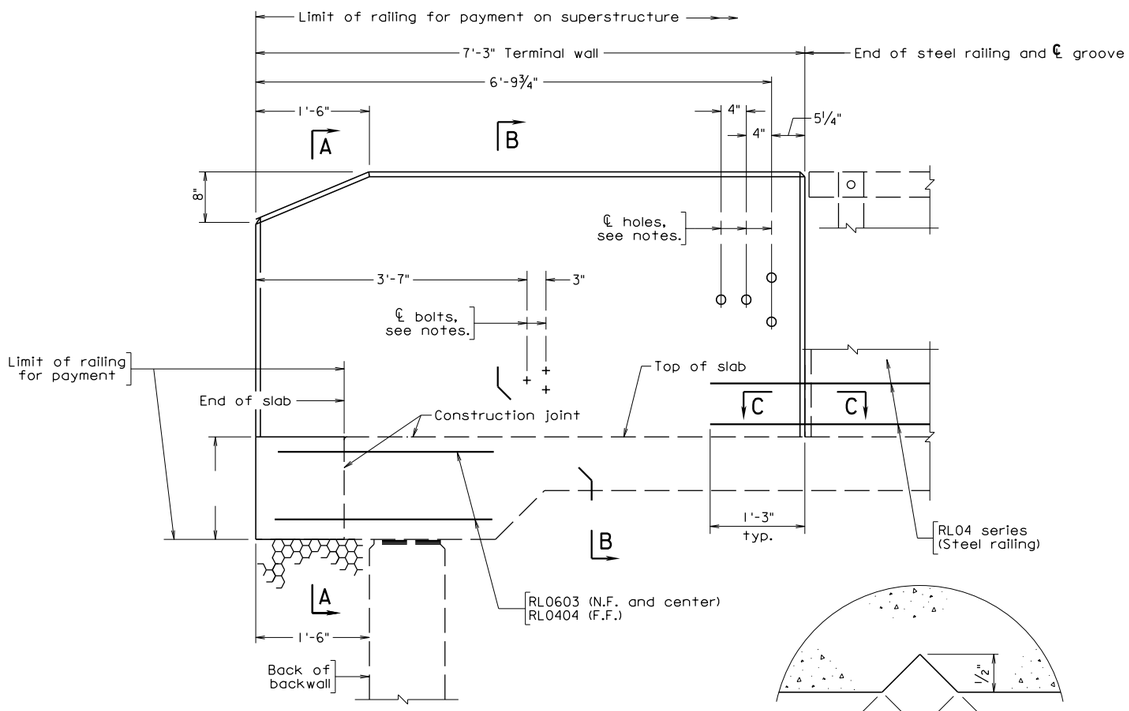

DECK SLAB EXTENSION ABUTMENT

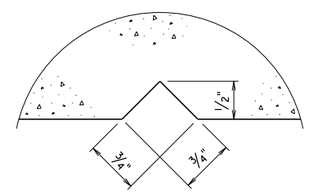

SECTION C-C

Full scale

Groove detail for both sides of rail

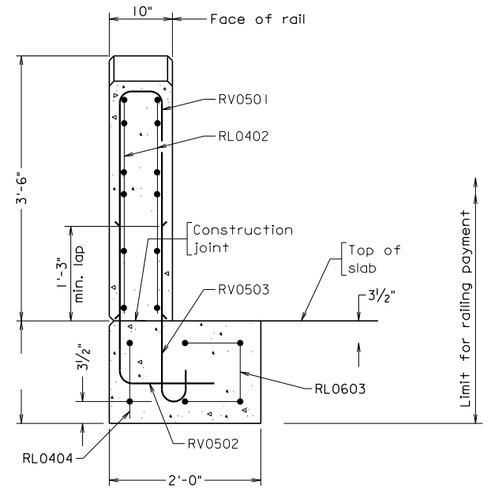

SECTION A-A

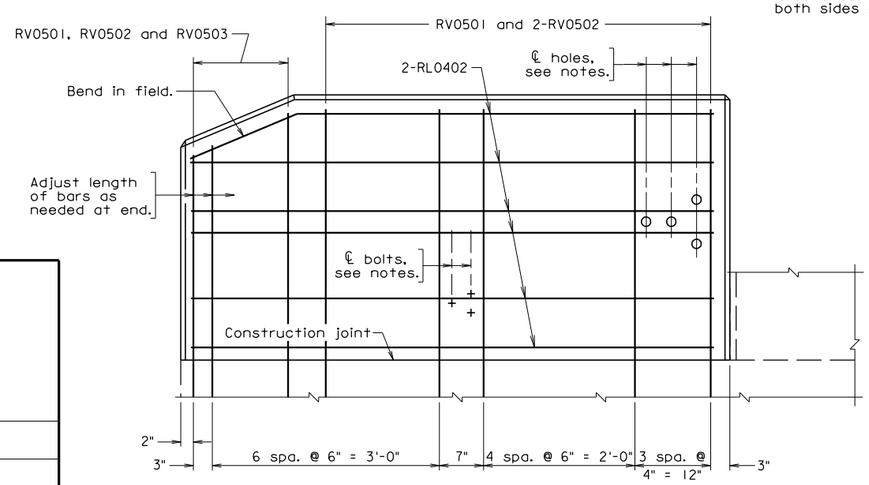

TERMINAL WALL

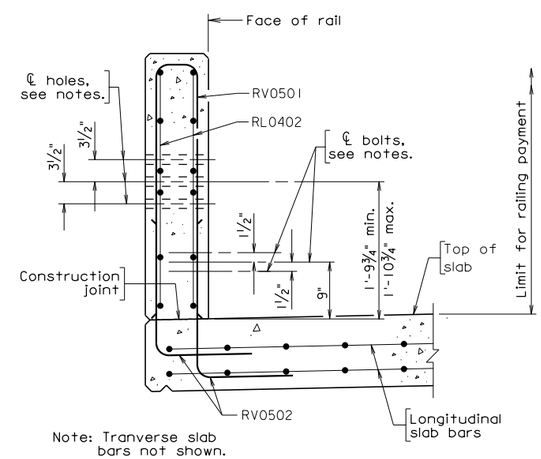

Note: Tranverse slab bars not shown.

SECTION B-B

Notes:

All bevels for concrete on this sheet shall be ¾". Rounded edges with 1" radius may be used in lieu of bevels along top of rail.

All reinforcing bars shall be Corrosion Resistant Reinforcing Steel, Class __.

Each terminal wall shall be cast as one piece.

The Contractor shall determine all details necessary for installation.

All concrete shall be Class A4.

For details of wingwall below construction joint, see abutment sheets.

Terminal walls are detailed to take guardrail attachment GR-FOA-1.

Holes, where shown, shall be formed with sleeves of 1½" diameter nominal pipe.

Bolts for guardrail attachment where shown shall be ⅝" diameter expansion anchor bolts 6" long to be drilled and installed when rub rail is attached.

For details and reinforcing steel schedule of steel railing, see sheet __.

Bid item for terminal wall shall include concrete noted in plans and reinforcing steel indicated in Reinforcing Steel Schedule.

REINFORCING STEEL SCHEDULE

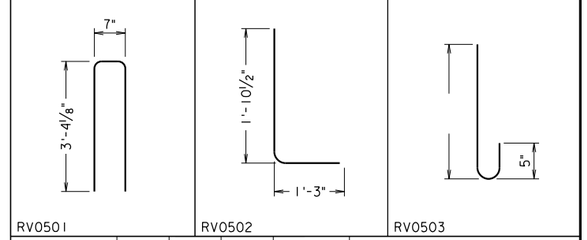

Mark	Size	No.	Pin ø	Length	Location
RL0402	#4		—	6'-11"	Terminal wall
RL0603	#6		—	4'-0"	Terminal wall end support
RL0404	#4		—	4'-0"	Terminal wall end support
RV0501	#5		3¾"	7'-0"	Terminal wall
RV0502	#5		3¾"	3'-0"	Terminal wall
RV0503	#5		3¾"		Terminal wall

Dimensions in bending diagram are out-to-out of bars, except as shown.

br27t4.dgn

12-14-2012

BR27T-4

Sealed and Signed by: Julius F.J. Volgyi Jr. Lic. No. 010487 On the date of December 14, 2012

A copy of the original sealed and signed standard drawing is on file in the Central Office.

VDOT S&B DIVISION RICHMOND, VA STRUCTURAL ENGINEER

No.	Description	Date
	Revisions	

COMMONWEALTH OF VIRGINIA
DEPARTMENT OF TRANSPORTATION

STRUCTURE AND BRIDGE DIVISION

42" BR27C/BR27D TERMINAL WALL

Designed: S&B DIV
Drawn: S&B DIV
Checked: S&B DIV

Date

Plan No. BR27T-4

Sheet No.

Scale: 1" = 1'-0" unless otherwise noted.

©2012, Commonwealth of Virginia

42”-BR27_ STEEL RAILING

BR27T-SERIES

TERMINAL WALL ON SUPERSTRUCTURE WITH DECK SLAB EXTENSION

NOTES TO DESIGNER:

The BR27_steel railing uses the BR27T-series for concrete terminal walls in conjunction with the BR27C or BR27D series.

This concrete terminal wall standard has a height of 3’-6” from the roadway surface.

Include this standard when using standard BR27C-12 or BR27D-8 with terminal wall on superstructure with deck slab extension.

Terminal wall is detailed on the deck slab extension of a superstructure or a slab span. A 2’-0” wide section at the edge of superstructure is extended further from the end of deck slab to an overall distance of 1’-6” from the end of the terminal wall to the back of the abutment backwall. This extended concrete section and the terminal wall shall be part of the steel railing for payment. The superstructure plan would need to be adjusted to reflect the slab extension at the corner of the end deck slab.

It is the Contractor’s responsibility to determine the number of reinforcing bars required as well as any details or dimensions. Therefore, these items are to be left blank in the Reinforcing Steel Schedule.

Transverse bars and longitudinal bars of the deck slab or slab span are included in the Superstructure Reinforcing Steel Schedule.

ADD THE FOLLOWING NOTES, DIMENSIONS, DETAILS, ETC. TO STANDARD:

ELEVATION:

Provide dimension for terminal wall end support.

SECTION A-A:

For projects with bituminous overlay, modify 3’-6” height of terminal wall so that this dimension will be established from top of overlay surface.

Provide dimension for terminal wall end support.

SECTION B-B:

For projects with bituminous overlay, modify vertical dimension 9” and the range (1’-9¾” min. – 1’-10¾” max.) for location of bolts so that these dimensions will be established from top of overlay surface.

42”-BR27_ STEEL RAILING

BR27T-SERIES

TERMINAL WALL ON SUPERSTRUCTURE WITH DECK SLAB EXTENSION

ADD THE FOLLOWING NOTES, DIMENSIONS, DETAILS, ETC. TO STANDARD: (cont’d)

NOTES:

Complete first note by adding the Class I, II or III of corrosion resistant reinforcing steel required. For additional information on corrosion resistant reinforcing steel (CRR), see Structure and Bridge Division Memorandum (current IIM-S&B-81).

Complete sheet no. for details of deck slab extension.

Complete sheet no. for details and reinforcing steel schedule of steel railing.

REINFORCING STEEL SCHEDULE:

Add dimension and length for rebar RV0503.

TITLE BLOCK:

Replace standard designation with Plan No.

STATE	FEDERAL AID ROUTE	FEDERAL AID PROJECT	STATE ROUTE	STATE PROJECT	SHEET NO.
VA.	—				

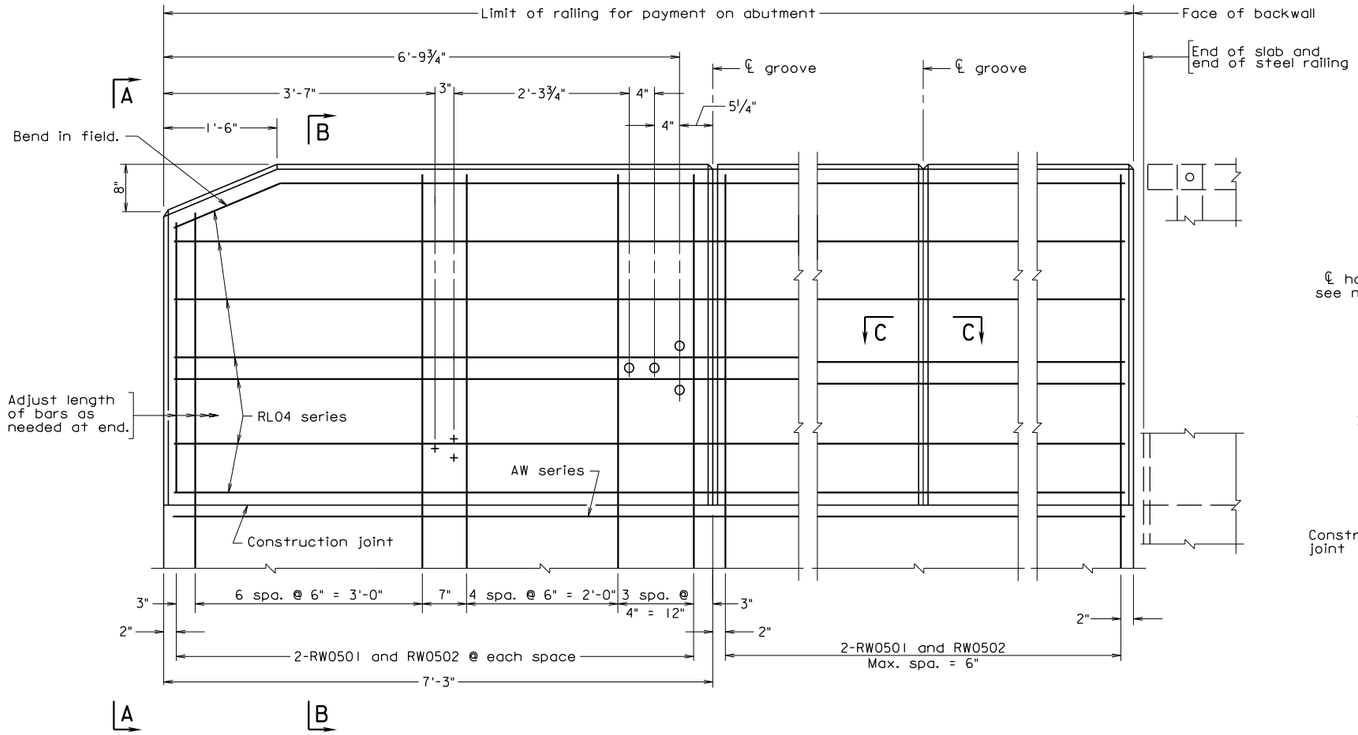

TERMINAL WALL U-BACK WING

ELEVATION

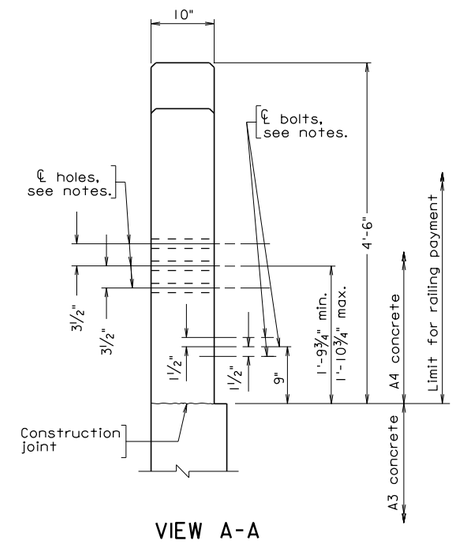

VIEW A-A

Notes:

All bevels for concrete on this sheet shall be ¾". Rounded edges with 1" radius may be used in lieu of bevels along top of rail.

All reinforcing bars shall be Corrosion Resistant Reinforcing Steel, Class __.

Each terminal wall shall be cast as one piece.

The Contractor shall determine all details necessary for installation.

All concrete shall be Class A4.

For details of wingwall below construction joint, see abutment sheets.

Terminal walls are detailed to take guardrail attachment GR-FOA-1.

Holes, where shown, shall be formed with sleeves of 1½" diameter nominal pipe.

Bolts for guardrail attachment where shown shall be ⅝" diameter expansion anchor bolts 6" long to be drilled and installed when rub rail is attached.

For details and reinforcing steel schedule of steel railing, see sheet __.

Bid item for terminal wall shall include concrete noted in plans and reinforcing steel indicated in Reinforcing Steel Schedule.

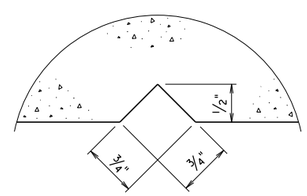

SECTION C-C

Full scale

Groove detail for both sides of rail

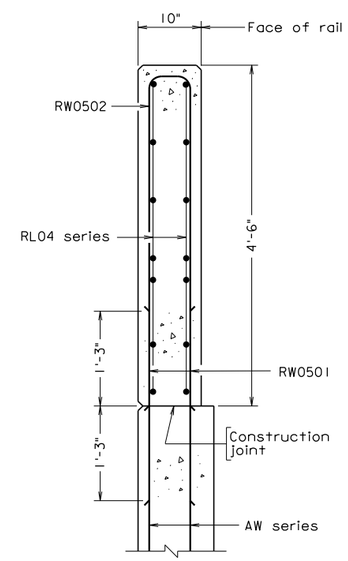

SECTION B-B

REINFORCING STEEL SCHEDULE

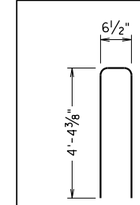

RW0502

Mark	Size	No.	Length	Pin ø	Location
RW0501	#5		2'-6"	—	Terminal wall and U-back wing
RW0502	#5		9'-0"	3¾"	Terminal wall and U-back wing
RL04	#4			—	Terminal wall and U-back wing

Dimensions in bending diagram are out-to-out of bars.

br27t5.dgn

12-14-2012

BR27T-5

Sealed and Signed by: Julius F.J. Volgyi Jr. Lic. No. 010487 On the date of December 14, 2012

A copy of the original sealed and signed standard drawing is on file in the Central Office.

VDOT S&B DIVISION RICHMOND, VA STRUCTURAL ENGINEER

No.	Description	Date

Revisions

COMMONWEALTH OF VIRGINIA
DEPARTMENT OF TRANSPORTATION

STRUCTURE AND BRIDGE DIVISION

54" BR27C/BR27D TERMINAL WALL

Designed: S&B DIV
Drawn: S&B DIV
Checked: S&B DIV

Date

Plan No. BR27T-5

Sheet No.

Scale: 1" = 1'-0" unless otherwise noted.

© 2012, Commonwealth of Virginia

54”-BR27_ STEEL RAILING

BR27T-SERIES

TERMINAL WALL ON ABUTMENT U-BACK WING

NOTES TO DESIGNER:

The BR27_steel railing uses the BR27T-series for concrete terminal walls in conjunction with the BR27C or BR27D series.

This concrete terminal wall standard has a height of 4’-6” from the roadway surface.

Include this standard when using standard BR27C-14, BR27C-15 or BR27D-10 and when terminal wall is detailed on abutment U-back wing. This standard, without the details and notes for guardrail attachment, may be included with BR27C-13 and BR27D-9 when used in conjunction with an inside traffic barrier to provide a shared use path (SUP). For geometrics of SUP, see Office Practice, Vol. V-Part 2, Chapter 6, sheets 4-10 to 4-16.

It is the Contractor’s responsibility to determine the number of reinforcing bars required as well as any details or dimensions. Therefore, these items are to be left blank in the Reinforcing Steel Schedule.

AW series bars are included in abutment reinforcement.

ADD THE FOLLOWING NOTES, DIMENSIONS, DETAILS, ETC. TO STANDARD:

VIEW A-A:

For projects with bituminous overlay, modify vertical dimension 9” and the range (1’-9¾” min. – 1’-10¾” max.) for location of bolts and 4’-6” height of terminal wall so that these dimensions will be established from top of overlay surface.

SECTION B-B:

For projects with bituminous overlay, modify vertical dimension 4’-6” so that this dimension will be established from top of overlay surface.

NOTES:

Complete first note by adding the Class I, II or III of corrosion resistant reinforcing steel required. For additional information on corrosion resistant reinforcing steels (CRR), see Structure and Bridge Division Memorandum (current IIM-S&B-81).

Complete sheet no. for details and reinforcing steel schedule of steel railing.

54'-BR27_ STEEL RAILING

BR27T-SERIES

TERMINAL WALL ON ABUTMENT U-BACK WING

ADD THE FOLLOWING NOTES, DIMENSIONS, DETAILS, ETC. TO STANDARD: (cont'd)

REINFORCING STEEL SCHEDULE:

Add length for rebar RL04 series.

For projects with bituminous overlay bituminous, adjust dimension and length of rebar RW0502.

TITLE BLOCK:

Replace standard designation with Plan No.

STATE	FEDERAL AID ROUTE	FEDERAL AID PROJECT	STATE ROUTE	STATE PROJECT	SHEET NO.
VA.	—				

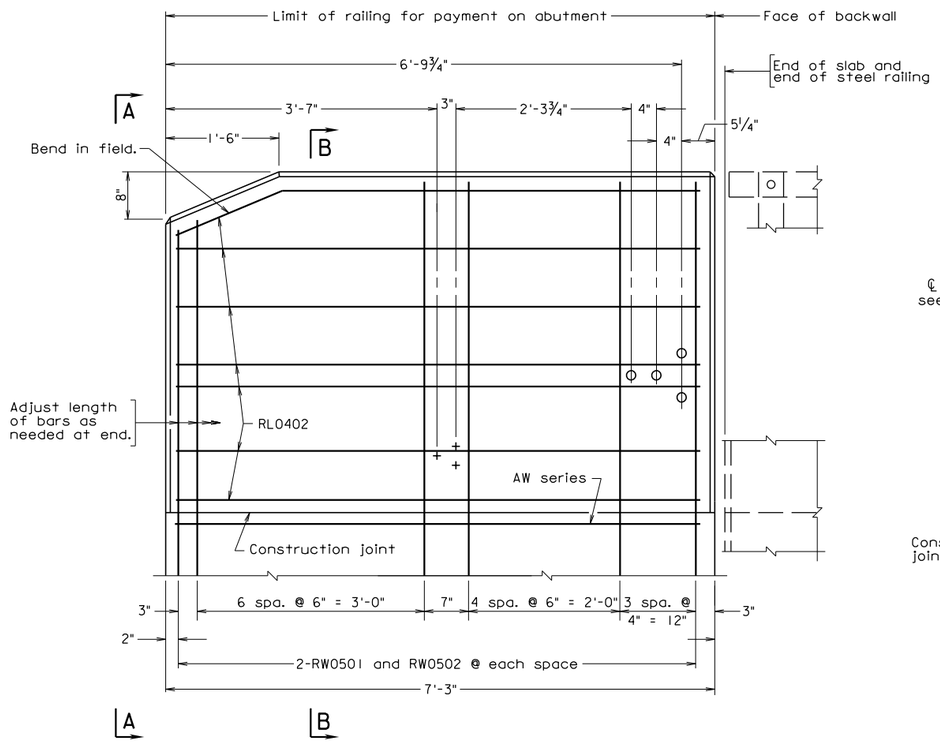

TERMINAL WALL - ELEVATION

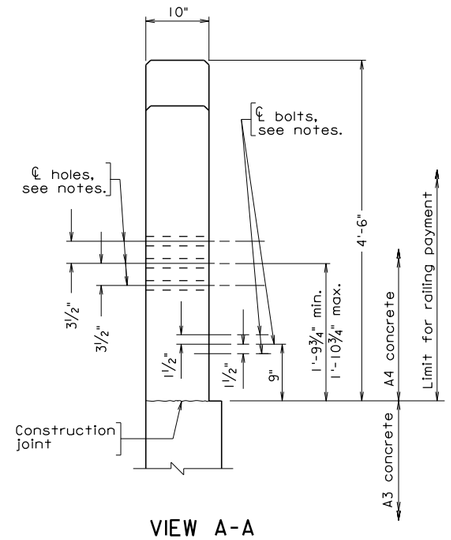

VIEW A-A

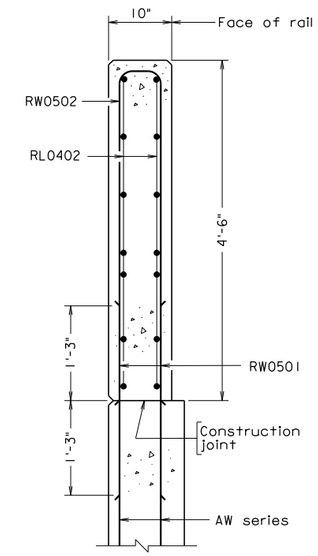

SECTION B-B

Notes:

All bevels for concrete on this sheet shall be ¾". Rounded edges with 1" radius may be used in lieu of bevels along top of rail.

All reinforcing bars shall be Corrosion Resistant Reinforcing Steel, Class __.

Each terminal wall shall be cast as one piece.

The Contractor shall determine all details necessary for installation.

All concrete shall be Class A4.

For details of wingwall below construction joint, see abutment sheets.

Terminal walls are detailed to take guardrail attachment GR-FOA-1.

Holes, where shown, shall be formed with sleeves of 1½" diameter nominal pipe.

Bolts for guardrail attachment where shown shall be ⅝" diameter expansion anchor bolts 6" long to be drilled and installed when rub rail is attached.

For details and reinforcing steel schedule of steel railing, see sheet __.

Bid item for terminal wall shall include concrete noted in plans and reinforcing steel indicated in Reinforcing Steel Schedule.

REINFORCING STEEL SCHEDULE

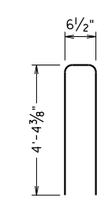

RW0502

Mark	Size	No.	Length	Pin ø	Location
RW0501	#5		2'-6"	—	Terminal wall
RW0502	#5		9'-0"	3¾"	Terminal wall
RL0402	#4		6'-11"	—	Terminal wall

Dimensions in bending diagram are out-to-out of bars.

br27t6.dgn

12-14-2012

BR27T-6

Sealed and Signed by:
Julius F.J. Volgyi Jr.
Lic. No. 010487
On the date of
December 14, 2012

A copy of the original sealed and signed standard drawing is on file in the Central Office.

VDOT S&B DIVISION
RICHMOND, VA
STRUCTURAL ENGINEER

No.	Description	Date

Revisions

COMMONWEALTH OF VIRGINIA
DEPARTMENT OF TRANSPORTATION

STRUCTURE AND BRIDGE DIVISION

54" BR27C/BR27D TERMINAL WALL

Designed: S&B DIV
Drawn: S&B DIV
Checked: S&B DIV

Date

Plan No. BR27T-6

Sheet No.

Scale: 1" = 1'-0" unless otherwise noted.

© 2012, Commonwealth of Virginia

BR27_ STEEL RAILING
BR27T-SERIES

TERMINAL WALL ON ABUTMENT WINGWALL

NOTES TO DESIGNER:

The BR27_steel railing uses the BR27T-series for concrete terminal walls in conjunction with the BR27C or BR27D series. Miscellaneous steel rail connections and fabricator's note used in the BR27C and BR27D series are also shown in the BR27T-series.

This concrete terminal wall standard has a height of 4'-6" from the roadway surface.

Include this standard when using standard BR27C-14, BR27C-15 or BR27D-10 and when terminal wall is detailed on abutment wingwall. This standard, without the details and notes for guardrail attachment, may be included with BR27C-13 and BR27D-9 when used in conjunction with an inside traffic barrier to provide a shared use path (SUP). For geometrics of SUP, see Office Practice, Vol. V-Part 2, Chapter 6, sheets 4-10 to 4-16.

It is the Contractor's responsibility to determine the number of reinforcing bars required as well as any details or dimensions. Therefore, these items are to be left blank in the Reinforcing Steel Schedule.

AW series bars are included in abutment reinforcement.

ADD THE FOLLOWING NOTES, DIMENSIONS, DETAILS, ETC. TO STANDARD:

VIEW A-A:

For projects with bituminous overlay, modify vertical dimension 9" and the range (1'-9¾" min. – 1'-10¾" max.) for location of bolts and 4'-6" height of terminal wall so that these dimensions will be established from top of overlay surface.

SECTION B-B:

For projects with bituminous overlay, modify vertical dimension 4'-6" so that this dimension will be established from top of overlay surface.

NOTES:

Complete first note by adding the Class I, II or III of corrosion resistant reinforcing steel required. For additional information on corrosion resistant reinforcing steels (CRR), see Structure and Bridge Division Memorandum (current IIM-S&B-81).

Complete sheet no. for details and reinforcing steel schedule of steel railing.

BR27_ STEEL RAILING
BR27T-SERIES

TERMINAL WALL ON ABUTMENT WINGWALL

ADD THE FOLLOWING NOTES, DIMENSIONS, DETAILS, ETC. TO STANDARD: (cont'd)

REINFORCING STEEL SCHEDULE:

For projects with bituminous overlay bituminous, adjust dimension and length of rebar RW0502.

TITLE BLOCK:

Replace standard designation with Plan No.

STATE	FEDERAL AID ROUTE	FEDERAL AID PROJECT	STATE ROUTE	STATE PROJECT	SHEET NO.
VA.	—				

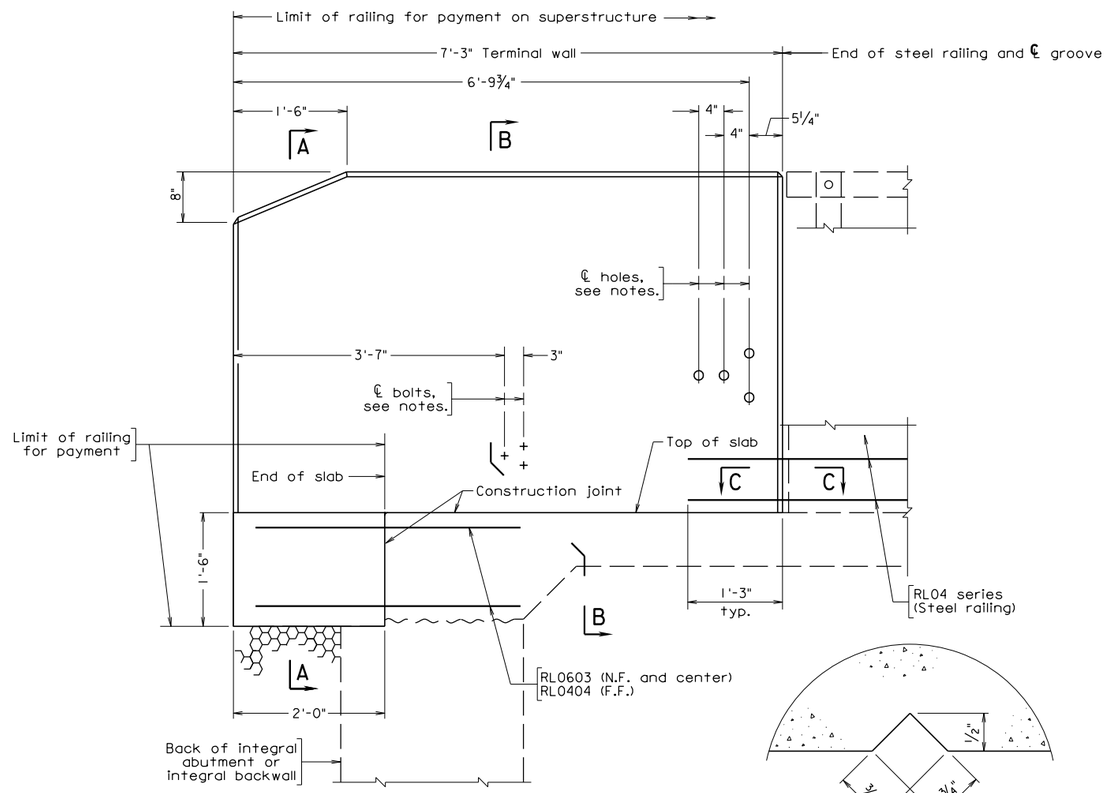

FULL INTEGRAL OR SEMI-INTEGRAL ABUTMENT

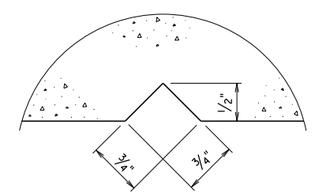

SECTION C-C

Full scale

Groove detail for both sides of rail

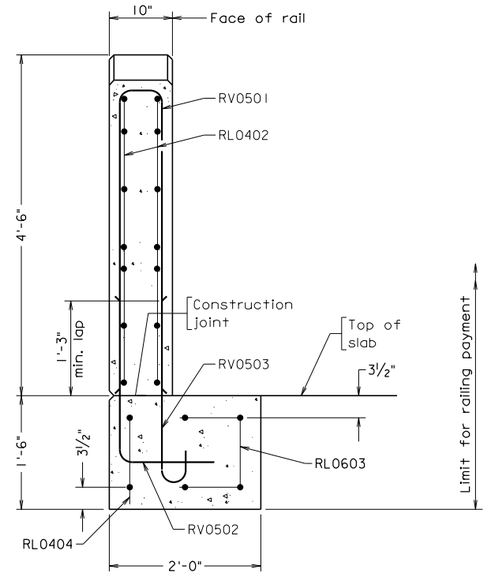

SECTION A-A

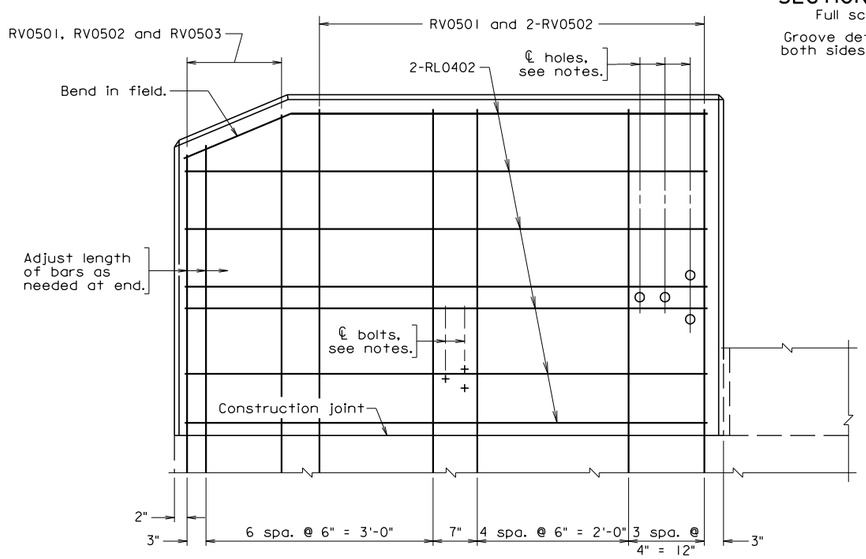

TERMINAL WALL

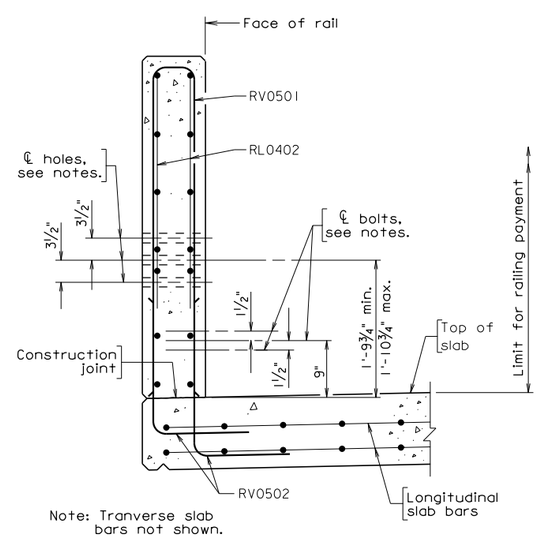

Note: Tranverse slab bars not shown.

SECTION B-B

Notes:

All bevels for concrete on this sheet shall be ¾". Rounded edges with 1" radius may be used in lieu of bevels along top of rail.

All reinforcing bars shall be Corrosion Resistant Reinforcing Steel, Class __.

Each terminal wall shall be cast as one piece.

The Contractor shall determine all details necessary for installation.

All concrete shall be Class A4.

For details of wingwall below construction joint, see abutment sheets.

Terminal walls are detailed to take guardrail attachment GR-FOA-1.

Holes, where shown, shall be formed with sleeves of 1½" diameter nominal pipe.

Bolts for guardrail attachment where shown shall be ⅝" diameter expansion anchor bolts 6" long to be drilled and installed when rub rail is attached.

For details and reinforcing steel schedule of steel railing, see sheet __.

Bid item for terminal wall shall include concrete noted in plans and reinforcing steel indicated in Reinforcing Steel Schedule.

REINFORCING STEEL SCHEDULE

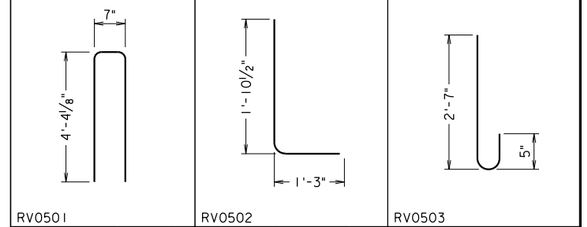

Mark	Size	No.	Pin ø	Length	Location
RL0402	#4		—	6'-11"	Terminal wall
RL0603	#6		—	4'-0"	Terminal wall end support
RL0404	#4		—	4'-0"	Terminal wall end support
RV0501	#5		3¾"	9'-0"	Terminal wall
RV0502	#5		3¾"	3'-0"	Terminal wall
RV0503	#5		3¾"	3'-2"	Terminal wall

Dimensions in bending diagram are out-to-out of bars, except as shown.

Scale: 1" = 1'-0" unless otherwise noted.

©2012, Commonwealth of Virginia

No.	Description	Date

Revisions

COMMONWEALTH OF VIRGINIA
DEPARTMENT OF TRANSPORTATION

STRUCTURE AND BRIDGE DIVISION

54" BR27C/BR27D TERMINAL WALL

Designed: S&B DIV
Drawn: S&B DIV
Checked: S&B DIV

Date

Plan No. BR27T-7

Sheet No.

12-14-2012

br27t7.dgn

Sealed and Signed by:
Julius F.J. Volgyi Jr.
Lic. No. 010487
On the date of
December 14, 2012

A copy of the original sealed and signed standard drawing is on file in the Central Office.

VDOT S&B DIVISION
RICHMOND, VA
STRUCTURAL ENGINEER

BR27T-7

54”-BR27_ STEEL RAILING

BR27T-SERIES

TERMINAL WALL ON SUPERSTRUCTURE WITH FULL INTEGRAL OR SEMI-INTEGRAL ABUTMENT

NOTES TO DESIGNER:

The BR27_steel railing uses the BR27T-series for concrete terminal walls in conjunction with the BR27C or BR27D series.

This concrete terminal wall standard has a height of 4’-6” from the roadway surface.

Include this standard when using standard BR27C series (B27C-13 thru BR27C-15) or BR27D series (BR27D-9 and BR27D-10) with terminal wall on superstructure with integral abutment.

Terminal wall is detailed on the deck slab of a superstructure with full integral or semi-integral abutment. A 2’-0” wide section on inside of superstructure (for BR27C-13 and BR27D-9) or at the edge of superstructure (for BR27C-14, BR27C-15 and BR27D-10) is extended 2’-0” from the end of deck slab to support the end of the terminal wall. This concrete section and the terminal wall shall be part of the steel railing for payment. The superstructure plan would need to be adjusted to reflect the location of the slab extension at the end of the deck slab. This standard may be modified by omitting the details and notes for guardrail attachment when used as an on outside of structure in conjunction with an inside traffic barrier for the shared use path (SUP). For geometrics of SUP, see Office Practice, Vol. V-Part 2, Chapter 6, sheets 4-10 to 4-16.

It is the Contractor’s responsibility to determine the number of reinforcing bars required as well as any details or dimensions. Therefore, these items are to be left blank in the Reinforcing Steel Schedule.

Transverse bars and longitudinal bars of the deck slab or slab span are included in the Superstructure Reinforcing Steel Schedule.

ADD THE FOLLOWING NOTES, DIMENSIONS, DETAILS, ETC. TO STANDARD:

SECTION A-A:

For projects with bituminous overlay, modify 4’-6” height of terminal wall so that this dimension will be established from top of overlay surface.

SECTION B-B:

For projects with bituminous overlay, modify vertical dimension 9” and the range (1’-9¾” min. – 1’- 10¾” max.) for location of bolts so that these dimensions will be established from top of overlay surface.

54”-BR27_ STEEL RAILING

BR27T-SERIES

TERMINAL WALL ON SUPERSTRUCTURE WITH FULL INTEGRAL OR SEMI-INTEGRAL ABUTMENT

ADD THE FOLLOWING NOTES, DIMENSIONS, DETAILS, ETC. TO STANDARD: (cont’d)

NOTES:

Complete first note by adding the Class I, II or III of corrosion resistant reinforcing steel required. For additional information on corrosion resistant reinforcing steels (CRR), see Structure and Bridge Division Memorandum (current IIM-S&B-81).

Complete sheet no. for details of integral abutment.

Complete sheet no. for details and reinforcing steel schedule of steel railing.

TITLE BLOCK:

Replace standard designation with Plan No.

STATE	FEDERAL AID ROUTE	FEDERAL AID PROJECT	STATE ROUTE	STATE PROJECT	SHEET NO.
VA.	—				

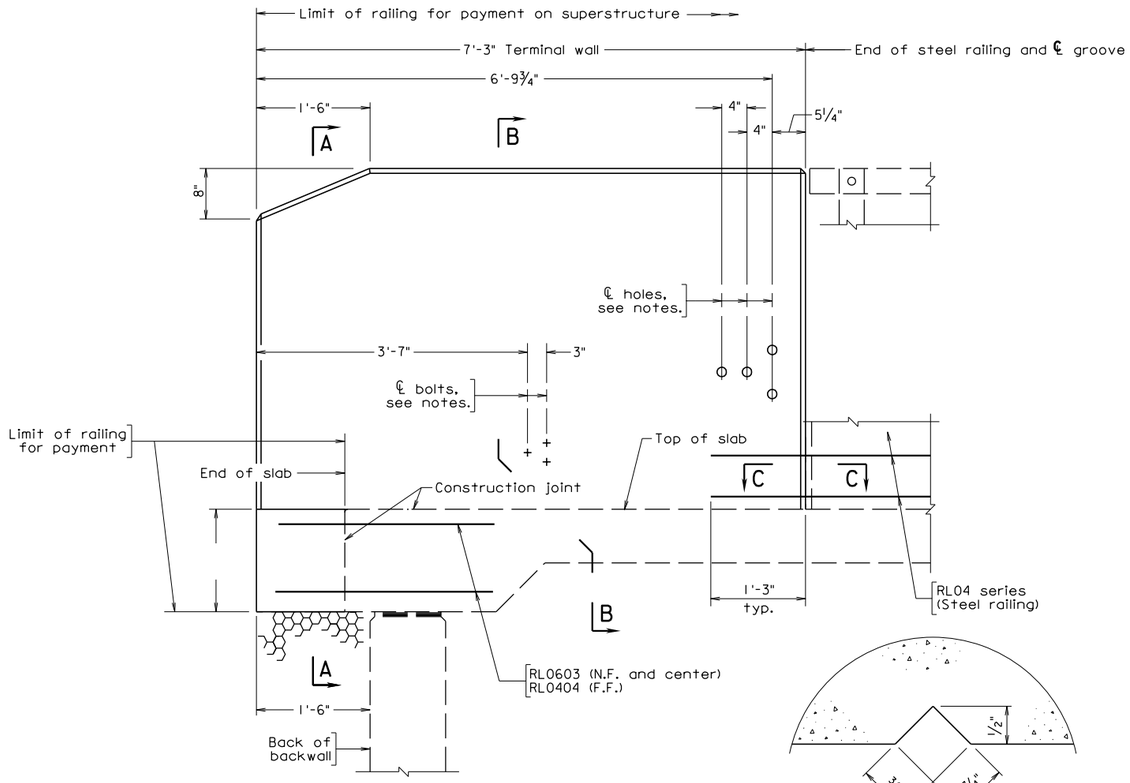

DECK SLAB EXTENSION ABUTMENT

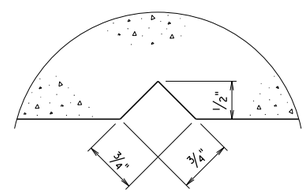

SECTION C-C

Full scale

Groove detail for both sides of rail

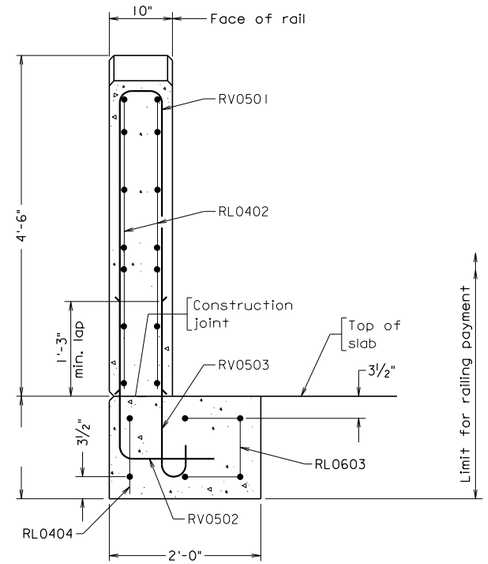

SECTION A-A

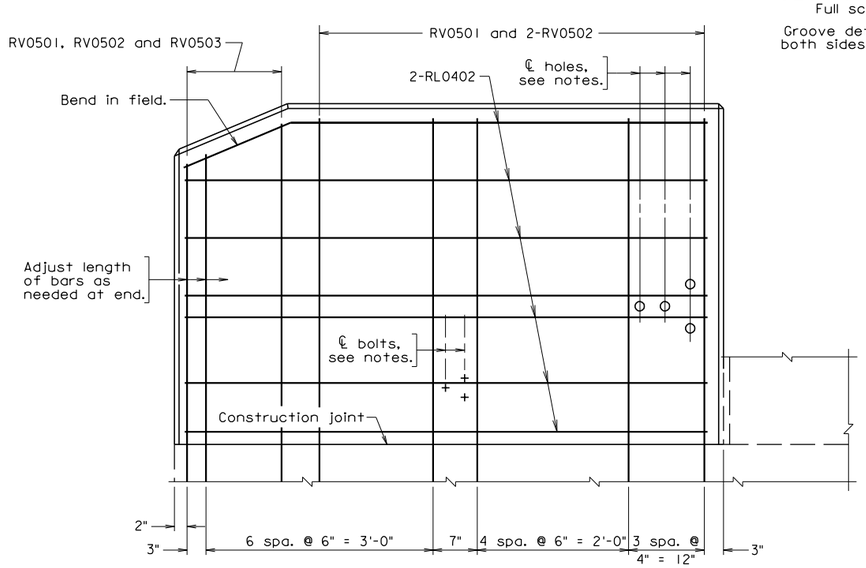

TERMINAL WALL

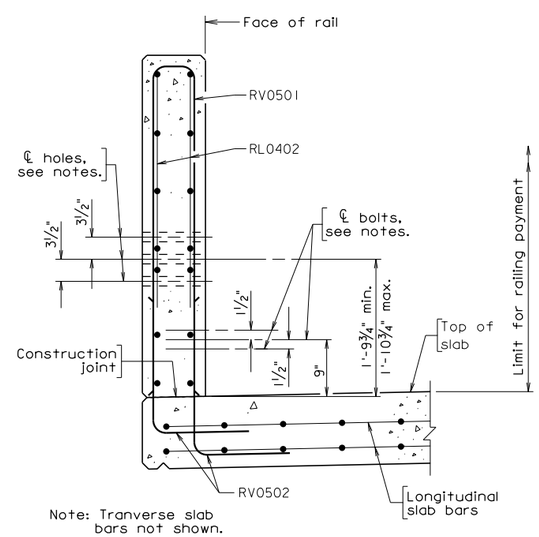

Note: Tranverse slab bars not shown.

SECTION B-B

Notes:

All bevels for concrete on this sheet shall be ¾". Rounded edges with 1" radius may be used in lieu of bevels along top of rail.

All reinforcing bars shall be Corrosion Resistant Reinforcing Steel, Class __.

Each terminal wall shall be cast as one piece.

The Contractor shall determine all details necessary for installation.

All concrete shall be Class A4.

For details of wingwall below construction joint, see abutment sheets.

Terminal walls are detailed to take guardrail attachment GR-FOA-1.

Holes, where shown, shall be formed with sleeves of 1½" diameter nominal pipe.

Bolts for guardrail attachment where shown shall be ⅝" diameter expansion anchor bolts 6" long to be drilled and installed when rub rail is attached.

For details and reinforcing steel schedule of steel railing, see sheet __.

Bid item for terminal wall shall include concrete noted in plans and reinforcing steel indicated in Reinforcing Steel Schedule.

REINFORCING STEEL SCHEDULE

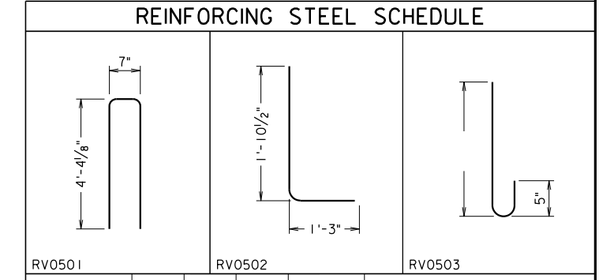

Mark	Size	No.	Pin ø	Length	Location
RL0402	#4		—	6'-11"	Terminal wall
RL0603	#6		—	4'-0"	Terminal wall end support
RL0404	#4		—	4'-0"	Terminal wall end support
RV0501	#5		3¾"	9'-0"	Terminal wall
RV0502	#5		3¾"	3'-0"	Terminal wall
RV0503	#5		3¾"		Terminal wall

Dimensions in bending diagram are out-to-out of bars, except as shown.

br27t8.dgn

12-14-2012

BR27T-8

Sealed and Signed by: Julius F.J. Volgyi Jr. Lic. No. 010487 On the date of December 14, 2012

A copy of the original sealed and signed standard drawing is on file in the Central Office.

VDOT S&B DIVISION RICHMOND, VA STRUCTURAL ENGINEER

No.	Description	Date
	Revisions	

COMMONWEALTH OF VIRGINIA
DEPARTMENT OF TRANSPORTATION

STRUCTURE AND BRIDGE DIVISION

54" BR27C/BR27D TERMINAL WALL

Designed: S&B..DIV
Drawn: ....S&B..DIV
Checked: S&B..DIV

Date

Plan No. BR27T-8

Sheet No.

Scale: 1" = 1'-0" unless otherwise noted.

©2012, Commonwealth of Virginia

54”-BR27_ STEEL RAILING

BR27T-SERIES

TERMINAL WALL ON SUPERSTRUCTURE WITH DECK SLAB EXTENSION

NOTES TO DESIGNER:

The BR27_steel railing uses the BR27T-series for concrete terminal walls in conjunction with the BR27C or BR27D series.

This concrete terminal wall standard has a height of 4’-6” from the roadway surface.

Include this standard when using standard BR27C series (B27C-13 thru BR27C-15) or BR27D series (BR27D-9 and BR27D-10) with terminal wall on superstructure with deck slab extension.

Terminal wall is detailed on the deck slab extension of a superstructure or a slab span. A 2’-0” wide section on inside of superstructure (for BR27C-13 and BR27D-9) or at the edge of superstructure (for BR27C-14, BR27C-15 and BR27D-10) is extended further from the end of deck slab to an overall distance of 1’-6” from the end of the terminal wall to the back of the abutment backwall. This concrete section and the terminal wall shall be part of the steel railing for payment. The superstructure plan would need to be adjusted to reflect the location of the slab extension at the end of the deck slab. This standard may be modified by omitting the details and notes for guardrail attachment when used as an on outside of structure in conjunction with an inside traffic barrier for the shared use path (SUP). For geometrics of SUP, see Office Practice, Vol. V-Part 2, Chapter 6, sheets 4-10 to 4-16.

It is the Contractor’s responsibility to determine the number of reinforcing bars required as well as any details or dimensions. Therefore, these items are to be left blank in the Reinforcing Steel Schedule.

Transverse bars and longitudinal bars of the deck slab or slab span are included in the Superstructure Reinforcing Steel Schedule.

ADD THE FOLLOWING NOTES, DIMENSIONS, DETAILS, ETC. TO STANDARD:

ELEVATION:

Provide dimension for terminal wall end support.

SECTION A-A:

For projects with bituminous overlay, modify 4’-6” height of terminal wall so that this dimension will be established from top of overlay surface.

Provide dimension for terminal wall end support.

54”-BR27_ STEEL RAILING

BR27T-SERIES

TERMINAL WALL ON SUPERSTRUCTURE WITH DECK SLAB EXTENSION

ADD THE FOLLOWING NOTES, DIMENSIONS, DETAILS, ETC. TO STANDARD: (cont’d)

SECTION B-B:

For projects with bituminous overlay, modify vertical dimension 9” and the range (1’-9¾” min. – 1’- 10¾” max.) for location of bolts so that these dimensions will be established from top of overlay surface.

NOTES:

Complete first note by adding the Class I, II or III of corrosion resistant reinforcing steel required. For additional information on corrosion resistant reinforcing steels (CRR), see Structure and Bridge Division Memorandum (current IIM-S&B-81).

Complete sheet no. for details of deck slab extension.

Complete sheet no. for details and reinforcing steel schedule of steel railing.

REINFORCING STEEL SCHEDULE:

Add dimension and length for rebar RV0503.

TITLE BLOCK:

Replace standard designation with Plan No.

STATE	FEDERAL AID ROUTE	FEDERAL AID PROJECT	STATE ROUTE	STATE PROJECT	SHEET NO.
VA.	—				

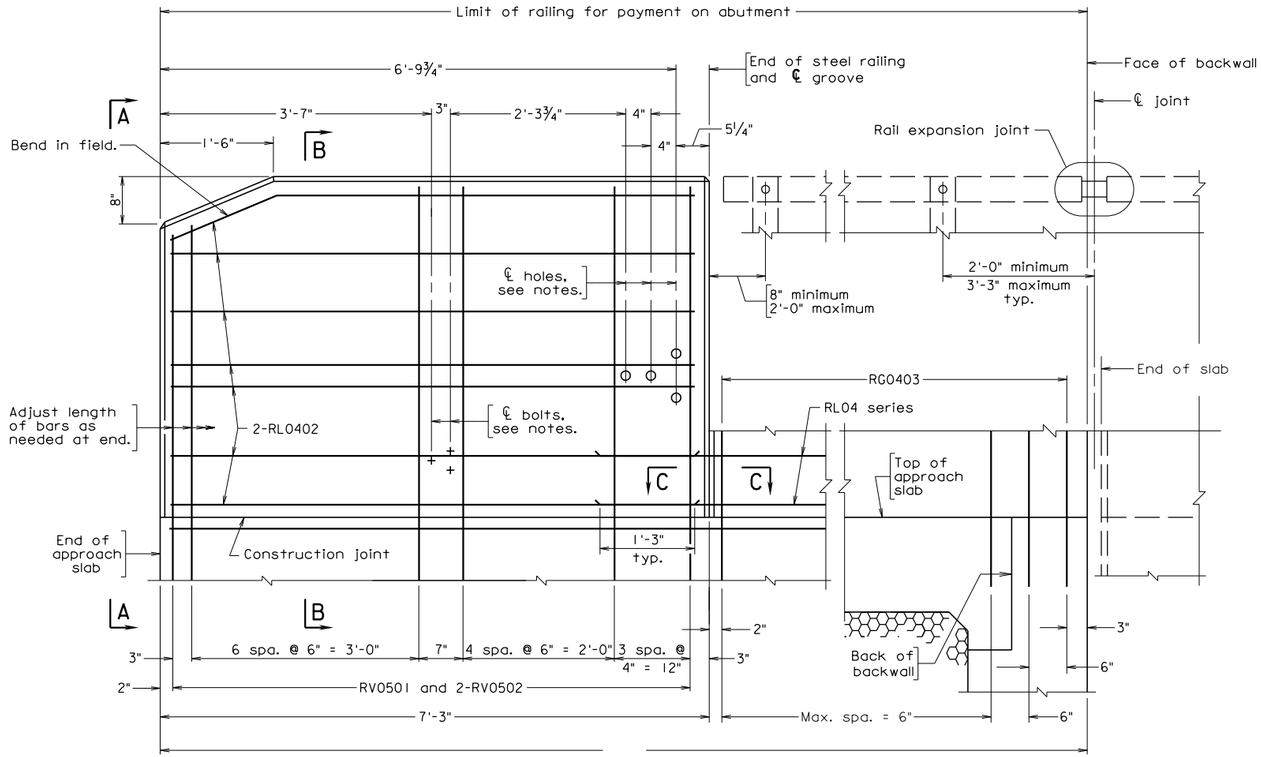

TERMINAL WALL

ABUTMENT

ELEVATION

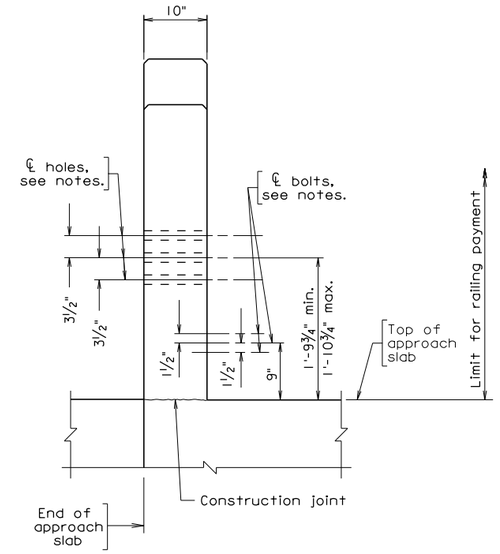

VIEW A-A

Notes:

All bevels for concrete on this sheet shall be ¾". Rounded edges with 1" radius may be used in lieu of bevels along top of rail.

All reinforcing bars shall be Corrosion Resistant Reinforcing Steel, Class __.

Each terminal wall shall be cast as one piece.

The Contractor shall determine all details necessary for installation.

All concrete shall be Class A4.

For details of wingwall below construction joint, see abutment sheets.

Terminal walls are detailed to take guardrail attachment GR-FOA-1.

Holes, where shown, shall be formed with sleeves of 1½" diameter nominal pipe.

Bolts for guardrail attachment where shown shall be ⅝" diameter expansion anchor bolts 6" long to be drilled and installed when rub rail is attached.

For details and reinforcing steel schedule of steel railing, see sheet __.

Bid item for terminal wall shall include concrete noted in plans and reinforcing steel indicated in Reinforcing Steel Schedule.

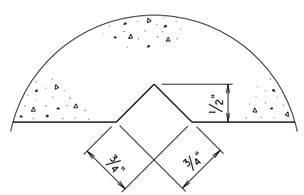

SECTION C-C

Full scale

Groove detail for both sides of rail

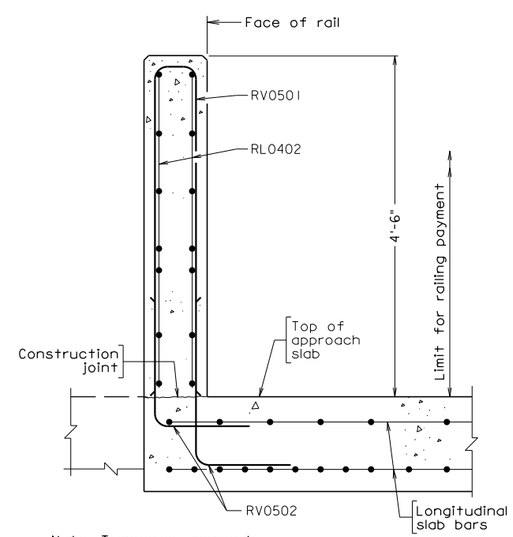

Note: Tranverse approach slab bars not shown.

SECTION B-B

REINFORCING STEEL SCHEDULE

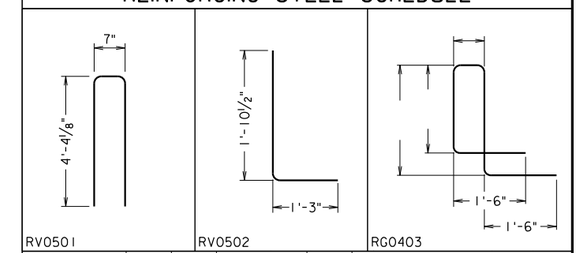

Mark	Size	No.	Length	Pin ø	Location
RL0402	#4		6'-11"	—	Terminal wall
RV0501	#5		9'-0"	3¾"	Terminal wall
RV0502	#5		3'-0"	3¾"	Terminal wall
RG0403	#4			3"	Parapet
RL04	#4			—	Parapet

Dimensions in bending diagram are out-to-out of bars.

br27t9.dgn

12-14-2012

BR27T-9

Sealed and Signed by:
Julius F.J. Volgyi Jr.
Lic. No. 010487
On the date of
December 14, 2012

A copy of the original sealed and signed standard drawing is on file in the Central Office.

VDOT S&B DIVISION
RICHMOND, VA
STRUCTURAL ENGINEER

No.	Description	Date

Revisions

Scale: 1" = 1'-0" unless otherwise noted.

© 2012, Commonwealth of Virginia

COMMONWEALTH OF VIRGINIA
DEPARTMENT OF TRANSPORTATION

STRUCTURE AND BRIDGE DIVISION

54" BR27C/BR27D TERMINAL WALL

Designed: S&B DIV
Drawn: S&B DIV
Checked: S&B DIV

Date

Plan No. BR27T-9

Sheet No.

BR27_ STEEL RAILING
BR27T-SERIES

TERMINAL WALL ON APPROACH SLAB

NOTES TO DESIGNER:

The BR27_steel railing uses the BR27T-series for concrete terminal walls in conjunction with the BR27C or BR27D series.

This concrete terminal wall standard has a height of 4'-6" from the roadway surface.

Include this standard when using standard B27C-13 or BR27D-9 and when terminal wall is detailed on approach slab. This terminal wall with parts of steel railing joined together with the approach slab shall be part of the steel railing for payment under the abutment. For geometrics of terminal wall with approach slab, see Office Practice, Vol. V-Part 2, Chapter 6, sheets 7-2 and 7-3.

It is the Contractor's responsibility to determine the number of reinforcing bars required as well as any details or dimensions. Therefore, these items are to be left blank in the Reinforcing Steel Schedule.

ADD THE FOLLOWING NOTES, DIMENSIONS, DETAILS, ETC. TO STANDARD:

ELEVATION:

Provide overall length from end of approach slab to face of backwall.

VIEW A-A:

For projects with bituminous overlay, modify vertical dimension 9" and the range (1'-9¾" min. – 1'-10¾" max.) for location of bolts so that these dimensions will be established from top of overlay surface.

SECTION B-B:

For projects with bituminous overlay, modify vertical dimension 4'-6" so that this dimension will be established from top of overlay surface.

NOTES:

Complete first note by adding the Class I, II or III of corrosion resistant reinforcing steel required. For additional information on corrosion resistant reinforcing steels (CRR), see Structure and Bridge Division Memorandum (current IIM-S&B-81).

Complete sheet nos. for details of approach slab, for details and reinforcing steel schedule of steel railing and for rail expansion joint detail.

BR27_ STEEL RAILING
BR27T-SERIES

TERMINAL WALL ON APPROACH SLAB

ADD THE FOLLOWING NOTES, DIMENSIONS, DETAILS, ETC. TO STANDARD: (cont'd)

REINFORCING STEEL SCHEDULE:

Add dimensions and length for rebar RG0403.

Add length for rebar RL04 series.

TITLE BLOCK:

Replace standard designation with Plan No.

STATE	FEDERAL AID ROUTE	FEDERAL AID PROJECT	STATE ROUTE	STATE PROJECT	SHEET NO.
VA.	—				

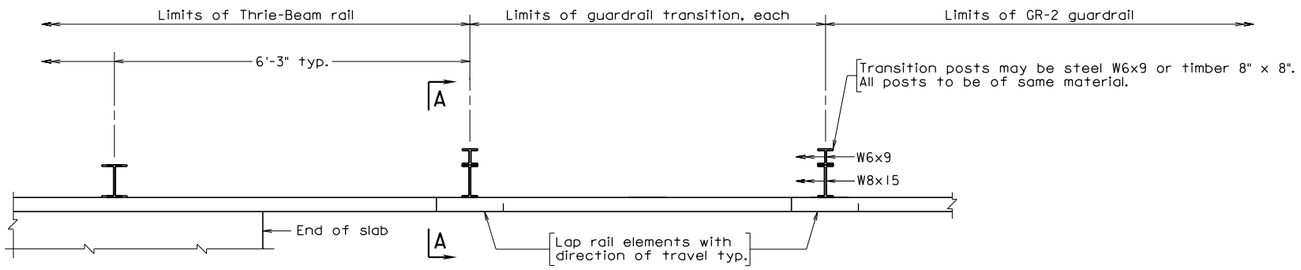

PLAN

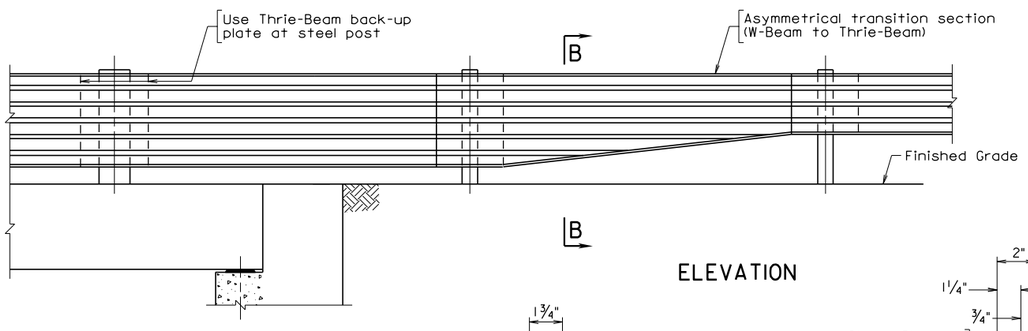

ELEVATION

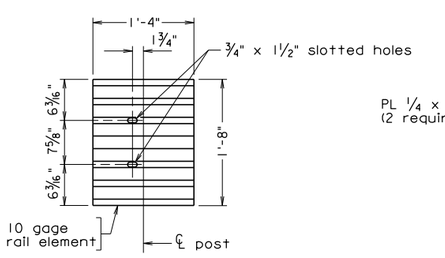

BACK-UP PLATE

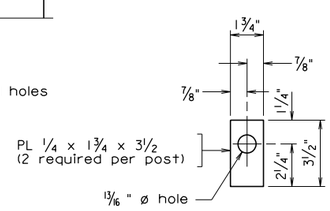

PLATE WASHER A

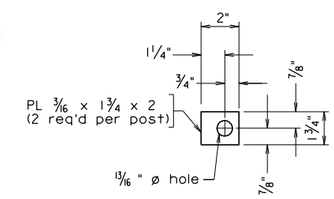

Note: Position washer to completely cover slotted hole.

PLATE WASHER C

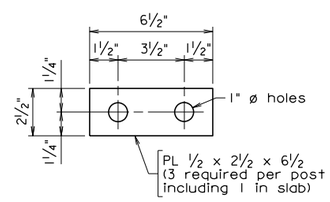

PLATE WASHER B

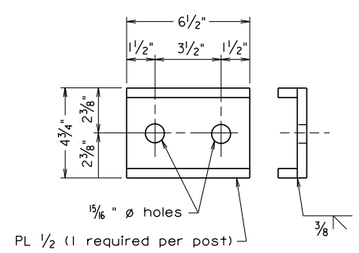

PLATE WASHER D

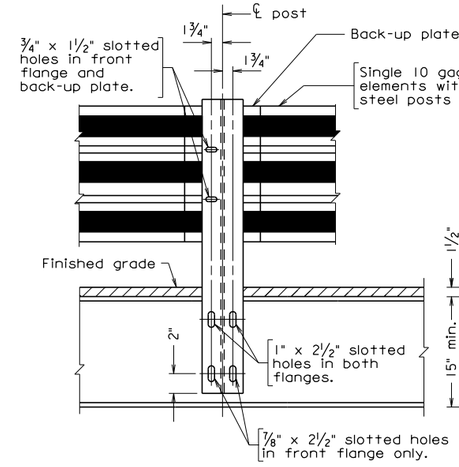

BACK ELEVATION

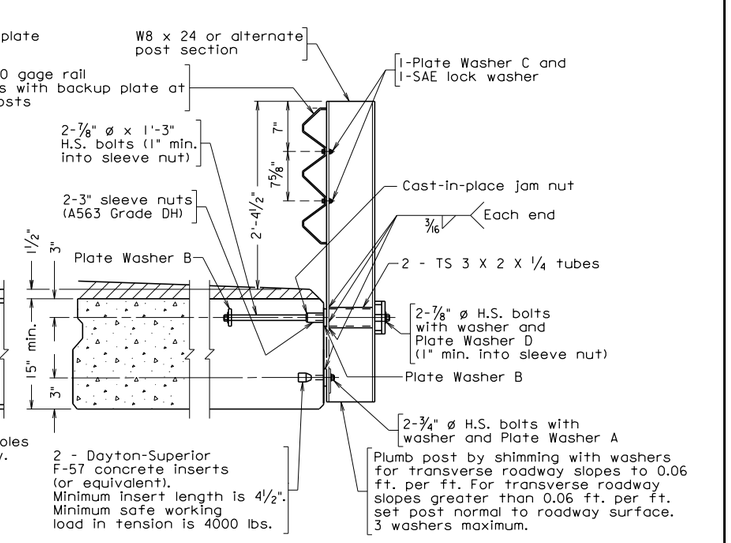

SIDE ELEVATION

Notes:

Posts and plates shall conform to ASTM A709 Grade 36 unless noted otherwise. Structural tubes shall conform to ASTM A500 Grade B. High Strength bolts shall conform to ASTM A325. All steel shall be hot dip galvanized.

For Standard Thrie-Beam Guardrail details, see Road and Bridge Standards.

Guardrail hardware shall be in accordance with VDOT Road and Bridge Standards. Hot dip galvanize all structural steel and hardware after fabrication. Fabricate railing to the horizontal and vertical alignment of the structure. Install posts normal to grade. When wearing surface thickness varies due to beam camber and/or superelevation, vary rail post lengths to provide uniform height.

Tighten upper high strength post bolts 1/6 turn past snug tight condition. Tighten lower high strength post bolts 1/3 turn past snug tight condition.

When railing cannot be terminated as per the Road and Bridge Standards, contact the Location and Design Special Design Section to obtain recommendations.

Limits for payment of thrie-beam rail shall include rail posts and required hardware and inserts to install railing to exterior bridge slabs. The length of 10 gage thrie-beam rail shall be sufficient for lap details described in plans.

Limits for payment of guardrail transition shall include posts, W8x15 post offsets and transition piece of thrie-beam rail as detailed. The length of 10 gage guardrail transition rail shall be sufficient for lap details described in plans.

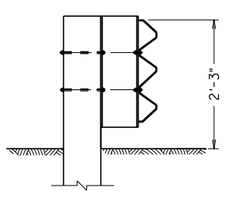

SECTION A-A
Shown with timber post

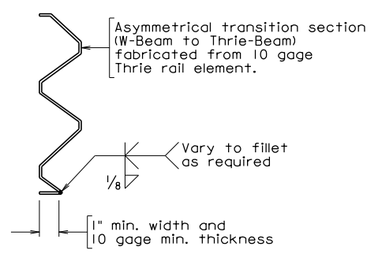

SECTION B-B

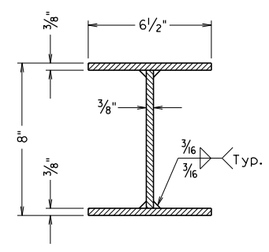

ALTERNATE POST SECTION

Not to Scale

© 2012, Commonwealth of Virginia

BTB-1.dgn

08-07-2012

BTB-1

Sealed and Signed by:
Julius F.J. Volgyi Jr.
Lic. No. 010487
On the date of
Aug. 7, 2012

A copy of the original sealed and signed standard drawing is on file in the Central Office.

VDOT S&B DIVISION
RICHMOND, VA
STRUCTURAL ENGINEER

No.	Description	Date
	Revisions	

COMMONWEALTH OF VIRGINIA
DEPARTMENT OF TRANSPORTATION

STRUCTURE AND BRIDGE DIVISION

THRIE-BEAM GUARDRAIL

Designed: S&B DIV
Drawn: S&B DIV
Checked: S&B DIV

Date

Plan No. BTB-1

Sheet No.

NOTES TO DESIGNER:

The Thrie-Beam railing has a height of 2'-3" and has been crash tested for TL-2 (TL = test level). The standard may be used on low volume roads when an open railing is required. See Volume V – Part 2: Chapter 25 for additional information on the appropriate use of this railing.

This railing was crash tested by Oregon and approved by the FHWA.

There is another Thrie-Beam rail designed by Oregon consisting of nested railing and changes in post spacing, etc. and has not been crash tested. This rail is not approved for use on projects.

STATE	FEDERAL AID ROUTE	FEDERAL AID PROJECT	STATE ROUTE	STATE PROJECT	SHEET NO.
VA.	—				

1. 4" ø PVC-D duct
2. 4" ø galv. steel duct
3. 4" ø PVC-B duct
4. PVC-galv. adaptor
5. Galv.-PVC adaptor
6. PVC exp. joint
7. PVC lock ring

*** Limit of telephone conduit in bridge contract when approach slabs or drainage aprons are not used shall be the extension of the conduit a minimum of one foot behind back of backwall

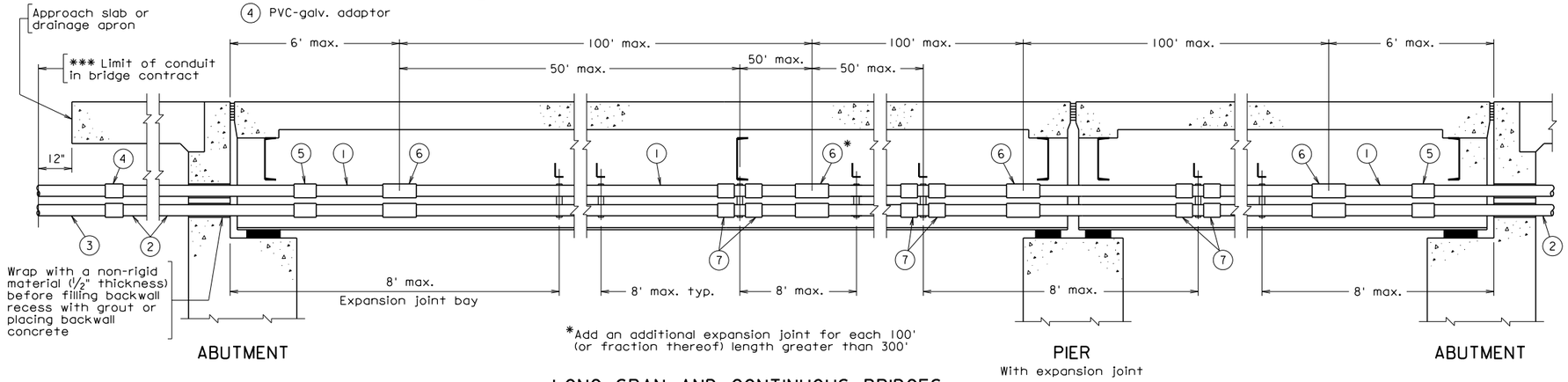

*Add an additional expansion joint for each 100' (or fraction thereof) length greater than 300'

LONG SPAN AND CONTINUOUS BRIDGES

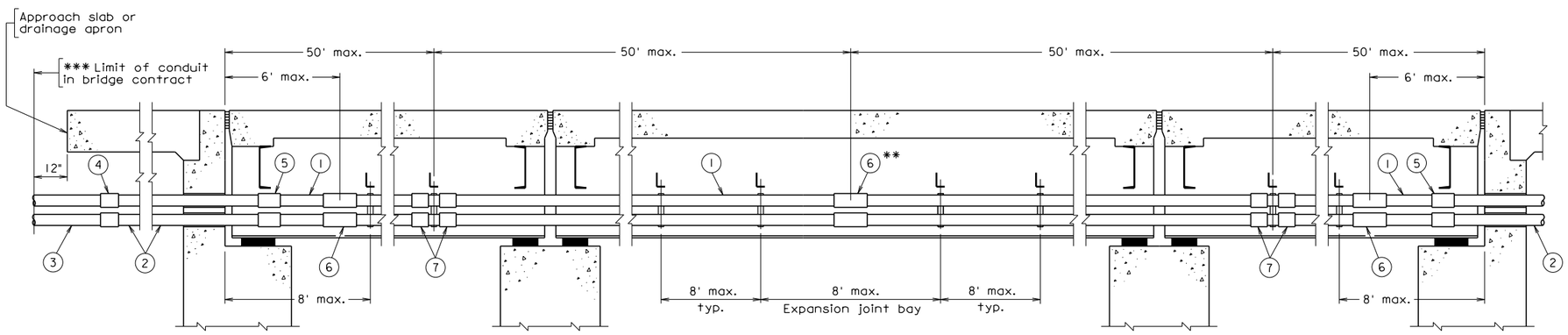

SHORT SPAN BRIDGES

** Not required on bridges under 100' total length. Add an additional expansion joint for every 100' (or fraction thereof) length greater than 200'.

Notes:

PVC conduit shall be PVC-B in buried locations and PVC-D in exposed locations, and shall meet the requirements of AT&T specifications AT-8546.

Duct splices shall be adhesive bonded bell and spigot.

Expansion joints shall be sliding sleeve type to accommodate at least 6" of expansion travel.

Threaded couplings shall be used on steel conduit.

Steel fittings and rods shall be galvanized in accordance with ASTM A153. When the supporting angles to which the rods are attached are weathering steel, a neoprene or vinyl washer shall be placed between the angle surface (on both sides) and the nut/washer to isolate the contact between the two surfaces.

Structural steel for angles shall be the same as that for the beams/girders. If the beams/girders are painted, the angles shall be galvanized in accordance with ASTM A123.

If the angle is galvanized, the H.S. bolts shall be ASTM A325 galvanized. If the angle is not painted (unpainted weathering steel), the H.S. bolts shall be ASTM A325, Type 3.

Hanger details shown are designed to support as many as 12 conduits.
Dead Loads: Cables: 8.5 lbs./ft. per conduit
Conduit: 1.5 lbs./ft.

Under ground installation of PVC-B duct shall be in accordance with Road and Bridge Standards EC1-1 except the minimum spacing between ducts shall be 3/4".

Payment - Telephone Conduit System shall be paid for on a lump sum basis, wherein no measurement shall be made, and shall be paid for at the contract lump sum price. Price shall include furnishing and installing conduit, supporting angles, connections, all related parts/attachments and miscellaneous hardware; all as detailed on the Telephone Conduit System drawing included herein and within the pay limits shown thereon. Such price shall be full compensation for furnishing all materials, labor, tools, equipment and incidentals necessary to complete the work.

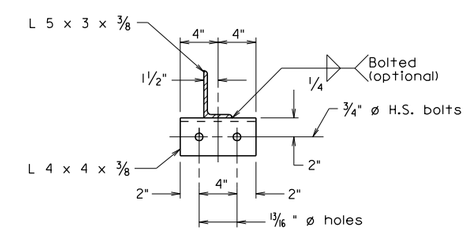

DETAIL B

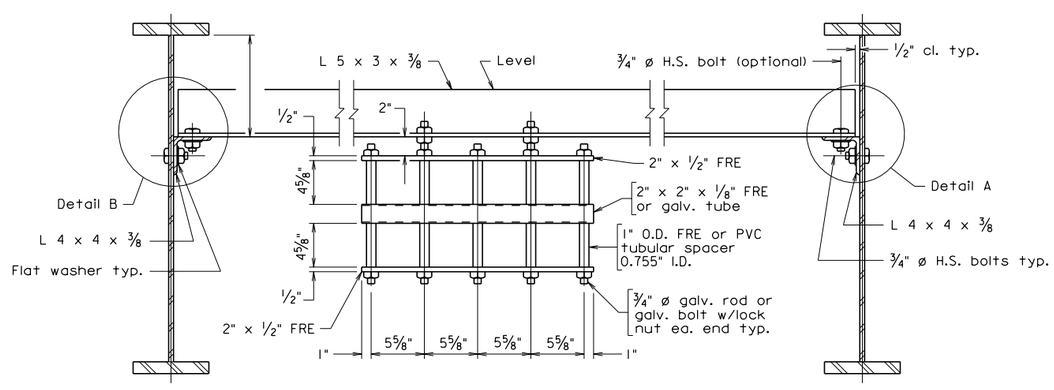

TYPICAL SUPPORT DETAIL

Use Detail A at one end and Detail B at the other end

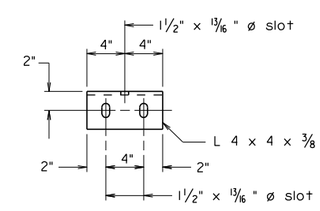

DETAIL A

CONDUIT FORMATIONS

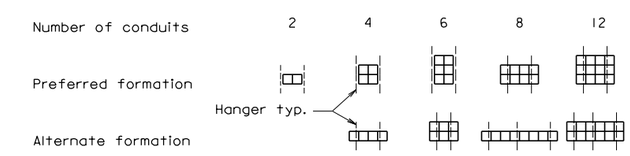

Not to scale

© 2012, Commonwealth of Virginia

No.	Description	Date

Revisions

COMMONWEALTH OF VIRGINIA
DEPARTMENT OF TRANSPORTATION

STRUCTURE AND BRIDGE DIVISION

TELEPHONE CONDUIT SYSTEM

G. Henderson

Designed: S&B DIV
Drawn: S&B DIV
Checked: S&B DIV

Date

Plan No. BTC-4

Sheet No.

btc4.dgn

08-07-2012

Sealed and Signed by:
Julius F.J. Volgyi Jr.
Lic. No. 010487
On the date of
Aug. 7, 2012

A copy of the original sealed and signed standard drawing is on file in the Central Office.

VDOT S&B DIVISION
RICHMOND, VA
STRUCTURAL ENGINEER

BTC-4

TELEPHONE CONDUIT SYSTEM

PVC CONDUIT
STEEL BEAM/GIRDER SPANS

NOTES TO DESIGNER:

Standard is for use with: PVC conduit
Steel beam/girder spans

Show conduit formation on transverse section sheet and indicate number of conduits (e.g. 4 -4" ϕ telephone conduits). Show dimension from bottom of top flange (top of web) to support angle at the beam/girder the dimension is set on transverse section sheet. When setting the dimension allow for a minimum of 1" (2" to 3" preferred) clearance to diaphragms, cross frames etc. Normally the critical clearances are at the ends of spans (at supports). Indicate location of centerline of telephone conduits on framing plan (e.g., centerline of 4 - 4" ϕ telephone conduits). Do not show hanger spacing on framing plan.

Utilities shall be placed in the exterior bays of the bridge if possible.

ADD THE FOLLOWING NOTES, DIMENSIONS, DETAILS, ETC. TO STANDARD:

TYPICAL SUPPORT DETAIL:

Enter dimension from bottom of top flange to L 5 x 3 x $^{3}/_{8}$ support. This must agree with dimension set on transverse section sheet.

STATE	FEDERAL AID ROUTE	FEDERAL AID PROJECT	STATE ROUTE	STATE PROJECT	SHEET NO.
VA.	—				

1. 4" ø FRE duct
2. 4" ø galv. steel duct
3. 4" ø PVC-B duct
4. PVC-galv. adaptor
5. Galv.-FRE adaptor
6. FRE exp. joint
7. FRE lock ring

*** Limit of telephone conduit in bridge contract when approach slabs or drainage aprons are not used shall be the extension of the conduit a minimum of one foot behind back of backwall

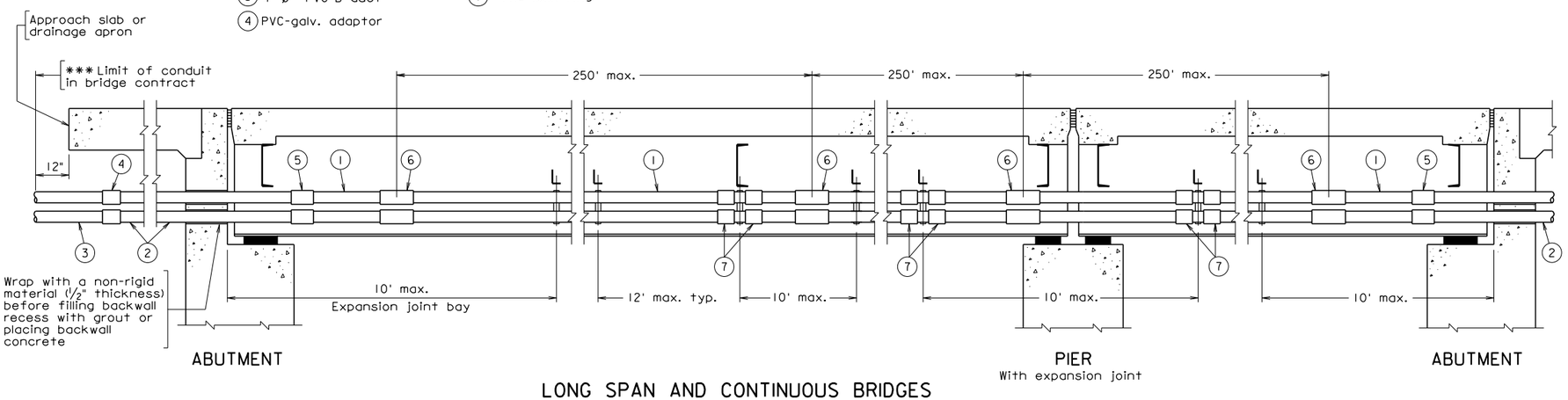

LONG SPAN AND CONTINUOUS BRIDGES

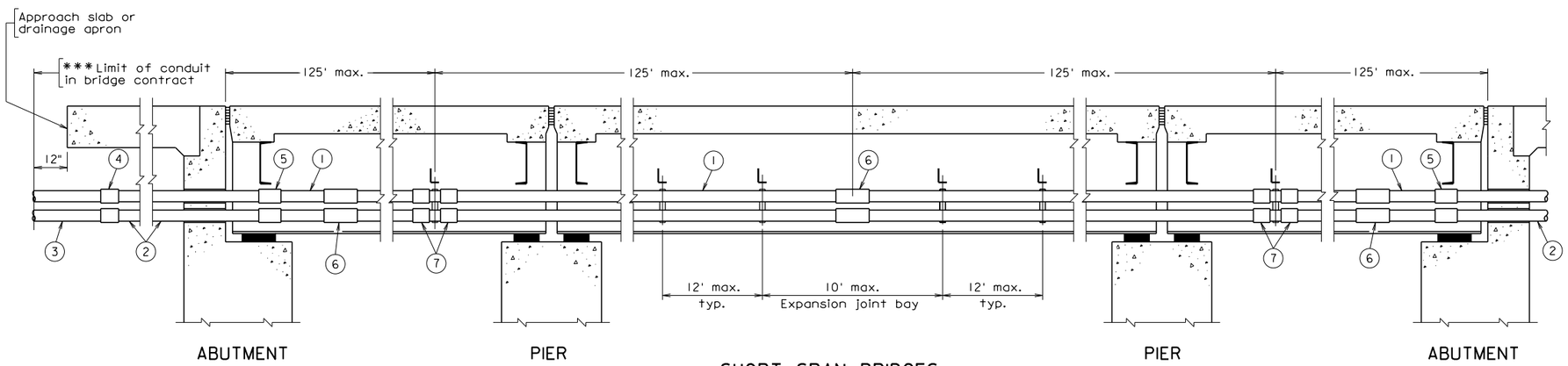

SHORT SPAN BRIDGES

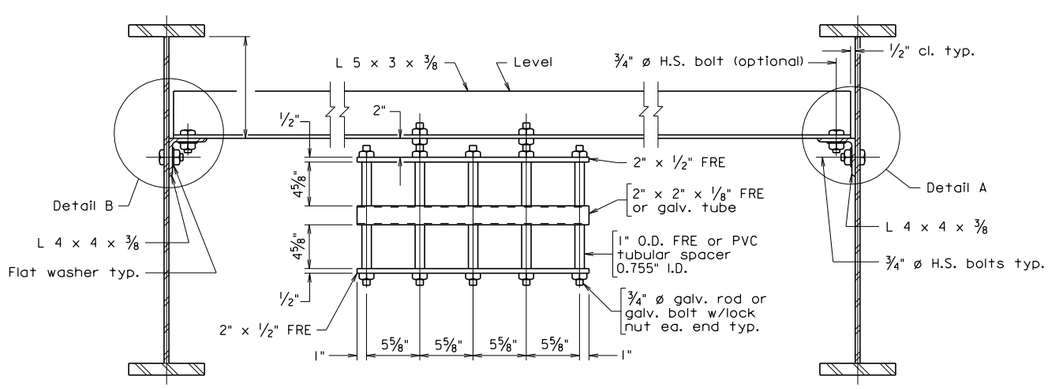

TYPICAL SUPPORT DETAIL

Use Detail A at one end and Detail B at the other end

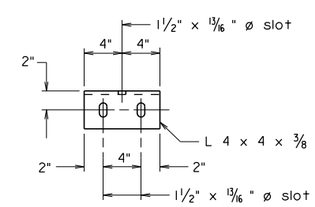

DETAIL A

Notes:

Glass fiber reinforced epoxy (FRE) duct shall comply with ASTM D2310 and ASTM D2996, and shall be RTRP-11AD-1111, except as modified herein.

Inside diameter shall be 4.00" minimum, wall thickness shall be 0.060" minimum.

Duct performance shall not be impaired by exposure to ultraviolet radiation. Duct shall have fire resistance which equals or exceeds requirements of U.L. 651 - Section 17.

Joints shall be positive locking (threaded bell and spigot, adhesive bonded bell and spigot, or driven tapered bell and spigot).

Expansion joints shall be sliding sleeve type, with or without o'rings, with provision for minimum of 6" expansion travel.

Lock rings shall be split FRE duct, minimum of 3" long, .025" minimum thickness, glued in place after installationn of conduit sysyem.

Threaded couplings shall be used on steel conduit.

Steel fittings and rods shall be galvanized in accordance with ASTM A153. When the supporting angles to which the rods are attached are weathering steel, a neoprene or vinyl washer shall be placed between the angle surface (on both sides) and the nut/washer to isolate the contact between the two surfaces.

Structural steel for angles shall be the same as that for the beams/girders. If the beams/girders are painted, the angles shall be galvanized in accordance with ASTM A123.

If the angle is galvanized, the H.S. bolts shall be ASTM A325 galvanized. If the angle is not painted (unpainted weathering steel), the H.S. bolts shall be ASTM A325, Type 3.

For all spans (or expansion lengths) in excess of 250', provide an expansion joint dedicated solely to deck expansion. Additional expansion joints shall be provided as noted to accommodate differential expansion between steel and FRE.

Hanger details shown are designed to support as many as 12 conduits. Dead Loads: Cables: 8.5 lbs./ft. per couduit, Conduit: 0.8 lbs./ft.

Under ground installation of PVC-B duct shall be in accordance with Road and Bridge Standards EC1-1 except the minimum spacing between ducts shall be 3/4".

Payment - Telephone Conduit System shall be paid for on a lump sum basis, wherein no measurement shall be made, and shall be paid for at the contract lump sum price. Price shall include furnishing and installing conduit, supporting angles, connections, all related parts/attachments and miscellaneous hardware; all as detailed on the Telephone Conduit System drawing included herein and within the pay limits shown thereon. Such price shall be full compensation for furnishing all materials, labor, tools, equipment and incidentals necessary to complete the work.

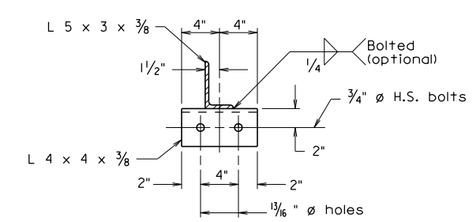

DETAIL B

CONDUIT FORMATIONS

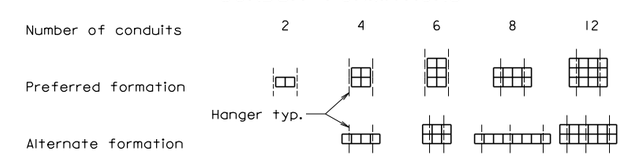

btc5.dgn

08-07-2012

BTC-5

Sealed and Signed by:
Julius F.J. Volgyi Jr.
Lic. No. 010487
On the date of
Aug. 7, 2012

A copy of the original sealed and signed standard drawing is on file in the Central Office.

VDOT S&B DIVISION
RICHMOND, VA
STRUCTURAL ENGINEER

Not to scale

© 2012, Commonwealth of Virginia

No.	Description	Date
	Revisions	

COMMONWEALTH OF VIRGINIA
DEPARTMENT OF TRANSPORTATION

STRUCTURE AND BRIDGE DIVISION

TELEPHONE CONDUIT SYSTEM

G. Henderson

Designed: S&B DIV
Drawn: S&B DIV
Checked: S&B DIV

Date

Plan No. BTC-5

Sheet No.

TELEPHONE CONDUIT SYSTEM

FRE CONDUIT
STEEL BEAM/GIRDER SPANS

NOTES TO DESIGNER:

Standard is for use with: FRE conduit
Steel beam/girder spans

Show conduit formation on transverse section sheet and indicate number of conduits (e.g. 4 -4" ϕ telephone conduits). Show dimension from bottom of top flange (top of web) to support angle at the beam/girder the dimension is set on transverse section sheet. When setting the dimension allow for a minimum of 1" (2" to 3" preferred) clearance to diaphragms, cross frames etc. Normally the critical clearances are at the ends of spans (at supports). Indicate location of centerline of telephone conduits on framing plan (e.g., centerline of 4 - 4" ϕ telephone conduits). Do not show hanger spacing on framing plan.

Utilities shall be placed in the exterior bays of the bridge if possible.

ADD THE FOLLOWING NOTES, DIMENSIONS, DETAILS, ETC. TO STANDARD:

TYPICAL SUPPORT DETAIL:

Enter dimension from bottom of top flange to L 5 x 3 x $^{3}/_{8}$ support. This must agree with dimension set on transverse section sheet.

STATE	FEDERAL AID ROUTE	FEDERAL AID PROJECT	STATE ROUTE	STATE PROJECT	SHEET NO.
VA.	—				

1. 4" ø PVC-D duct
2. 4" ø galv. steel duct
3. 4" ø PVC-B duct
4. PVC-galv. adaptor
5. Galv.-PVC adaptor
6. PVC exp. joint
7. PVC lock ring

*** Limit of telephone conduit in bridge contract when approach slabs or drainage aprons are not used shall be the extension of the conduit a minimum of one foot behind back of backwall

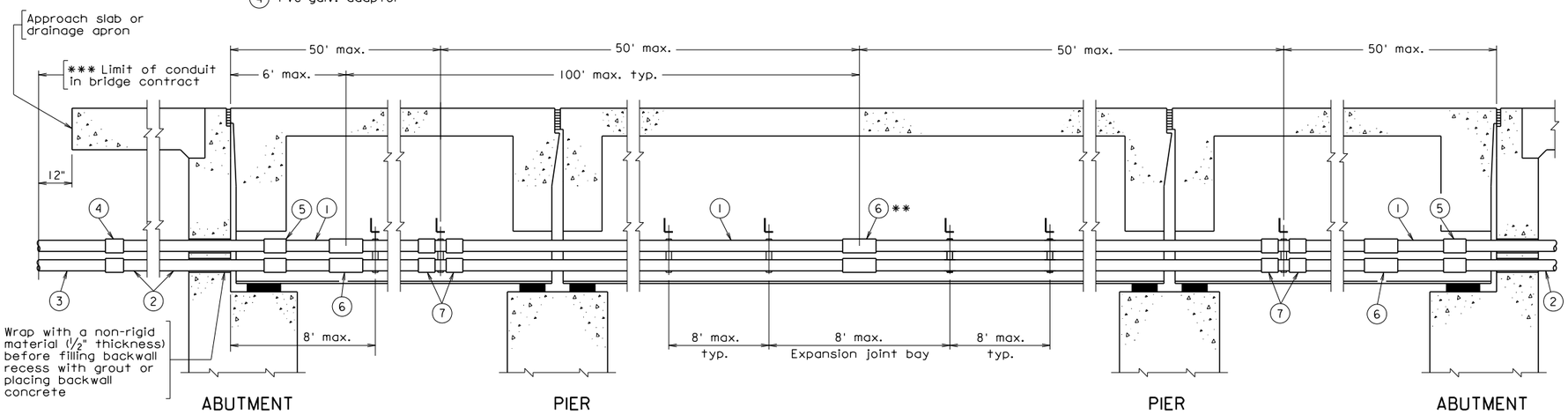

SHORT SPAN BRIDGES

Max. span L = 100'

** Not required on bridges under 100' total length. Add an additional expansion joint for every 100' (or fraction thereof) length greater than 200'.

Notes:

PVC conduit shall be PVC-B in buried locations and PVC-D in exposed locations, and shall meet the requirements of AT&T Specification AT-8546.

Duct splices shall be adhesive bonded bell and spigot.

Expansion joints shall be sliding sleeve type to accommodate at least 6" of expansion travel.

Threaded couplings shall be used on steel conduit.

Steel fittings and rods shall be galvanized in accordance with ASTM A153.

Structural steel for angles shall be ASTM A36. The angles shall be galvanized in accordance with ASTM A123.

H.S. bolts for angles shall be ASTM A325 galvanized.

Hanger details shown are designed to support as many as 12 conduits.
Dead Loads: Cables: 8.5 lbs./ft. per conduit
Conduit: 1.5 lbs./ft.

Under ground installation of PVC-B duct shall be in accordance with Road and Bridge Standards EC1-1 except the minimum spacing between ducts shall be 3/4".

Payment - Telephone Conduit System shall be paid for on a lump sum basis, wherein no measurement shall be made, and shall be paid for at the contract lump sum price. Price shall include furnishing and installing conduit, supporting angles, connections, all related parts/attachments and miscellaneous hardware; all as detailed on the Telephone Conduit System drawing included herein and within the pay limits shown thereon. Such price shall be full compensation for furnishing all materials, labor, tools, equipment and incidentals necessary to complete the work.

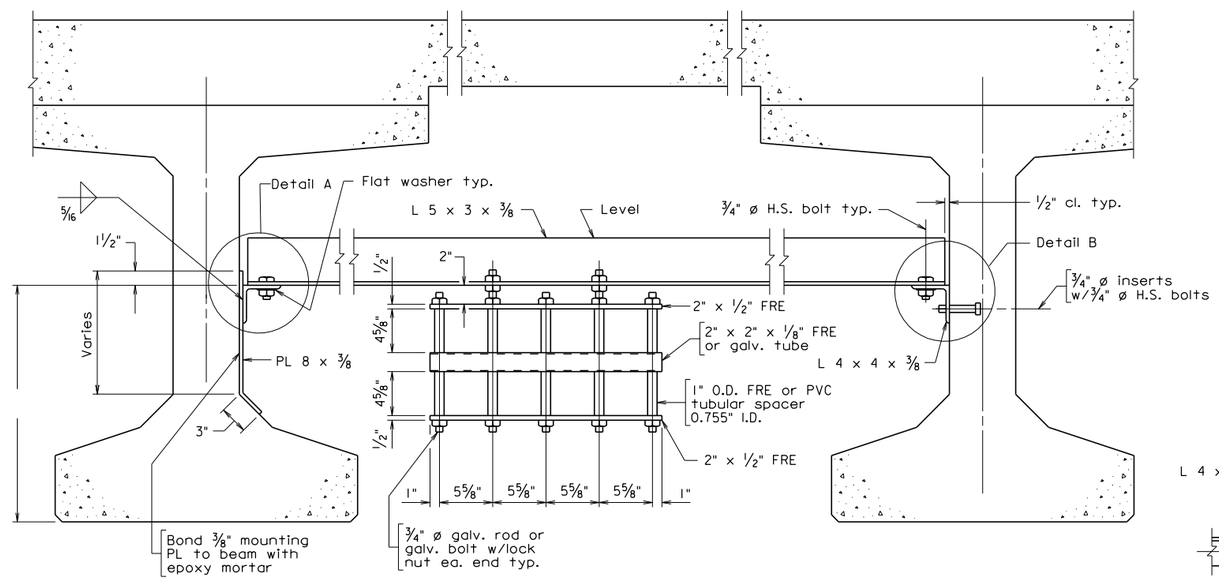

TYPICAL SUPPORT DETAIL

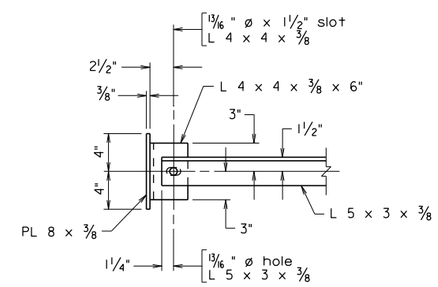

DETAIL A

Existing Structure

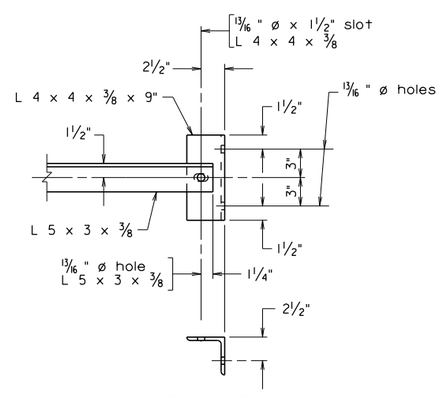

DETAIL B

New Structure

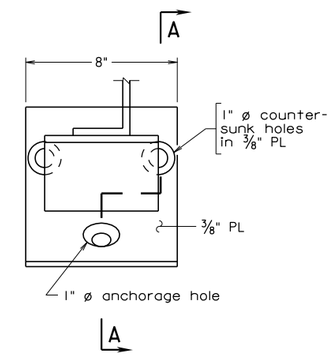

ELEVATION

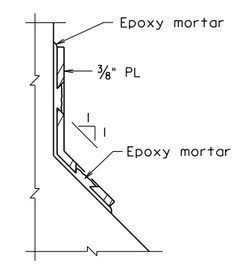

SECTION A-A

MOUNTING PLATE DETAIL

CONDUIT FORMATIONS

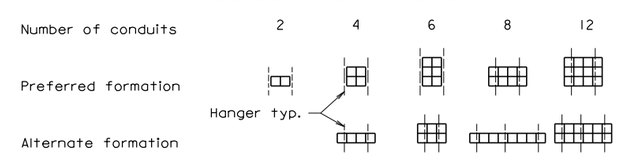

Not to scale

© 2012, Commonwealth of Virginia

btc6.dgn

08-07-2012

BTC-6

Sealed and Signed by:
Julius F.J. Volgyi Jr.
Lic. No. 010487
On the date of
Aug. 7, 2012

A copy of the original sealed and signed standard drawing is on file in the Central Office.

VDOT S&B DIVISION
RICHMOND, VA
STRUCTURAL ENGINEER

No.	Description	Date
	Revisions	

COMMONWEALTH OF VIRGINIA
DEPARTMENT OF TRANSPORTATION

STRUCTURE AND BRIDGE DIVISION

TELEPHONE CONDUIT SYSTEM

G. Henderson

Designed: S&B DIV
Drawn: S&B DIV
Checked: S&B DIV

Date

Plan No. BTC-6

Sheet No.

TELEPHONE CONDUIT SYSTEM

PVC CONDUIT
PRESTRESSED CONCRETE BEAM SPANS

NOTES TO DESIGNER:

Standard is for use with: PVC conduit
prestressed concrete Bulb-T beam spans

Show dimension from bottom of beam to bottom of angle support at the beam/girder the dimension is set on the transverse section sheet. When setting the dimension, allow for a minimum of 1" (2" to 3" preferred) clearance to diaphragms, cross frames, etc. Include insulation requirements when setting clearances.

Utilities shall be placed in the exterior bays of the bridge if possible.

ADD THE FOLLOWING NOTES, DIMENSIONS, DETAILS, ETC. TO STANDARD:

TYPICAL SUPPORT DETAIL:

Enter dimension from bottom of beam to L 5 x 3 x $^{3}/_{8}$ support. This must agree with dimension set on transverse section sheet.

STATE	FEDERAL AID ROUTE	FEDERAL AID PROJECT	STATE ROUTE	STATE PROJECT	SHEET NO.
VA.	—				

1. 4" ø FRE duct
2. 4" ø galv. steel duct
3. 4" ø PVC-B duct
4. PVC-galv. adaptor
5. Galv.-FRE adaptor
6. FRE exp. joint
7. FRE lock ring

*** Limit of telephone conduit in bridge contract when approach slabs or drainage aprons are not used shall be the extension of the conduit a minimum of one foot behind back of backwall

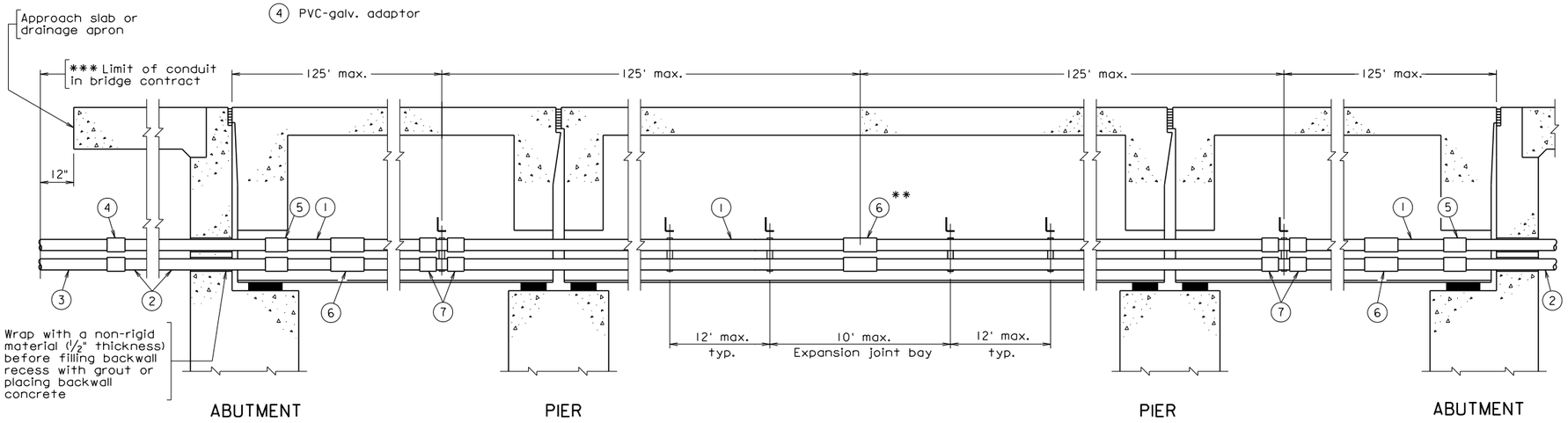

SHORT SPAN BRIDGES

Max. span L = 200'

** Not required on bridges under 250' total length

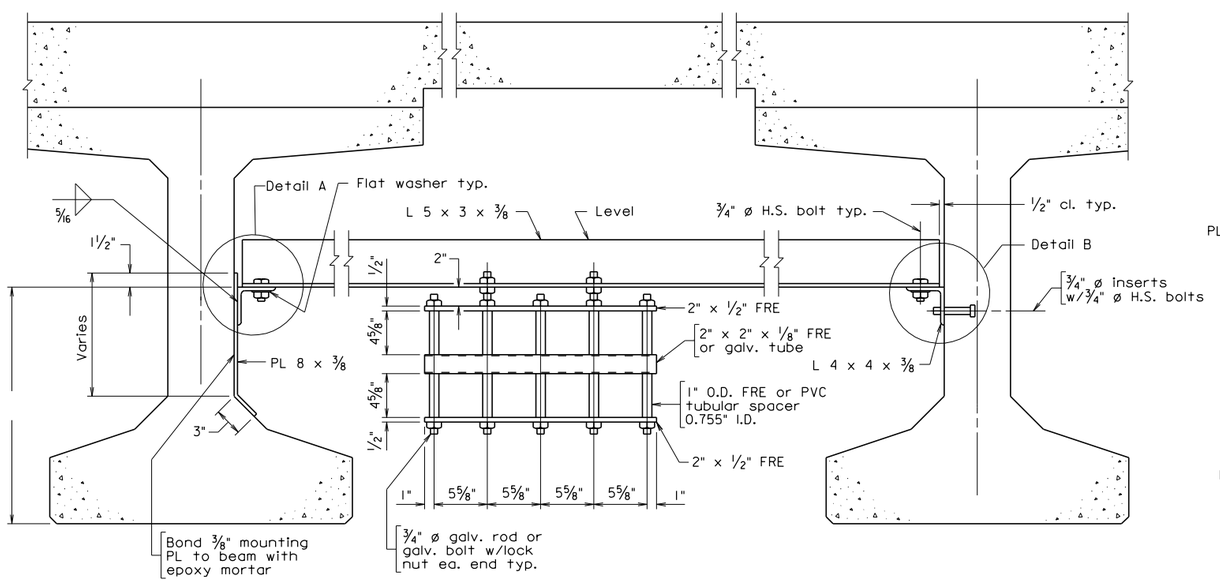

TYPICAL SUPPORT DETAIL

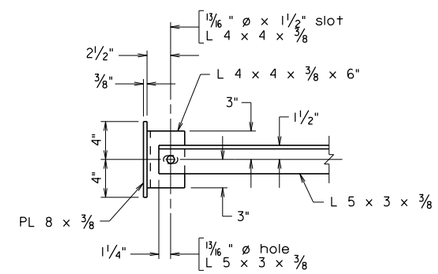

DETAIL A

Existing structure

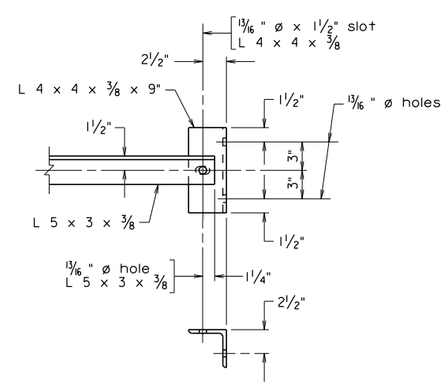

DETAIL B

New structure

Not to scale

© 2012, Commonwealth of Virginia

Notes:

Glass fiber reinforced epoxy (FRE) duct shall comply with ASTM D2310 and ASTM D2996, and shall be RTRP-11AD-1111, except as modified herein.

Inside diameter shall be 4.00" minimum, wall thickness shall be 0.060" minimum.

Duct performance shall not be impaired by exposure to ultraviolet radiation. Duct shall have fire resistance which equals or exceeds requirements of U.L. 651 - Section 17.

Joints shall be positive locking, (threaded bell and spigot, adhesive bonded bell and spigot, or driven tapered bell spigot).

Expansion joints shall be sliding sleeve type, with or without o'ringss, with provision for minimum of 6" expansion travel.

Lock rings shall be split FRE duct, minimum of 3" long, .025" minimum thickness, glued in place after installation of conduit system.

Threaded couplings shall be used on steel conduit.

Steel fittings and rods shall be galvanized in accordance with ASTM A153.

Structural steel for angles shall be ASTM A36. The angles shall be galvanized in accordance with ASTM A123.

H.S. bolts for angles shall be ASTM A325 galvanized.

Hanger details shown are designed to support as many as 12 conduits.
Dead Loads: Cables: 8.5 lbs./ft. per conduit
Conduit: 0.8 lbs./ft.

Under ground installation of PVC-B duct shall be in accordance with Road and Bridge Standards ECI-1 except the minimum spacing between ducts shall be 3/4".

Payment - Telephone Conduit System shall be paid for on a lump sum basis, wherein no measurement shall be made, and shall be paid for at the contract lump sum price. Price shall include furnishing and installing conduit, supporting angles, connections, all related parts/attachments and miscellaneous hardware; all as detailed on the Telephone Conduit System drawing included herein and within the pay limits shown thereon. Such price shall be full compensation for furnishing all materials, labor, tools, equipment and incidentals necessary to complete the work.

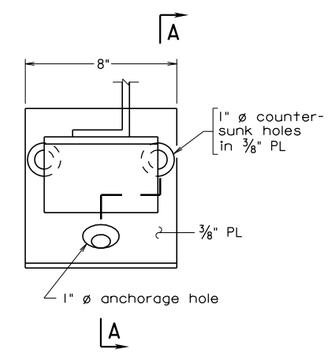

ELEVATION

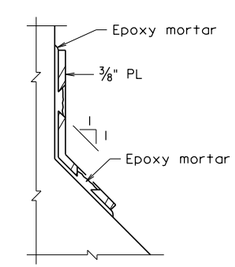

SECTION A-A

MOUNTING PLATE DETAIL

CONDUIT FORMATIONS

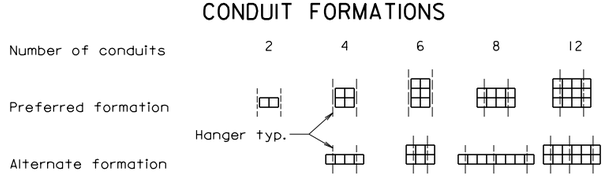

btc7.dgn

08-07-2012

BTC-7

Sealed and Signed by: Julius F.J. Volgyi Jr. Lic. No. 010487 On the date of Aug. 7, 2012

A copy of the original sealed and signed standard drawing is on file in the Central Office.

VDOT S&B DIVISION
RICHMOND, VA
STRUCTURAL ENGINEER

No.	Description	Date
	Revisions	

COMMONWEALTH OF VIRGINIA
DEPARTMENT OF TRANSPORTATION

STRUCTURE AND BRIDGE DIVISION

TELEPHONE CONDUIT SYSTEM

G. Henderson

Designed: S&B...DIV
Drawn: ....S&B...DIV
Checked: S&B...DIV

Date

Plan No. BTC-7

Sheet No.

TELEPHONE CONDUIT SYSTEM

FRE CONDUIT
PRESTRESSED CONCRETE BEAM SPANS

NOTES TO DESIGNER:

Standard is for use with: FRE conduit
Prestressed concrete Bulb-T beam spans

Show dimension from bottom of beam to bottom of angle support at the beam/girder the dimension is set on the transverse section sheet. When setting the dimension, allow for a minimum of 1" (2" to 3" preferred) clearance to diaphragms, cross frames, etc. Include insulation requirements when setting clearances.

Utilities shall be placed in the exterior bays of the bridge if possible.

ADD THE FOLLOWING NOTES, DIMENSIONS, DETAILS, ETC. TO STANDARD:

TYPICAL SUPPORT DETAIL:

Enter dimension from bottom of beam to L 5 x 3 x $^{3}/_{8}$ support. This must agree with dimension set on transverse section sheet.

STATE	FEDERAL AID ROUTE	FEDERAL AID PROJECT	STATE ROUTE	STATE PROJECT	SHEET NO.
VA.	—				

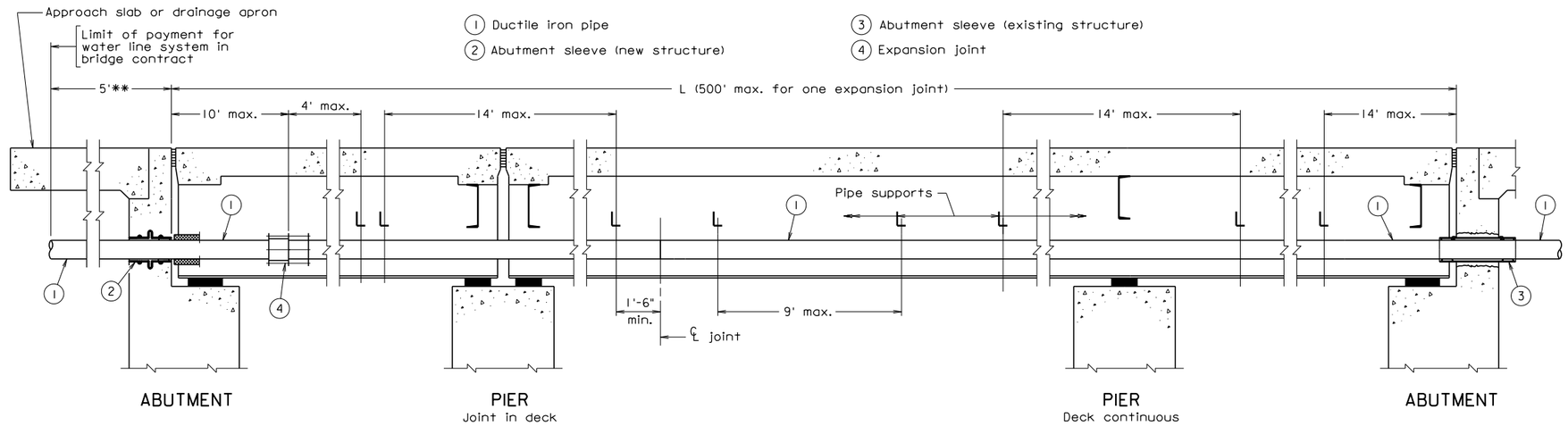

ELEVATION
Not to scale

** Or 2' beyond approach slab when casing is required

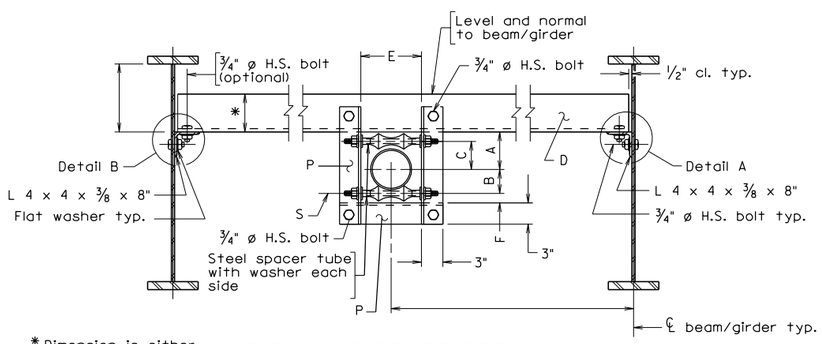

* Dimension is either 6", 7" or 8"

TYPICAL SUPPORT DETAIL
AT EXPANSION JOINT
Scale: 1" = 1'-0"

For insulation, use 2" foam (urethane) insulation with white vinyl cover and protection saddles. Provide support detail on both sides of expansion joint for bridges over 500'.

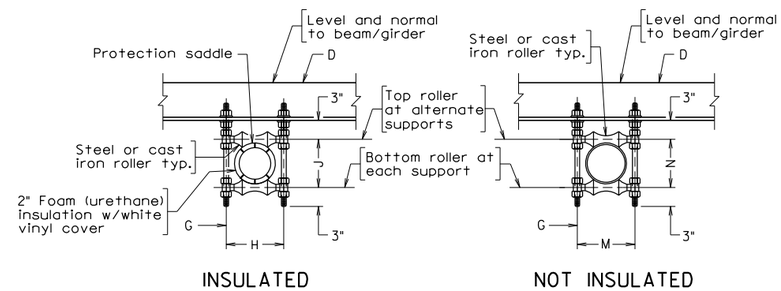

INSULATED NOT INSULATED

TYPICAL SUPPORT DETAIL
Scale: 1" = 1'-0"
For details not shown, see Typical Support Detail at Expansion Joint.

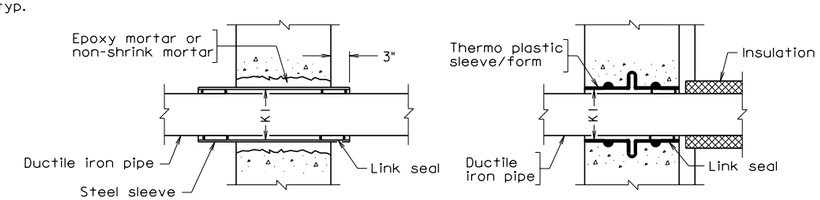

EXISTING STRUCTURE NEW STRUCTURE

ABUTMENT SLEEVE DETAIL
Scale: 1" = 1'-0"

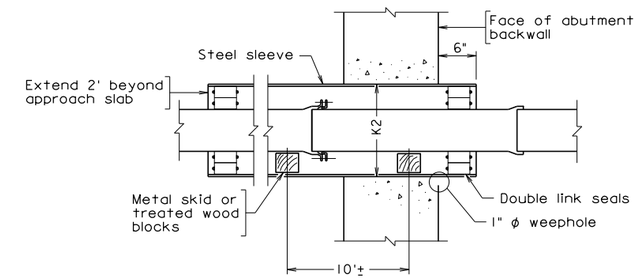

ABUTMENT SLEEVE DETAIL
NEW STRUCTURE
Scale: 1" = 1'-0"
Note: Water line casing detail when line is under approach slab.

Notes:

Material - Ductile iron with mechanical joint
Minimum thickness - Class 52 (rated pressure 300 psi)
Hydrostatic test pressure shall be 200 psi minimum.
Specification: ANSI A 21.51/AWWA C151
Finish - Cement lined; bituminous outer coat
Steel casing - API 5L-B 3/8" wall

Structural steel for angles shall be the same as that for the beams/girders. If the beams/girders are painted, the angles shall be galvanized in accordance with ASTM A123.

If the angle is galvanized, the H.S. bolts shall be ASTM A325 galvanized. If the angle is not painted (unpainted weathering steel), the H.S. bolts shall be ASTM A325, Type 3.

Abutment - Casing as detailed or Century-Line sleeve to be used for proposed structure only.
Seal - one link-seal at each face.

Expansion Joint - Dresser style 63, Type 3

Galvanization - Miscellaneous hardware: Rods, nuts, etc. shall be galvanized in accordance with ASTM A153. When the supporting angles to which the rods are attached are weathering steel, a neoprene or vinyl washer shall be placed between the angle surface (on both sides) and the nut/washer to isolate the contact between the two surfaces.

Insulation will ___ wil not ___ be required.

Casing under approach slab will ___ will not ___ be required.

Payment - Water Line System shall be paid for on a lump sum basis, wherein no measurement shall be made, and shall be paid for at the contract lump sum price, which price shall include furnishing and installing ductile iron water main, expansion joints, testing, disinfecting (when required), insulation and cover (when required), hangers, rollers, rods, abutment sleeves, link seals, casing under approach slab (when required) and miscellaneous hardware; all as detailed on the Water Line System drawing included herein and within the pay limits shown thereon. Such price shall be full compensation for furnishing all materials, labor, tools, equipment and incidentals necessary to complete the work.

DIMENSIONS

Pipe ø	A	B	C	D	E	F	G	H	J	K1	K2	M	N	P	S
6"	8 1/2"	6 1/2"	6 3/4"	L 6 x 4 x 1/2	1'-1"	2 3/4"	7/8"	1'-2"	1'-1 1/8"	0'-10"	1'-2"	9 11/16"	8 1/8"	L 3 x 3 x 3/8	7/8"
8"	9 3/4"	7 1/2"	7 3/4"	L 6 x 4 x 1/2	1'-3"	2 3/4"	7/8"	1'-3 3/4"	1'-3 5/8"	1'-0"	1'-4"	1'-0 1/8"	10 5/8"	L 3 x 3 x 3/8	1"
10"	11 1/2"	8 3/4"	9"	L 6 x 4 x 1/2	1'-5"	2 3/4"	1"	1'-5 3/4"	1'-6 3/4"	1'-2"	1'-6"	1'-2 1/8"	1'-0 5/8"	L 3 x 3 1/2 x 3/8	1 1/8"
12"	1'-0 3/4"	10"	10 1/4"	L 6 x 4 x 1/2	1'-7"	2 3/4"	1"	1'-7 3/4"	1'-8 1/4"	1'-4"	1'-8"	1'-4"	1'-3"	L 3 x 3 1/2 x 3/8	1 1/4"
14"	11"	8 3/8"	8 5/8"	L 7 x 4 x 1/2	1'-9"	4"	1"	1'-9 1/2"	1'-9 5/8"	1'-6"	1'-10"	1'-5 3/4"	1'-4 3/4"	L 3 x 4 x 3/8	1 1/8"
16"	1'-0 1/4"	9 1/2"	9 3/4"	L 7 x 4 x 1/2	1'-11"	4"	1"	1'-11 1/2"	1'-11 3/8"	1'-8"	2'-0"	1'-7 3/4"	1'-7"	L 3 x 4 x 3/8	1 1/4"
18"	1'-1 1/2"	10 1/2"	10 3/4"	L 8 x 4 x 1/2	2'-1"	4"	1 1/8"	2'-1 3/4"	2'-2 1/8"	1'-10"	2'-2"	1'-9 7/8"	1'-9"	L 3 x 5 x 3/8	1 1/4"
20"	1'-3"	11 5/8"	11 7/8"	L 8 x 4 x 3/4	2'-3"	4"	1 1/4"	2'-4"	2'-4 1/8"	2'-0"	2'-4"	2'-0 1/4"	1'-11 1/4"	L 3 x 5 x 3/8	1 1/4"
24"	1'-7"	1'-2"	1'-2 1/4"	L 8 x 4 x 3/4	2'-7"	4"	1 1/2"	2'-8 3/8"	2'-9 1/8"	2'-6"	2'-10"	2'-4 5/8"	2'-4"	L 3 x 5 x 3/8	1 1/2"

G = diameter of rod
S = diameter of shaft

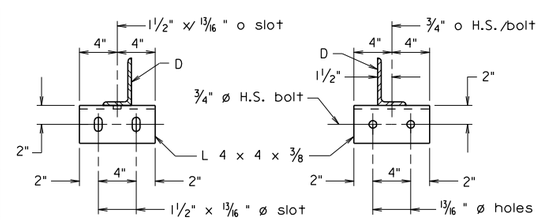

DETAIL A DETAIL B
Scale: 1 1/2" = 1'-0"

Scale as noted.

© 2012, Commonwealth of Virginia

No.	Description	Date
	Revisions	

COMMONWEALTH OF VIRGINIA
DEPARTMENT OF TRANSPORTATION
STRUCTURE AND BRIDGE DIVISION

WATER LINE SYSTEM

G. Henderson

Designed: S&B..DIV
Drawn: ....S&B..DIV
Checked: S&B..DIV

Date

Plan No. BWL-1

Sheet No.

BWL-1.dgn

08-07-2012

BWL-1

Sealed and Signed by: Julius F.J. Volgyi Jr. Lic. No. 010487 On the date of Aug. 7, 2012

A copy of the original sealed and signed standard drawing is on file in the Central Office.

VDOT S&B DIVISION
RICHMOND, VA
STRUCTURAL ENGINEER

WATER LINE SYSTEM
STEEL BEAM/GIRDER SPANS

NOTES TO DESIGNER:

Standard is to be used with steel beam/girder spans. Maximum beam/girder spacing is limited to 10'-0".

Utilities shall be placed in the exterior bays of the bridge if possible.

Values in table on the standard sheet are a composite from several manufacturers/suppliers.

Designer is required to check clearances at abutments if pipe is placed under approach slab. Minimum clearance varies linearly from 6" for a 6" diameter pipe to 12" for a 24" diameter pipe.

Indicate location and size (diameter) of water line to be used on the transverse section sheet. Show dimension from bottom of top flange (top of web) to bottom of angle support at the beam/girder the dimension is set on the transverse section sheet. When setting the dimension, allow for a minimum of 1" (2" to 3" preferred) clearance to diaphragms, cross frames, etc. Include insulation requirements when setting clearances. Normally critical clearances are at the ends of spans (at supports). Indicate location of water line on framing plan. Show centerline and indicate size of water line. Do not show hanger spacing on framing plan.

Utilities Section (R/W) will provide the following information.

1. Size of pipe
2. Requirement for insulation of pipe
3. Requirement for casing under approach slab

For beam/girder design, the following weights may be used (includes total weight of hangers, pipe, and water). Linear interpolation may be used for actual beam/girder spacing.

Diameter of Pipe (inches)	Weight of Water Line (lbs./ft.) Beam/Girder Spacing	
	6'-0"	10'-0"
6	47	54
8	66	72
10	90	95
12	115	121
14	136	144
16	168	175
18	202	210
20	248	259
24	336	348

WATER LINE SYSTEM
STEEL BEAM/GIRDER SPANS

ADD THE FOLLOWING NOTES, DIMENSIONS, DETAILS, ETC. TO STANDARD:

TYPICAL SUPPORT DETAIL AT EXPANSION JOINT:

Enter dimension from bottom of top flange (top of web) to bottom of angle support (angle D in Table). This must agree with dimension set on transverse section sheet. Indicate dimension from centerline of pipe to centerline of beam/girder.

NOTES:

Indicate if insulation will/will not be required. Indicate if casing under approach slab will/will not be required.

STATE	FEDERAL AID ROUTE	FEDERAL AID PROJECT	STATE ROUTE	STATE PROJECT	SHEET NO.
VA.	—				

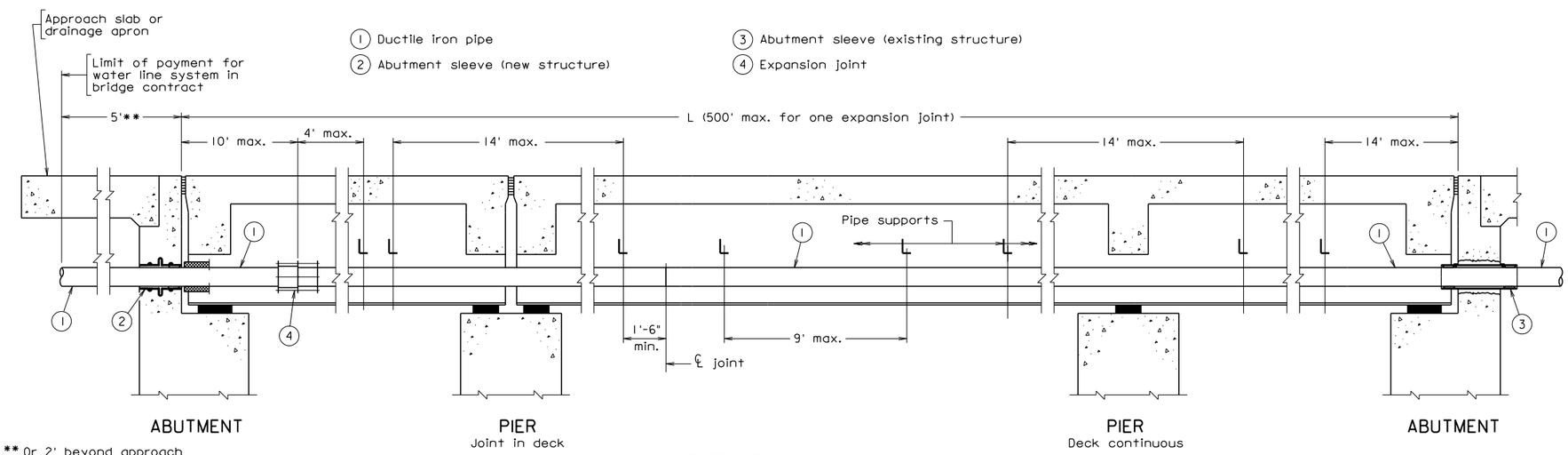

** Or 2' beyond approach slab when casing is required

ELEVATION
Not to scale

Notes:

Material - Ductile iron with mechanical joint
Minimum thickness - Class 52 (rated pressure 300 psi)
Hydrostatic test pressure shall be 200 psi minimum.
Specification: ANSI A 21.51/AWWA C151
Finish - Cement lined; bituminous outer coat
Steel casing - API 5L-B ⅜" wall

Structural steel for angles shall be ASTM A36. The angles shall be galvanized in accordance with ASTM A123.

H.S. bolts for angles shall be ASTM 325 galvanized.

Abutment - Casing as detailed or Century-Line sleeve to be used for proposed structure only.
Seal - one link-seal at each face.

Expansion Joint - Dresser style 63, Type 3

Galvanization - Miscellaneous hardware: Rods, nuts, etc. shall be galvanized in accordance with ASTM A153.

Insulation will ___ wil not ___ be required.

Casing under approach slab will ___ will not ___ be required.

Payment - Water Line System shall be paid for on a lump sum basis, wherein no measurement shall be made, and shall be paid for at the contract lump sum price, which price shall include furnishing and installing ductile iron water main, expansion joints, testing, disinfecting (when required), insulation and cover (when required), hangers, rollers, rods, abutment sleeves, link seals, casing under approach slab (when required) and miscellaneous hardware; all as detailed on the Water Line System drawing included herein and within the pay limits shown thereon. Such price shall be full compensation for furnishing all materials, labor, tools, equipment and incidentals necessary to complete the work.

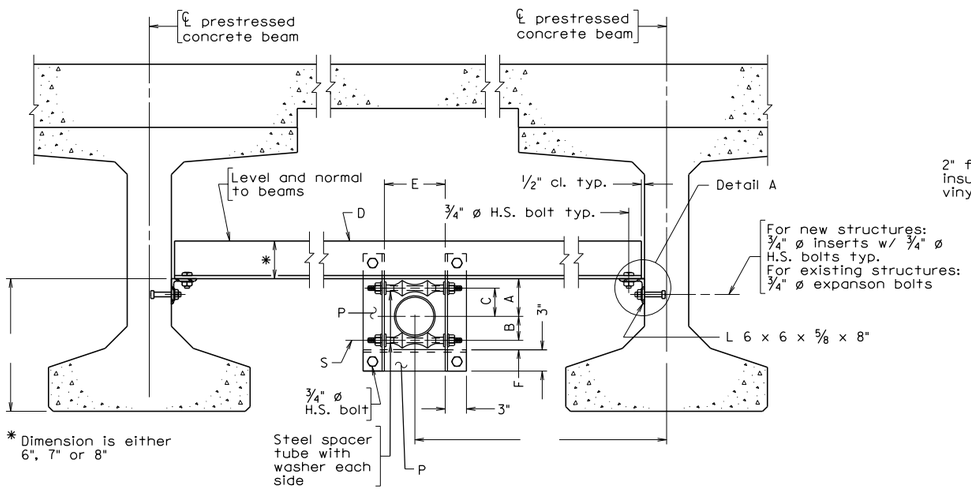

* Dimension is either 6", 7" or 8"

TYPICAL SUPPORT DETAIL AT EXPANSION JOINT
Scale: 1" = 1'-0"

For insulation, use 2" foam (urethane) insulation with white vinyl cover and protection saddles. Provide support detail on both sides of expansion joint for bridges over 500'.

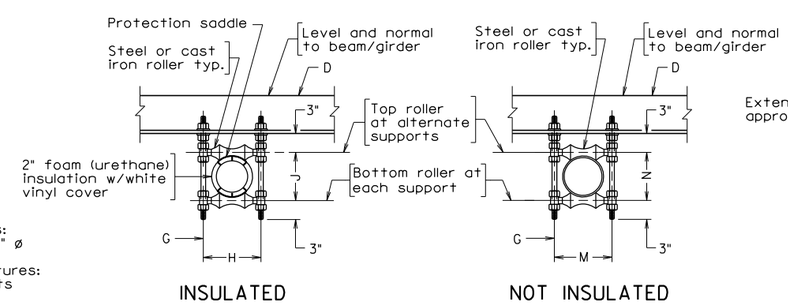

TYPICAL SUPPORT DETAIL
Scale: 1" = 1'-0"

For details not shown, see Typical Support Detail at Expansion Joint.

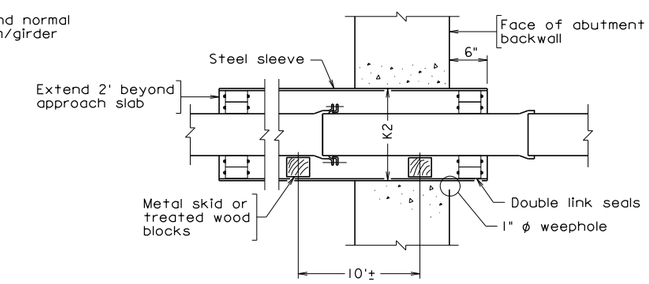

ABUTMENT SLEEVE DETAIL
NEW STRUCTURE
Scale: 1" = 1'-0"

Note: Water line casing detail when line is under approach slab.

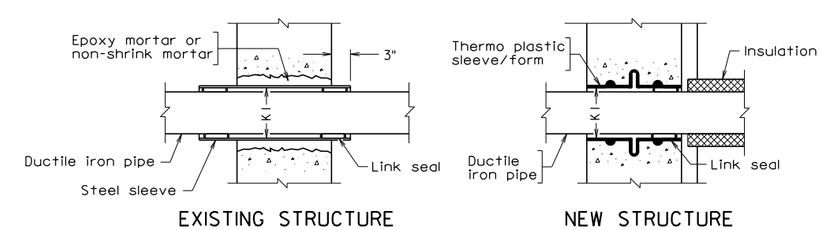

ABUTMENT SLEEVE DETAIL
Scale: 1" = 1'-0"

DIMENSIONS															
Pipe ø	A	B	C	D	E	F	G	H	J	K1	K2	M	N	P	S
6"	8½"	6½"	6¾"	L 6 x 4 x ½	1'-1"	2¾"	⅞"	1'-2"	1'-1⅛"	0'-10"	1'-2"	9 11/16 "	8⅛"	L 3 x 3 x ⅜	⅞"
8"	9¾"	7½"	7¾"	L 6 x 4 x ½	1'-3"	2¾"	⅞"	1'-3¾"	1'-3⅝"	1'-0"	1'-4"	1'-0⅛"	10⅝"	L 3 x 3 x ⅜	1"
10"	11½"	8¾"	9"	L 6 x 4 x ½	1'-5"	2¾"	1"	1'-5¾"	1'-6¾"	1'-2"	1'-6"	1'-2⅛"	1'-0⅝"	L 3 x 3 ½ x ⅜	1⅛"
12"	1'-0¾"	10"	10¼"	L 6 x 4 x ½	1'-7"	2¾"	1"	1'-7¾"	1'-8¼"	1'-4"	1'-8"	1'-4"	1'-3"	L 3 x 3 ½ x ⅜	1¼"
14"	11"	8⅜"	8⅝"	L 7 x 4 x ½	1'-9"	4"	1"	1'-9½"	1'-9⅝"	1'-6"	1'-10"	1'-5¾"	1'-4¾"	L 3 x 4 x ⅜	1⅛"
16"	1'-0¼"	9½"	9¾"	L 7 x 4 x ½	1'-11"	4"	1"	1'-11½"	1'-11⅜"	1'-8"	2'-0"	1'-7¾"	1'-7"	L 3 x 4 x ⅜	1¼"
18"	1'-1½"	10½"	10¾"	L 8 x 4 x ½	2'-1"	4"	1⅛"	2'-1¾"	2'-2⅛"	1'-10"	2'-2"	1'-9⅞"	1'-9"	L 3 x 5 x ⅜	1¼"
20"	1'-3"	11⅝"	11⅞"	L 8 x 4 x ½	2'-3"	4"	1¼"	2'-4"	2'-4⅛"	2'-0"	2'-4"	2'-0¼"	1'-11¼"	L 3 x 5 x ⅜	1¼"
24"	1'-7"	1'-2"	1'-2¼"	L 8 x 4 x ½	2'-7"	4"	1½"	2'-8⅜"	2'-9⅛"	2'-6"	2'-10"	2'-4⅝"	2'-4"	L 3 x 5 x ⅜	1½"

G = diameter of rod
S = diameter of shaft

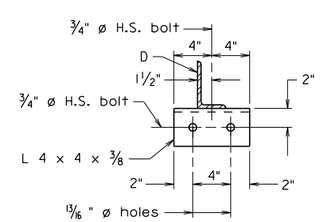

DETAIL A
Scale: 1½" = 1'-0"

Scale as noted.

© 2012, Commonwealth of Virginia

BWL-2.dgn

08-07-2012

Sealed and Signed by: Julius F.J. Volgyi Jr. Lic. No. 010487 On the date of Aug. 7, 2012

A copy of the original sealed and signed standard drawing is on file in the Central Office.

BWL-2

VDOT S&B DIVISION
RICHMOND, VA
STRUCTURAL ENGINEER

No.	Description	Date
	Revisions	

COMMONWEALTH OF VIRGINIA
DEPARTMENT OF TRANSPORTATION

STRUCTURE AND BRIDGE DIVISION

WATER LINE SYSTEM

G. Henderson

Designed: S&B DIV
Drawn: S&B DIV
Checked: S&B DIV

Date

Plan No. BWL-2

Sheet No.

WATER LINE SYSTEM
CONCRETE BEAM SPANS

NOTES TO DESIGNER:

Standard is to be used with concrete beam/girder spans. Maximum beam/girder spacing is limited to 10'-0".

Utilities shall be placed in the exterior bays of the bridge if possible.

Values in table on the standard sheet are a composite from several manufacturers/suppliers.

Designer is required to check clearances at abutments if pipe is placed under approach slab. Minimum clearance varies linearly from 6" for a 6" diameter pipe to 12" for a 24" diameter pipe.

Indicate location and size (diameter) of water line to be used on the transverse section sheet. Show dimension from bottom of beam to bottom of angle support at the beam/girder the dimension is set on the transverse section sheet. When setting the dimension, allow for a minimum of 1" (2" to 3" preferred) clearance to diaphragms, cross frames, etc. Include insulation requirements when setting clearances. Indicate location of water line on framing plan (erection diagram). Show centerline and indicate size of water line. Do not show hanger spacing on framing plan (erection diagram).

Utilities Section (R/W) will provide the following information.

1. Size of pipe
2. Requirement for insulation of pipe
3. Requirement for casing under approach slab

For beam design, the following weights may be used (includes total weight of hangers, pipe, and water). Linear interpolation may be used for actual beam/girder spacing.

Diameter of Pipe (inches)	Weight of Water Line (lbs./ft.) Beam Spacing	
	6'-0"	10'-0"
6	57	64
8	75	81
10	97	103
12	122	128
14	143	150
16	174	181
18	211	218
20	253	265
24	340	351

WATER LINE SYSTEM
CONCRETE BEAM SPANS

ADD THE FOLLOWING NOTES, DIMENSIONS, DETAILS, ETC. TO STANDARD:

TYPICAL SUPPORT DETAIL AT EXPANSION JOINT:

Enter dimension from bottom of beam to bottom of angle support (angle D in Table). This must agree with dimension set on transverse section sheet. Indicate dimension from centerline of pipe to centerline of beam/girder.

NOTES:

Indicate if insulation will/will not be required. Indicate if casing under approach slab will/will not be required.