STATE	FEDERAL AID ROUTE	FEDERAL AID PROJECT	STATE ROUTE	STATE PROJECT	SHEET NO.
VA.	—				

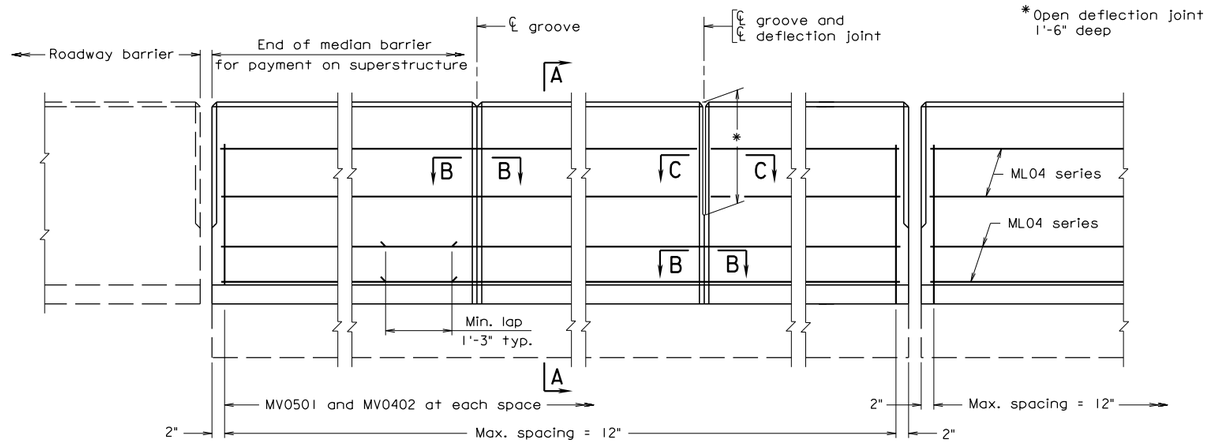

ABUTMENTS

PIERS

ELEVATION

Notes:

Rounded edges with 1" radius may be used in lieu of bevels along top of median barrier.

All reinforcing bars shall be Corrosion Resistant Reinforcing Steel, Class __.

Detail shown at Pier is applicable when joint is in slab. When slab is continuous over Pier, use groove and deflection joint.

Spacing of grooves to be approximately 8'-0". If lighting standard is used (see Bridge Concuit System), groove shall be located approximately 4'-0" from ℄ light standard. Spacing of deflection joints shall not exceed three groove spaces.

Barrier Delineator size, color, and spacing to be in accordance with the Specifications. Cost of Delineator to be included in the price bid for Median Barrier. Reflective surface of Barrier Delineator in all instances, to be facing oncoming traffic.

All concrete shall be Class A4.

The Contractor shall determine all dimensions and details necessary for installation.

Plan dimensions shown are measured in the respective horizontal and vertical planes. The reinforcing steel shown has been detailed based on a standard 1/4" per foot cross slope. The Contractor shall adjust the reinforcing steel as required for other cross slopes.

All concrete shall be Class A4.

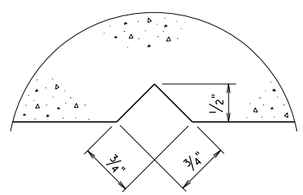

SECTION B-B
Full Scale
Groove detail for both sides of median barrier

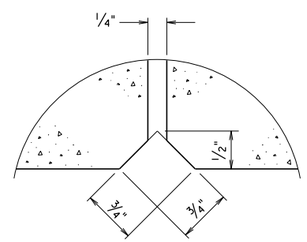

SECTION C-C
Full Scale
Deflection joint detail for both sides of median barrier

ALTERNATE REINFORCING STEEL SCHEDULE

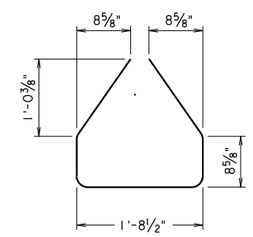

MV0402

Mark	No.	Size	Pin ø	Length	Location
MV0402		#4	3"	5'-5"	Median barrier
ML04		#4	—		Median barrier

Dimensions in bending diagram are out-to-out of bars.

REINFORCING STEEL SCHEDULE

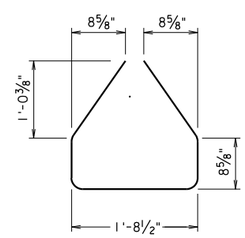

MV0402

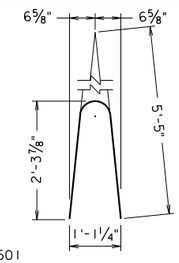

MV0501

Mark	No.	Size	Pin ø	Length	Location
MV0501		#5	7"	5'-1"	Median barrier
MV0402		#4	3"	5'-5"	Median barrier
ML04		#4	—		Median barrier

Dimensions in bending diagram are out-to-out of bars, except as shown.

Gross concrete quantities (C.Y.) = Lin. ft. x 0.121 for all concrete above roadway slab.

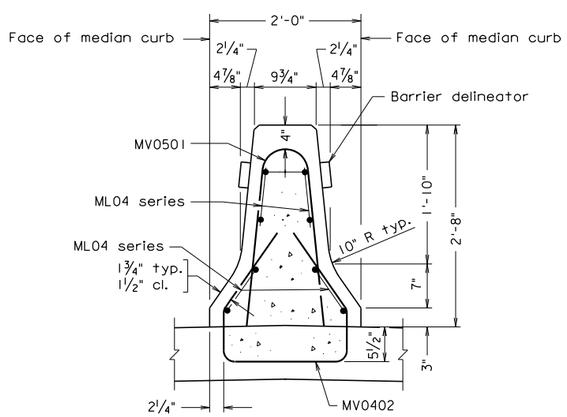

SECTION A-A

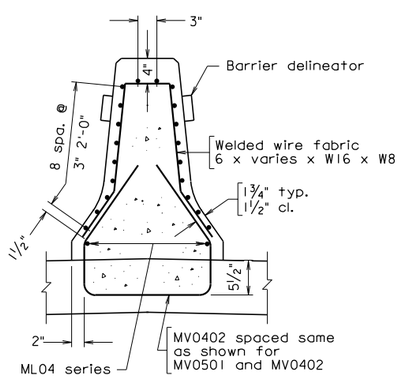

SECTION A-A
ALTERNATE REINFORCING STEEL

Scale: 1" = 1'-0" unless otherwise shown.

© 2012, Commonwealth of Virginia

bmb3a.dgn

12-14-2012

BMB-3A

Sealed and Signed by:
Julius F.J. Volgyi Jr.
Lic. No. 010487
On the date of
December 14, 2012

A copy of the original sealed and signed standard drawing is on file in the Central Office.

VDOT S&B DIVISION
RICHMOND, VA
STRUCTURAL ENGINEER

No.	Description	Date

Revisions

COMMONWEALTH OF VIRGINIA
DEPARTMENT OF TRANSPORTATION

STRUCTURE AND BRIDGE DIVISION

CAST-IN-PLACE CONCRETE MEDIAN BARRIER (F-SHAPE)

Designed: S&B DIV	Date	Plan No.	Sheet No.
Drawn: S&B DIV		BMB-3A	
Checked: S&B DIV			

CAST-IN-PLACE CONCRETE MEDIAN BARRIER

F-SHAPE

NOTES TO DESIGNER:

Standard is used when there is no longitudinal joint in median barrier.

If an initial bituminous overlay is used on the bridge at the time of construction, vertical dimensions and dimensions for reinforcing steel need to be adjusted. The dimensions shown are established from the top of roadway surface. Therefore, for example if a 1" overlay at the median barrier curb is set, the 3" curb dimension and the 2'-8" barrier height would need to be adjusted to 4" and 2'-9" respectively (Section A-A).

It is the Contractor's responsibility to determine the number of reinforcing bars required as well as any details or dimensions. Therefore, these items are to be left blank in the Reinforcing Steel Schedule and Alternate Reinforcing Steel Schedule.

ADD THE FOLLOWING NOTES, DIMENSIONS, DETAILS, ETC. TO STANDARD:

Modify vertical dimensions (3" curb and 2'-8" barrier height) as noted above if an initial overlay is used on bridge.

REINFORCING STEEL SCHEDULE:

Modify bars if needed due to slab depth, cross slope or if an initial overlay is used on bridge.

ALTERNATE REINFORCING STEEL SCHEDULE:

Modify bar MV0402 if needed due to slab depth, cross slope or if an initial overlay is used on bridge.

NOTES:

Complete first note by adding the Class I, II or III of corrosion resistant reinforcing steel required. For additional information on corrosion resistant reinforcing steel (CRR), see Structure and Bridge Division Memorandum (current IIM-S&B-81).