FED. ROAD DIST. NO.	STATE	B.P.R. ROUTE NO.	B.P.R. PROJ. NO.	STATE ROUTE NO.	STATE PROJ. NO.	SHEET NO.	TOTAL SHEETS
14	VA.			230	760		

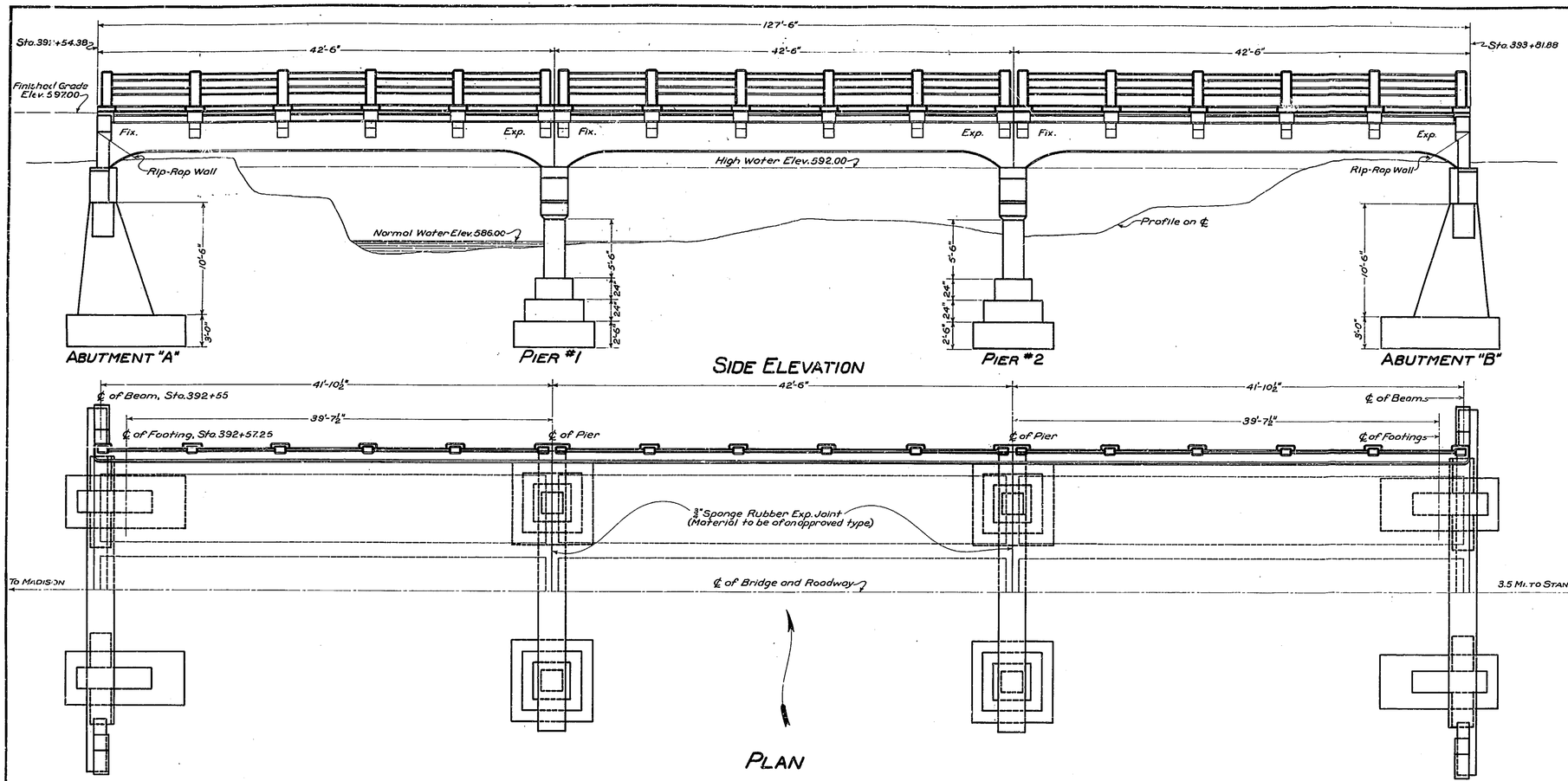

GENERAL NOTE:-

Roadway 24 Ft. Clear, Capacity 15 ton trucks.
Specifications:- Virginia Department of Highways, Bridge Specifications, 1932.
Footings shall extend to firm material and foundations shall be approved by the Engineer.
To provide for variations in elevations of foundations adjustments shall be made in stems of piers and footings of abutments, except where variation for abutments is more than 12", the Bridge Engineer's offices shall be notified.
All concrete shall be Class "A".
Excavation above Elev. 586.00 shall be Classified as "A", below that Elev. as "B".
For further details of superstructure see Standard Plan RC-24-40.
B.M. Nail in Base 18" Wild Cherry 95 Ft. Lt. Sta. 392+15, Elev. 588.90.

ESTIMATED QUANTITIES

	Concrete Cu. Yds. Class "A"	Reinf. Steel Pounds	Excavation Cu. Yds. "A"	Excavation Cu. Yds. "B"
Superstructure:-	177.7	45,735		
Abutment "A" Neat:-	~~155~~ 22.6	~~2,885~~ 2976		
Abutment "A" Foot:-	~~122~~ 13.5		~~38~~ 48	~~72~~ 99
Pier #1:-	~~260~~ 279	~~2,635~~ 2700		~~57~~ 101
Pier #2:-	~~260~~ 282	~~2,635~~ 2730	~~48~~	~~72~~ 109
Abutment "B" Neat:-	~~195~~ 242	~~2,855~~ 3010		
Abutment "B" Foot:-	~~122~~ 14.1		~~38~~ 50	~~72~~ 113
Total:-	~~2943~~ 3082	~~55,575~~ 57,151	~~86~~ 106	~~273~~ 422

COMMONWEALTH OF VIRGINIA

DEPARTMENT OF HIGHWAYS

PROPOSED BRIDGE

OVER MIDDLE RIVER - 3.5 MI. FROM STANDARDSVILLE
STA. 393+20 - ROUTE 230 - PROJ. 760 - GREENE & MADISON COS.
3-42'-6" REINFORCED CONCRETE BEAM SPANS

RECOMMENDED FOR APPROVAL:- M. R. Shelden
BRIDGE ENGINEER

APPROVED:- C. S. Mullins
CHIEF ENGINEER

DRAWN BY:- E.E.B.
TRACED BY:- J.L.D.
CHECKED BY:- W.C.C.

Finals Posted Dec. 12, 1940
RICHMOND, VA.
FEB. 27, 1939
SCALE:- 3/16" = 1'-0"

LXXVII-14
SHEET 1 OF 2

7-1-4

FED. ROAD DIST. NO.	STATE	B.P.R. ROUTE NO.	B.P.R. PROJ. NO.	STATE ROUTE NO.	STATE PROJ. NO.	SHEET NO.	TOTAL SHEETS
14	VA.			230	760	18-A	

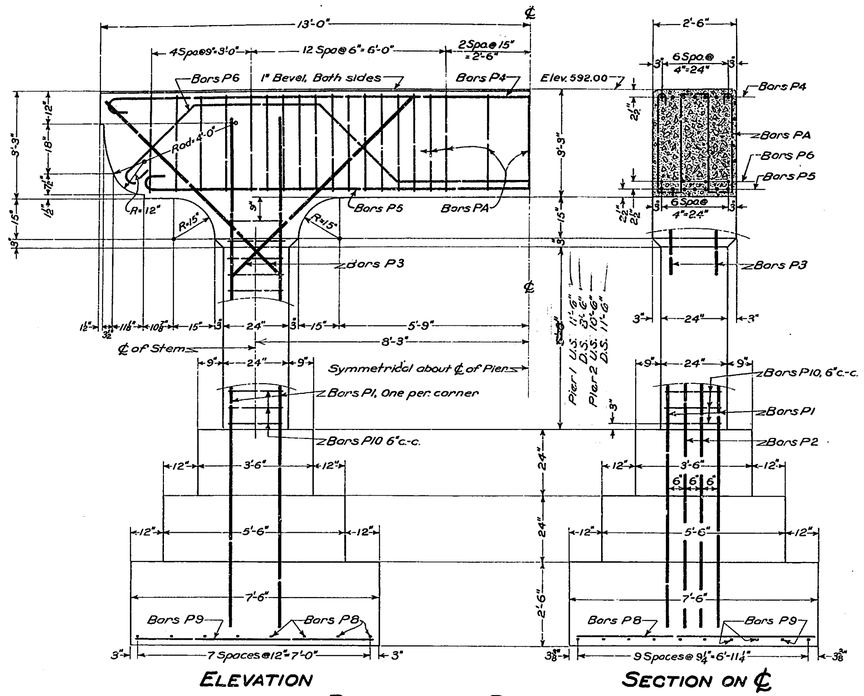

ELEVATION

SECTION ON ℄

DETAILS OF PIERS

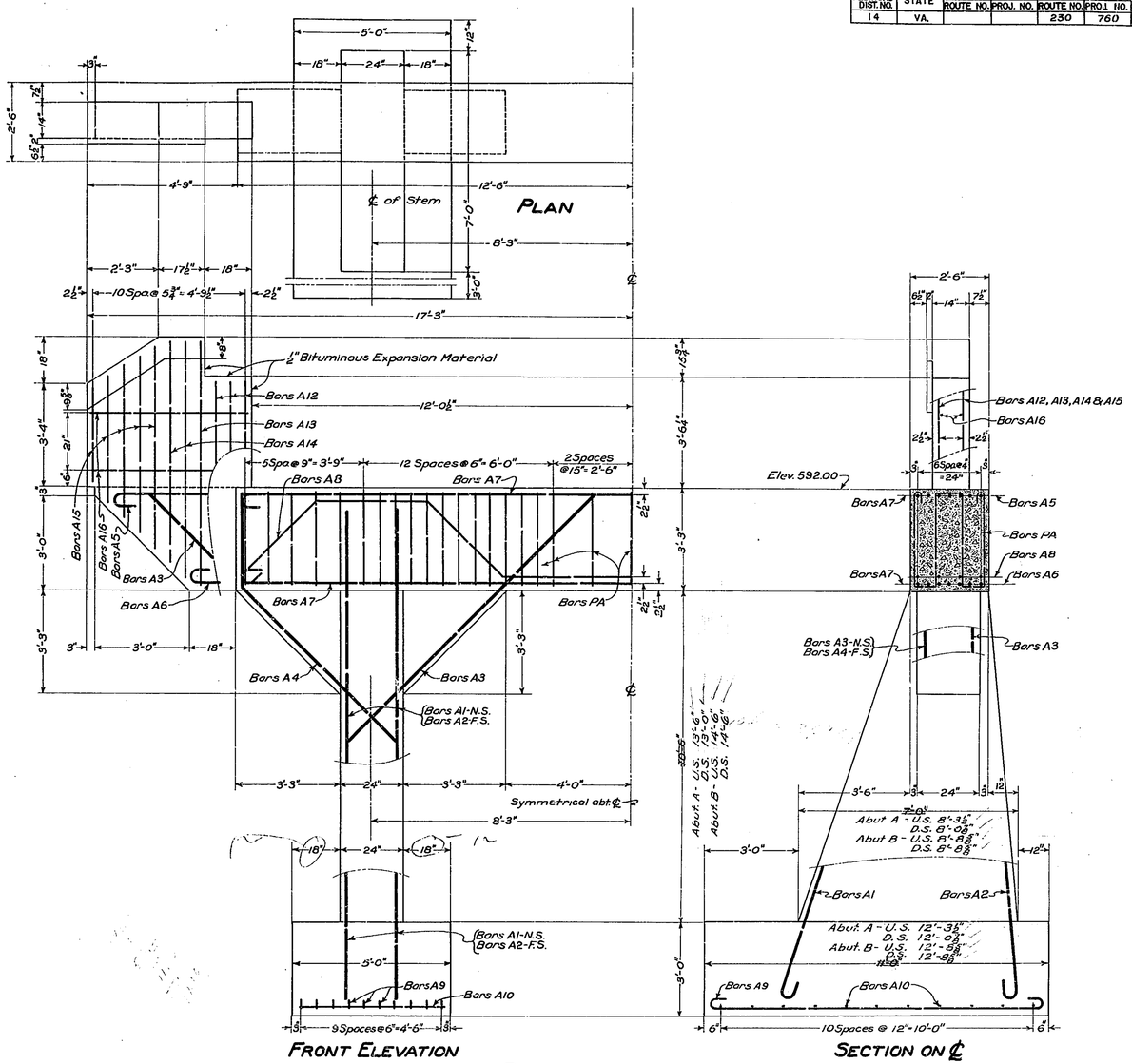

FRONT ELEVATION

SECTION ON ℄

DETAILS OF ABUTMENTS

SCHEDULE OF REINFORCING STEEL

MARK	NO.	SIZE	LENGTH		LOCATION
ABUTMENTS					
A1	8	1"□	17'-6"	Bent	Stems
A2	8	1"□	16'-6"	"	"
A3	12	1"□	11'-0"	Str.	Brackets
A4	4	1"□	9'-9"	Bent	"
A5	10	⅞"φ	34'-3"	"	Beams
A6	10	⅞"φ	29'-3"	"	"
A7	8	⅞"φ	25-11"	"	"
A8	8	¾"φ	29'-10"	"	"
A9	40	⅜"φ	11'-7"	"	Footings
A10	44	½"□	4'-7"	Str.	"
PA	78	½"□	14'-7"	Bent	Beam Stirrups
A12	24	½"□	6'-5"	Str.	Wings
A13	8	½"□	7'-9"	"	"
A14	16	½"□	7'-1" and 7'-7"	"	"
A15	40	½"□	3'-2" to 6'-6"	"	"
A16	16	½"φ	4'-10"	"	"
PIERS					
P1	16	1"□	15'-9"	Str.	Stems
P2	16	1"□	10'-0"	"	"
P3	16	1"□	7'-9"	"	Brackets
P4	14	⅞"φ	26'-11"	Bent	Beams
P5	14	⅞"φ	24'-7"	"	"
P6	8	¾"φ	28'-6"	"	"
PA	74	½"□	14'-7"	"	Beam Stirrups
P8	32	½"□	7'-2"	Str.	Footings
P9	40	½"□	7'-2"	"	"
P10	52	½"φ	7'-0"	Bent	Stems

BENDING DIAGRAM

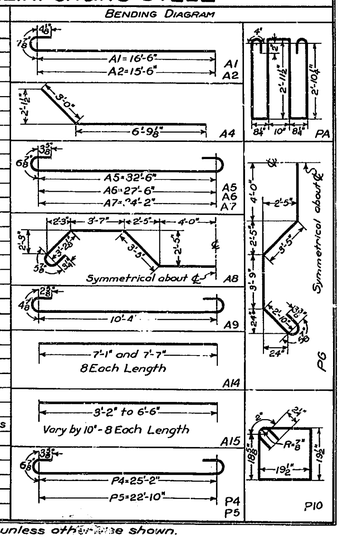

All bends to be with a radius of 2½ diameters unless otherwise shown.

DRAWN BY:- C.C.B.
TRACED BY:- J.L.D.
CHECKED BY:- W.C.C.

MIDDLE RIVER
SUBSTRUCTURE DETAILS & STEEL SCHEDULE

VIRGINIA DEPARTMENT OF HIGHWAYS
OFFICE OF THE BRIDGE ENGINEER
FEBRUARY 27, 1939 RICHMOND, VA.

SCALE ½" = 1'-0" 22 of 2 LXXVII-14 SHEET ~~2 of 2~~

7-1-46