DIST. NO.	STATE	ROUTE NO.	PROJ. NO. ROUTE NO.	PROJ. NO.	SHEET NO.
2	VA.		460 & 13	0013-064-102-B601	

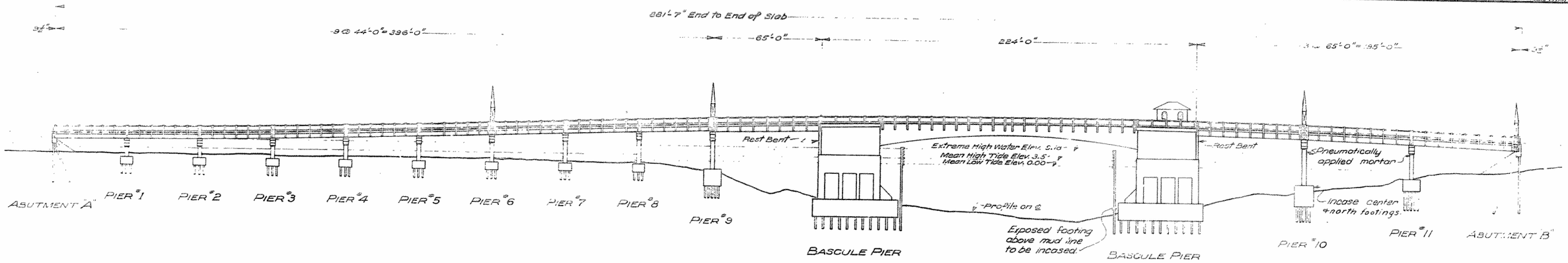

SIDE ELEVATION

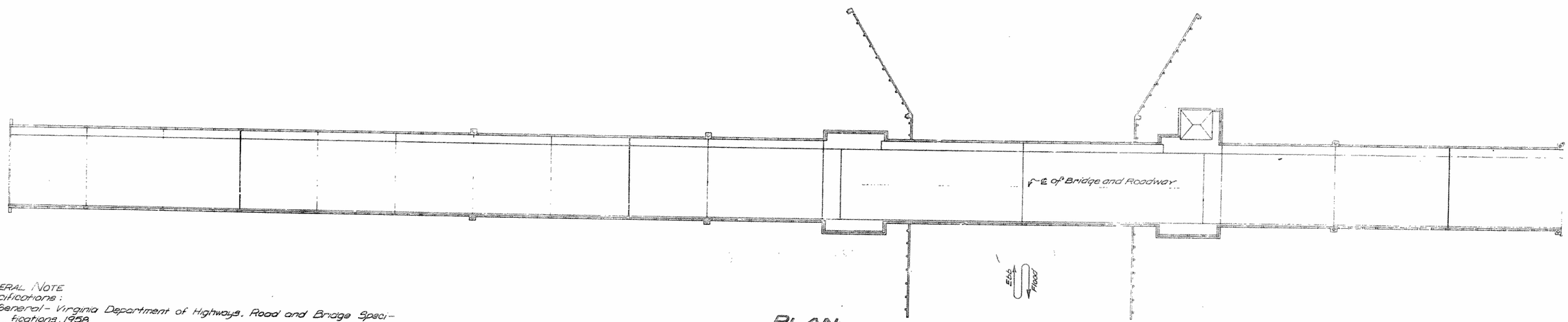

PLAN

GENERAL NOTE
Specifications:

General - Virginia Department of Highways, Road and Bridge Specifications, 1958.

This contract shall consist of:

1. Incasing the eroded portion of the Bascule Pier, Norfolk side, south footing with tremie concrete from 1" [illegible] line to 18" above the top of footing. This work includes incasing the structural steel frame as shown on sheet #3.
2. Incasing north and center footings of Pier #10 from mud line to 18" above the top of the footings.
3. Pneumatically applied mortar repairs to 5" diameter hole in center stem of Pier #10 and to 12" x 24" honeycomb area in center stem of Pier #11.

Bid shall be submitted as "Lump Sum" plus Unit Price per cu. yd. of tremie concrete and "Structural Steel - Lump Sum."

Unit price per cu. yd. of tremie concrete shall include cost of concrete, metal forms, wire mesh, reinforcing steel, labor, material and other incidentals necessary for placing tremie concrete as detailed.

"Structural Steel - Lump Sum" shall be the cost in place of structural steel as detailed on sheet #3.

"Lump Sum" shall include mobilization and demobilization of labor and equipment and material not included in Unit Price item; also the small amount of pneumatically applied mortar necessary for the repairs to the center stem of Pier #10 and Pier #11.

ACTUAL
~~ESTIMATED~~ QUANTITIES

Tremie Concrete	48.9 Cu. Yds. 68.0
Structural Steel	88.5 Lbs.
Mobilization and demobilization	Lump Sum
Lump Sum	

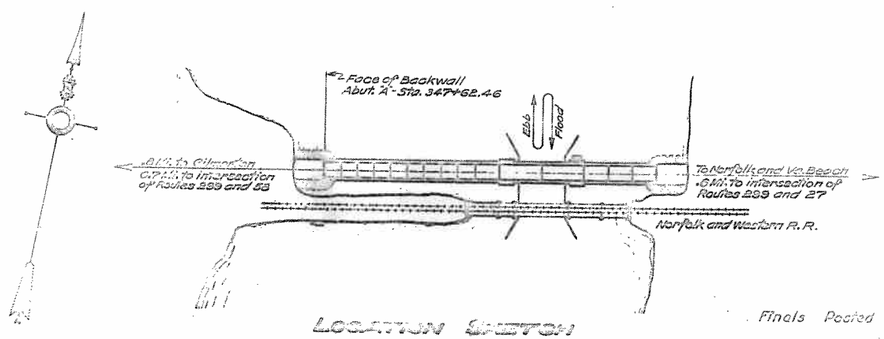

LOCATION SKETCH

COMMONWEALTH OF VIRGINIA
DEPARTMENT OF HIGHWAYS
SUBSTRUCTURE REPAIRS TO BRIDGE
OVER SOUTHERN BRANCH OF ELIZABETH RIVER AT GILMERT
RTE. 460 & 13 PROJ. 0013-064-102-B-601-NORFOLK CO.
1-125'-0" CLEAR DOUBLE LEAF BASCULE SPAN
9-43'-0" AND 4-64'-0" STEEL BEAM SPANS
RICHMOND, VA.

Recommended for Approval: J. M. [illegible] Bridge Engineer

Recommended for Approval: [illegible] 1-4-60 Assistant Chief Engineer

Approved: [illegible] Deputy Commissioner and Chief Engineer

Finals Posted by Suffolk Dist. July 25, 1961

Drawn by: E.H.J.
Traced by:
Checked by: J.E.A.

Scale: 1/8" = 1'-0"

Date: December 29, 1959

LXV

FED. RD. REGION	STATE	FEDERAL AID ROUTE	FEDERAL AID PROJECT	STATE ROUTE	STATE PROJECT	SHEET NO.	TOTAL SHEETS
2	Va			460	0013-064-102-B601		

Note:
Clean top of footing and exposed sides of all mud, marine growth and any loose or deteriorated concrete. Place forms and pour tremie concrete to height shown. Metal forms are to remain in place

Note:
Chip out areas indicated to sound concrete and patch using pneumatically applied mortar.

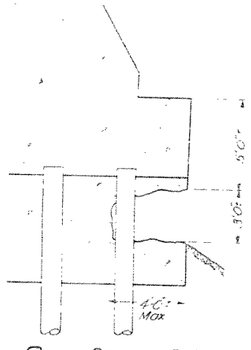

PART SECTION B-B

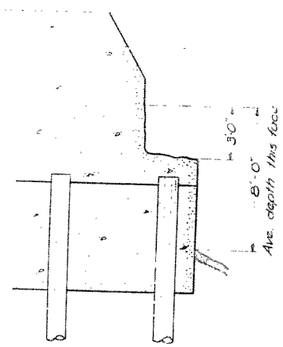

PART SECTION A-A

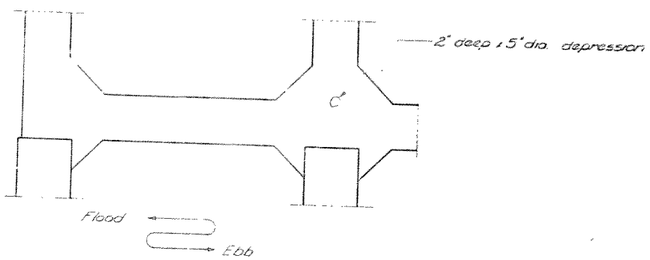

PART ELEVATION AT HORIZONTAL STRUT

PIER 10
Scale: 1/4" = 1'-0"

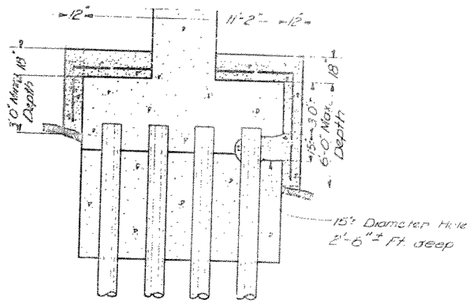

PART SECTION D-D

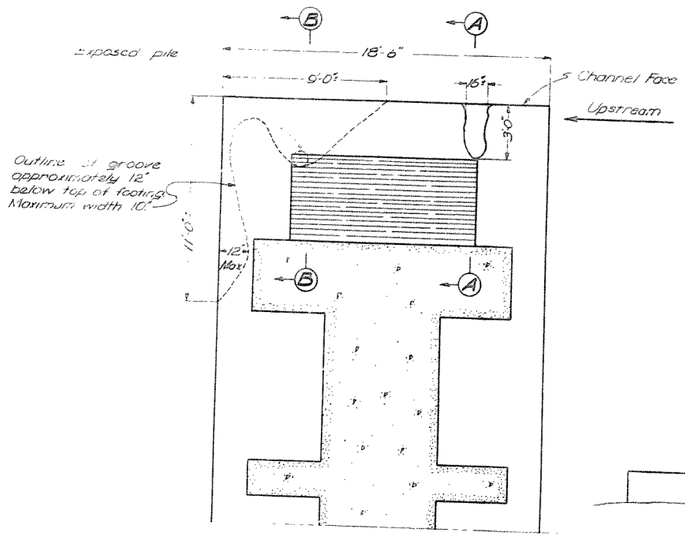

BASCULE PIER - NORFOLK SIDE
PART SECTION - SOUTH FOOTING
See Sheet No. 3 For Repair Details

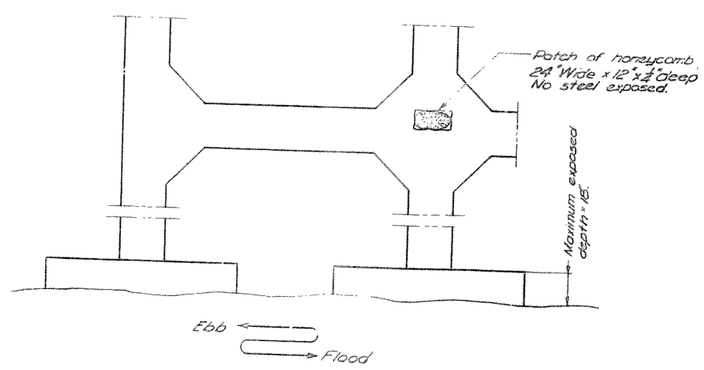

PART ELEVATION AT HORIZONTAL STRUT

PIER 11
Scale: 1/4" = 1'-0"

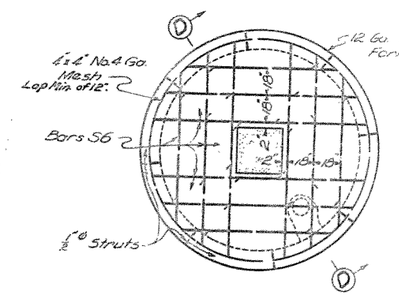

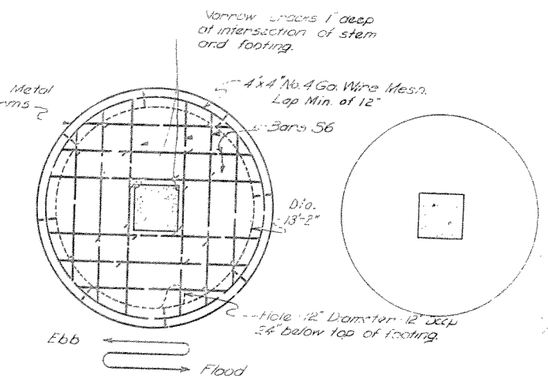

SECTION OF PIER 10 ABOVE FOOTINGS
Encase two footings as shown.

Note:
Record of deterioration as revealed by an underwater inspection made in 1958.

Note: For accurate detail of repairs to Bridge, See Inspector's Sketch Book.

Drawn by: E.N.J.
Traced by: E.W.S.
Checked by: J.E.A.

GILMERTON BRIDGE
SUBSTRUCTURE REPAIRS

Virginia Department of Highways
Office of the Bridge Engineer
Richmond, Va. December, 1959

Scale: 1/4" = 1'-0"

LXV-[illegible]

FED. RD. REGION	STATE	FEDERAL AID ROUTE	FEDERAL AID PROJECT	STATE ROUTE	STATE PROJECT	SHEET NO.	TOTAL SHEETS
3	Va			460,13	0013-064-102-B-601		

Note: The 12 Ga metal form may be tied to the structural frame for support. Metal form is to remain in place.

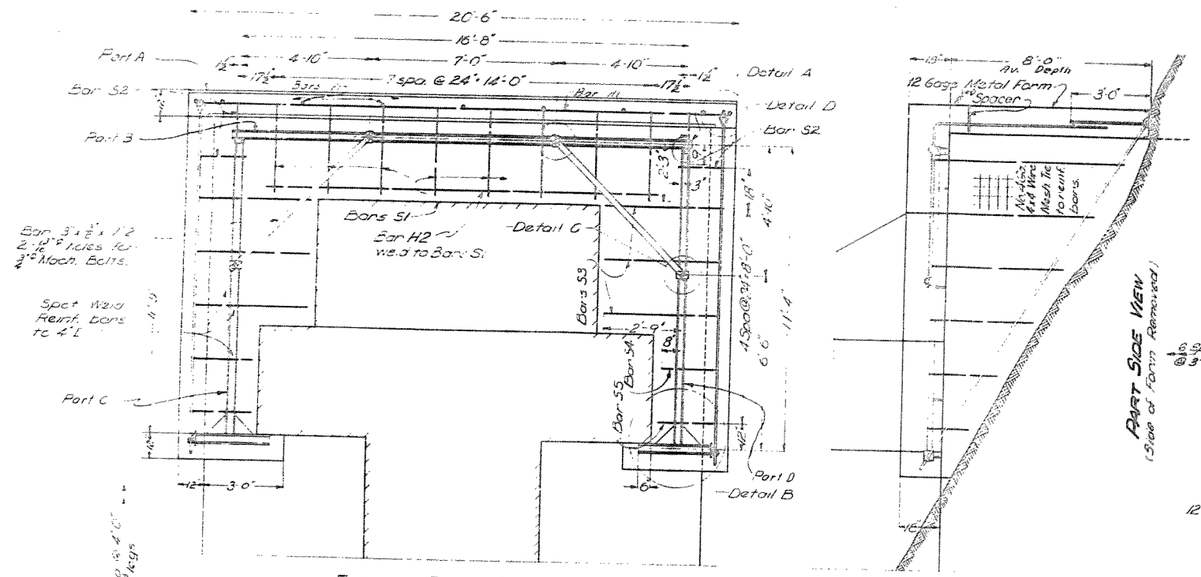

BASCULE PIER - NORFOLK SIDE
PART SECTION - SOUTH FOOTING CHANNEL SIDE

PART SIDE VIEW
(Side of Form Removed)

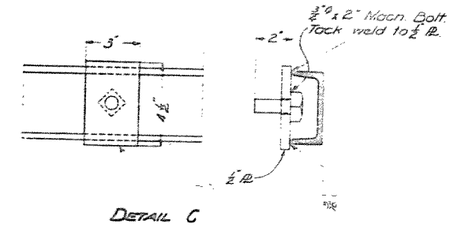

DETAIL C

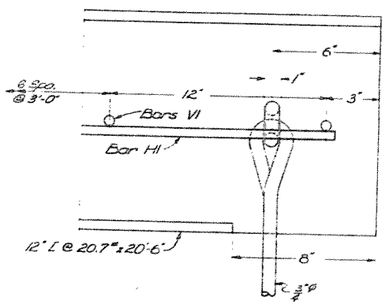

DETAIL D

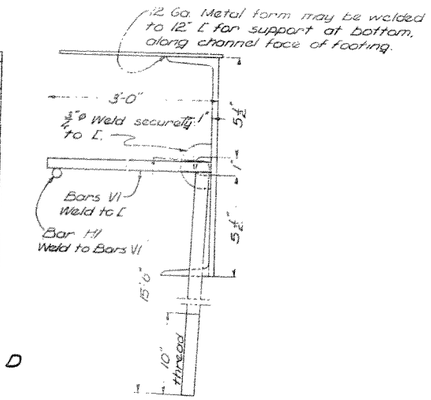

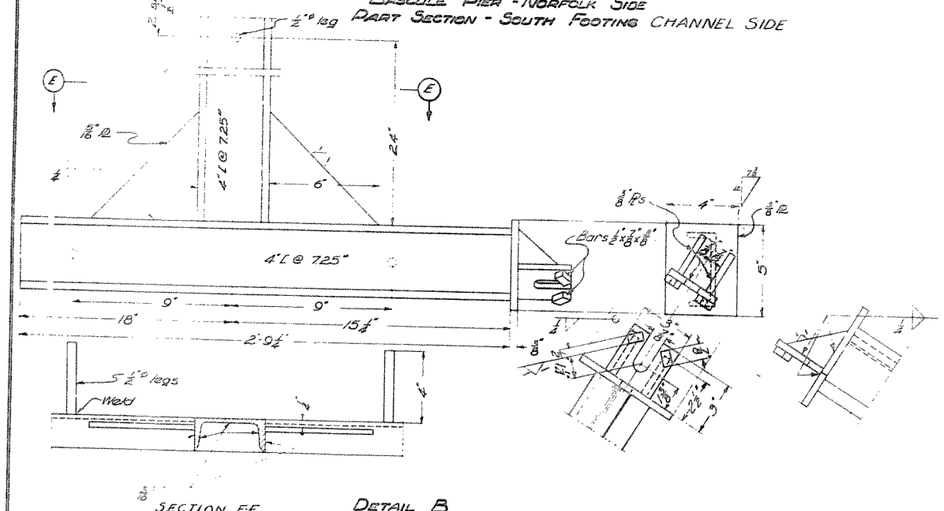

SECTION EE

DETAIL B

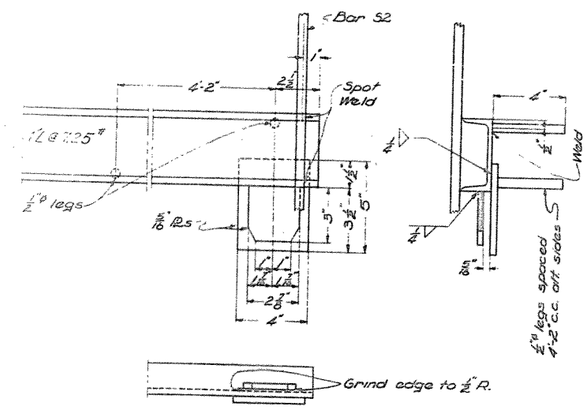

DETAIL A

REINFORCING STEEL SCHEDULE					
Mark	No.	Size	Length	Pin	Location
S1	8	#4	10'-2"	2"φ	Bascule Pier Foot.
S2	4	#4	8'-8"	"	" "
S3	6	#4	8'-2"-10'-2"	"	" "
S4	2	#4	4'-7"	"	" "
S5	2	#4	3'-7"	"	" "
H1	1	#4	20'-1"	—	" "
H2	1	#4	14'-6"	—	" "
V1	9	#4	3'-0"	—	" "
S6	48	#4	13'-11"	2"φ	Pier 10 Footings

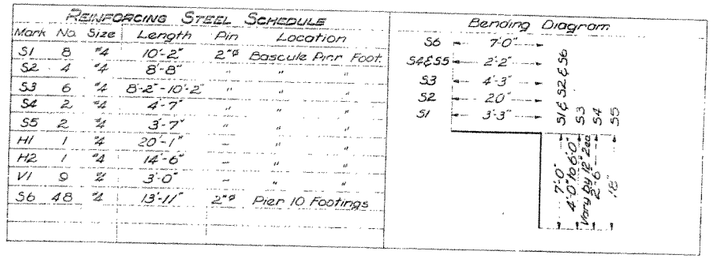

Note:
Portions of footing to be encased in concrete to be cleaned of all mud, marine growth and any loose or deteriorated concrete.
The structural steel frame is for the purpose of tying the tremie concrete to the faces of the footing.
The frame is to be fabricated in four parts complete with reinforcing steel welded in place. The parts are as follows:
Part A - 12" [piece across end of footing and resting on bottom.
Part B - 4" [piece across end of footing and resting on top of footing.
Parts C+D - 4" [pieces on each side of footing and resting on top of footing.
The parts are placed separately and the frame assembly is to be completed under water.

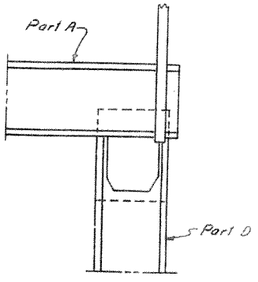

ASSEMBLY OF PART A TO PART D

Drawn by: E.H.J.
Traced by: E.W.S.
Checked by: J.E.A.

GILMERTON BRIDGE
SUBSTRUCTURE REPAIRS

Virginia Department of Highways
Office of the Bridge Engineer
Richmond, Va. December, 1959

Scale: 3/8" = 1'-0"

LXV-50