UNION METAL INDUSTRIES CORP.

CERTIFICATION

March 1, 2019
Mr. Jon J Bondanella, PE
V.P. Engineering and Sales
Traffic Systems & Technology
10110 Battleview Pkwy, Suite 100
Manassas, VA 20109

Subject: Round Tapered Steel Traffic Control Structures
UMC Quote No. VA-62118-1
VDOT Mast Arm Standards

Dear Mr. Bondanella,

Union Metal Industries Corporation hereby certifies that all structures for the above referenced project per UMC Drawings 50700-B2141 R2.1, 50700-B2142 R2.1, 50700-B2143 R2.1, 21-B41 R3.3, & 1007964 R0 are in accordance with the 2013 AASHTO, appendix C, with 2015 interim revisions, "Standard Specifications for Structural Supports for Highway Sign, Luminaries, and Traffic Signals" for 90 MPH wind speeds as indicated on the drawings and calculations. The designs were completed in accordance with the 2016 Road and Bridge Specifications of the Virginia Department of Transportation, section 700, special provisions for section 700, drawing MP-3, and IIM-S&B-90.2.

Respectfully,

Nick Gallucci

COMMONWEALTH OF VIRGINIA
DAVID N. FRITZ
Lic. No. 040948
3/1/19
PROFESSIONAL ENGINEER

1432 Maple Avenue N. E., Canton, OH 44705 (234) 999-4533

CLAMP DATA (B85 SERIES)	
SIZE	POLE DIAMETER RANGE
3	3.10" – 3.60"
4	3.61" – 4.40"
4.5	4.41" – 5.00"
5	5.01" – 5.95"
6	5.90" – 6.75"
7	6.70" – 8.05"
8	7.90" – 9.10"
9	9.00" – 10.40"
10	10.00" – 11.15"
11	11.00" – 11.85"
12	11.70" – 13.40"
13	13.00" – 14.15"
14	14.00" – 15.15"
15	15.00" – 16.25"
16	16.00" – 17.25"
17	17.00" – 18.25"
18	18.00" – 19.25"
19	19.00" – 20.25"
20	20.00" – 21.25"

TO BE SPECIFIED WITH PURCHASE ORDER (SEE ORDERING INSTRUCTIONS)

STRUCTURE FINISH DATA	
CODE	FINISH DESCRIPTION
B	UNFINISHED
G	HD GALVANIZED
V	HD GALVANIZED & FINISH PAINT
R	HD GALVANIZED & POWDER COAT

TO BE SPECIFIED WITH PURCHASE ORDER (SEE ORDERING INSTRUCTIONS)

ORDERING INSTRUCTIONS:

FOR U-BOLT CLAMPS: (EXAMPLE) IF A 18' LUMINAIRE ARM WITH 5'-0" RISE WITH SIZE 9 CLAMP AND A GALVANIZED FINISH IS REQUIRED, THEN ORDER: 21-B41-Y1-9G

FOR BACK TO BACK CLAMPS: (EXAMPLE) IF ORDERING A 24' LUMINAIRE ARM WITH 5'-0" RISE SPECIFY DIAMETER OF TUBE @ TOP CLAMP LOCATION AND A GALVANIZED FINISH IS REQUIRED, THEN ORDER: 21-B41-Y3-10.75G

DESIGN CRITERIA:

1. DESIGNED FOR 90 MPH WIND ZONE IN ACCORDANCE WITH 2013 AASHTO APPENDIX C WITH 2015 INTERIM REVISIONS "STANDARD SPECIFICATIONS FOR STRUCTURAL SUPPORTS FOR HIGHWAY SIGNS, LUMINAIRES AND TRAFFIC SIGNALS", VDOT 2016 ROAD AND BRIDGE SPECIFICATIONS, SPECIAL PROVISIONS FOR SECTION 700, AND IIM-S&B-90.2.
2. MAX PROJECTED AREA = 3.3 sq ft & MAX WEIGHT = 75 lbs
3. **VERIFY THE POLE ON WHICH THE LUMINAIRE WILL BE MOUNTED CAN ACCOMODATE THE ADDITIONAL LOADING.**

MATERIAL SPECIFICATIONS	
PIPE	ASTM A53 GR B, A500 GR B, or A500 GR C
BAR STRUT	ASTM-A529 GR 50
U-BOLT CLAMP	ASTM A1011 GR 50
U-BOLT	ASTM A36
CONNECTION NUTS	ASTM A563 GR A
BACK TO BACK CLAMP	ASTM A1018 GR 50
CONNECTION BOLT	ASTM-A307
CONNECTION WASHERS	ASTM-F436
LOCK NUTS	ASTM A563 GR DH
STRUCTURE FINISH	PER SALES ORDER
HARDWARE FINISH	ASTM A153

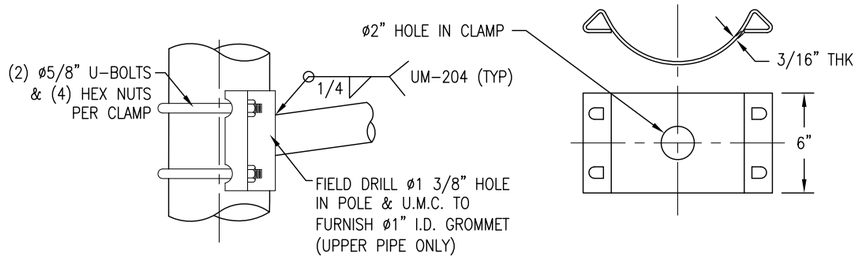

U-BOLT LUMINAIRE ARM CONNECTION DETAIL
(REF B85 SERIES)
Y1 & Y2 ONLY

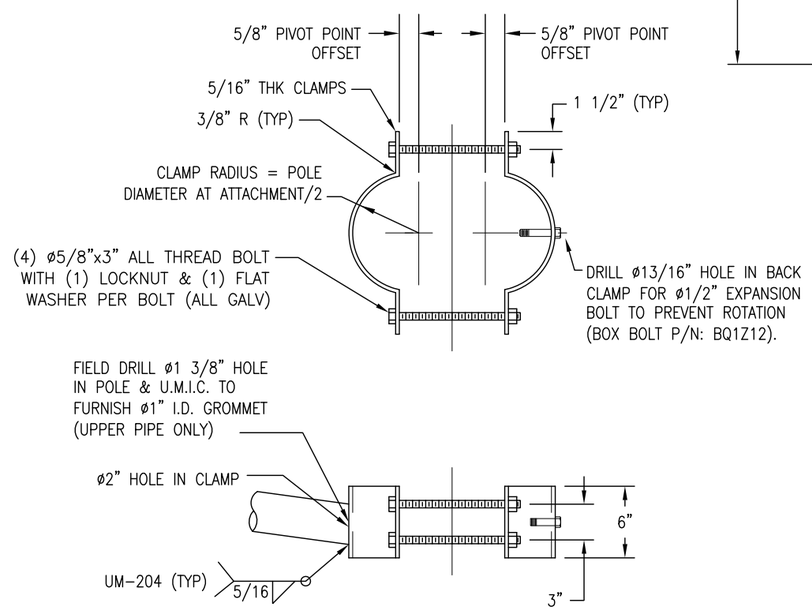

BACK TO BACK LUMINAIRE ARM CONNECTION DETAIL
Y3 ONLY

LUMINAIRE ARM DATA												
QTY	DESIGN NO.	ARM SPREAD	PIPE #1 SIZE	PIPE #2 SIZE	PIPE #3 SIZE	PIPE #4 SIZE	D1	D2	X1	X2	X3	CLAMP TYPE
	21-B41-Y1	18'-0"	–	2 1/2" SCH 40	2 1/2" SCH 40	–	–	3'-6"	–	2'-0"	6'-0"	U-BOLT
	21-B41-Y2	15'-0"	–	2 1/2" SCH 40	2 1/2" SCH 40	–	–	–	–	3'-5"	–	U-BOLT
	21-B41-Y3	24'-0"	2 1/2" SCH 40	–	2 1/2" SCH 40	3" SCH 80	7'-1"	12'-5"	2'-0"	6'-6"	11'-11"	BACK TO BACK

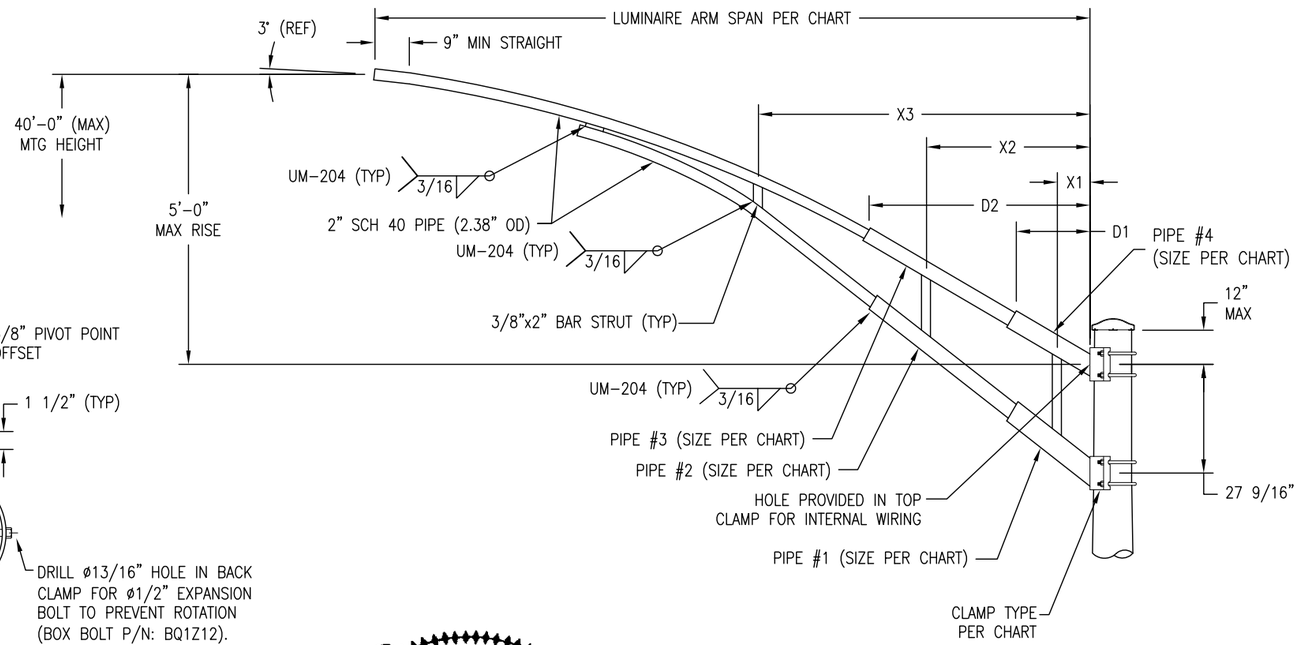

VIRGINIA DEPARTMENT OF TRANSPORTATION
C.O. STRUCTURE AND BRIDGE
REVIEW OF WORKING DRAWINGS

Working drawings have been reviewed in accordance with Section 105.10 of the Specifications with the following comments.

☒ Reviewed ☐ Revise and Resubmit

☐ Reviewed as Noted

Reviewed by: Karl Larson 4/22/2019

REV	DESCRIPTION	DATE	REV BY	CHK BY
R3.1	UPDATED TO UMIC STANDARDS	9/24/18	MJM	KS
R3	ADDED ORDERING INSTRUCTIONS FOR Y3 DESIGN, ADDED BACK TO BACK CLAMP, BAR STRUT, FLAT WASHER, LOCK NUT, & CONNECTION BOLT MATERIAL SPECIFICATION, PIVOT POINT OFFSET WAS 1/2".	2/24/17	RLD	MSW
R2	ADDED SIZE CHART FOR PIPE SIZES. ADDED BACK TO BACK CLAMP DETAIL.	2/3/17	JEF	TAS
R1	ADDED DESIGN –Y2; REMOVED NOM RISE, ADDED 5'-0" MAX RISE	10/5/16	AJO	JMW

REVISIONS

PROJECT INFORMATION	
CONTRACT ID NUMBER	
PROJECT NAME	
VDOT REGION	
VDOT DISTRICTS	
DESIGN WIND SPEED	

STATE: VA | REQ# / SO# : VA 58322-3

PROJECT NAME:

CLAMP-ON TRUSS LUMINAIRE ARM
FOR VIRGINIA DEPARTMENT OF TRANSPORTATION

UNION METAL INDUSTRIES CORPORATION

This document and the contents herein are proprietary and the property of Union Metal Industries. This document is not to be, copied, reproduced, or used for any reason except for the purposes which it was issued without the express written consent of Union Metal Industries. Furthermore Union Metal Industries reserves the right to recall this document and all copies at any time for any reason.

DESIGNED BY	CHECKED BY	DATE	SCALE	ENG REF
AJO	JMW	8/11/16	NTS	21-B36
21-B41			REVISION R3.3	SHEET 1 OF 1

Hardcopies of this document are considered uncontrolled and are to be used for reference only. Those using this document for reference must take all precautions available to ensure that this document matches the current revision maintained in digital format, within but a single source and protected by edit restrictions.

Hardcopies of this document are considered uncontrolled and are to be used for reference only. Those using this document for reference must take all precautions available to ensure that this document matches the current revision maintained in digital format, within but a single source and protected by edit restrictions.

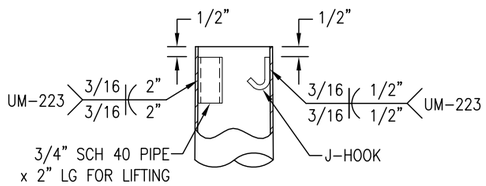

TOP OF POLE DETAIL
ORIENTATION OF PIPE & J-HOOK AS REQUIRED

QTY	UMIC DESIGN NUMBER	POLE TYPE	POLE HEIGHT (B)	POLE SHAFT DATA												ARM CONNECTION DATA							
				WALL THICKNESS (in)	LARGE DIAMETER (in)	SMALL DIAMETER (in)	SHAFT LENGTH (ft)	WELD TYPE	A. BOLT QTY.	BC (in)	S (in)	F (in)	P (in)	BPL (in)	øCB (in)	GUSSET THK G (in)	X (in)	Y1 (in)	Y2 (in)	W (in)	H (in)	PPL (in)	BOLT ø (in)
	50700-B2141-Y1	A-6	19'-6"	.25 (3 GA)	17.00	14.27	19.50	SOCKET	6	22.00	28.00	11.00	10.00	2.00	–	0.312	20.00	10.00	18.00	24.50	22.50	1.50	1.50
	50700-B2141-Y2	A	19'-6"	.25 (3 GA)	17.00	14.27	19.50	SOCKET	8	24.00	30.00	9.18	10.00	2.00	–	0.312	20.00	10.00	18.00	24.50	22.50	1.50	1.50
	50700-B2141-Y3	B1	19'-6"	.31 (0 GA)	20.75	18.02	19.50	FP	8	27.50	33.50	10.52	10.50	2.50	18.00	0.500	25.50	12.00	20.00	30.00	24.50	2.25	1.50
	50700-B2141-Y4	B2	19'-6"	.31 (0 GA)	22.00	19.27	19.50	FP	8	27.50	33.50	10.52	10.50	2.50	18.00	0.500	25.50	12.00	20.00	30.00	24.50	2.25	1.50
	50700-B2141-Y5	D-6	25'-0"	.25 (3 GA)	17.00	13.50	25.00	SOCKET	6	22.00	28.00	11.00	10.00	2.00	–	0.312	20.00	10.00	18.00	24.50	22.50	1.50	1.50
	50700-B2141-Y6	D	25'-0"	.25 (3 GA)	17.00	13.50	25.00	SOCKET	8	24.00	30.00	9.18	10.00	2.00	–	0.312	20.00	10.00	18.00	24.50	22.50	1.50	1.50
	50700-B2141-Y7	E1	25'-0"	.31 (0 GA)	20.75	17.25	25.00	FP	8	27.50	33.50	10.52	10.50	2.50	18.00	0.500	25.50	12.00	20.00	30.00	24.50	2.25	1.50
	50700-B2141-Y8	E2	25'-0"	.31 (0 GA)	22.00	18.50	25.00	FP	8	27.50	33.50	10.52	10.50	2.50	18.00	0.500	25.50	12.00	20.00	30.00	24.50	2.25	1.50

FP = FULL PEN. WELD. SEE DETAIL.

3 GA = 0.250" WALL THICKNESS
0 GA = 0.313" WALL THICKNESS
E = ROUND TAPERED STEEL TUBE @ 0.14 in/ft TAPER

ORDERING INFORMATION: SPECIFY OPTIONS BELOW WHEN ORDERING

DESIGN NUMBER
H = 6"x10" HHF WITH HINGED COVER
T = TERM. COMP. W/ 4"x6 1/2" HHF
STRUCTURE FINISH
G = GALVANIZE
R = GALVANIZE AND POWDER COAT

50700-BXXX-YX-H-G

DESIGN CRITERIA:

1. DESIGNED FOR 90 MPH WIND ZONE IN ACCORDANCE WITH 2013 AASHTO APPENDIX C WITH 2015 INTERIM REVISIONS "STANDARD SPECIFICATIONS FOR STRUCTURAL SUPPORTS FOR HIGHWAY SIGNS, LUMINAIRES AND TRAFFIC SIGNALS" TO SUPPORT FIXED LOADS WITH AREAS SHOWN AND VDOT 2016 ROAD AND BRIDGE SPECIFICATIONS, SPECIAL PROVISIONS FOR SECTION 700, AND IIM-S&B-90.2.
2. THE MAXIMUM DISTANCE BETWEEN THE BOTTOM OF THE LEVELING NUT AND THE TOP OF THE FOUNDATION SHALL BE ONE INCH (1").
3. ANCHOR BOLT ANALYZED FOR STEEL STRENGTH ONLY. THE ANCHOR BOLT EMBEDMENT LENGTH SHOWN ON THIS DRAWING SHALL BE VERIFIED BY THE FOUNDATION ENGINEER.
4. REFER TO VDOT SPECIFICATIONS REGARDING CONNECTION AND TIGHTENING OF ANCHOR BOLT HARDWARE.
5. CUSTOMER TO CONFIRM ALL DIMENSIONS & ORIENTATIONS BEFORE RELEASING ORDER FOR MANUFACTURING.
6. SEE DRAWING 50700-B2143 FOR MAST ARMS.
7. SEE DRAWING 21-B41 FOR LUMINAIRE ARM

MATERIAL SPECIFICATIONS	
TAPERED TUBE	ASTM A595 GR A
PLATE	ASTM A36
BAR HANDHOLE FRAME	ASTM A529 GR 50 or ASTM A572 GR 50 or ASTM A709 GR 50
HANDHOLE COVER	ASTM A1011 or A36
ANCHOR BOLTS	ASTM F1554 GR 55
ANCHOR BOLT NUTS	ASTM A563 GR DH
FLAT WASHERS	ASTM F436 TYPE 1
POLE TOP	ASTM A1011
PIPE	ASTM A53 GR B or A500 GR B
S.S. HARDWARE	AISI-300 SERIES (18-8)
STRUCTURE FINISH	PER SALES ORDER
HARDWARE FINISH	HD GALV TO ASTM A153

VIRGINIA DEPARTMENT OF TRANSPORTATION
C.O. STRUCTURE AND BRIDGE
REVIEW OF WORKING DRAWINGS
Working drawings have been reviewed in accordance with Section 105.10 of the Specifications with the following comments.
☒ Reviewed ☐ Revise and Resubmit
☐ Reviewed as Noted
Reviewed by: Karl Larson 4/22/2019

COMMONWEALTH OF VIRGINIA
DAVID N. FRITZ
Lic. No. 040948
3/1/19
PROFESSIONAL ENGINEER

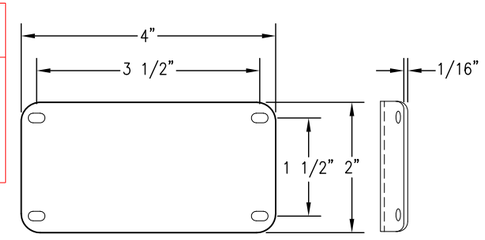

2" x 4" ALUMINUM I.D. TAG WITH (4) SELF TAPPING S.S. #7 x 3/8" SCREWS (4) ø0.136" HOLES DRILLED IN POLE, SECURED TO OUTSIDE OF POLE, ABOVE HANDHOLE & STAMPED WITH THE FOLLOWING INFORMATION:

- UNION METAL IND. CORP.
- DESIGN NUMBER – DATE OF MANUFACTURE
- POLE TYPE – POLE ID NUMBER PER PLANS
- GAUGE, BASE DIAMETER & LENGTH OF POLE
- Fy STEEL OF ANCHOR BOLTS, BASE PLATE & POLE
- ASTM NO., DIAMETER & LENGTH OF ANCHOR BOLTS

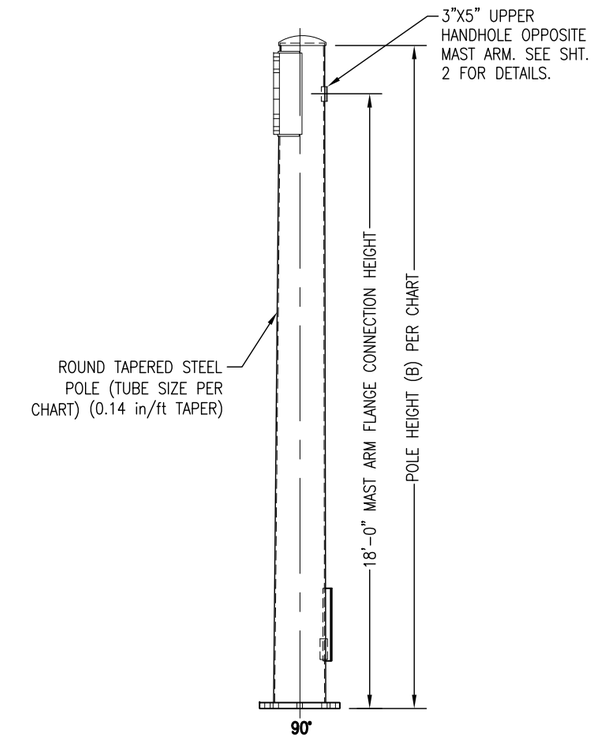

REV	DESCRIPTION	DATE	REV BY	CHK BY
R2	3"x5" HANDHOLE ON POLE TYPES D-6, D, E1, & E2 ONLY	12/14/18	NG	NG
R1	CAULK TOP OF BACKUP RING FOR BUTT ø < 18"	10/17/18	NG	NG

REVISIONS

PROJECT INFORMATION	
CONTRACT ID NUMBER	
PROJECT NAME	

STATE: VA | REQ# / SO# : VA-62118
PROJECT NAME: VDOT STANDARDS

ROUND TAPERED STEEL TRAFFIC CONTROL STRUCTURES (POLES FOR SINGLE MAST ARM) - 90 MPH
FOR VIRGINIA DEPARTMENT OF TRANSPORTATION

UNION METAL INDUSTRIES CORPORATION

This document and the contents herein are proprietary and the property of Union Metal Industries. This document is not to be, copied, reproduced, or used for any reason except for the purposes which it was issued without the express written consent of Union Metal Industries. Furthermore Union Metal Industries reserves the right to recall this document and all copies at any time for any reason.

A regular and periodic system of inspections and maintenance must be performed by qualified technicians to ensure ongoing safety for all UMI pole structures.

DESIGNED BY	CHECKED BY	DATE	SCALE	ENG REF
NMG	KMS	8/16/18	NTS	50700-B1930

50700-B2141 | REVISION R2.1 | SHEET 1 OF 2

Hardcopies of this document are considered uncontrolled and are to be used for reference only. Those using this document for reference must take all precautions available to ensure that this document matches the current revision maintained in digital format, within but a single source and protected by edit restrictions.

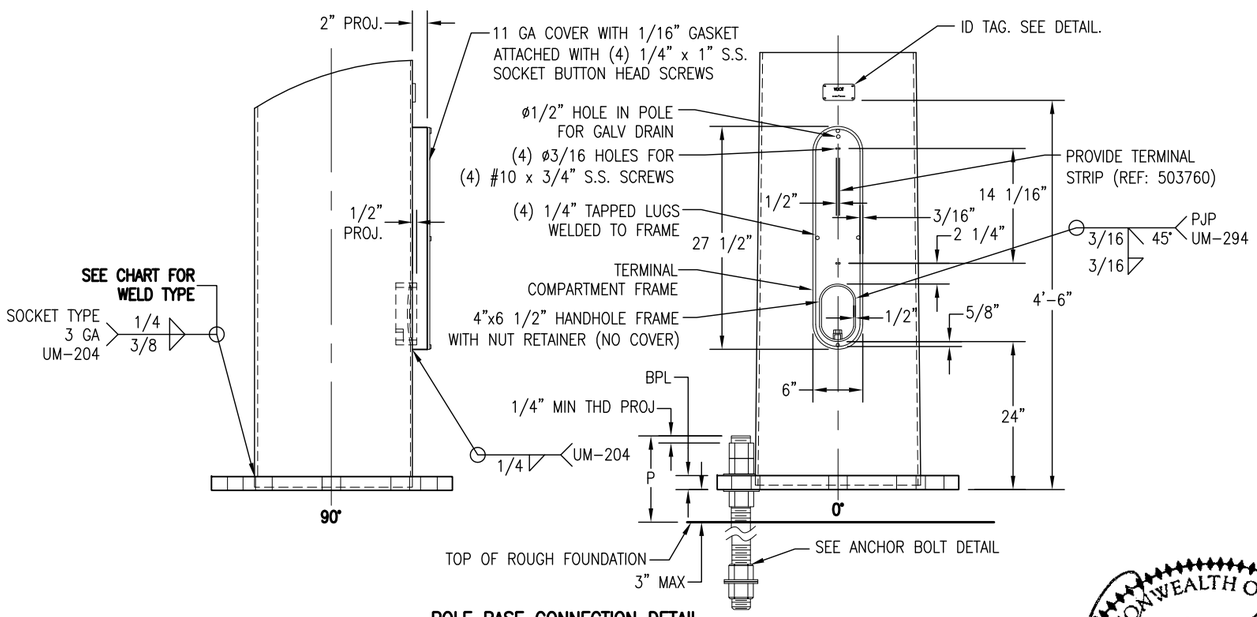

POLE BASE CONNECTION DETAIL
(TERM. COMP. OPTION SHOWN)

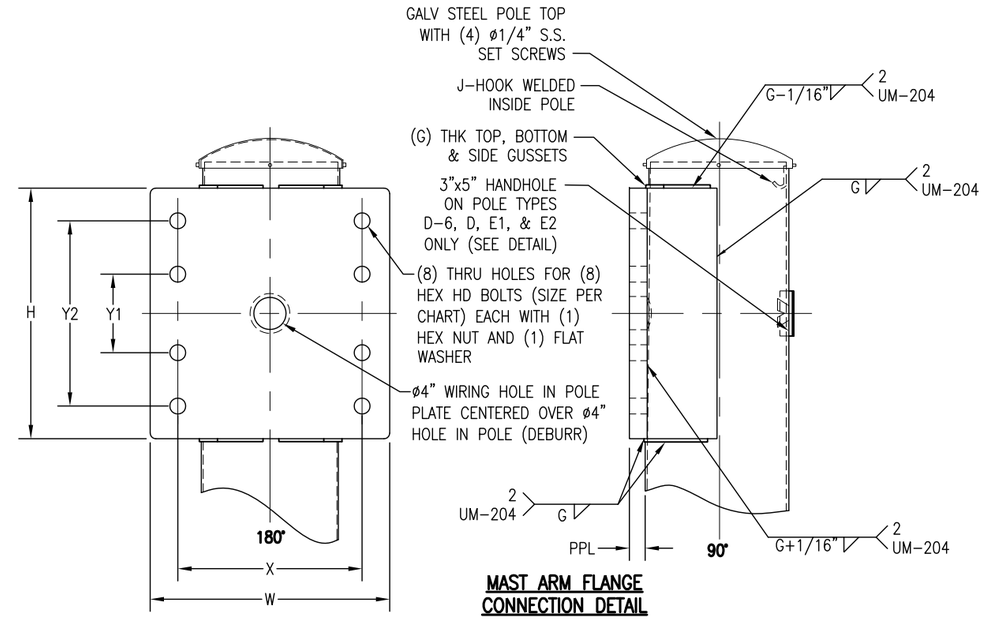

MAST ARM FLANGE
CONNECTION DETAIL

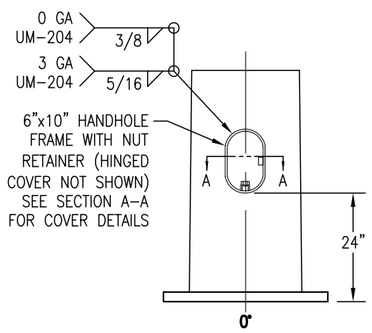

6"x10" HHF W/ HINGED
COVER OPTION

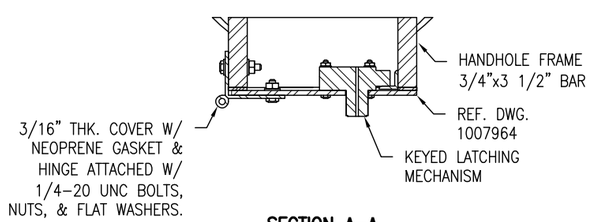

SECTION A-A

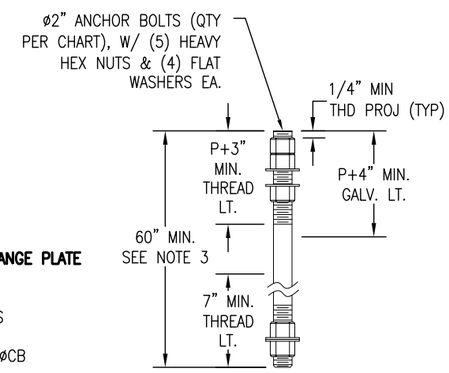

ANCHOR
BOLT DETAIL

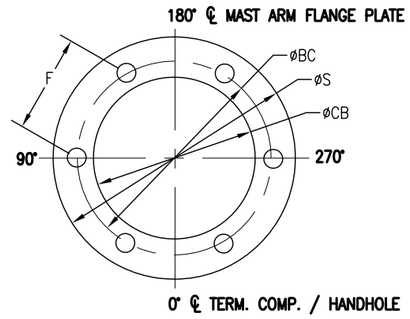

6-BOLT BASE PLATE DETAIL

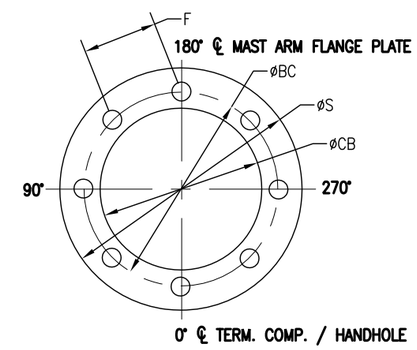

8-BOLT BASE PLATE DETAIL

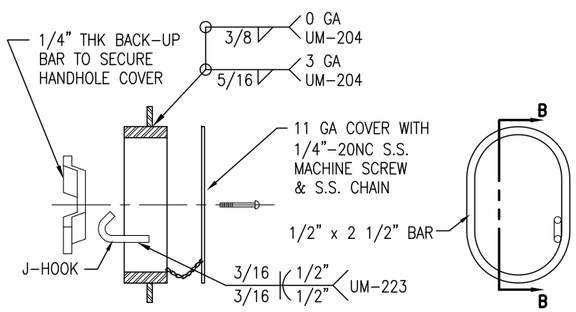

SECTION B-B

FRONT VIEW

3"x5" HANDHOLE FRAME DETAIL

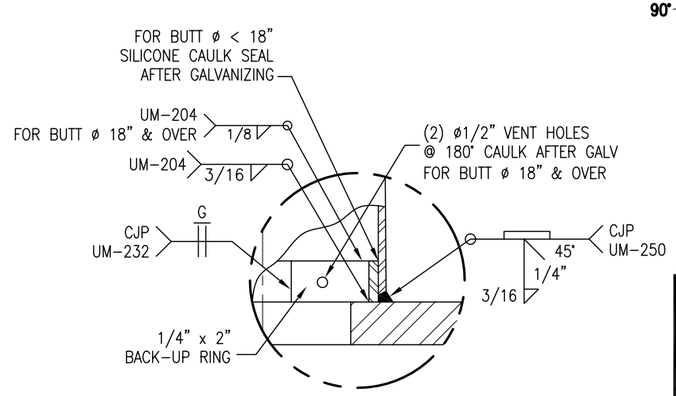

POLE BASE WELD DETAIL
(SEE CHART FOR WELD TYPE)

COMMONWEALTH OF VIRGINIA
DAVID N. FRITZ
Lic. No. 040948
3/1/19
PROFESSIONAL ENGINEER

VIRGINIA DEPARTMENT OF TRANSPORTATION
C.O. STRUCTURE AND BRIDGE
REVIEW OF WORKING DRAWINGS

Working drawings have been reviewed in accordance with Section 105.10 of the Specifications with the following comments.

☒ Reviewed ☐ Revise and Resubmit

☐ Reviewed as Noted

Reviewed by: Karl Larson 4/22/2019

STATE: VA	REQ# / SO# : VA-62118	REV	DESCRIPTION	DATE	REV BY	CHK BY
PROJECT NAME: VDOT STANDARDS			REVISIONS			

ROUND TAPERED STEEL TRAFFIC CONTROL STRUCTURES (POLES FOR SINGLE MAST ARM) - 90 MPH
FOR VIRGINIA DEPARTMENT OF TRANSPORTATION

UNION METAL INDUSTRIES CORPORATION

This document and the contents herein are proprietary and the property of Union Metal Industries. This document is not to be, copied, reproduced, or used for any reason except for the purposes which it was issued without the express written consent of Union Metal Industries. Furthermore Union Metal Industries reserves the right to recall this document and all copies at any time for any reason.

A regular and periodic system of inspections and maintenance must be performed by qualified technicians to ensure ongoing safety for all UMI pole structures.

DESIGNED BY	CHECKED BY	DATE	SCALE	ENG REF
NMG	KMS	8/16/18	NTS	50700-B1930
50700-B2141			REVISION R2.1	SHEET 2 OF 2

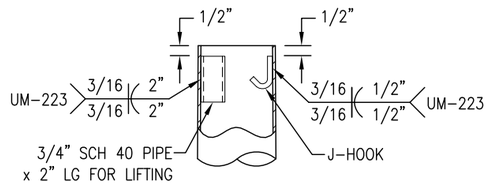

TOP OF POLE DETAIL
ORIENTATION OF PIPE &
J-HOOK AS REQUIRED

QTY	UMIC DESIGN NUMBER	POLE TYPE	POLE HEIGHT (B)	POLE SHAFT DATA												ARM CONNECTION DATA							
				WALL THICKNESS (in)	LARGE DIAMETER (in)	SMALL DIAMETER (in)	SHAFT LENGTH (ft)	WELD TYPE	A. BOLT QTY.	BC (in)	S (in)	F (in)	P (in)	BPL (in)	øCB (in)	GUSSET THK G (in)	X (in)	Y1 (in)	Y2 (in)	W (in)	H (in)	PPL (in)	BOLT ø (in)
	50700-B2142-Y1	C	19'-6"	.31 (0 GA)	22.00	19.27	19.50	FP	8	27.50	33.50	10.52	10.50	2.50	18.00	0.500	25.50	12.00	20.00	30.00	24.50	2.25	1.50
	50700-B2142-Y2	F	25'-0"	.31 (0 GA)	22.00	18.50	25.00	FP	8	27.50	33.50	10.52	10.50	2.50	18.00	0.500	25.50	12.00	20.00	30.00	24.50	2.25	1.50

0 GA = 0.313" WALL THICKNESS
E = ROUND TAPERED STEEL TUBE @ 0.14 in/ft TAPER

FP = FULL PEN. WELD. SEE DETAIL.

ORDERING INFORMATION: SPECIFY OPTIONS BELOW WHEN ORDERING

DESIGN NUMBER
H = 6"x10" HHF WITH HINGED COVER
T = TERM. COMP. W/ 4"x6 1/2" HHF
STRUCTURE FINISH
G = GALVANIZE
R = GALVANIZE AND POWDER COAT

50700-BXXX-YX-H-G

DESIGN CRITERIA:

1. DESIGNED FOR 90 MPH WIND ZONE IN ACCORDANCE WITH 2013 AASHTO APPENDIX C WITH 2015 INTERIM REVISIONS "STANDARD SPECIFICATIONS FOR STRUCTURAL SUPPORTS FOR HIGHWAY SIGNS, LUMINAIRES AND TRAFFIC SIGNALS" TO SUPPORT FIXED LOADS WITH AREAS SHOWN AND VDOT 2016 ROAD AND BRIDGE SPECIFICATIONS, SPECIAL PROVISIONS FOR SECTION 700, AND IIM-S&B-90.2.
2. THE MAXIMUM DISTANCE BETWEEN THE BOTTOM OF THE LEVELING NUT AND THE TOP OF THE FOUNDATION SHALL BE ONE INCH (1").
3. ANCHOR BOLT ANALYZED FOR STEEL STRENGTH ONLY. THE ANCHOR BOLT EMBEDMENT LENGTH SHOWN ON THIS DRAWING SHALL BE VERIFIED BY THE FOUNDATION ENGINEER.
4. REFER TO VDOT SPECIFICATIONS REGARDING CONNECTION AND TIGHTENING OF ANCHOR BOLT HARDWARE.
5. CUSTOMER TO CONFIRM ALL DIMENSIONS & ORIENTATIONS BEFORE RELEASING ORDER FOR MANUFACTURING.
6. SEE DRAWING 50700-B2143 FOR MAST ARMS.
7. SEE DRAWING 21-B41 FOR LUMINAIRE ARM

MATERIAL SPECIFICATIONS	
TAPERED TUBE	ASTM A595 GR A
PLATE	ASTM A36
BAR HANDHOLE FRAME	ASTM A529 GR 50 or ASTM A572 GR 50 or ASTM A709 GR 50
HANDHOLE COVER	ASTM A1011 or A36
ANCHOR BOLTS	ASTM F1554 GR 55
ANCHOR BOLT NUTS	ASTM A563 GR DH
FLAT WASHERS	ASTM F436 TYPE 1
POLE TOP	ASTM A1011
PIPE	ASTM A53 GR B or A500 GR B
S.S. HARDWARE	AISI-300 SERIES (18-8)
STRUCTURE FINISH	PER SALES ORDER
HARDWARE FINISH	HD GALV TO ASTM A153

VIRGINIA DEPARTMENT OF TRANSPORTATION
C.O. STRUCTURE AND BRIDGE
REVIEW OF WORKING DRAWINGS
Working drawings have been reviewed in accordance with Section 105.10 of the Specifications with the following comments.
☒ Reviewed ☐ Revise and Resubmit
☐ Reviewed as Noted
Reviewed by: Karl Larson 4/22/2019

COMMONWEALTH OF VIRGINIA
DAVID N. FRITZ
Lic. No. 040948
3/1/19
PROFESSIONAL ENGINEER

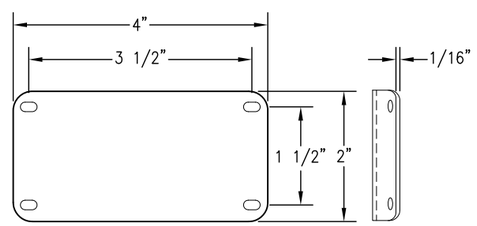

2" x 4" ALUMINUM I.D. TAG WITH (4) SELF TAPPING S.S. #7 x 3/8" SCREWS (4) ø0.136" HOLES DRILLED IN POLE, SECURED TO OUTSIDE OF POLE, ABOVE HANDHOLE & STAMPED WITH THE FOLLOWING INFORMATION:

- UNION METAL IND. CORP.
- DESIGN NUMBER – DATE OF MANUFACTURE
- POLE TYPE – POLE ID NUMBER PER PLANS
- GAUGE, BASE DIAMETER & LENGTH OF POLE
- Fy STEEL OF ANCHOR BOLTS, BASE PLATE & POLE
- ASTM NO., DIAMETER & LENGTH OF ANCHOR BOLTS

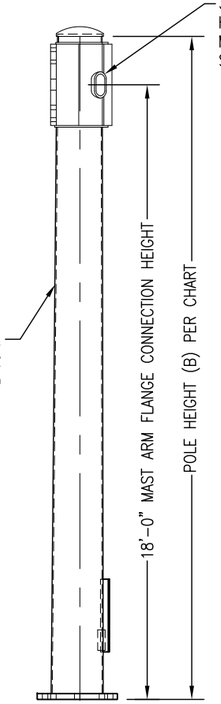

REV	DESCRIPTION	DATE	REV BY	CHK BY
R2	3"x5" HANDHOLE ON POLE TYPES D-6, D, E1, & E2 ONLY	12/14/18	NG	NG
R1	CAULK TOP OF BACKUP RING FOR BUTT ø < 18"	10/17/18	NG	NG

REVISIONS

PROJECT INFORMATION	
CONTRACT ID NUMBER	
PROJECT NAME	

STATE: VA | REQ# / SO# : VA-62118
PROJECT NAME: VDOT STANDARDS

ROUND TAPERED STEEL TRAFFIC CONTROL STRUCTURES (POLES FOR DUAL MAST ARM) - 90 MPH
FOR VIRGINIA DEPARTMENT OF TRANSPORTATION

UNION METAL INDUSTRIES CORPORATION

This document and the contents herein are proprietary and the property of Union Metal Industries. This document is not to be, copied, reproduced, or used for any reason except for the purposes which it was issued without the express written consent of Union Metal Industries. Furthermore Union Metal Industries reserves the right to recall this document and all copies at any time for any reason.

A regular and periodic system of inspections and maintenance must be performed by qualified technicians to ensure ongoing safety for all UMI pole structures.

DESIGNED BY	CHECKED BY	DATE	SCALE	ENG REF
NMG	KMS	8/16/18	NTS	50700-B1931

50700-B2142 | REVISION R2.1 | SHEET 1 OF 2

Hardcopies of this document are considered uncontrolled and are to be used for reference only. Those using this document for reference must take all precautions available to ensure that this document matches the current revision maintained in digital format, within but a single source and protected by edit restrictions.

Hardcopies of this document are considered uncontrolled and are to be used for reference only. Those using this document for reference must take all precautions available to ensure that this document matches the current revision maintained in digital format, within but a single source and protected by edit restrictions.

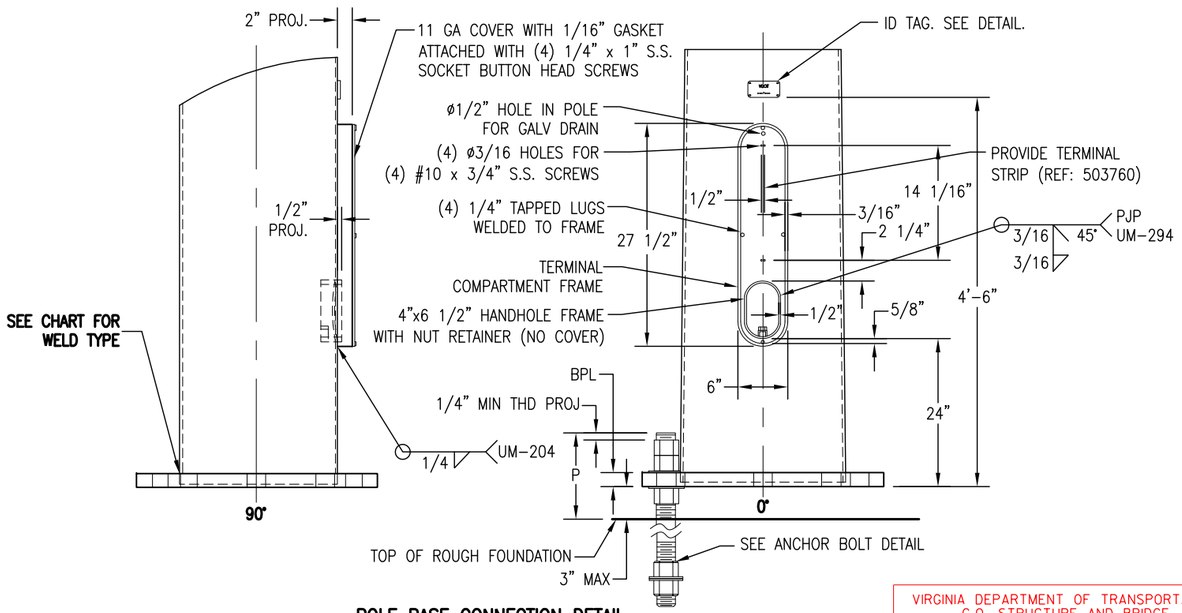

POLE BASE CONNECTION DETAIL
(TERM. COMP. OPTION SHOWN)

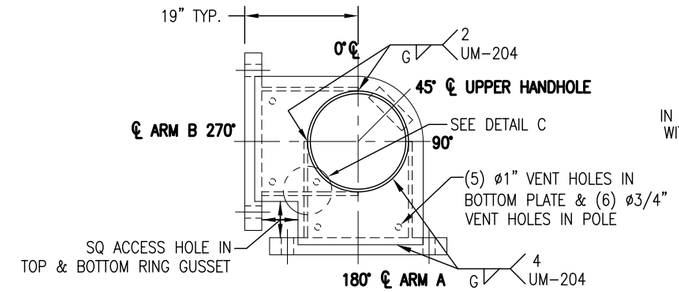

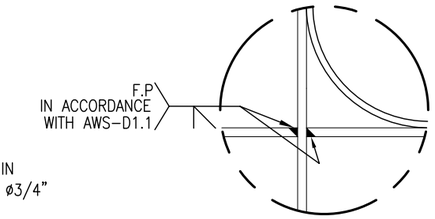

DETAIL C
TOP GUSSET NOT SHOWN FOR CLARITY

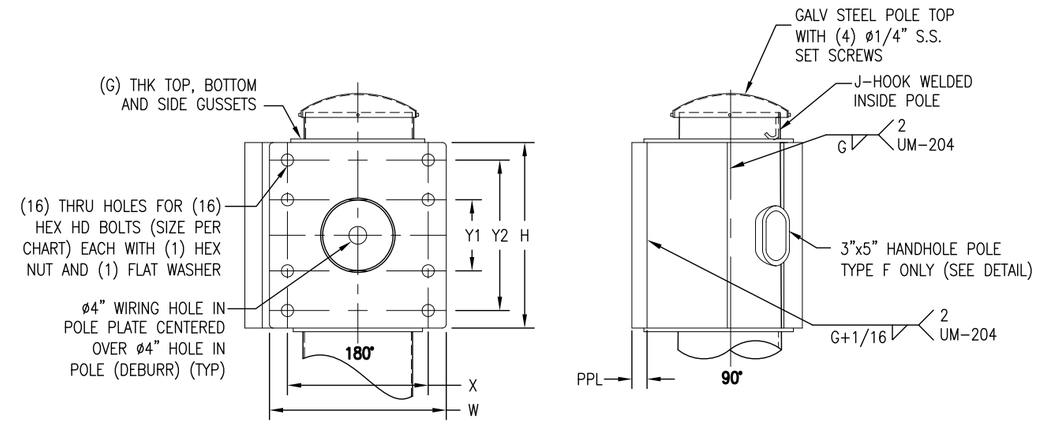

MAST ARM FLANGE CONNECTION DETAIL

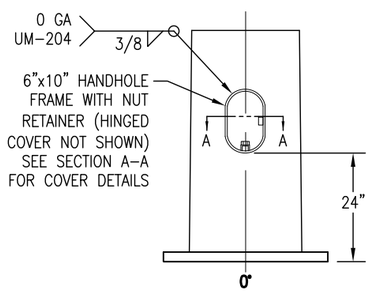

6"x10" HHF W/ HINGED COVER OPTION

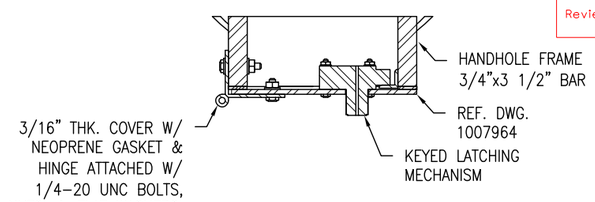

SECTION A-A

VIRGINIA DEPARTMENT OF TRANSPORTATION
C.O. STRUCTURE AND BRIDGE
REVIEW OF WORKING DRAWINGS

Working drawings have been reviewed in accordance with Section 105.10 of the Specifications with the following comments.

☒ Reviewed ☐ Revise and Resubmit

☐ Reviewed as Noted

Reviewed by: Karl Larson 4/22/2019

COMMONWEALTH OF VIRGINIA
DAVID N. FRITZ
Lic. No. 040948
3/1/19
PROFESSIONAL ENGINEER

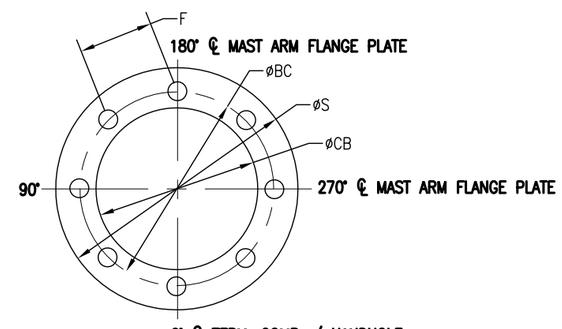

BASE PLATE DETAIL

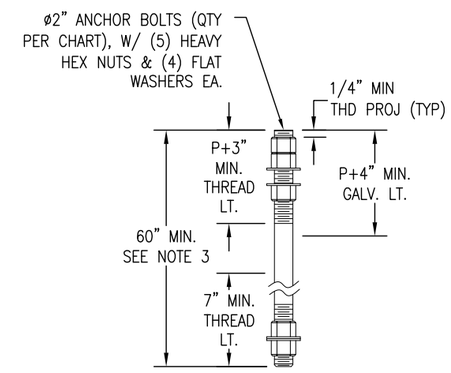

ANCHOR BOLT DETAIL

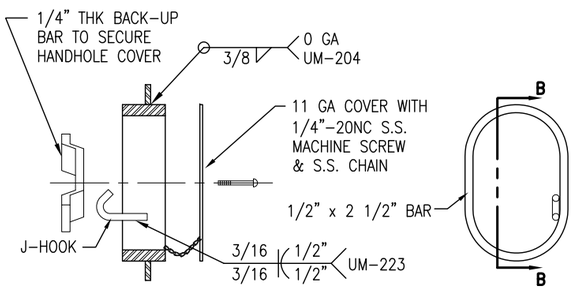

SECTION B-B

FRONT VIEW

3"x5" HANDHOLE FRAME DETAIL

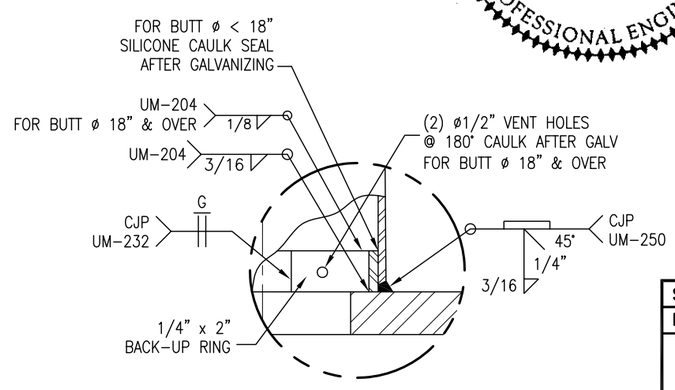

POLE BASE WELD DETAIL
(SEE CHART FOR WELD TYPE)

STATE: VA	REQ# / SO# : VA-62118	REV	DESCRIPTION	DATE	REV BY	CHK BY
PROJECT NAME: VDOT STANDARDS			REVISIONS			

ROUND TAPERED STEEL TRAFFIC CONTROL STRUCTURES (POLES FOR SINGLE MAST ARM) - 90 MPH
FOR VIRGINIA DEPARTMENT OF TRANSPORTATION

UNION METAL INDUSTRIES CORPORATION

This document and the contents herein are proprietary and the property of Union Metal Industries. This document is not to be, copied, reproduced, or used for any reason except for the purposes which it was issued without the express written consent of Union Metal Industries. Furthermore Union Metal Industries reserves the right to recall this document and all copies at any time for any reason.

A regular and periodic system of inspections and maintenance must be performed by qualified technicians to ensure ongoing safety for all UMI pole structures.

DESIGNED BY	CHECKED BY	DATE	SCALE	ENG REF
NMG	KMS	8/16/18	NTS	50700-B1931

50700-B2142

REVISION R2.1

SHEET 2 OF 2

QTY	UMIC DESIGN NUMBER	ARM SPAN (ft)	RAKE ANGLE A	WELD TYPE	X (in)	Y1 (in)	Y2 (in)	W (in)	H (in)	ARM PLATE THICKNESS T (in)	øCA (in)	BOLT ø (in)	FIXED ARM SHAFT DATA				JOINT LENGTH (ft)	EXTENSION ARM SHAFT DATA			
													WALL THICKNESS (in)	LARGE DIAMETER (in)	SMALL DIAMETER (in)	SHAFT LENGTH (ft)		WALL THICKNESS (in)	LARGE DIAMETER (in)	SMALL DIAMETER (in)	SHAFT LENGTH (ft)
	50700-B2143-Y1	30	2°	SOCKET	20.00	10.00	18.00	24.50	22.50	2.00	–	1.50	.18 (7 GA)	10.50	6.30	30.00	–	–	–	–	–
	50700-B2143-Y2	40	2°	SOCKET	20.00	10.00	18.00	24.50	22.50	2.00	–	1.50	.25 (3 GA)	11.00	5.40	40.00	–	–	–	–	–
	50700-B2143-Y3	49	2°	SOCKET	20.00	10.00	18.00	24.50	22.50	2.00	–	1.50	.25 (3 GA)	13.00	10.10	20.75	2.00	.18 (7 GA)	10.77	6.54	30.25
	50700-B2143-Y4	30-D	2°	SOCKET	25.50	12.00	20.00	30.00	24.50	2.00	–	1.50	.18 (7 GA)	10.50	6.30	30.00	–	–	–	–	–
	50700-B2143-Y5	40-D	2°	SOCKET	25.50	12.00	20.00	30.00	24.50	2.00	–	1.50	.25 (3 GA)	11.00	5.40	40.00	–	–	–	–	–
	50700-B2143-Y6	49-D	2°	SOCKET	25.50	12.00	20.00	30.00	24.50	2.00	–	1.50	.25 (3 GA)	13.00	10.10	20.75	2.00	.18 (7 GA)	10.77	6.54	30.25
	50700-B2143-Y7	60	2°	FP	25.50	12.00	20.00	30.00	24.50	2.75	8.00	1.50	.25 (3 GA)	15.50	11.30	30.00	2.00	.18 (7 GA)	11.98	7.50	32.00
	50700-B2143-Y8	65	2°	FP	25.50	12.00	20.00	30.00	24.50	2.75	8.00	1.50	.25 (3 GA)	16.75	12.55	30.00	2.00	.18 (7 GA)	13.23	8.05	37.00
	50700-B2143-Y9	70	3°	FP	25.50	12.00	20.00	30.00	24.50	2.75	8.00	1.50	.31 (0 GA)	16.00	11.31	33.50	2.00	.18 (7 GA)	11.99	6.60	38.50
	50700-B2143-Y10	75-1	3°	FP	25.50	12.00	20.00	30.00	24.50	2.75	8.00	1.50	.31 (0 GA)	16.84	11.56	37.75	2.00	.18 (7 GA)	12.23	6.74	39.25
	50700-B2143-Y11	75-2	3°	FP	25.50	12.00	20.00	30.00	24.50	2.75	8.00	1.50	.31 (0 GA)	17.95	12.74	37.25	2.25	.18 (7 GA)	13.45	7.85	40.00

FP = FULL PEN. WELD. SEE DETAIL.

7 GA = 0.179" WALL THICKNESS
3 GA = 0.250" WALL THICKNESS
0 GA = 0.313" WALL THICKNESS
E = ROUND TAPERED STEEL TUBE @ 0.14 in/ft TAPER
-D = FOR DUAL ARM USE WITH ARMS OVER 49'
-1 = CASE 1 LOADING
-2 = CASE 2 LOADING

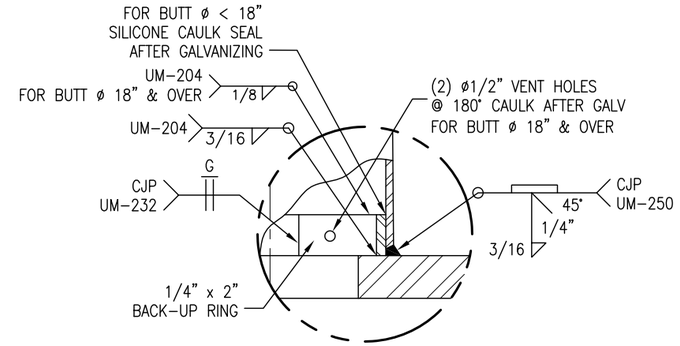

ARM FLANGE WELD DETAIL
(SEE CHART FOR WELD TYPE)

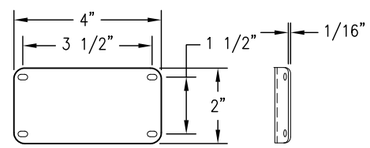

IDENTIFICATION TAG DETAIL

2" x 4" ALUMINUM I.D. TAG WITH (4) SELF TAPPING S.S. #7 x 3/8" SCREWS (4) ø0.136" HOLES DRILLED IN POLE, SECURED TO OUTSIDE OF MAST ARM ON BOTTOM & STAMPED WITH THE FOLLOWING INFORMATION:

- UNION METAL IND. CORP.
- DESIGN NUMBER – DATE OF MANUFACTURE
- GAUGE, BASE DIAMETER & LENGTH OF MAST ARM
- Fy STEEL OF ARM PLATE & MAST ARM

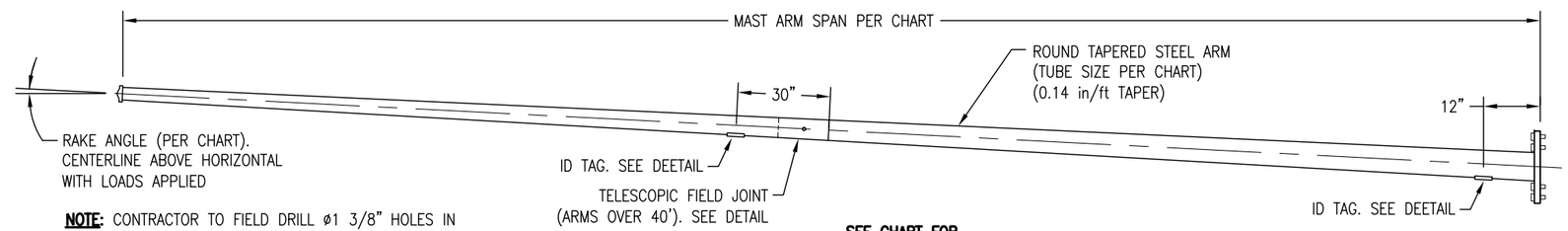

NOTE: CONTRACTOR TO FIELD DRILL ø1 3/8" HOLES IN ARM AT EACH SIGNAL LOCATION, UMC TO FURNISH ø1" I.D. RUBBER GROMMETS

DESIGN CRITERIA:

1. DESIGNED FOR 90 MPH WIND ZONE IN ACCORDANCE WITH 2013 AASHTO APPENDIX C WITH 2015 INTERIM REVISIONS "STANDARD SPECIFICATIONS FOR STRUCTURAL SUPPORTS FOR HIGHWAY SIGNS, LUMINAIRES AND TRAFFIC SIGNALS" TO SUPPORT FIXED LOADS WITH AREAS SHOWN AND VDOT 2016 ROAD AND BRIDGE SPECIFICATIONS, SPECIAL PROVISIONS FOR SECTION 700, AND IIM-S&B-90.2.
2. PER AASHTO THE MINIMUM LENGTH OF ANY TELESCOPIC FIELD JOINT SHALL BE 1.5 TIMES THE INSIDE DIAMETER OF THE END OF THE FEMALE SECTION.
3. VIBRATION IS MORE LIKELY TO OCCUR WHEN STRUCTURES ARE INSTALLED WITHOUT ATTACHING THE SIGNALS AND OR SIGNS. THEREFORE, THE INTENDED EQUIPMENT OR DAMPENING DEVICES MUST BE INSTALLED AT THE TIME OF ERECTION. BECAUSE VIBRATION IS GENERALLY UNPREDICTABLE, A MAINTENANCE PROGRAM SHOULD INCLUDE INSPECTION FOR INDICATIONS OF EXCESSIVE VIBRATION OR FATIGUE AND EXAMINATION FOR ANY STRUCTURAL DAMAGE OR BOLT LOOSENING.
4. CUSTOMER TO CONFIRM ALL DIMENSIONS & ORIENTATIONS BEFORE RELEASING ORDER FOR MANUFACTURING.
5. SIGNALS AND SIGNS FOR REFERENCE ONLY, NOT INCLUDED.
6. SEE DRAWING 50700-B2141 FOR POLE STRUCTURES FOR SINGLE MAST ARMS AND DRAWING 50700-B2142 FOR POLE STRUCTURES FOR DUAL MAST ARMS.

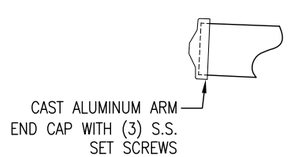

MAST ARM TIP END DETAIL

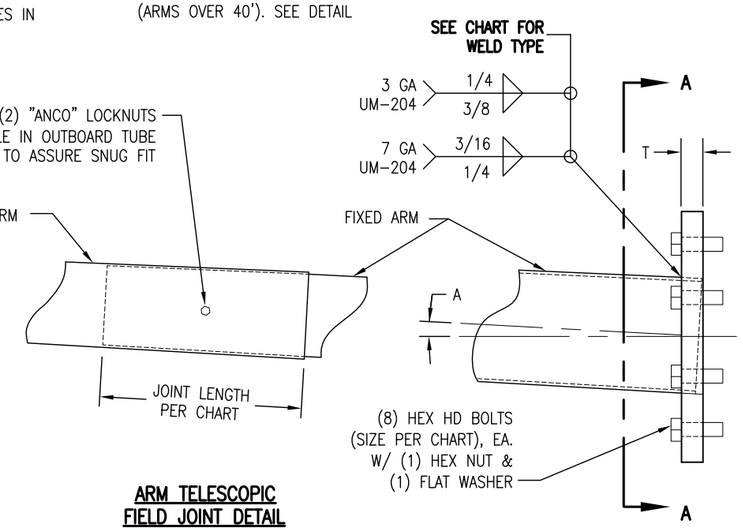

ARM TELESCOPIC FIELD JOINT DETAIL

MAST ARM FLANGE CONNECTION DETAIL

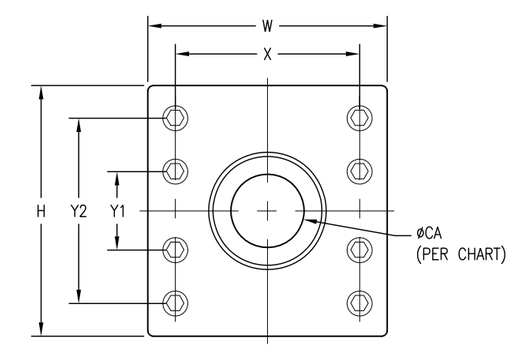

SECTION A–A ARM FLANGE PLATE DETAIL

COMMONWEALTH OF VIRGINIA
DAVID N. FRITZ
Lic. No. 040948
3/1/19
PROFESSIONAL ENGINEER

VIRGINIA DEPARTMENT OF TRANSPORTATION
C.O. STRUCTURE AND BRIDGE
REVIEW OF WORKING DRAWINGS
Working drawings have been reviewed in accordance with Section 105.10 of the Specifications with the following comments.
☒ Reviewed ☐ Revise and Resubmit
☐ Reviewed as Noted
Reviewed by: Karl Larson 4/22/2019

REV	DESCRIPTION	DATE	REV BY	CHK BY
R2	REVISED Y2 ON Y1-Y3	2/22/19	NG	NG
R1	CAULK TOP OF BACKUP RING FOR BUTT ø < 18"	10/17/18	NG	NG

REVISIONS

MATERIAL SPECIFICATIONS	
TAPERED TUBE	ASTM A595 GR A
STEEL FLANGES	ASTM A36
FLANGE CONNECTION FASTENERS	ASTM A325 TYPE 1
FLANGE CONNECTION NUTS	ASTM A563 GR DH
FLANGE CONNECTION WASHERS	ASTM F436
ALUMINUM END CAP	ASTM B26
STAINLESS STEEL HARDWARE	AISI-300 SERIES (18-8)
HARDWARE FINISH	HD GALV TO ASTM A153
STRUCTURE FINISH	PER SALES ORDER

PROJECT INFORMATION	
CONTRACT ID NUMBER	
PROJECT NAME	

STATE: VA | REQ# / SO# : VA-62118
PROJECT NAME: VDOT STANDARDS

ROUND TAPERED STEEL TRAFFIC CONTROL STRUCTURES (MAST ARMS) - 90 MPH
FOR VIRGINIA DEPARTMENT OF TRANSPORTATION

UNION METAL INDUSTRIES CORPORATION

This document and the contents herein are proprietary and the property of Union Metal Industries. This document is not to be, copied, reproduced, or used for any reason except for the purposes which it was issued without the express written consent of Union Metal Industries. Furthermore Union Metal Industries reserves the right to recall this document and all copies at any time for any reason.

A regular and periodic system of inspections and maintenance must be performed by qualified technicians to ensure ongoing safety for all UMI pole structures.

DESIGNED BY	CHECKED BY	DATE	SCALE	ENG REF
NMG	KMS	8/16/18	NTS	50700-B1932

50700-B2143 | REVISION R2.1 | SHEET 1 OF 2

Hardcopies of this document are considered uncontrolled and are to be used for reference only. Those using this document for reference must take all precautions available to ensure that this document matches the current revision maintained in digital format, within but a single source and protected by edit restrictions.

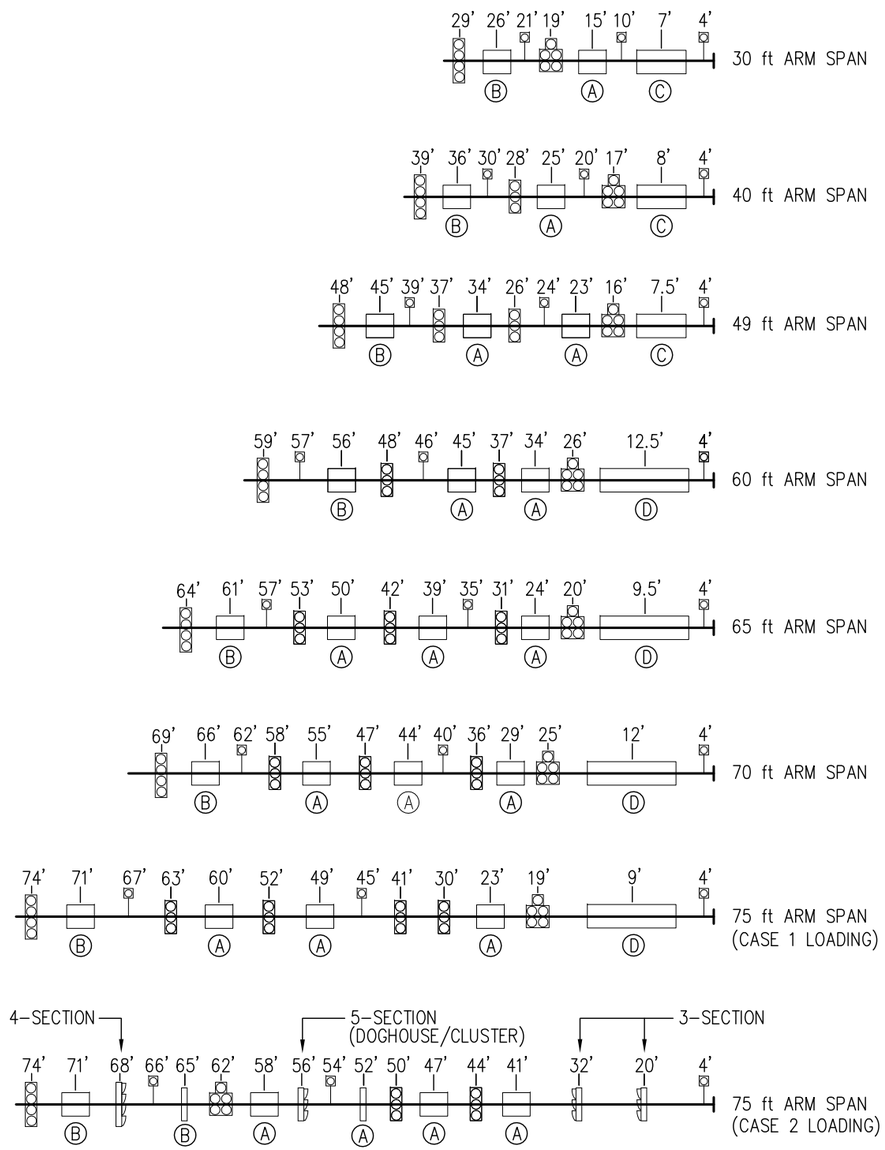

LOADING DIAGRAMS

ITEM	DESCRIPTION	E.P.A. (sq ft)	WEIGHT (lbs)
A	30"x36" SIGN	7.5	22.5
B	36"x42" SIGN	10.5	26.7
C	12'x2.5' STREET NAME SIGN	30	66
D	15'x2.5' STREET NAME SIGN	37.5	88.5
	3 SECTION SIGNAL WITH BACKPLATE	8.7	65
	4 SECTION SIGNAL WITH BACKPLATE	11.0	80
	5 SECTION SIGNAL WITH BACKPLATE (IN-LINE)	13.4	95
	5 SECTION SIGNAL WITH BACKPLATE (DOGHOUSE/CLUSTER)	13.75	105
	VIDEO CAMERA	1	22

COMMONWEALTH OF VIRGINIA
DAVID N. FRITZ
Lic. No. 040948
3/1/19
PROFESSIONAL ENGINEER

VIRGINIA DEPARTMENT OF TRANSPORTATION
C.O. STRUCTURE AND BRIDGE
REVIEW OF WORKING DRAWINGS

Working drawings have been reviewed in accordance with Section 105.10 of the Specifications with the following comments.

☒ Reviewed ☐ Revise and Resubmit

☐ Reviewed as Noted

Reviewed by: Karl Larson 4/22/2019

STATE: VA	REQ# / SO# : VA-62118	REV	DESCRIPTION	DATE	REV BY	CHK BY
PROJECT NAME: VDOT STANDARDS			REVISIONS			

ROUND TAPERED STEEL TRAFFIC CONTROL STRUCTURES (MAST ARMS) - 90 MPH
FOR VIRGINIA DEPARTMENT OF TRANSPORTATION

UNION METAL INDUSTRIES CORPORATION

This document and the contents herein are proprietary and the property of Union Metal Industries. This document is not to be, copied, reproduced, or used for any reason except for the purposes which it was issued without the express written consent of Union Metal Industries. Furthermore Union Metal Industries reserves the right to recall this document and all copies at any time for any reason.

A regular and periodic system of inspections and maintenance must be performed by qualified technicians to ensure ongong safety for all UMI pole structures.

DESIGNED BY	CHECKED BY	DATE	SCALE	ENG REF
NMG	KMS	8/16/18	NTS	50700-B1932
50700-B2143			REVISION R2.1	SHEET 2 OF 2

Hardcopies of this document are considered uncontrolled and are to be used for reference only. Those using this document for reference must take all precautions available to ensure that this document matches the current revision maintained in digital format, within but a single source and protected by edit restrictions.

1007964

ITEM NO.	PART NO.	QTY.	DESCRIPTION	MATERIAL	DWG NO.	WEIGHT
1	C58899	1	HINGE, 2 1/4" X 1 3/4" X 1/8"	ST. STEEL	2G-1807-A24	0.71
2	C60448	1	COVER 7.50W 11.5L 0.18T GALV.	A36 PL 0.18	B58-B622	3.81
3	C60447	1	GASKET, HHF 6x10	60 DUROMETER NEOPRENE .13	B1620-A52	0.10
4	505117	1	ENCLOSURE LOCK #A15485-LS US4 7/8 CCL SECURITY PRODUCTS KEY# 1R6382	-	-	-
5	505028	4	BOLT-HEX HD SS NFR #10-24NC 2.00LG 2.00THDLG	SS	-	0.02
6	503092	4	NUT, HEX SS AISI 300 (18-8) NFR #10	SS AISI 300 (18-8)	-	0.00
7	S80105	4	WASHER, FLAT SS NFR #10	SS	-	0.00
8	501091	2	BOLT-HEX HD SS NFR 0.25-20NC 0.75LG 0.75THDLG	SS	-	0.02
9	500176	6	WASHER, FLAT SS NFR 0.25 0.625 OD	SS	-	0.00
10	500175	4	NUT, HVY HEX SS AISI 300 (18-8) NFR 0.25	SS AISI 300 (18-8)	-	0.01
11	504077	2	BOLT-HEX HD SS NFR 0.25-20NC 1.50LG 0.75THDLG	SS	-	0.03

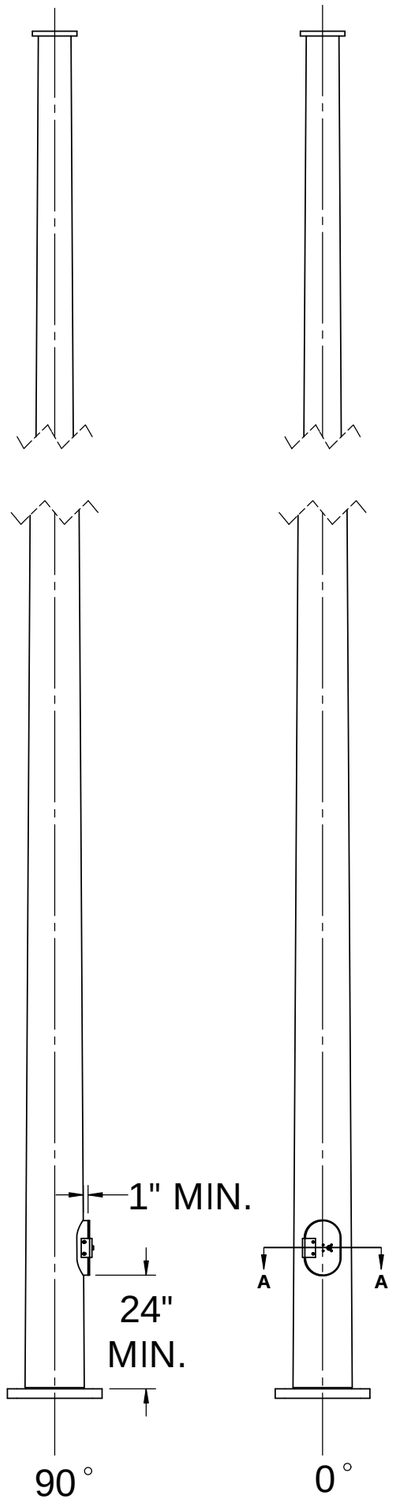

COMMONWEALTH OF VIRGINIA
DAVID N. FRITZ
Lic. No. 040948
3/1/19
PROFESSIONAL ENGINEER

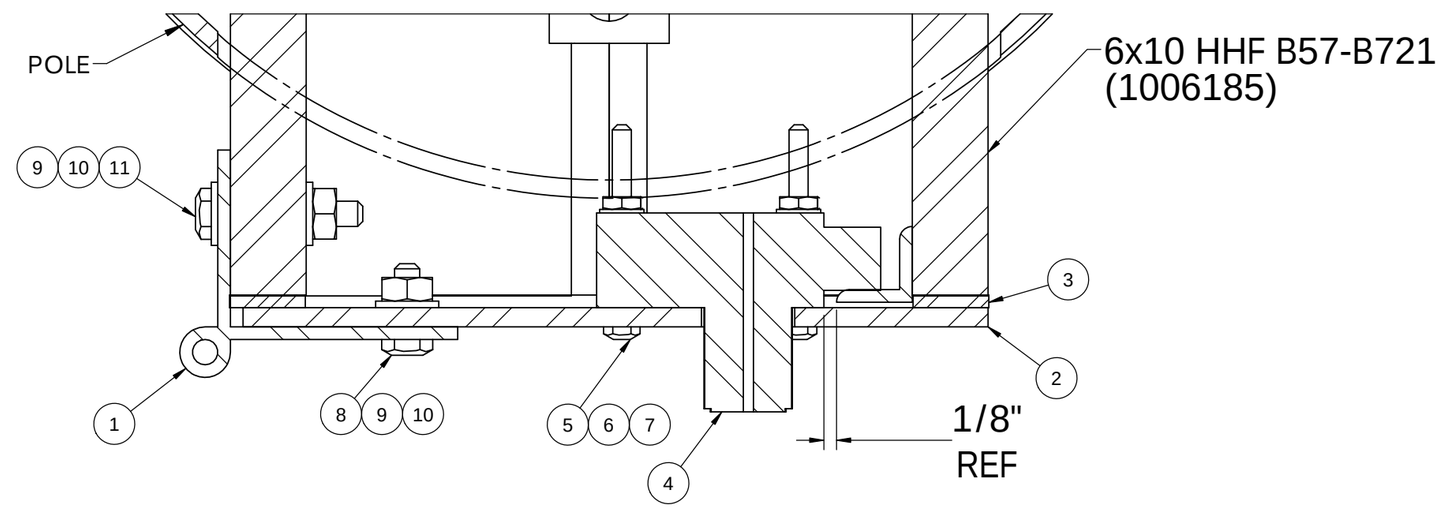

SECTION A-A

NOTES:

1. HANDHOLES WITHIN 10'-0" OF THE GROUND SHALL BE HINGED AND LATCHABLE, WITH APPROVED LATCHING MECHANISM
2. (4) SHALL BE AN ALL BRASS CCL LOCK #A15481RS-LS, KEYED ALIKE FOR KEY #2, PROVIDED WITH DUST CAP. PROVIDE TWO KEYS WITH EACH POLE **(P/N: 505117)**

VIRGINIA DEPARTMENT OF TRANSPORTATION
C.O. STRUCTURE AND BRIDGE
REVIEW OF WORKING DRAWINGS

Working drawings have been reviewed in accordance with Section 105.10 of the Specifications with the following comments.

☒ Reviewed ☐ Revise and Resubmit

☐ Reviewed as Noted

Reviewed by: Karl Larson 4/22/2019

STATE: VA | REQ# / SO# : VA-120616-1

PROJECT NAME: 6x10 LOCKING HANDHOLE

REV	DESCRIPTION	DATE	REV BY	CHK BY
	REVISIONS			

SIGNAL POLE / SIGN STRUCTURE 2016 STANDARDS
LOCKING HANDHOLE DETAILS

Union Metal Corporation

This document and the contents herein are proprietary and the property of Union Metal Corporation. This document is not to be, copied, reproduced, or used for any reason except for the purposes which it was issued without the express written consent of Union Metal Corporation. Furthermore Union Metal Corporation reserves the right to recall this document and all copies at any time for any reason.

MODELED BY	DESIGNED BY	CHECKED BY	DATE	SCALE	ENG REF
JLZ	JLZ	RLD	12/19/16	NTS	70861-B216
1007964				REVISION R0	SHEET SHEET 1 OF 1

Hardcopies of this document are considered uncontrolled and are to be used for reference only. Those using this document for reference must take all precautions available to ensure that this document matches the current revision maintained in digital format, within but a single source and protected by edit restrictions.