INTERSTATE 64 / HIGH RISE BRIDGE CORRIDOR STUDY

CITY OF CHESAPEAKE, VA | STATE PROJECT #: 0064-131-783 | UPC: 104366

ENVIRONMENTAL ASSESSMENT

October 2014

U.S. DEPARTMENT OF TRANSPORTATION
FEDERAL HIGHWAY ADMINISTRATION
and
VIRGINIA DEPARTMENT OF TRANSPORTATION

COOPERATING AGENCIES:
U.S. COAST GUARD

ENVIRONMENTAL ASSESSMENT

Interstate 64 / High Rise Bridge Corridor Study

City of Chesapeake
Project Number: 0064-131-783, P101; UPC: 104366
Federal Project Number: NH-IM-064-3(481)

Submitted Pursuant to 42 U.S.C. 4332(2)(C)

Approved for Public Availability:

10/3/2014
Date

for Division Administrator
Federal Highway Administration

INTERSTATE 64 / HIGH RISE BRIDGE CORRIDOR STUDY

Draft Environmental Assessment
Document Errata

Errata Record Date: October 21, 2014

Summary: Changes identified in this document errata reflect revisions made to the noise analysis. These changes were made during final review of the Noise Technical Report. These changes are consistent with the Noise Technical Report for the study.

1. Page 40, Section 3.3.2, Table 3-4

Original Text:

Table 3-1: Existing & Projected Noise Impacts

Alternative	Land Use and NAC Activity Category				
	Residential Exterior (B)	Recreational Exterior (C)	Institutional Interior (D)	Commercial Exterior (E)	Total
Existing	326	46	0	0	372
No Build Alternative	390	55	0	0	445
CBA 1, 95 ft.	787	76	2	3	868
CBA 1, 135 ft.	817	78	2	3	900
CBA 2, 95 ft.	787	76	2	3	868
CBA 2, 135 ft.	817	78	2	3	900

Amended Text:

Table 3-2: Existing & Projected Noise Impacts

Alternative	Land Use and NAC Activity Category				
	Residential Exterior (B)	Recreational Exterior (C)	Institutional Interior (D)	Commercial Exterior (E)	Total
Existing	326	46	0	0	372
No Build Alternative	390	55	0	0	445
CBA 1, 95 ft.	787	76	2	2	867
CBA 1, 135 ft.	817	78	2	2	899
CBA 2, 95 ft.	787	76	2	2	867
CBA 2, 135 ft.	817	78	2	2	899

Draft Environmental Assessment
Document Errata

2. Page 40, Section 3.3.2, second paragraph, third sentence

   Original Text:

   "A total of 868 impacted receptors are predicted for CBA 1 and 2 with the 95-ft high bridge, comprised of 787 residential dwelling units (Category B), 76 recreational receptors (Category C), 3 institutional receptors (interior, Category D) and 2 commercial receptors (exterior, Category E)."

   Amended Text:

   "A total of 867 impacted receptors are predicted for CBA 1 and 2 with the 95-ft high bridge, comprised of 787 residential dwelling units (Category B), 76 recreational receptors (Category C), 2 institutional receptors (interior, Category D) and 2 commercial receptors (exterior, Category E)."

3. Page 40, Section 3.3.2, second paragraph, forth sentence

   Original Text:

   "For CBA 1 and 2 with the 135 ft high bridge, a total of 900 receptors are predicted to be impacted, including 815 residential (Category B), 82 recreational receptors (Category C), 3 institutional receptors (interior, Category D), and 2 commercial receptors (Category E)."

   Amended Text:

   "For CBA 1 and 2 with the 135 ft high bridge, a total of 899 receptors are predicted to be impacted, including 815 residential (Category B), 82 recreational receptors (Category C), 2 institutional receptors (interior, Category D), and 2 commercial receptors (Category E)."

4. Page 42, Section 3.3.3, fifth paragraph, third sentence

   Original Text:

   "The feasible and reasonable barriers would benefit a total of 500 to 700 impacted receptors, 1100 to 1400 receptors in total, with an estimated total cost of $32 million to $35 million."

   Amended Text:

   "The feasible and reasonable barriers would benefit a total of 700 to 800 impacted receptors, 1300 to 1400 receptors in total, with an estimated total cost of $32 million to $35 million."

TABLE OF CONTENTS

Chapter 1.0 PURPOSE AND NEED 1
1.1 DESCRIPTION OF THE STUDY AREA 1
1.2 INTERSTATE 64 CORRIDOR BACKGROUND AND STUDY HISTORY 1
1.2.1 I-64 Corridor in Virginia 1
1.2.2 Previous Studies and Related Projects 2
1.3 NEEDS FOR THE PROJECT 3
1.3.1 Improve Capacity 3
1.3.2 Enhance Corridor Safety 7
1.3.3 Improve Emergency Evacuation 8
1.3.4 High Rise Bridge Improvements 10
1.4 PURPOSE AND NEED SUMMARY 10
Chapter 2.0 ALTERNATIVES 13
2.1 ALTERNATIVE DEVELOPMENT PROCESS 13
2.1.1 Purpose and Need 13
2.1.2 Establishment of Design Criteria 13
2.2 ALTERNATIVES SCREENING APPROACH AND CRITERIA 13
2.3 ALTERNATIVES NOT RETAINED FOR DETAILED STUDY 14
2.3.1 Mainline Alternatives 14
2.3.2 Bridge Alternatives 15
2.3.3 Bridge Type 16
2.4 ALTERNATIVES RETAINED FOR DETAILED STUDY 17
2.4.1 Mainline Alternatives 17
2.4.1.1 Ability to Meet Needs 18
2.4.2 Bridge Alternatives 21
Chapter 3.0 ENVIRONMENTAL CONSEQUENCES 35
3.1 INTRODUCTION AND OVERVIEW OF ENVIRONMENTAL ISSUES 35
3.2 SOCIOECONOMIC RESOURCES 38
3.2.1 Existing Conditions 38
3.2.2 Environmental Consequences 38
3.3 NOISE 39
3.3.1 Existing Conditions 39

3.3.2 Environmental Consequences 40
3.3.3 Noise Abatement 41
3.3.4 Construction Noise Consideration 42
3.4 AQUATIC RESOURCES 43
3.4.1 Existing Conditions 43
3.4.2 Environmental Consequences 44
3.5 WILDLIFE AND HABITAT 47
3.5.1 Existing Conditions 47
3.5.2 Environmental Consequences 48
3.6 INDIRECT AND CUMULATIVE EFFECTS 49
3.6.1 Indirect Effects 49
3.6.1.1 Indirect Effect Conclusion 49
3.6.2 Cumulative Effects 50
3.6.2.1 Cumulative Effects Conclusion 50
3.7 SECTION 4(f) PROPERTIES 50
Chapter 4.0 COORDINATION AND COMMENTS 57
4.1 AGENCY COORDINATION 57
4.1.1 Agency Scoping Responses 58
4.2 PUBLIC INVOLVEMENT 59
4.2.1 Citizen Information Meeting 59
4.2.2 Location Public Hearing 59
4.3 ADDITIONAL COORDINATION EFFORTS 59
4.3.1 Federal Partnering 60
4.3.2 United States Coast Guard 60
4.3.3 Chesapeake Public Schools 61
4.3.4 Other Public Outreach 62
Chapter 5.0 REFERENCES 63

LIST OF TABLES

Table 1-1: Roadway Segment LOS Descriptions 4
Table 1-2: Existing and Future LOS along I-64 Segments in the Study Area 4
Table 1-3: Existing Crash and Safety Data within the Study Area (Average Annual Crash Rates) 8
Table 1-4: Hurricanes Affecting Hampton Roads within the Last Two Decades 9
Table 2-1: Screening Criteria 14

Table 3-1: Summary of Environmental Conditions 35
Table 3-2: Summary of Potential Environmental Impacts by Build Alternative 37
Table 3-3: Potential Property Impacts and Displacements 39
Table 3-4: Existing & Projected Noise Impacts 40
Table 3-5: Category C Recreational Noise Impacts 41
Table 3-6: Streams Identified within the Study Area 43
Table 3-7: Estimated Stream Impacts by Alternative 45
Table 3-8: Estimated Wetland Impacts by Alternative 45
Table 3-9: Estimated Total Floodplain Impacts by Alternative 47
Table 3-10: Estimated Forested Areas Impacts by Alternative 48

LIST OF FIGURES

Figure 1-1: Study Area 11
Figure 1-2: Intermodal Connection 12
Figure 2-1: Eight Lane Build Alternative Mapping 23
Figure 2-2: Eight Lane Build Alternative Mapping 24
Figure 2-3: Eight Lane Build Alternative Mapping 25
Figure 2-4: Eight Lane Build Alternative Mapping 26
Figure 2-5: Eight Lane Build Alternative Mapping 27
Figure 2-6: Eight Lane Build Alternative Mapping 28
Figure 2-7: Eight Lane Build Alternative Typical Sections 29
Figure 2-8: Eight Lane Build Alternative Typical Sections 30
Figure 2-9: Eight Lane Build Alternative Typical Sections 31
Figure 2-10: Eight Lane Build Managed Alternative Typical Sections 32
Figure 2-11: Eight Lane Build Managed Alternative Typical Sections 33
Figure 2-12: Eight Lane Build Managed Alternative Typical Sections 34
Figure 3-1: Water Bodies 53
Figure 3-2: Wetlands 54
Figure 3-3: Floodplains 55
Figure 3-4: Forested Areas 56

APPENDICIES

Appendix A: Correspondence

ACRONYM LIST

American Association of State Highway and Transportation Officials	AASHTO
Average Daily Traffic	ADT
Candidate Build Alternative	CBA
City of Chesapeake, Virginia	Chesapeake
Collector-Distributor	C-D
Common Noise Environment	CNE
Commonwealth of Virginia	Virginia
Corridor of Statewide Significance	CoSS
Council on Environmental Quality	CEQ
Decibel	dBA
Environmental Assessment	EA
Erosion & Sediment Control	ESC
Estuarine Intertidal Emergent	E2EM
Farmland Policy Protection Act	FPPA
Federal Emergency Management Agency	FEMA
Federal Highway Administration	FHWA
Flood Insurance Rate Map	FIRM
G.A. Treakle Memorial Bridge	High Rise Bridge
General Purpose	GP
Geographic Information Systems	GIS
Great Bridge Boulevard	VA Route 190
Hampton Roads Transit	HRT
Hampton Roads Transportation Planning Organization	HRTPO
High Occupancy Toll	HOT
High Occupancy Vehicle	HOV
Interstate 264	I-264
Interstate 464	I-464
Interstate 64	I-64
Interstate 664	I-664
Level of Service	LOS
National Environmental Policy Act	NEPA

National Highway System	NHS
National Oceanic and Atmospheric Administration	NOAA
National Wild and Scenic Rivers System	NWSRS
Noise Abatement Criteria	NAC
Palustrine Emergent	PEM
Palustrine Forested	PFO
Polychlorinated biphenyls	PCBs
Preliminary Public Notice	PPN
Route 13 / Military Highway	Route 13
Route 17 / George Washington Highway	Route 17
Single Occupancy Vehicle	SOV
Stormwater Management	SWM
Strategic Highway Network	STRAHNET
Total Maximum Daily Load	TMDL
Transportation Demand Management	TDM
Transportation System Management	TSM
United States Coast Guard	USCG
United States Department of Transportation	USDOT
United States Environmental Protection Agency	USEPA
United States Fish and Wildlife Service	USFWS
Unified Stream Methodology	USM
Virginia Department of Agriculture and Consumer Services	VDACS
Virginia Department of Conservation and Recreation	DCR
Virginia Department of Environmental Quality	DEQ
Virginia Department of Forestry	DOF
Virginia Department of Game and Inland Fisheries	DGIF
Virginia Department of Health	VDH
Virginia Department of Transportation	VDOT
Virginia Marine Resources Commission	VMRC
Vehicle Miles Travelled	VMT
Waters of the United States, including wetlands	WOUS

Chapter 1.0 PURPOSE AND NEED

The Virginia Department of Transportation (VDOT), in cooperation with the Federal Highway Administration (FHWA) as the lead federal agency, and the United States Coast Guard (USCG) as a cooperating agency, is evaluating options to improve transportation conditions along the Interstate 64 (I-64) corridor between the Interstate 464 (I-464) interchange and the Interstate 664 (I-664) and Interstate 264 (I-264) interchanges at Bowers Hill (I-664/I-264) in the City of Chesapeake, Virginia (Chesapeake). Pursuant to the National Environmental Policy Act of 1969, as amended, (NEPA) and in accordance with FHWA regulations[1], this Environmental Assessment (EA) has been prepared to analyze the potential social, economic, and environmental effects associated with the proposed project.

1.1 DESCRIPTION OF THE STUDY AREA

The study area for the Interstate 64/High Rise Bridge Corridor Study is located in the southwestern quadrant of the Hampton Roads Beltway, which is formed by a loop of I-64 and I-664 (**Figure 1-1)**. The study area encompasses approximately eight-miles of I-64, consisting of two travel lanes in each direction, between the I-464 interchange and I-664/I-264 interchanges at Bowers Hill. It includes interchanges along I-64 at Military Highway (Route 13), George Washington Highway (Route 17), and Great Bridge Boulevard (Route 190). The G. A. Treakle Memorial Bridge (High Rise Bridge), a mile-long double-leaf bascule bridge that spans the Southern Branch of the Elizabeth River, also is included in the study area.

Within the study area, I-64 connects to numerous businesses, homes, schools, and recreational opportunities throughout Chesapeake. Due to the loop that I-64 follows through the Hampton Roads region of Virginia, I-64 West travels in an easterly direction and I-64 East travels westerly through the study area. For the purpose of this EA, I-64 will be described in terms of the road name and not the direction of the road.

1.2 INTERSTATE 64 CORRIDOR BACKGROUND AND STUDY HISTORY

1.2.1 I-64 Corridor in Virginia

I-64 traverses approximately 300 miles between Hampton Roads and the state line between Virginia and West Virginia, just west of the City of Covington in Allegheny County. I-64 is part of the National Highway System (NHS)[2], the Strategic Highway Network (STRAHNET)[3], and was designated as a Corridor of Statewide Significance[4] (CoSS) in *Virginia's Multimodal Long-Range Transportation Policy Plan* (Office of Intermodal Planning and Investment, 2010). In addition, the Hampton Roads

[1] NEPA and FHWA's regulations for Environmental Impact and Related Procedures can be found at 42 USC § 4332(c), as amended, and 23 CFR § 771, respectively.
[2] NHS consists of major roadways important to the nation's economy, defense, and mobility. The NHS includes the interstate highway system as well as other roads connecting to major ports, airports, public transportation facilities, or other intermodal transportation services.
[3] STRAHNET is a system of highways important to the United States' strategic defense policy providing defense access, continuity and emergency capabilities for defense purposes.
[4] CoSS are considered to be integrated, multimodal systems of transportation facilities that connect activity centers within the Commonwealth.

Transportation Planning Organization (HRTPO) recommended to FHWA and the United States Department of Transportation (USDOT) that I-64, from Battlefield Boulevard to the I-664 and I-264 interchanges at Bowers Hill, to be included in the National Freight Network under MAP-21 (HRTPO, January 2014).

I-64 is the only interstate highway providing access into and out of Hampton Roads for the approximately 1.7 million people living in the region (Weldon Cooper Center, 2012). In addition, I-64 provides access to numerous tourist destinations, and over 15 military installations in the region. It also serves freight movement to and from the port facilities in the region.

1.2.2 Previous Studies and Related Projects

As an essential roadway facility serving Hampton Roads, the southern segment of the Hampton Roads Beltway/I-64 corridor has been the subject of a number of transportation studies over the past quarter-century. These studies include:

- *1995 Hampton Roads Congestion Management System*: This planning study recommended adding one General Purpose (GP) lane in each direction within the current study area.
- *1996 Major Investment Study (MIS) for I-64 Corridor Improvements from Route 168 to Interstate Route I-264:* This planning study included a range of alternatives identified to address the transportation needs in the corridor, such as additional GP lanes; High Occupancy Vehicle (HOV) lanes; light rail transit (LRT); public bus transit; freight rail; Transportation System/Demand Management; bikeway/pedestrian facilities; and aviation improvements. The MIS included recommendations to expand GP lanes through the current study area (VDOT, 1996).
- *1997 I-64 Widening and HOV Study EA:* This study evaluated the potential transportation improvements between Battlefield Boulevard (Route 168) and Route 190. The preferred alternative included adding one HOV lane and one GP lane in each direction (VDOT, 1997). FHWA issued a Finding of No Significant Impact (FONSI) for the proposed project on December 17, 1997. This study was revisited in 2007, when VDOT and FHWA drafted a Revised EA to re-evaluate impacts (VDOT, 2007). The 2007 Revised EA documented a shift in the western project limits to the I-464 interchange. The improvements evaluated in the Revised EA were completed, resulting in the construction of additional lanes and sound walls east of the I-64/I-464 interchange.
- *1999 EA/Draft Section 4(f) Evaluation Interstate-64 Improvements*: This study evaluated transportation improvements on I-64, from Route 190 to I-264 at Bowers Hill. The recommended preferred alternative included adding one HOV lane and one GP lane in each direction, as well as the phased construction of two identical and parallel fixed high-level bridges with four lanes in each direction. A FONSI was never issued by FHWA for the project and funding for design and construction was not available.

1.3 NEEDS FOR THE PROJECT

Based on the background information discussed above, information gathered during public and agency meetings, and the analysis of recent data collected for this study, a number of transportation needs have been identified for the study area and are described in detail below. A base model year of 2013 is being applied to capture existing traffic conditions within the study area and a design year of 2040 was forecasted for future traffic conditions within the study area.

The purpose of the proposed study is to develop alternatives to address transportation capacity and improve roadway and bridge conditions throughout the corridor. To meet this purpose, the following needs will be considered

- Improve capacity by addressing congestion, system linkage and lane continuity, and intermodal connectivity;
- Enhance corridor safety by addressing conditions that contribute to vehicular crash incidences;
- Improve the ability of the corridor to function as a key emergency evacuation route; and,
- Address the High Rise Bridge improvements.

1.3.1 Improve Capacity

Existing Conditions

Congestion

Highway congestion and traffic volumes are expressed in terms of Level of Service (LOS), which is a qualitative measure of operational conditions within a traffic stream, based on criteria such as speed and travel time, freedom to maneuver, traffic interruptions, comfort, and convenience. In addition to considering highway LOS to measure the congestion of a roadway facility, Average Daily Traffic (ADT) is used to measures the total volume of traffic passing a point or segment of a highway facility in both travel directions.

Table 1-1 defines the various LOS standards and their relationship to roadway segment congestion. The American Association of State Highway and Transportation Official's (AASHTO) guidance, *A Policy on Geometric Design of Highways and Streets* (AASHTO, 2011) is referenced in the Code of Federal Regulations and is used to provide the LOS standards for highways on the NHS, which includes I-64. The LOS standard for mainline operations along freeway facilities is LOS B in rural areas and LOS C in urban areas. Based on FHWA guidelines and as described in **Section 1.1**, I-64 within the study area is classified as an urban freeway (VDOT, 2005). An analysis of the existing LOS and ADT along roadway segments within the study area reveals high levels of traffic and inhibited travel, indicative of severe congestion. As shown in **Table 1-2,** the current LOS within the study area is D or worse for the I-64 freeway facility based on existing peak hour volumes, and therefore is worse than the AASHTO standard value of LOS C for this type of facility. Specifically, the freeway segment that includes the High Rise Bridge is LOS F in the worst peak hour with heavy congestion. A number of merge or diverge movements operate at LOS D or worse under existing conditions and are discussed further in the ***Traffic & Transportation Technical Report*** (VDOT, 2014m). The merge from northbound Route 17 to I-64 West operates at a LOS E. The weaves along I-64 East and I-464 South at the interchange of I-64 and I-464 operate at LOS F. The ramp from northbound Oak Grove Connector to the I-64 collector-distributor

(C-D) road operates at LOS F. Thus, the corridor experiences heavy congestion, particularly between Route 17 and I-464 during peak hours.

Table 1-1: Roadway Segment LOS Descriptions

LOS		Description	Congestion Level
	A	Free traffic flow with low volumes and high speeds. Speeds controlled by driver desires, speed limits, and physical roadway conditions. Vehicles almost completely unimpeded in their ability to maneuver within the traffic stream.	Low
	B	Stable traffic flow, with operating speeds remaining near free flow. Drivers still have reasonable freedom to maneuver with only slight restrictions within the traffic stream.	Low
	C	Stable flow, but with higher volumes, more closely controlled speed and maneuverability that is noticeably restricted.	Moderate
	D	Approaching unstable flow with tolerable operating speeds maintained, but considerably effected by changes in operating conditions. Freedom to maneuver within the traffic stream is more noticeably limited.	Moderate
	E	Unstable flow with low speed and momentary stoppages. Operations are at capacity with no usable gaps within the traffic stream.	Severe
	F	Forced flow with low speed. Traffic volumes exceed capacity and stoppages for long periods are possible.	Severe

Source: *Highway Capacity Manual*, Transportation Research Board, 2010.

Table 1-2: Existing and Future LOS along I-64 Segments in the Study Area

I-64 Roadway Segments	Existing (2013)		Design Year No Build (2040)	
	LOS[1]	ADT[2]	LOS[1]	ADT
I-464 to Route 190 (0.44 mi)	D	83,200	F	107,600
Route 190 to High Rise Bridge Eastern Approach (0.93 mi)	E	85,600	F	110,400
High Rise Bridge Eastern Approach to High Rise Bridge Western Approach (0.73 mi)	F	85,600	F	110,400
High Rise Bridge Western Approach to Route 17 (George Washington Highway) (2.28 mi)	E	85,600	F	110,400
Route 17 (George Washington Highway) to South Military Highway (Route 13/Route 460) (1.6 mi)	D	75,600	F	108,800
South Military Highway to I-664/I-264 (2.27 mi)	D	78,400	F	105,900

[1] LOS is shown for the worst peak hour and peak direction.

System and Lane Continuity

The flow (or operation) of vehicles along a freeway is influenced by many design features, including lane continuity (route continuity), balance, and roadway design. These features affect whether motorists have time to make smooth transitions into adjacent lanes and ramps without impeding the progress of other vehicles on the roadway. Per AASHTO, "the principle of route continuity simplifies the driving task in that it reduces lane changes, simplifies signing, delineates the through route, and reduces the driver's search for directional signing." Within the study area, I-64 is comprised of two lanes in each direction which currently operates at LOS D or worse; however, just east and west of the study area there are four or more lanes in each direction. On I-64 East through the study area, the Hampton Roads Beltway terminates and ties into I-664 and I-264 (Bowers Hill interchange), both of which consists of two travel lanes in each direction. However, as I-264 continues towards Portsmouth, it transitions into three travel lanes in each direction, while I-664 maintains two travel lanes in both directions. Traveling on I-64 West through the study area, east of the I-464 interchange, I-64 transitions into four travel lanes (three GP lanes and one HOV lane) in each direction. Therefore, the lack of system and lane continuity described above contributes to the congestion and safety issues experienced on I-64.

Support Intermodal Connectivity

The I-64 corridor is an important element within the transportation infrastructure of the Hampton Roads region. In addition to linking travelers to work and home, I-64 also provides opportunities to connect with various transportation modes in the region (**Figure 1-2**), including:

- *HOV/Ride Sharing:* Currently, HOV lanes (minimum occupancy of two passengers) within the Hampton Roads region are located along I-264 (Virginia Beach and Norfolk), I-64 (Norfolk and Chesapeake), and I-64 (Hampton and Newport News). East of the study area, I-64 transitions into four travel lanes in each direction, one of these four lanes functions as an HOV lane during the weekdays between 6:00 am and 8:00 am (AM peak rush) and 4:00 pm and 6:00 pm (PM peak rush). In addition to HOV, Hampton Roads Transit (HRT) TRAFFIX provides 12 Park and Ride lots within the Hampton Roads region at the following locations:
    - **Chesapeake:** Mall entrance and Greenbrier Parkway;
    - **Hampton:** Hampton Transportation Center;
    - **Newport News:** Route 60 and Old Courthouse Road as well as Jefferson Avenue and Yorktown Road;
    - **Norfolk:** Harbor Park light rail station, Ballentine/Broad Creek light rail station, Military Highway light rail station, Newtown Road light rail station, and Fort Norfolk light rail station;
    - **Portsmouth:** Court Street and Crawford Parkway; and,
    - **Virginia Beach:** Silverleaf Commuter Transportation Center as well as Indian River Road and Reon Drive.
- *Local/Regional Transit:* HRT provides paratransit and full bus service to Chesapeake and throughout Hampton Roads. Specifically, HRT Max Route 967 follows I-64 through the study area to connect Virginia Beach to Chesapeake and Newport News from the Military Highway Station to the Newport News Transit Center.
- *Freight Rail:* Chesapeake is the mid-Atlantic terminus for the Norfolk Southern Corporation and CSX Transportation Corporation Railroads. According to the HRTPO's *Regional Performance*

Measures, Values and Targets report *(2012)*, thirty percent of all freight from the Port of Virginia is transported via rail. I-64 provides freight transporters access to these rail facilities from which freight is shipped by rail to the Midwest. **Figure 1-2** provides the locations of these rail facilities and demonstrates the critical relationship they have with I-64.

- *Aviation:* The Hampton Roads Executive Airport, a privately owned general aviation facility, is located approximately three miles west of the western terminus of the study area. It is classified as a reliever airport for Norfolk International Airport, which is located approximately 10 miles northeast of the study area. The Chesapeake Regional Airport, a small public use airport, also is located approximately eight miles south of the study area's eastern terminus, along Dominion Boulevard (Route 17). The Hampton Roads Beltway also provides access to the Newport News/Williamsburg International Airport, which is located approximately 30 miles northwest of the study area.

Congestion throughout the study area hinders effective access and connectivity to these regional intermodal options.

Future Conditions

Congestion

Hampton Roads existing population of approximately 1.7 million individuals is expected to increase to over two million individuals by the 2040 design year (HRPDC, 2013). As shown in **Table 1-2**, all mainline sections along I-64 between I-664/I-264 at Bowers Hill and Route 190 operate at LOS D or worse in existing conditions. In 2040, all segments along I-64 between I-664/I-264 and I-464 operate at LOS F. In addition, many ramps and weaving segments will degrade to LOS F. Specifically, all four ramp junctions along I-64 at the US 13 interchange will operate at LOS F and are discussed further in the ***Traffic & Transportation Technical Report*** (VDOT, 2014m). All four merges/diverges along mainline I-64 at the US 17 interchange operate at LOS F. All three weaves along the mainline segments at the I-64 and I-464 interchange operate at LOS F.

System and Lane Continuity

The lack of lane continuity within the study corridor would contribute to diminishing LOS and safety deficiency as described in **Section 1.3.2**. In order to improve capacity and reduce congestion, there is a need to provide lane continuity among adjacent interstate facilities including I-264, I-464, and I-664.

Support Intermodal Connectivity

In the future, I-64 is anticipated to remain an important connection among intermodal transportation facilities near the study area. In addition to the existing modal options, there is a potential for the expansion of light rail services in the Hampton Roads region. A 2003 *Chesapeake Corridor Alternatives Analysis Report* determined that it would not be feasible to implement LRT in Chesapeake; however, recommendations have been included in the City's *2026 Comprehensive Plan* to preserve existing rail corridors in order to provide future rail options without extensive impacts (City of Chesapeake Planning Department, 2005).

In October 2009, the HRTPO created a High-Speed and Intercity Passenger Rail Steering Committee to investigate improving passenger rail service between Richmond and Hampton Roads. To date, two

reports have been produced: the *Hampton Roads High-Speed and Intercity Passenger Rail Preliminary Vision Plan* (2010) and the *Hampton Roads Strategic Long-Term High-Speed and Intercity Passenger Rail Plan – Phase I (B) Blueprint Study* (2011). HRT is currently conducting the Virginia Beach Transit Extension Study (VBTES) that evaluates using former freight rail line right-of-way for transit use. The VBTES corridor is located to the northeast of the study area, roughly paralleling I-264 to the south (HRT, 2013). Furthermore, the Hampton Roads Passenger Rail Study identifies a high-speed rail corridor from Richmond to Norfolk, with a station identified at Bowers Hill, just east of the study area (HRTPO, March 2013). The Virginia Department of Rail and Public Transportation (DRPT) is working with Norfolk Southern and Amtrak to add a track at their Portlock Rail Yard located north of the study area to accommodate planned Amtrak passenger rail service to Norfolk. In order to facilitate efficient connections to planned station locations in the Hampton Roads area, there is a need for improved intermodal relationships within and around the study area.

1.3.2 Enhance Corridor Safety

Existing Conditions

Table 1-3 lists the current crash rates for roadway segments in the study area as well as regional averages. The most recent average annual crash rates on I-64 east exceed regional average rates, in certain areas of the study area. For example, the eastern segment of I-64, between I-464 and the High Rise Bridge, exceeds the regional average for rear end crashes of 0.486 per 100 million vehicles miles travelled (MVMT) compared to 2.024 per 100 MVMT travelled. Rear end crashes represent the majority of crashes in the study area. This results from increasing levels of congestion that can lead to stop and go conditions.

The capacity and lane continuity conditions described above contribute to crashes within the study area, specifically along the I-64 corridor as it approaches the High Rise Bridge. Within the study area, I-64 is a four lane roadway with a ten foot outside (full width) shoulder and a four foot inside shoulder, divided by a tree and grass median. At the bridge approaches, the grass median narrows to accommodate a concrete barrier. The concrete barrier continues across the Bridge and both the inside and outside shoulders narrow down to less than four feet. These shoulders do not meet current AASHTO or VDOT geometric design standards for this type of facility. VDOT standards require a four-foot paved left shoulder and a twelve-foot paved right shoulder.

Table 1-3: Existing Crash and Safety Data within the Study Area (Average Annual Crash Rates)

I-64 Segment	Type of Crash	Existing (2007 - 2009) Crashes (per 100 million vehicle miles travelled)		
		East	West	Regional Average
I-464 Interchange	Rear End	2.024	0.175	0.486
	Sideswipe	0.377	0.113	0.116
	Fixed Object	0.179	0.100	0.233
	Equivalent Property Damage Only	4.306	0.802	2.030
High Rise Bridge	Rear End	0.798	0.295	0.486
	Sideswipe	0.044	0.156	0.116
	Fixed Object	0.266	0.416	0.233
	Equivalent Property Damage Only	2.791	1.491	2.030
High Rise Bridge Approaches	Rear End	0.896	0.418	0.486
	Sideswipe	0.143	0.060	0.116
	Fixed Object	0.183	0.060	0.233
	Equivalent Property Damage Only	2.057	1.111	2.030
Route 17 / George Washington Highway Interchange	Rear End	0.273	0.533	0.486
	Sideswipe	0.088	0.110	0.116
	Fixed Object	0.185	0.294	0.233
	Equivalent Property Damage Only	1.804	2.078	2.030
Route 13 / South Military Highway Interchange	Rear End	0.186	0.329	0.486
	Sideswipe	0.062	0.143	0.116
	Fixed Object	0.202	0.286	0.233
	Equivalent Property Damage Only	0.729	1.919	2.030

Future Conditions

Crashes are expected to increase in the future as traffic volumes increase and no geometric improvements are made to the roadway. In order to improve corridor safety, there is a need to address conditions that contribute to vehicular crashes such as reducing congestion and providing adequate shoulders throughout the project area.

1.3.3 Improve Emergency Evacuation

Existing Conditions

According to FHWA's Emergency Transportation Operations (ETO), emergency evacuations occur on a daily basis throughout the U.S., and include many types and causes. They can be large scale and of a natural cause or they can be a localized incident. Because the study area is located within a coastal region, emergency evacuation plans are critical to ensuring public safety, particularly as it relates to potential hurricanes. In the event of a major storm occurrence, I-64 has been identified in the *VDOT Hurricane Evacuation Guide* as an evacuation route for Virginia Beach, Chesapeake, Suffolk, Norfolk, and Portsmouth (VDOT, 2013). **Table 1-4** lists the most recent Category 3 hurricane events[5] occurring within the last two decades that affected the Hampton Roads region. In addition, the evacuation statuses associated with each of these storms are provided.

[5] The Saffir-Simpson Hurricane Wind Scale is a 1 to 5 rating based on a hurricane's sustained wind speed. Storms measuring Category 3 or higher, with winds greater than 111 miles per hour, are considered to be major hurricanes resulting in increasingly devastating damage.

Table 1-4: Hurricanes Affecting Hampton Roads within the Last Two Decades

Hurricane Name	Saffir-Sampson Storm Category at Peak Strength	Date of Occurrence	Hampton Roads Regional Evacuation Results
Emily	Category 3	August-September 1993	Voluntary evacuations issued.
Fran	Category 3	August-September 1996	Voluntary evacuations issued.
Bonnie	Category 3	August 1996	Voluntary evacuations issued locally.
Isabel	Category 5	September 2003	Mandatory evacuations were required for Hampton, Chesapeake, Norfolk, Virginia Beach, Suffolk, Newport News, Portsmouth, Poquoson, Isle of Wright, and York.
Irene	Category 3	August 2011	Mandatory evacuations were issued for parts of Virginia Beach, Norfolk, Portsmouth, Chesapeake, Hampton, and Newport News. Elsewhere, voluntary evacuations were recommended.
Sandy	Category 3	October 2012	Voluntary evacuations were recommended for Chesapeake, Hampton, Gloucester, and Virginia Beach.

A report titled *Highway Evacuations in Selected Metropolitan Regions: Assessment of Impediments* was completed by the U.S. Department of Transportation in 2010. The purposes of this report included, assessing mass evacuation plans for the country's high-threat, high-density areas and identifying and prioritizing deficiencies on those routes that could impede evacuations. This report identified Hampton Roads as one of the critical metropolitan areas under review. The region has also been referenced by the U.S. Department of Defense as the "military epicenter" of the east coast (Military Advantage Inc., 2013). This is important to note because the I-64 corridor links with Route 17 and Route 460, both of which are identified as hurricane evacuation routes and lack appropriate Intelligent Transportation System (ITS) that would help manage evacuations (VDOT, 2013).

Future Conditions

Hampton Roads existing population of approximately 1.7 million individuals is expected to increase to over two million individuals by the 2040 design year (HRPDC, 2013). This increase in population would result in higher volumes of evacuees utilizing designated evacuation routes during hurricanes and other emergency events. Because I-64 is the only interstate providing access to and from Hampton Roads, there is a need to ensure it continues to provide adequate evacuation opportunities for a growing population.

1.3.4 High Rise Bridge Improvements

Existing Conditions

The High Rise Bridge was constructed in 1969. Bridges of that era were designed for an approximate 50 years of service life. Modern technologies and methods, however, have allowed the service life of these bridges to be extended up to 75 years. Since its construction, the High Rise Bridge has received routine maintenance and repairs (including 1992 deck reconstruction and scheduled milling of the existing bridge decking and repaving) in order to maintain a safe structure and achieve an extended service life. These maintenance and repair activities add lengthy travel delays to a facility that currently experiences moderate to severe LOS when traffic is moving without incident. If the bridge is required to be closed, VDOT establishes detour routes for the traveling public, including rerouting to the I-264 Downtown Tunnel, which currently operates at LOS E or LOS F during peak periods (HRTPO 2003).

In addition to delays and detours related to maintenance activities, the High Rise Bridge opens approximately 25 times per year to accommodate large vessels traveling on the Southern Branch of the Elizabeth River. Each opening can result in interstate traffic being halted for approximately 17 minutes to allow for the passage of one vessel (VDOT, 2014j).

Future Conditions

In order to achieve the 75 year maximum service life from the High Rise Bridge, maintenance and repair activities to the electrical system and controls, mechanical system, and hydraulic system, as well as those noted in **Section 1.3.1**, would only become more prevalent and disruptive. Some of these maintenance and repair activities would disrupt the crossing schedule of the travelling vehicles and marine vessels. This would cause delay in transportation time for the traveling public. Even with these maintenance activities, by the design year 2040, the bridge is expected to be near the end of its life cycle. The present width of the bridge is approximately 67 feet, which with the future traffic forecast would not meet current design criteria and would contribute to more traffic congestion and worsening safety conditions. Finally, the same capacity, congestion, and safety issues that were described along the corridor would continue to exist on the bridge. In order to meet the overall needs of the corridor, there is a need to address these conditions on the High Rise Bridge.

1.4 PURPOSE AND NEED SUMMARY

Based on the existing and future transportation conditions described above, the purpose of the proposed study is to develop alternatives to address transportation capacity and improve roadway and bridge conditions throughout the corridor. To meet this purpose, the following needs will be considered:

- Improve capacity by addressing congestion, system linkage and lane continuity, and intermodal connectivity;
- Enhance corridor safety by addressing conditions that contribute to vehicular crash incidences;
- Improve the ability of the corridor to function as a key emergency evacuation route; and,
- Address the High Rise Bridge improvements.

I 64/High Rise Bridge Corridor Study Area*

Water Bodies

Great Dismal Swamp

*The study area is a buffer around the road corridor that includes all natural, cultural and physical resources that must be analyzed in the NEPA document. It does not imply right-of-way take or construction impact.

Mapping Source: VDOT and City of Chesapeake

Figure 1-1 Study Area

Interstate 64/High Rise Bridge Corridor Study Environmental Assessment

City of Chesapeake

State Project Number: 0064-131-783, P101; UPC: 104366
Federal Project Number: NH-IM-064-3(481)

N

VDOT Virginia Department of Transportation

0 0.25 0.5 1 1.5 Miles

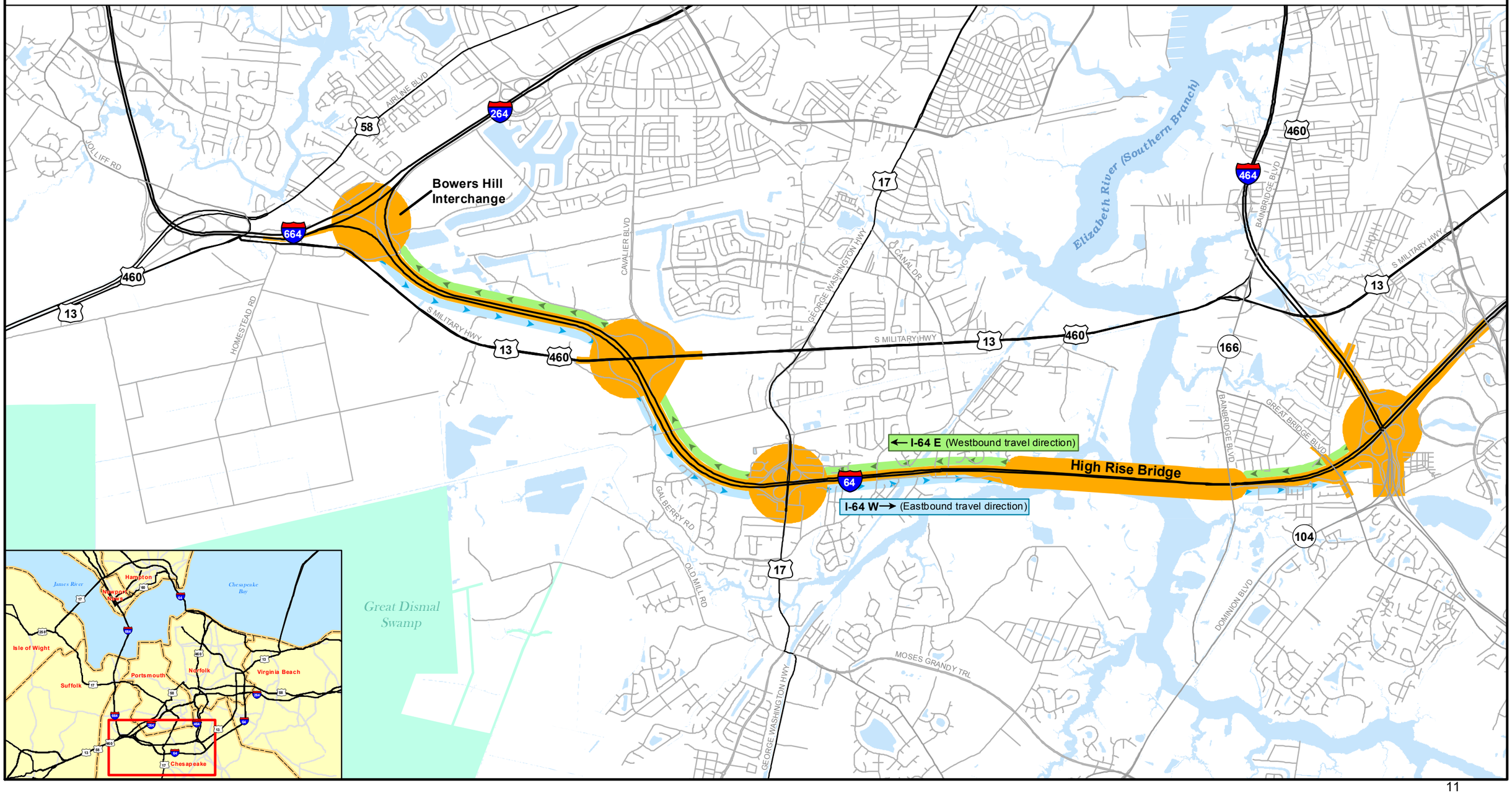

Airport
Park & Ride
Passenger Rail & Freight Rail
I 64/High Rise Study Area
Water Bodies
Great Dismal Swamp
Interstate
Major Roads
City Boundary
Mapping Source: VDOT and City of Chesapeake
State Project Number: 0064-131-783, P101; UPC: 104366
Federal Project Number: NH-IM-064-3(481)
Figure 1-2 Intermodal Connections
Interstate 64/High Rise Bridge
Corridor Study
Environmental Assessment
City of Chesapeake
VDOT Virginia Department of Transportation
Chesapeake Bay
Newport News/Williamsburg International Airport
Newport News
James River
Hampton
Elizabeth River
Norfolk International Airport
Norfolk
Virginia Beach
Portsmouth
Hampton Roads Executive Airport
Chesapeake
Suffolk
High Rise Bridge
CSXT
Norfolk Southern
Great Dismal Swamp
Chesapeake Regional Airport

Chapter 2.0 ALTERNATIVES

VDOT considered a broad range of alternatives during the planning stage of the Interstate 64/High Rise Bridge Corridor Study. This chapter discusses the range of alternatives evaluated, the factors considered in their evaluation, and alternatives retained and not retained for detailed study. The alternatives retained for detailed study include:

- The No-Build Alternative;
- Eight Lane Build Alternative (Candidate Build Alternative 1 [CBA 1]); and,
- Eight Lane Build – Managed Alternatives (Candidate Build Alternative 2 [CBA 2]).

2.1 ALTERNATIVE DEVELOPMENT PROCESS

The alternatives development process began with the development of the Purpose and Need of the study. Engineering design criteria were then established, which were used in identifying a reasonable range of alternatives capable of meeting the Purpose and Need of the study. Additionally, as discussed in **Chapter 4.0 (Coordination and Comments)** of this EA, project scoping through agency and public involvement was initiated early in this process to solicit input in the development of the Purpose and Need and the evaluation of alternatives.

2.1.1 Purpose and Need

The Purpose and Need of the study was defined and agreed upon by VDOT and FHWA. The current and future needs identified in the Purpose and Need were used to determine the initial range of alternatives and as a first line of screening criteria to evaluate the different alternatives. The project Purpose and Need is described in detail in **Chapter 1.0 (Purpose and Need)** of this EA.

2.1.2 Establishment of Design Criteria

Alternatives were developed using current design guidelines and structural design parameters. All guidelines were based on AASHTO's *A Policy on the Geometric Design of Highways and Streets* (AASHTO, 2011), the VDOT Road Design Manual (July, 2014) and VDOT Bridge Design Manual (VDOT, 2014e). The design criteria are based on the functional classification of the roadway as an urban freeway. Detailed tables showing the Design Criteria used for this study are found in ***Appendix A*** of the ***Alternatives Development Technical Report*** (VDOT, 2014b).

2.2 ALTERNATIVES SCREENING APPROACH AND CRITERIA

The I-64/High Rise Bridge Corridor Study focuses on four primary need items: improving capacity, enhancing corridor safety, improving the corridor to function as a key emergency evacuation route, and addressing the High Rise Bridge improvements. **Table 2-1** provides a list of **s**creening criteria that were derived from each of these need elements and were used to determine the ability of each alternative to address the identified needs.

In addition to the screening criteria derived from the Purpose and Need of the study, agency consultation during the development of the alternatives presented a unique opportunity to screen alternatives based on input from the USCG and FHWA's other federal partners, see ***Alternatives Development Technical Report*** (VDOT, 2014b), ***Navigational Evaluation Technical Memorandum*** (VDOT, 2014j), and **Chapter 4.0 (Coordination and Comments)** of this EA.

Table 2-1: Screening Criteria

Need Element	Criteria
Improve Capacity	• LOS • Lane Continuity
Enhance Corridor Safety	• LOS • Shoulders • Lane Continuity
Improve the Ability of the Corridor to Function as a Key Emergency Evacuation Route	• Increase Capacity • Shoulders • Lane Continuity
Address the High Rise Bridge Improvements	• LOS • FHWA Guidelines • Agency Consultation

Except for the No Build Alternative, if a Build Alternative was deemed not feasible or reasonably capable of meeting the criteria, then the alternative was not retained for detailed study.

2.3 ALTERNATIVES NOT RETAINED FOR DETAILED STUDY

At the conclusion of the screening process, several mainline and bridge options were not retained for detailed study. The description of alternatives and options and justification for not retaining the alternatives is summarized below. For detailed information, see the ***Alternatives Development Technical Report*** (VDOT, 2014b) and the ***Traffic and Transportation Technical Report*** (VDOT, 2014m).

2.3.1 Mainline Alternatives

Transportation System Management (TSM) / Transportation Demand Management (TDM)

TSM typically consists of strategies that improve traffic flow, improve signalization, convert existing GP lanes to managed lanes, improve intersections, and/or implement information programs. TDM typically consists of strategies that encourage new driving habits through staggered commuting hours, telecommuting, car and vanpooling, ridesharing and the utilization of park and ride facilities.

The TSM/TDM Alternative does not include capacity improvements and, therefore, does not meet the Purpose and Need of the study. It was not retained as an individual stand-alone alternative because it does not address the capacity, safety, or evacuation needs of the corridor. The retained Build Alternatives do not preclude TSM/TDM elements should they be considered in the future.

Six Lane Build Alternative

This alternative would include construction of two additional lanes of capacity (one lane in each direction) within the study area. The six lanes under this alternative are GP Lanes (GP) and are available for use by the general public without any restrictions or tolls. The Six Lane Build Alternative would not provide adequate congestion relief for current or future traffic within the safety corridor. The traffic analysis conducted for this study projected a LOS D and LOS E throughout the study area under this alternative. As such, this alternative does not meet the goal established by VDOT and FHWA to generally achieve a LOS C through the study area and was not retained for detailed study.

Ten Lane Build Alternative

This alternative would include construction of six additional lanes of capacity (three additional lanes in each direction) within the study area. The ten lanes under this alternative are GP Lanes and are available for use by the general public without any restrictions or tolls. The Ten Lane Build Alternative was not retained for detailed study because the additional capacity provided by the Ten Lane Build Alternative would result in unnecessary increases in costs, environmental and right-of-way impacts not realized by the Eight Lane Build Alternative and Eight Lane Build – Managed Alternative.

Ten Lane Build – Managed Alternative

Similar to the Ten Lane Build Alternative, this Alternative was not retained for detailed study because it would result in unnecessary project elements at a greater cost and greater potential impacts than the other build alternatives.

2.3.2 Bridge Alternatives

Several bridge options were evaluated for both location of the proposed bridges, with respect to the existing crossing, and the type of bridge.

Bridge Location

Northern Shift Option

This option would include the construction of two new bridges north of the existing bridge. The purpose of this option was to have the ability to build the two new structures simultaneously while maintaining traffic on the existing bridge. This option would require a realignment of I-64 to the north, of approximately 200 feet, along the approaches to the new bridges and would not utilize much of the existing roadway footprint along these approaches. Preliminary analysis indicated that the required realignment would result in excessive environmental and property impacts. These impacts would be greater than those of other bridge locations investigated that utilize the existing roadway alignment. During the May 2014 Federal Partnering meeting, the United States Army Corps of Engineers (USACE) concurred that the potential impacts appeared to be excessive. Therefore this option was not retained for detailed study; see **Chapter 4.0 (Coordination and Comments)** of this EA.

Southern Shift Option

This option is similar to the northern shift option, but would result in two new structures being built south of the existing bridge. Given the similar environmental impacts and property impacts, this option was not retained for detailed study; see **Chapter 4.0 (Coordination and Comments)** of this EA.

Split Option

This option would include the construction of a new bridge north of the existing bridge and a second bridge south of the existing bridge. The purpose of this option was to have the ability to build the two new structures simultaneously while maintaining traffic on the existing bridge. The proposed roadway approaches would be shifted north and south respectively, by approximately 100 feet in each direction, to tie in with the proposed location of the new bridges. Preliminary analysis indicated that the required realignment of I-64 along the approaches to the new bridges would result in excessive environmental and property impacts. These impacts would be greater than those of other bridge locations investigated that utilize the existing roadway alignment. At the Study Team meeting held in April 2014, several study team members expressed their concern with this option given the additional environmental and property impacts. Furthermore, at the May 2014 Federal Partnering meeting, USACE concurred that the potential impacts appeared to be excessive. Therefore this option was not retained for detailed study; see **Chapter 4.0 (Coordination and Comments)** of this EA.

Partial Northern Shift Option

This option would include the construction of a new bridge north of the existing bridge. The proposed roadway approach would be shifted north, by approximately 100 feet, to tie in with the proposed location of the new bridge. All traffic would be diverted to the new bridge upon its completion and the High Rise Bridge would be demolished. The second bridge would be built on the same alignment as the recently demolished High Rise Bridge, therefore minimizing environmental and property impacts. Upon completion of the second bridge, traffic would be diverted back to the new bridge.

Preliminary analysis indicated that the partial northern shift option would result in excessive environmental and property impacts. These impacts would be greater than the southern shift option. At the May 2014 Federal Partnering meeting, USACE stated that the impacts to a natural system, such as Hodges Creek, that could occur under this option would not be viewed favorably during the permitting process when compared to impacts that could occur to a manmade wetland mitigation bank under the Partial Southern Shift Option. Therefore this option was not retained for detailed study; see **Chapter 4.0 (Coordination and Comments)** of this EA.

2.3.3 Bridge Type

Bascule Span Bridge – 65-Foot Vertical Clearance

The Bascule Span Bridge Option would consist of the construction of two new bascule spans, assumed to be similar in style and 65 foot clearance height of the existing bridge. According to 23 CFR 650.809, "A fixed bridge shall be selected wherever practicable. If there are social, economic, environmental or engineering reasons which favor the selection of a movable bridge, a cost benefit analysis to support the need for the movable bridge shall he prepared as a part of the preliminary plans". During the development of the ***Navigational Evaluation Technical Memorandum*** (VDOT, 2014j), no reasons

requiring a movable bridge were identified. Therefore, based on 23 CFR 650.809, this option was eliminated from detailed study.

2.4 ALTERNATIVES RETAINED FOR DETAILED STUDY

At the conclusion of the screening process three mainline alternatives and two bridge options have been retained for detailed study. All of the Build Alternatives that are being retained for detailed study could occur via the construction of operationally independent sections. An operationally independent section can be built and function as a viable transportation facility, even if the rest of the work described in the Revised EA is never built. If FHWA and VDOT intend to advance one of the Build Alternatives in operationally independent sections, additional details on this process would be included in the EA.

The description of alternatives and bridge options and justification for retaining them is summarized below. For more detailed information refer to the ***Alternatives Development Technical Report*** (VDOT, 2014b), ***Navigational Evaluation Technical Memorandum*** (VDOT, 2014j), and the ***Traffic and Transportation Technical Report*** (VDOT, 2014m).

2.4.1 Mainline Alternatives

No Build Alternative

In accordance with the regulations implementing NEPA (40 CFR § 1502.14(d)), the No Build Alternative has been included for evaluation in this EA to serve as a benchmark for the comparison of future conditions and impacts. The No Build Alternative would retain the existing I-64 interstate, associated interchanges and the High Rise Bridge in their present configurations, and allow for routine maintenance and safety upgrades. This alternative also assumes that the projects currently programmed and funded in VDOT's Fiscal Year 2015-2020 Six-Year Improvement Program and the HRTPO's Constrained Long Range Plan would be implemented.

The No Build Alternative would not address the Purpose and Need of the study because routine maintenance and other programmed projects would not improve capacity, safety or the corridor as an evacuation route. In accordance with the implementing regulations for NEPA (40 CFR § 1502.14(d)), the No Build Alternative has been retained for detailed study to serve as a benchmark for the comparison of future conditions and impacts. Under the No Build Alternative, LOS would generally be LOS F as described in **Table 1-1**.

Eight Lane Build Alternative (CBA 1)

As shown in **Figure 2-1** through **Figure 2-6**, CBA 1 would include construction of four additional lanes of capacity (two lanes in each direction) on I-64. The eight lanes under this alternative are GP Lanes and are available for use without any restrictions or tolls. Wherever possible, the additional lanes would be constructed towards the existing median of I-64. A grass median would be maintained west of the Route 17 interchange, based on existing median width and spacing needs. Approaching the Route 17 interchange, as the grass median narrows, the eastbound and westbound directions would be separated by a concrete traffic barrier. Typical Sections for CBA 1 are shown in **Figure 2-7** through **Figure 2-9**.

The widening of I-64 to eight lanes would also require the following:

- Reconstruction of I-264 ramp bridge over I-64 East to I-664 ramp
- Widening of I-64 bridges over Rotunda Avenue
- Route 13 – Military Highway
    - Widening of I-64 bridges over Route 13
    - Geometric improvements to ramps at Route 13 interchange
    - Capacity improvements at intersections with ramp terminals
- Widening of I-64 bridges over Yadkin Road
- Route 17 – George Washington Highway
    - Reconstruction of Route 17 bridge over I-64
    - Geometric and capacity improvements to ramps at Route 17 interchange
    - Capacity improvements at intersections with ramp terminals
- Widening of I-64 bridges over Shell Road
- Extension of culvert along Gilmerton Cut
- Reconstruction of High Rise Bridge to accommodate four travel lanes in each direction
- Reconstruction of the Route 190 bridge over I-64
- I-464
    - Reconstruction of I-464 bridge over I-64
    - Geometric and capacity improvements to ramps at I-464 interchange
    - Addition of flyover ramps from I-464 to I-64 West and from the Oak Grove Connector to I-64 West and I-64 East as described above

All of these improvements would require additional right-of-way for construction. These right-of-way needs are illustrated in **Figure 2-1** through **Figure 2-6**. The estimated cost for CBA 1 ranges from $1.86 billion for the 95' Bridge to $2.22 billion for the 135' Bridge.

Ability to Meet Needs

CBA 1 was retained for detailed study because it would meet the capacity needs of the study by providing two additional lanes in each direction. Under this Alternative, LOS would generally be LOS C as described in **Table 1-1.** The additional lanes would generally meet the LOS goals established by VDOT and FHWA. Lane continuity also would be improved by matching the number of lanes to the east of the study area. This would eliminate bottleneck conditions and improve overall safety along the corridor.

In addition, CBA 1 would address geometric deficiencies by improving the I-64 roadway and bridges to meet current design standards. In accordance with *A Policy on the Geometric Design of Highways and Streets* (AASHTO, 2011) and VDOT Bridge Design Manual (VDOT, 2014e), shoulders would be 12 to 14 feet wide to allow space for breakdowns and incident management. All of these factors would improve the I-64 corridor as a key emergency evacuation route.

Eight Lane Build – Managed Alternative (CBA 2)

CBA 2 would be similar to CBA 1, providing four additional lanes of capacity (two lanes in each direction) on I-64. However, some or all of the travel lanes would be managed using tolls and/or vehicle occupancy restrictions. Additionally, expanded local/express bus service or bus rapid transit could be accommodated with this alternative in the GP or the managed lanes. Numerous managed lane scenarios

are possible depending on the type of strategy selected including, but not limited to, HOV lanes, high occupancy toll (HOT) lanes, occupancy restrictions (at least 2 or 3 occupants), or time of day/day of week restrictions.

Due to the number of possible managed lane scenarios, there have been no specific operational scenarios identified at this stage of the study. Accordingly, the following three operational scenarios were developed to establish a sample range of travel demand conditions[6] for this alternative:

- HOV: I-64 currently contains an HOV operation from the I-564 interchange in the City of Norfolk to Battlefield Boulevard, approximately one mile from the eastern limit of the study area. Within the study area, one lane in each direction could be converted to an HOV lane. HOV lanes would only be open to vehicles with multiple occupants. The specific operation and characteristics of the HOV facility would be defined as part of later studies, including occupancy restrictions (HOV 2+ or 3+), time of day/day of week restrictions, location of access points to and from the HOV facilities, type of separation between the HOV lanes and GP lanes, and permitting buses within the HOV lanes. Additional analysis also would be performed as part of later studies to assess the impacts of connecting the existing HOV facility along I-64 that begins in the vicinity of Battlefield Boulevard with a potential future HOV facility. The same bridge and interchange improvements proposed under CBA 1 would occur under this managed lane scenario.

  Based on data collected by VDOT at existing HOV facilities within the region, it is assumed that 15 percent of the total peak hour traffic would utilize the HOV facility in the 2040 design year. As such, the remaining 85 percent of traffic would be spread across the three remaining GP lanes. Under this scenario, LOS for GP lanes would generally be LOS D while HOV lanes would generally be LOS A as described in **Table 1-1**. The study area includes space for the potential for the HOV facility to be two feet wider than CBA 1 to accommodate an HOV operation based on the VDOT Bridge Design Manual (VDOT, 2014e).

- All lanes tolled: Under this option, existing and new capacity along I-64 would be tolled. Additional analysis would be performed as part of later studies to determine the appropriate toll rates. This scenario assumes that all toll collection would be done by overhead gantries with all-electronic tolling used to collect all tolls at highway speeds and not through traditional toll booth operations. Since I-64 would be fully tolled, access and egress would be accommodated via the proposed interchange modifications identified as part of this study under CBA 1. The proposed gantries would fall within the footprint of the study area, as additional widening would not be needed to accommodate toll booths. A toll diversion analysis was performed as part of this study and is included in the ***Traffic and Transportation Technical Report*** (VDOT, 2014m). The results of the analysis indicate that an estimated 19 to 31 percent of traffic would divert from I-64 after the implementation of tolling depending on the toll rate. The largest shift in traffic from I-64 after the implementation of tolling is estimated to utilize the nearby untolled Route 13 / Gilmerton Bridge, due to its proximity and its numerous direct connections to the I-64 corridor,

[6] LOS for the managed lane scenarios were developed as part of the toll diversion analysis and should only be used as an estimate to understand what the potential LOS could be. If a specific managed lane scenario is identified as the preferred alternative, additional traffic analysis would be completed to confirm these estimates.

including Route 17 and I-464. Under this scenario, LOS would generally be LOS C as described in **Table 1-1**.

If a tolling scenario is advanced, VDOT would cooperate with FHWA to implement one of the tolling programs available under the Federal Tolling Programs (FHWA, 2014b). Because tolling all lanes could be a possible option in the future, it was considered in the range of alternatives evaluated.

- Two HOT Lanes + Two GP Lanes (Two HOT / HOV-2 "free" + Two GP): This scenario would include two GP lanes and two HOT lanes in each direction. The HOT lanes would be restricted to vehicles with two or more occupants (HOV 2+) that would travel for free and single occupancy vehicles (SOV) that would pay a toll to use the lane. Further studies would be required to determine the extent of the HOT lanes and locations of access and egress into the facility. These studies could result in additional ramps being required and affect the proposed interchange concept identified as part of this study under the CBA 1. A toll diversion analysis, similar to the previous scenario, was performed as part of this study and is included in the ***Traffic and Transportation Technical Report*** (VDOT, 2014m). The results of the analysis indicate that there would be minimal traffic diversion from I-64 for the Managed Lanes scenario due to the shifting of some traffic to the Managed Lanes and the remaining available GP lanes. Under this scenario, LOS for GP lanes would generally range for LOS E to LOS F, while the HOT lanes would generally range from LOS B to LOS C as described in **Table 1-1**.

  If a tolling scenario is advanced, VDOT would cooperate with FHWA to implement one of the tolling programs available under the Federal Tolling Programs (FHWA, 2014b). Because tolling the new lanes could be a possible option in the future, it was considered in the range of alternatives evaluated.

  As shown in **Figure 2-10** through **Figure 2-12**, the typical section for the HOT Lane scenario would include a four foot buffer separation between the GP lanes and the managed lanes. This four foot buffer in each direction would make the typical section of the Eight Lane Build – Managed Alternative (HOT Lane scenario), eight feet wider than the Eight Lane Build Alternative. The eight feet is not discernible at the scale of the mapping provided and therefore is the same as the mapping show in **Figure 2-1** through **Figure 2-6** for the Eight Lane Build Alternative.

This study does not identify what type of managed lane would be constructed. Moreover, if this alternative is identified as the Preferred Alternative, the Revised EA would include additional specifics of the managed lanes throughout the study area. These specifics could include the identification of additional costs and impacts not quantified as part of this study, including those associated with providing access between the GP and managed lanes at intersections and/or between interchanges.

The estimated cost for CBA 2 ranges from $1.92 billion for the 95' Bridge to $2.30 billion for the 135' bridge. The cost increase for CBA-2 compared to CBA-1 is related to the increased width of the roadway to accommodate the managed lanes.

Ability to Meet Needs

CBA 2 was retained for detailed study for similar reasons as CBA 1. Lane continuity would be improved by matching the number of lanes to the east of the study area. Likewise, existing geometric deficiencies would be improved with the inclusion of wider shoulders. Furthermore, all of these factors would improve I-64 as a key emergency evacuation route.

2.4.2 Bridge Alternatives

Bridge Location

Partial Southern Shift Option

This option would include the construction of a new bridge south of the existing bridge. The proposed roadway approach would be shifted south, by approximately 100 feet, to tie in with the proposed location of the new bridge. All traffic would be diverted to the new bridge upon its completion and the High Rise Bridge would be demolished. The second bridge would be built on the same alignment as the recently demolished High Rise Bridge, therefore minimizing environmental and property impacts. Upon completion of the second bridge, westbound traffic would be diverted back to the new bridge.

During a review of the different bridge options at the May 2014 Federal Partnering meeting, the use of the existing alignment was looked at favorably compared to the Partial Northern Shift Option. Therefore this option was retained for detailed study and is the only location being considered for further analysis. Even though this document investigated several potential bridge locations and discussed in general the phasing of construction, the timing between the construction of the new bridge and the demolition/construction of the existing bridge is beyond the scope of this study.

The Partial Southern Shift Option was retained for detailed study because it would meet the capacity needs of the study by providing two additional lanes in each direction. Under this Alternative, LOS would generally be LOS C as described in **Table 1-1.** The additional lanes would generally meet the LOS goals established by VDOT and FHWA. Lane continuity also would be improved by matching the number of lanes to the east of the study area. This would eliminate bottleneck conditions and improve overall safety along the corridor.

In addition, this Option would address geometric deficiencies by improving the bridges to meet current design standards in accordance with *A Policy on the Geometric Design of Highways and Streets* (AASHTO, 2011) and VDOT Bridge Design Manual (VDOT, 2014e).

Structure Type

Fixed-Span Bridge – 95 Foot-Vertical Clearance

The ***Navigational Evaluation Technical Memorandum*** (VDOT, 2014j) identified a fixed bridge with a 95 foot vertical clearance at mean high water as adequate to meet the reasonable needs of navigation along the Southern Branch of the Elizabeth River. This option also considers widening the horizontal clearance from 125 feet to 135 feet. Widening to 135 feet is based on a 1995 USACE vessel simulation study that was conducted to examine proposed improvements to the Southern Branch of the Elizabeth River. The study suggested increasing the horizontal clearance of the High Rise Bridge to a width of 135 feet (Webb, 1995).

As part of the alternatives analysis this bridge was evaluated from an engineering standpoint to assess impacts and costs and to determine whether this bridge was a practicable solution. Furthermore, based on FHWA Guideline 23 CFR 650 Subpart H, a 95 foot fixed bridge span is a practicable solution for this crossing.

Fixed Span Bridge – 135-Foot Vertical Clearance

In addition to the 95 foot vertical clearance, the ***Navigational Evaluation Technical Memorandum*** (VDOT, 2014j) stated that a fixed bridge with a 135 foot vertical clearance would be considered in this EA. Similar to the 95 foot vertical clearance, this option also considers widening the horizontal clearance from 125 feet to 135 feet.

As part of the alternatives analysis this bridge was evaluated from an engineering standpoint to assess impacts and costs and to determine whether this bridge was a practicable solution. Furthermore, based on FHWA Guideline 23 CFR 650 Subpart H, a 135 foot fixed bridge span is a practicable solution for this crossing.

Area Of Impact
Study Area Bubble
Property Lines
Existing ROW
Area Of Impact Outside Existing ROW
Waterways
School
Wetland Mitigation Site

Mapping Source: VDOT and City of Chesapeake

Figure 2-1 Eight Lane Build Alternative

Interstate 64/ High Rise Bridge Corridor Study
Environmental Assessment

City of Chesapeake

State Project Number: 0064-131-783, P101; UPC: 104366
Federal Project Number: NH-IM-064-3(481)

VDOT Virginia Department of Transportation

SCALE IN FEET
0 300' 600' 900' 1200'

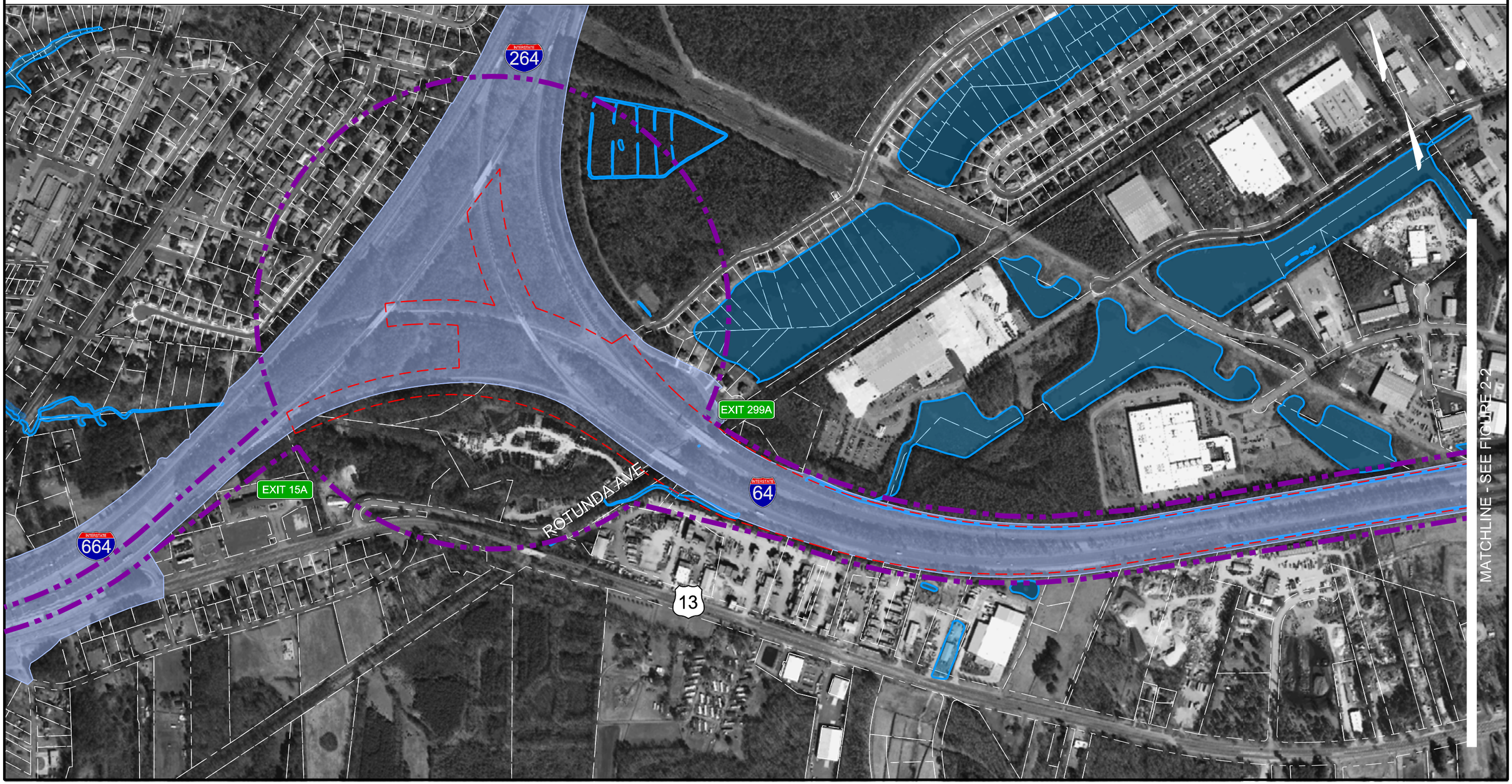

Area Of Impact
Study Area Bubble
Property Lines
Existing ROW
Area Of Impact Outside Existing ROW
Waterways
School
Wetland Mitigation Site

Mapping Source: VDOT and City of Chesapeake

Figure 2-2 Eight Lane Build Alternative

Interstate 64/ High Rise Bridge Corridor Study
Environmental Assessment

City of Chesapeake

State Project Number: 0064-131-783, P101; UPC: 104366
Federal Project Number: NH-IM-064-3(481)

VDOT Virginia Department of Transportation

SCALE IN FEET
0 300' 600' 900' 1200'

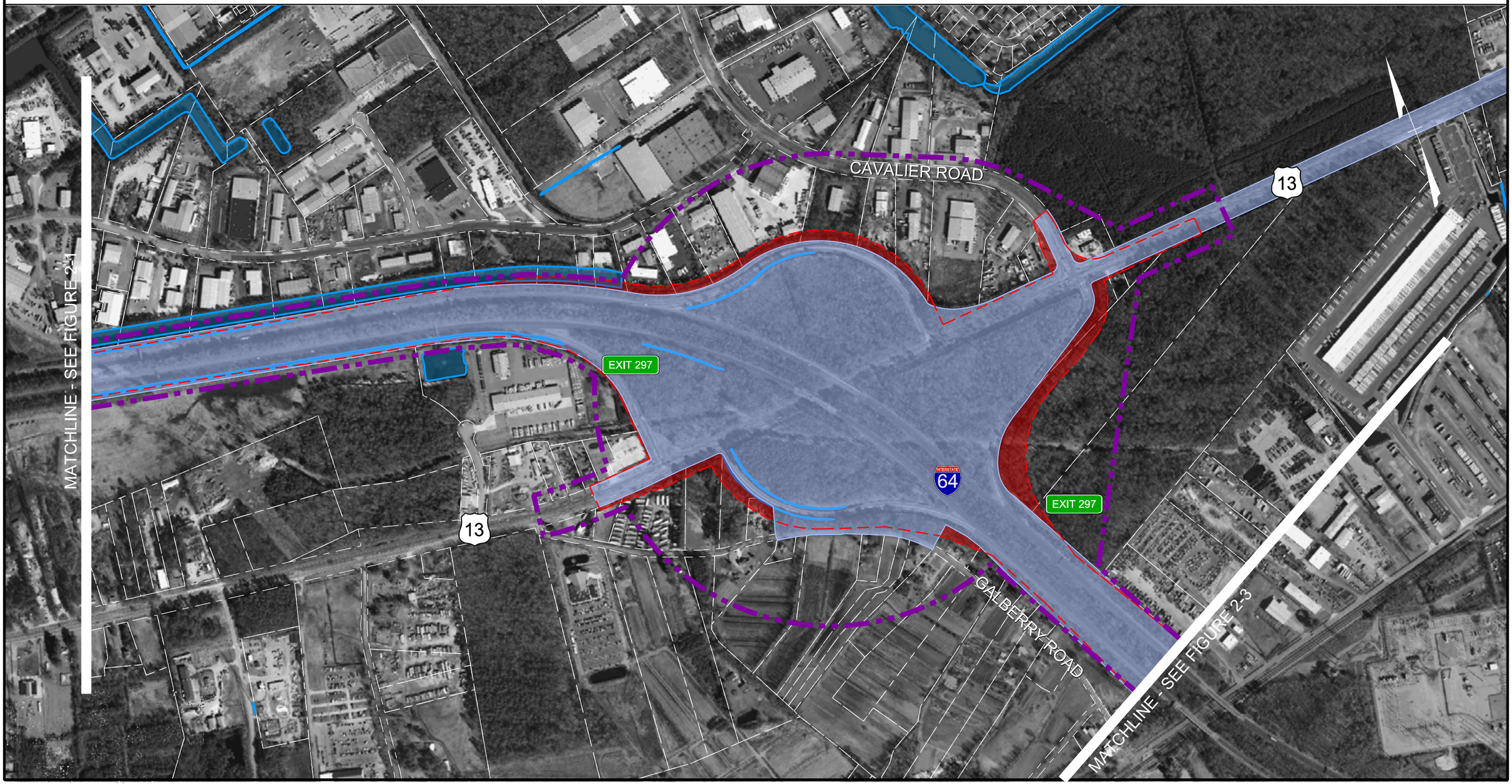

Area Of Impact
Study Area Bubble
Property Lines
Existing ROW
Area Of Impact Outside Existing ROW
Waterways
School
Wetland Mitigation Site

Mapping Source: VDOT and City of Chesapeake

Figure 2-3 Eight Lane Build Alternative

Interstate 64/ High Rise Bridge Corridor Study Environmental Assessment

City of Chesapeake

State Project Number: 0064-131-783, P101; UPC: 104366
Federal Project Number: NH-IM-064-3(481)

VDOT Virginia Department of Transportation

SCALE IN FEET
0 300' 600' 900' 1200'

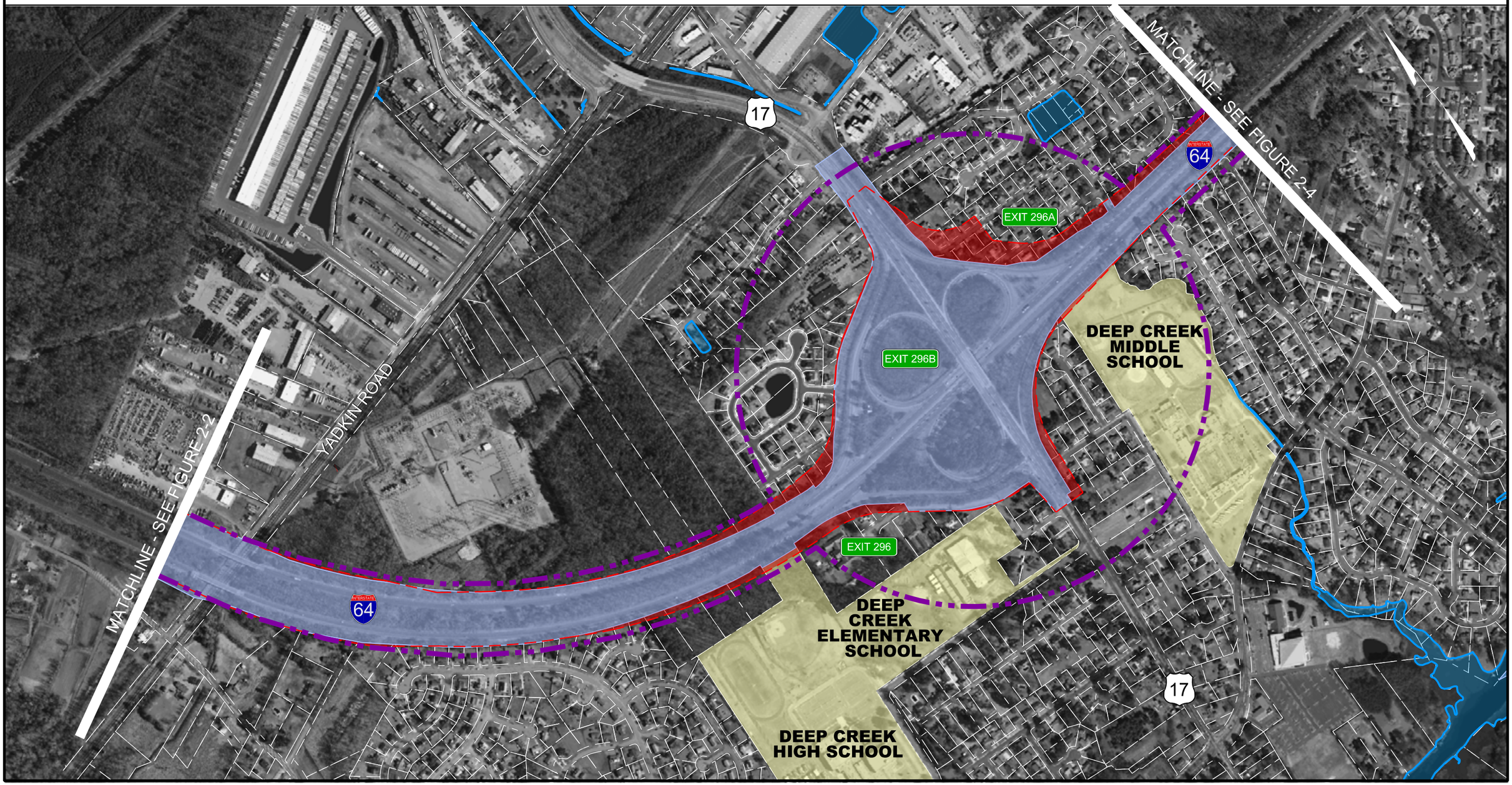

Area Of Impact
Study Area Bubble
Property Lines
Existing ROW
Area Of Impact Outside Existing ROW
Waterways
School
Wetland Mitigation Site

Mapping Source: VDOT and City of Chesapeake

Figure 2-4 Eight Lane Build Alternative

Interstate 64/ High Rise Bridge Corridor Study
Environmental Assessment

City of Chesapeake

State Project Number: 0064-131-783, P101; UPC: 104366
Federal Project Number: NH-IM-064-3(481)

VDOT Virginia Department of Transportation

SCALE IN FEET
0 300' 600' 900' 1200'

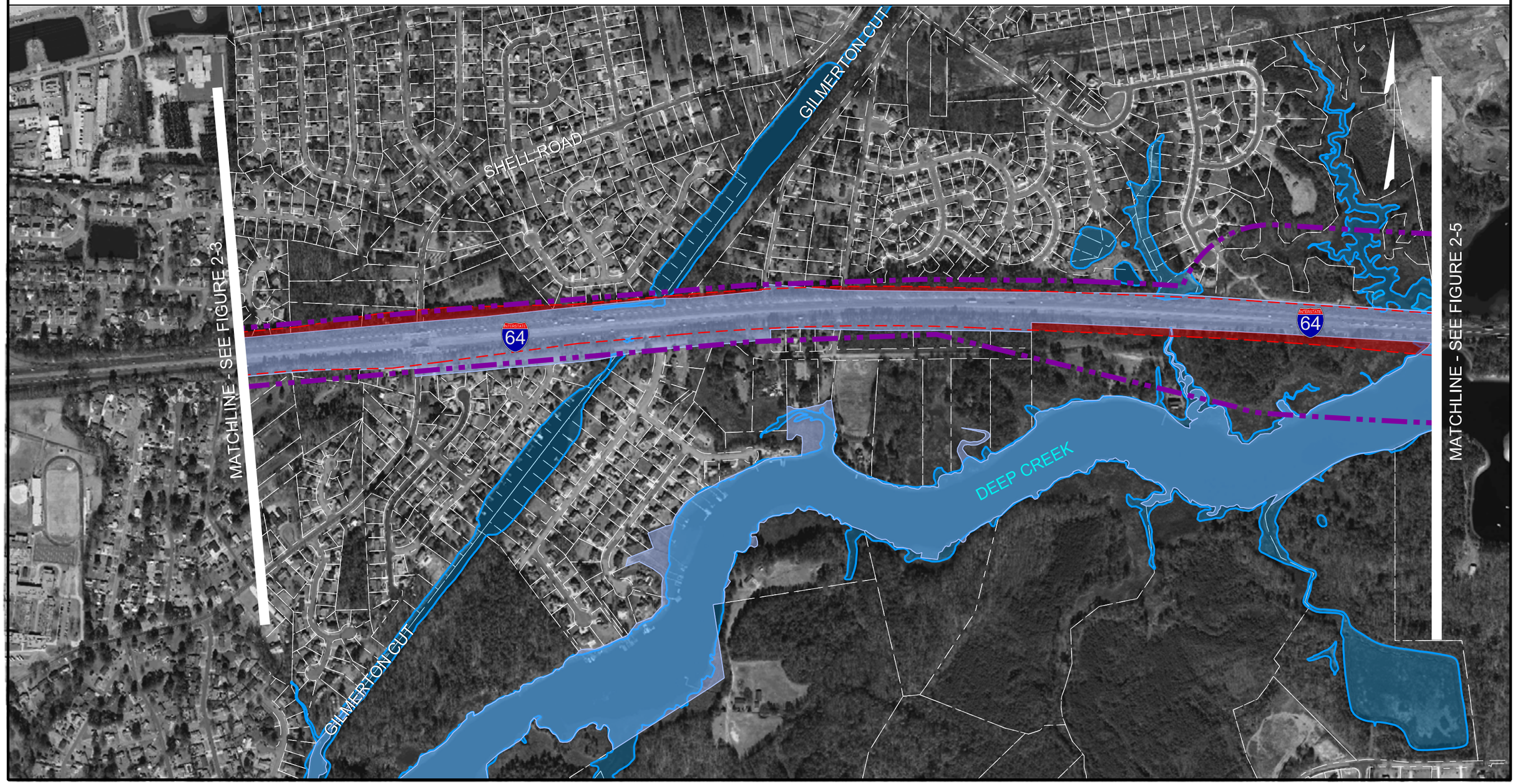

Area Of Impact
Study Area Bubble
Property Lines
Existing ROW
Area Of Impact Outside Existing ROW
Waterways
School
Wetland Mitigation Site

Mapping Source: VDOT and City of Chesapeake

Figure 2-5 Eight Lane Build Alternative

Interstate 64/ High Rise Bridge Corridor Study Environmental Assessment

City of Chesapeake

State Project Number: 0064-131-783, P101; UPC: 104366
Federal Project Number: NH-IM-064-3(481)

VDOT Virginia Department of Transportation

SCALE IN FEET
0 300' 600' 900' 1200'

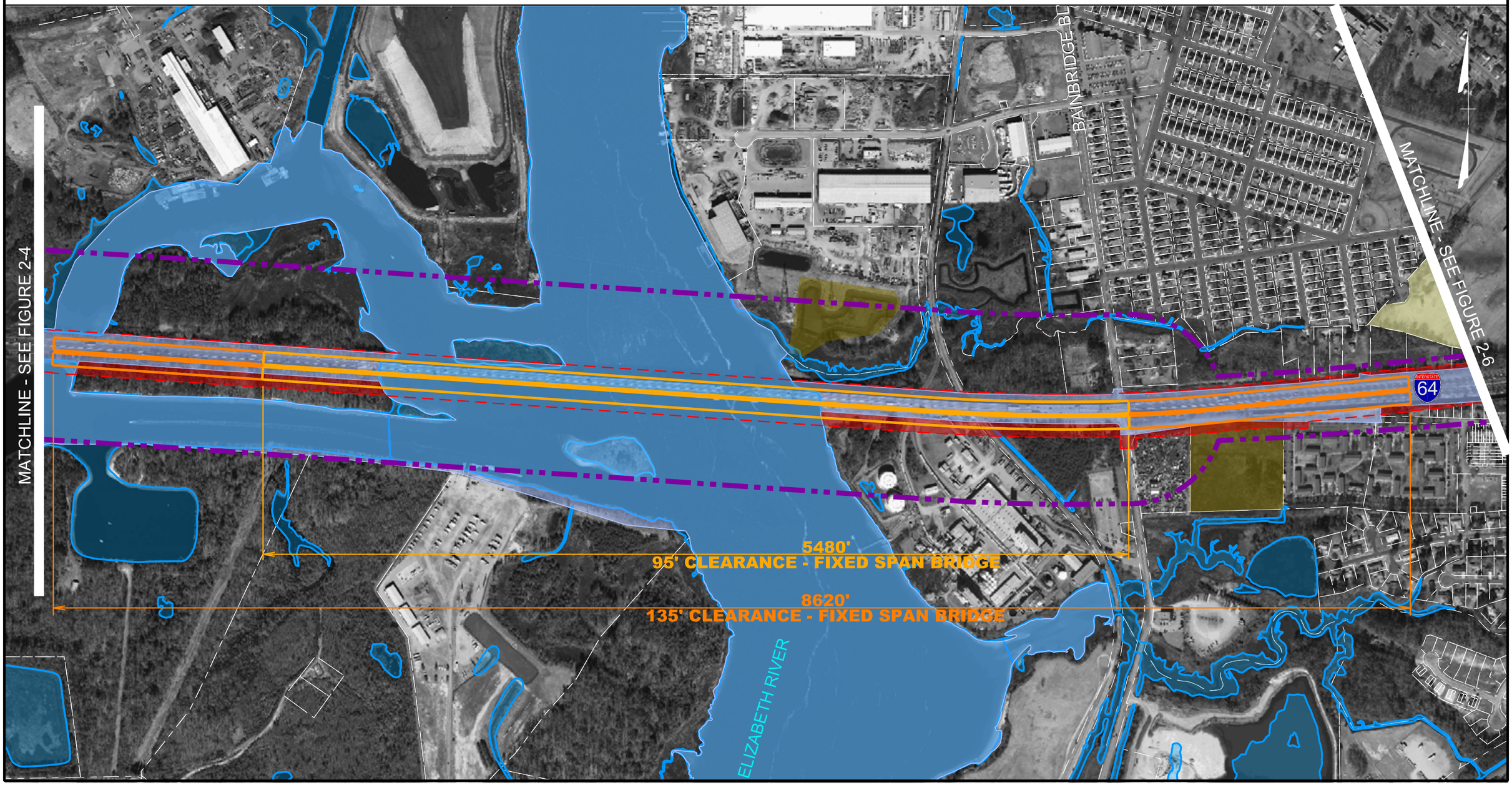

Area Of Impact
Study Area Bubble
Property Lines
Existing ROW
Area Of Impact Outside Existing ROW
Waterways
School
Wetland Mitigation Site

Mapping Source: VDOT and City of Chesapeake

Figure 2-6 Eight Lane Build Alternative

Interstate 64/ High Rise Bridge Corridor Study
Environmental Assessment

City of Chesapeake

State Project Number: 0064-131-783, P101; UPC: 104366
Federal Project Number: NH-IM-064-3(481)

VDOT Virginia Department of Transportation

SCALE IN FEET
0 300' 600' 900' 1200'

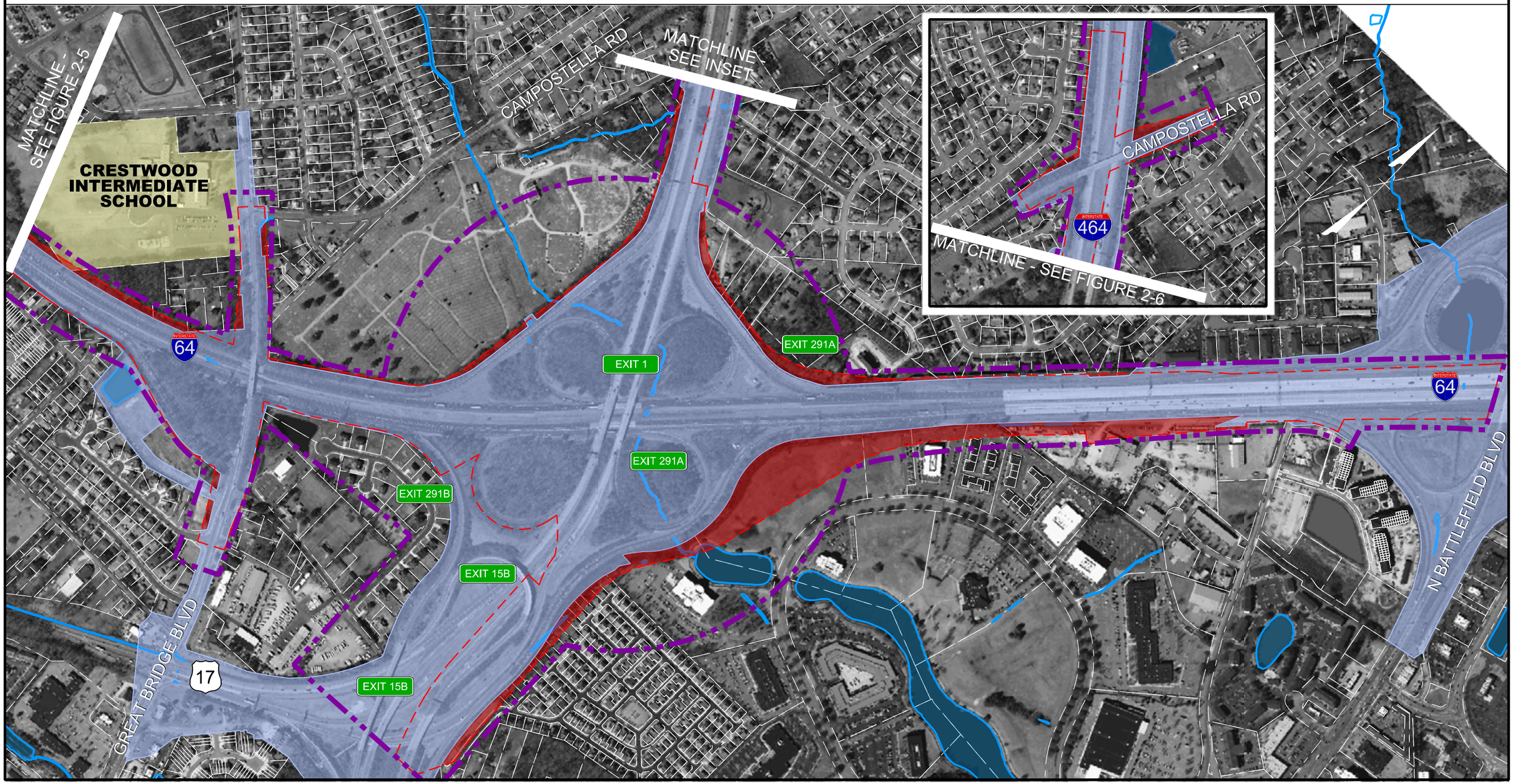

Existing Lanes

Proposed Lanes

Figure 2-7 Typical Section

Interstate 64/ High Rise Bridge Corridor Study
Environmental Assessment

City of Chesapeake

State Project Number: 0064-131-783, P101; UPC: 104366
Federal Project Number: NH-IM-064-3(481)

VDOT Virginia Department of Transportation

SCALE: NTS

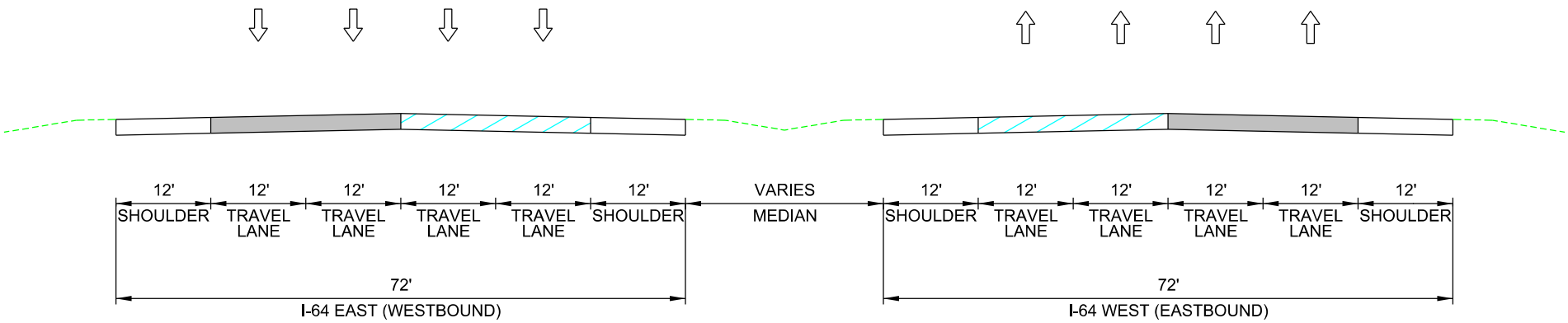

I-64 WEST OF US 17

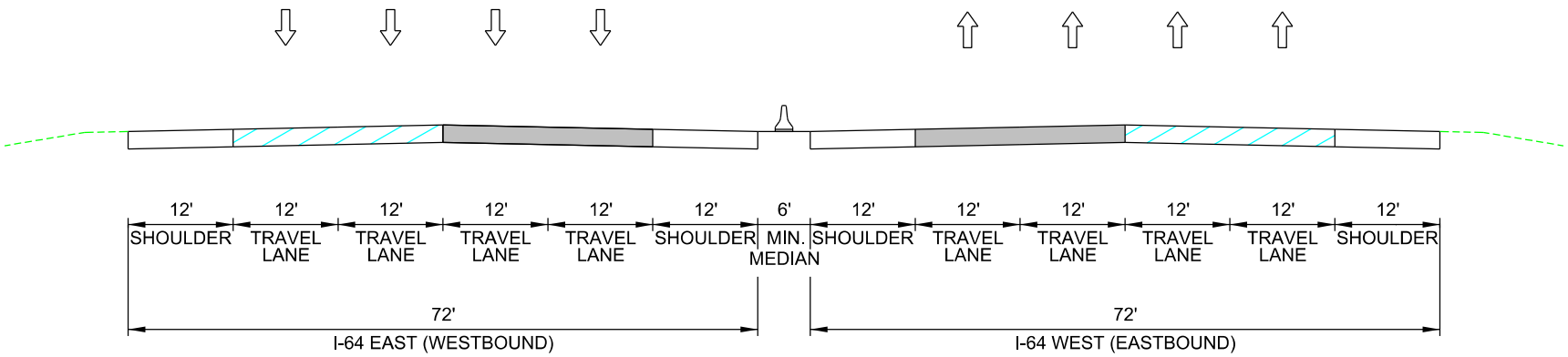

I-64 EAST OF US 17

Existing Lanes

Proposed Lanes

Figure 2-8 Typical Section

Interstate 64/ High Rise Bridge Corridor Study
Environmental Assessment

City of Chesapeake

State Project Number: 0064-131-783, P101; UPC: 104366
Federal Project Number: NH-IM-064-3(481)

VDOT Virginia Department of Transportation

SCALE: NTS

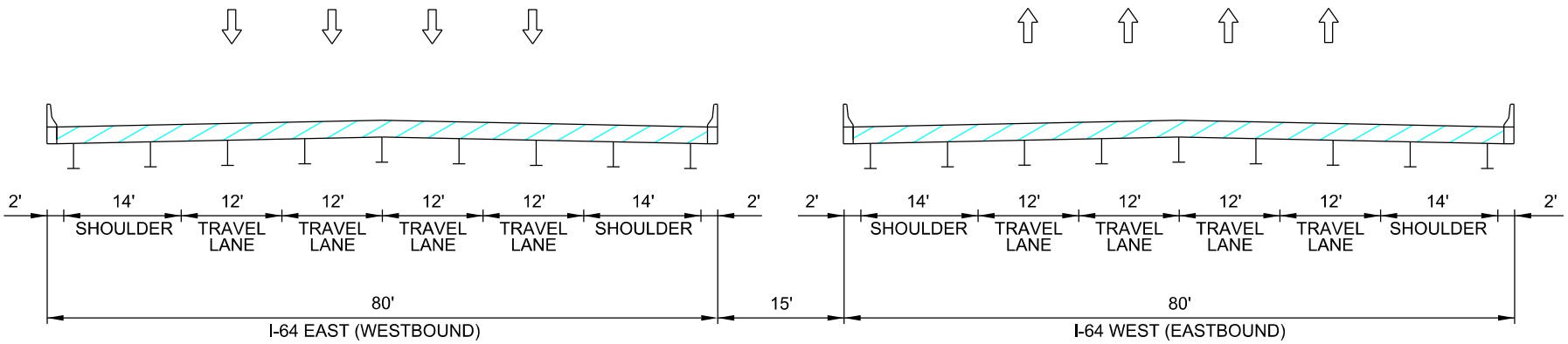

8 LANE PARALLEL BRIDGE ALTERNATIVE

Existing Lanes

Proposed Lanes

Figure 2-9 Typical Section

Interstate 64/ High Rise Bridge Corridor Study
Environmental Assessment

City of Chesapeake

State Project Number: 0064-131-783, P101; UPC: 104366
Federal Project Number: NH-IM-064-3(481)

VDOT Virginia Department of Transportation

SCALE: NTS

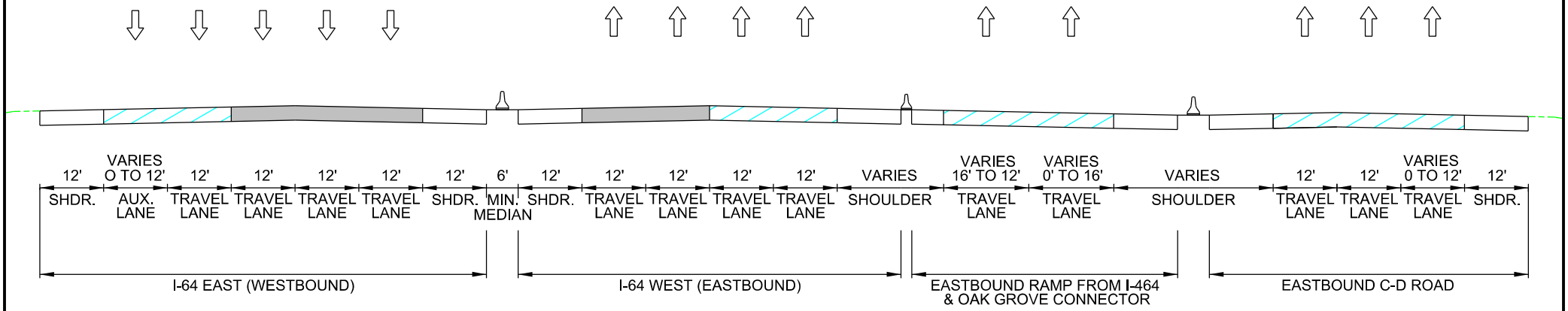

I-64 BETWEEN I-464 INTERCHANGE AND BATTLEFIELD BLVD

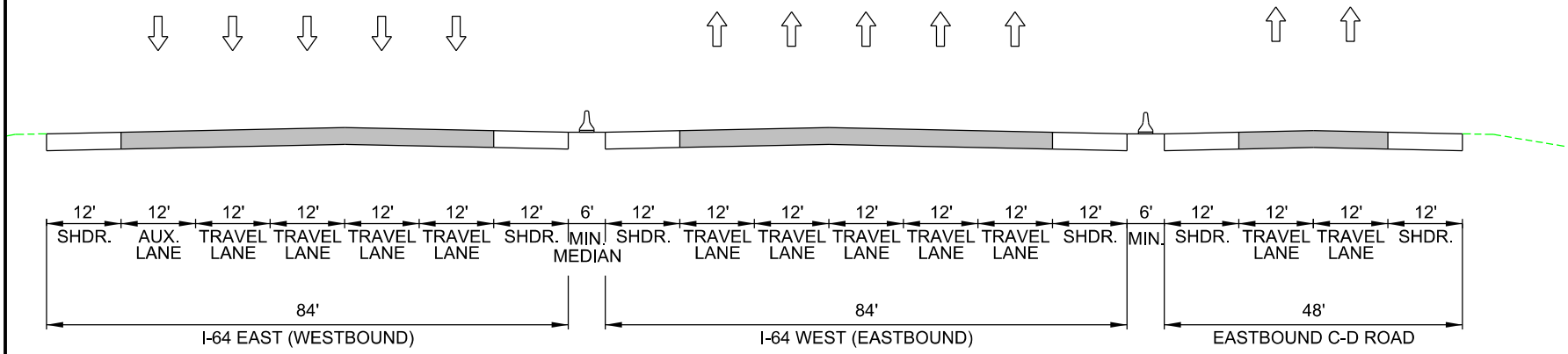

I-64 AT BATTLEFIELD BLVD

Existing Lanes

Proposed Lanes

Figure 2-10 Typical Section

Interstate 64/ High Rise Bridge Corridor Study
Environmental Assessment

City of Chesapeake

State Project Number: 0064-131-783, P101; UPC: 104366
Federal Project Number: NH-IM-064-3(481)

VDOT Virginia Department of Transportation

SCALE: NTS

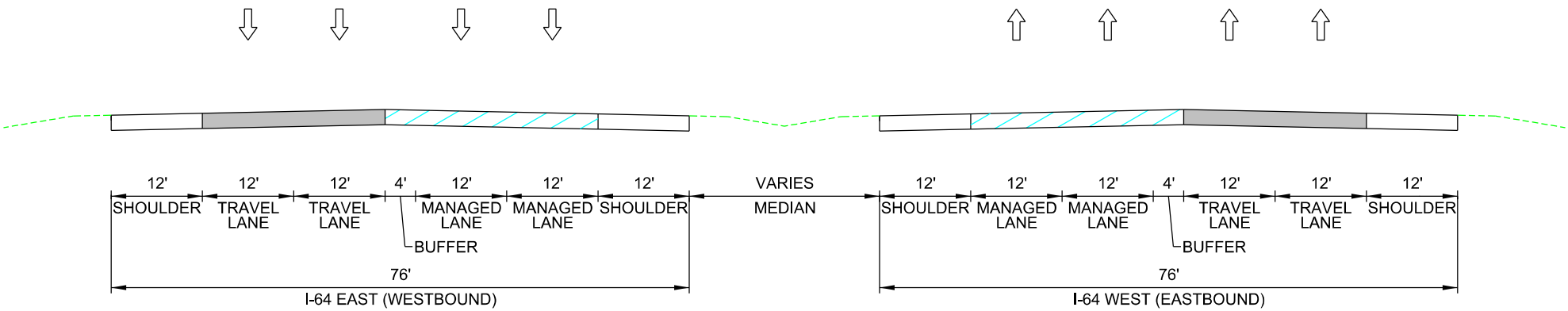

I-64 WEST OF US 17

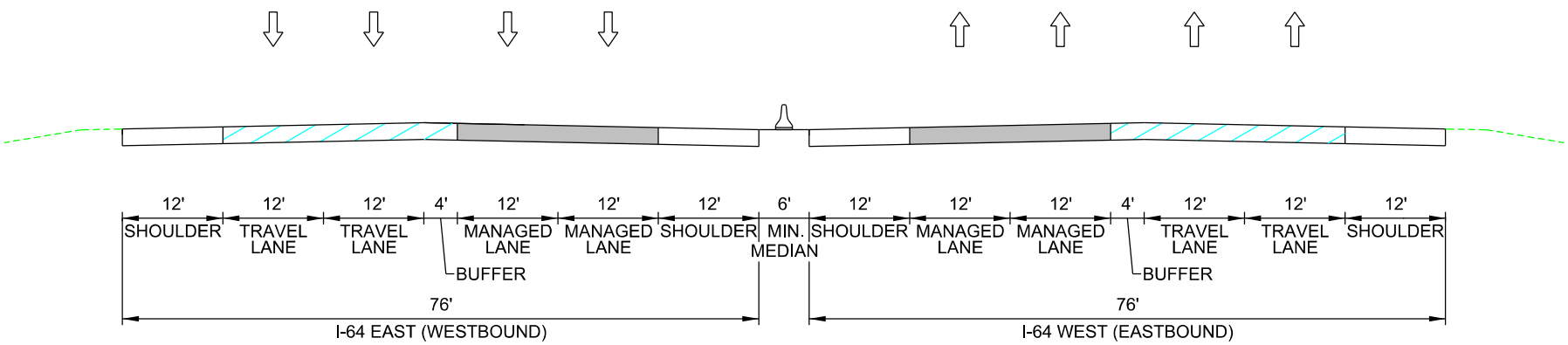

I-64 EAST OF US 17

NOTE:
TYPICAL SECTION DEPICTS THE EIGHT LANE BUILD - MANAGED ALTERNATIVE (HOT LANE SCENARIO)

Existing Lanes

Proposed Lanes

Figure 2-11 Typical Section

Interstate 64/ High Rise Bridge Corridor Study
Environmental Assessment

City of Chesapeake

State Project Number: 0064-131-783, P101; UPC: 104366
Federal Project Number: NH-IM-064-3(481)

VDOT Virginia Department of Transportation

SCALE: NTS

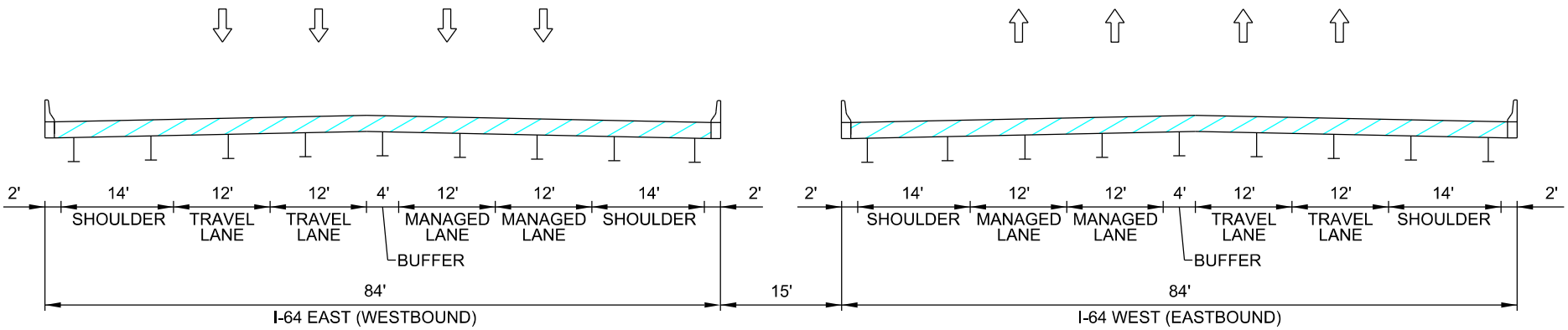

8 LANE PARALLEL BRIDGE ALTERNATIVE

NOTE:
TYPICAL SECTION DEPICTS THE EIGHT LANE BUILD - MANAGED ALTERNATIVE (HOT LANE SCENARIO)

Existing Lanes

Proposed Lanes

Figure 2-12 Typical Section

Interstate 64/ High Rise Bridge Corridor Study
Environmental Assessment

City of Chesapeake

State Project Number: 0064-131-783, P101; UPC: 104366
Federal Project Number: NH-IM-064-3(481)

VDOT Virginia Department of Transportation

SCALE: NTS

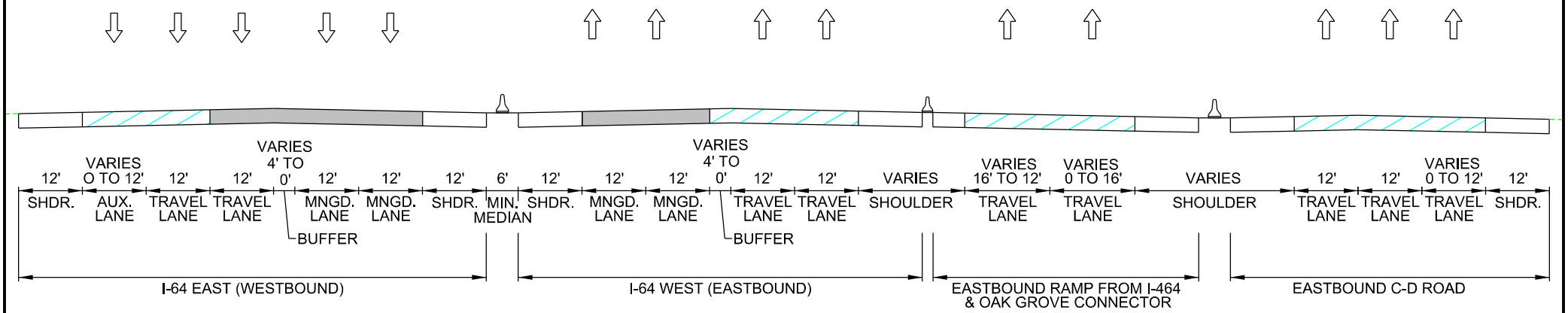

I-64 BETWEEN I-464 INTERCHANGE AND BATTLEFIELD BLVD

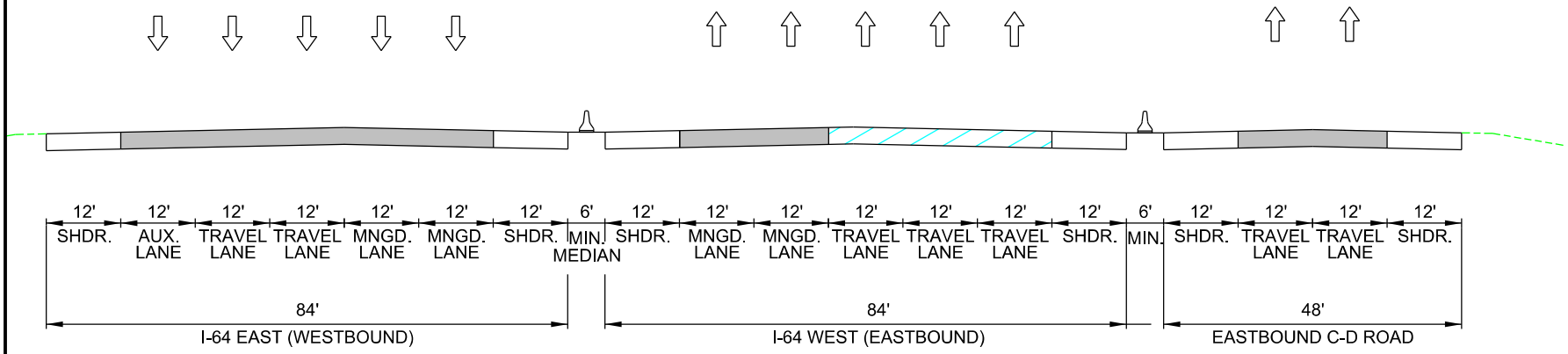

I-64 AT BATTLEFIELD BLVD

NOTE:
TYPICAL SECTION DEPICTS THE EIGHT LANE BUILD - MANAGED ALTERNATIVE (HOT LANE SCENARIO)

Chapter 3.0 ENVIRONMENTAL CONSEQUENCES

3.1 INTRODUCTION AND OVERVIEW OF ENVIRONMENTAL ISSUES

Transportation projects have the potential to affect social, economic, physical, and natural resources; therefore, it is essential that the existing environmental conditions and potential impacts are identified and understood. The purpose of the following section is to inventory and analyze the potential environmental effects associated with the No Build and CBAs considered in the Interstate 64/High Rise Bridge Corridor Study. **Table 3-1** identifies the environmental conditions within the study area. Where measurable impacts are not anticipated, the table refers the reader to the appropriate technical reports/memorandums as no further discussion is warranted for the purposes of this chapter. Where impacts are anticipated, the table refers the reader to the appropriate section of this chapter.

Table 3-1: Summary of Environmental Conditions

Environmental Resource	Resource Summary
Demographics	The interstate is located in a demographically diverse region of Chesapeake, see the ***Socioeconomics, Community Facilities, and Land Use Technical Report*** (VDOT, 2014m).
Displacements and Relocations	Property acquisition and displacement estimates were determined based on right-of-way requirements identified as part of the planning-level design in **Chapter 2.0** (see **Section 3.2**).
Community Facilities	Community facilities; including recreational parks, churches, and schools; have been identified within the study area. No impacts to community facilities are anticipated under either CBA, see the ***Socioeconomics, Community Facilities, and Land Use Technical Report*** (VDOT, 2014m).
Environmental Justice	The study area considered in this EA is located along an existing interstate facility. As such, neither CBA is expected to cause disproportionately high and adverse effects on minority or low-income populations because no low-income populations were identified within the study area and minority populations would experience the same level of impact under any of the Build Alternatives. These impacts would be related to the widening of the interstate and potential interchange improvements. These improvements are similar to those projected throughout the existing interstate corridor and would not result in disproportionate impacts to a minority population, see the ***Socioeconomics, Community Facilities, and Land Use Technical Report*** (VDOT, 2014m).
Land Use	Either CBA would be consistent with and unlikely to affect zoning classifications within and beyond the study area, see ***Socioeconomics, Community Facilities, and Land Use Technical Report*** (VDOT, 2014m).
Farmland and Soils	Farmland, as defined by the Farmland Protection Policy Act (FPPA) has not been identified within the study. Additionally, Agricultural and Forrestal Districts, protected under state law, have not been identified within the study area (see ***Appendix A: Correspondence*** for Natural Resources Conservation Service [NRCS] and Virginia Department of Agriculture and Consumer Services [VDACS] responses).
Section 6(f)	No Section 6(f) properties are located within the study area.
Section 4(f)	Section 4(f) properties have been identified within the study area, (see **Section 3.8**).

Environmental Resource	Resource Summary
Historic Properties	An archaeological and architectural reconnaissance survey was completed for the study to determine the presence of historic architectural resources in the area of potential effect (APE). No archaeological resources were found eligible for listing on the National Register of Historic Places (NRHP), and one architectural resource within the study area, Sunray Historic District, is currently listed on the NRHP. No historic resources are anticipated to be affected as result of either CBA. However, coordination with the Virginia Department of Transportation (DHR) will continue to confirm that historic resources will not be affected, see ***Appendix A: Correspondence*** for DHR responses and also ***Architectural Survey Report*** (VDOT, 2014d) ***and Archeological Survey Report*** (VDOT, 2014c).
Air Quality	A carbon monoxide (CO) hot-spot analysis was conducted at the worst-case interchanges and intersections in the study area, and the results show that peak CO concentrations are expected to remain well below the CO National Ambient Air Quality Standards (NAAQS) under all scenarios and analysis years evaluated. A quantitative Mobile Source Air Toxics (MSAT) analysis was performed that demonstrated that no long-term adverse impacts associated with either CBA are anticipated. There may be slightly higher MSAT emissions in the study area relative to the No-Build Alternative due to increased vehicle miles travelled (VMT), and there also could be increases in MSAT levels in a few localized areas where VMT increases. However, EPA's vehicle and fuel regulations will bring about significantly lower MSAT levels for the study area in the future than exist today. For additional information refer to the ***Air Quality Analysis Technical Report*** (VDOT, 2014a).
Noise	There are noise-sensitive receptors along both CBA corridors. Overall, residential and recreational impacts are predicted to occur under all alternatives (see **Section 3.3**)
Wetlands and Streams	There are no designated National Wild or Scenic Rivers in Virginia (NWSRS, 2013).Wetland and streams have been identified within the study area. Either CBA would impact these resources (see **Section 3.4**).
Water Quality	Several streams and rivers are listed as impaired by the Virginia Department of Environmental Quality (DEQ) in the vicinity of the study area. There is a measurable difference between the impacts to water quality under the No Build Alternative and impacts that could occur under either CBA (see **Section 3.4**).
Floodplains	Both 100-year floodplains and 500-year floodplains have been identified within the study area. Either CBA would impact these resources (see **Section 3.4.2**)
Wildlife and Habitat	Either CBA would impact habitat and include the displacement of wildlife. However, the study area is located in an urban/suburban environment along an existing interstate facility which has previously fragmented and impacted wildlife habitat (see **Section 3.5**).
Forest Resources	Forest resources have been identified within the study area. Permanent impacts associated with either CBA would consist of conversion of forested land to either pavement or maintained herbaceous and shrub land (see **Section 3.5**).
Threatened and Endangered Species	No federally-listed species and no documented state-listed plants or insects were identified in the study area vicinity. The state endangered canebrake rattlesnake and the state threatened Dismal Swamp southeastern shrew and peregrine falcon are listed within two miles of the study area. Also, the northern long-eared bat, proposed to be listed as a federal endangered species, may be located in the vicinity of the study area, but has not been documented in the study area. Impacts to the canebrake rattlesnake populations are not anticipated, as there is insufficient area within the study area to support viable populations and because highways serve to fragment populations. There are no known records of the Dismal Swamp southeastern shrew within the study area and preferred habitat of the shrew is not common in the study area. A peregrine falcon nest located on the High Rise Bridge would not be disturbed during the breeding season and new nest boxes would be installed on new bridges where practicable. For additional information, see the ***Natural Resources Technical Report*** (VDOT, 2014h).
Hazardous Materials	A search of federal and state agency databases did not identify any recognized environmental concerns (RECs) within the study area; see the ***Hazardous Materials Technical Memorandum*** (VDOT, 2014f).

The study area is a buffer around the road corridor that includes all natural, cultural, and physical resources that must be analyzed in the NEPA document (**Figure 1-1**). It does not imply right-of-way take or construction impacts. The study area extends beyond the interchanges described in **Chapter 2.0** to ensure the impacts of any of the proposed transportation improvements are adequately documented. The study area consists of:

- Four interchanges (estimated at 3,000 feet in diameter – estimated at 1,051 acres combined);
- Mainline along I-64 (100 feet on each side from existing edge of pavement – estimated at 327 acres); and,
- High Rise Bridge (600 feet from the center line for a total of 1,200 feet – estimated at 308 acres).

As discussed in the ***Alternatives Development Technical Report*** (VDOT, 2014b), potential or estimated environmental impacts of the alternatives retained for detailed study were estimated based on the CBA's area of impact (or footprint) within the substantially larger study area. The area of impact has been estimated for alternative comparison purposes and decision-making during the NEPA process, but would be further refined if and when an alternative advanced to design.

Due to the number of possible managed lane scenarios, there have been no specific operational scenarios identified at this stage of the study. Accordingly, the following three operational scenarios were developed to establish a sample range of travel demand conditions for CBA 2: HOV, HOT, and All Tolled. For the purpose of this study, potential impacts associated with CBA 2 assume the same footprint as CBA 1. However it should be noted, of the three scenarios developed for this study, the HOV, and All Tolled lane scenarios would fit within the footprint of CBA 1 and CBA 2. If a specific managed lane scenario is identified as the Preferred Alternative, impact estimates could be updated in the Revised EA and associated technical reports. **Table 3-2** summarizes the estimated environmental impacts for the No Build and CBAs.

Table 3-2: Summary of Potential Environmental Impacts by Build Alternative

Category	No Build	CBA 1		CBA 2	
		95 ft.	135 ft.	95 ft.	135 ft.
Total Area of Alternative (acres)	0	599.64	600.12	599.64	600.12
Vacant Land tax parcels (no.)	0	52	48	52	48
Residential tax parcels (no.)	0	132	132	132	132
Business tax parcels (no.)	0	49	47	49	47
Noise Receptors (no.)	390	783	815	783	815
Tidal Streams (acres)	0	2.14	1.88	2.14	1.88
Non Tidal Streams (linear feet)	0	5,098.00	5,098.00	5,098.00	5,098.00
Wetlands (acres)	0	22.37	20.80	22.37	20.80
100-Year Floodplain (acres)	0	30.10	25.98	30.10	25.98
500-Year Floodplain (acres)	0	3.79	3.75	3.79	3.75
Forest and Vegetation (acres)	0	272.52	268.75	272.52	268.75
Section 4(f) Properties (acres)	0	0.12	0.12	0.12	0.12

3.2 SOCIOECONOMIC RESOURCES

3.2.1 Existing Conditions

Displacement and Relocations

The study area contains a total of 724 parcels of land. Of these, approximately 462 parcels are designated as Residential Improved, 93 parcels are designated as Commercial Improved, 57 parcels are designated as Residential Land, 54 parcels are designated as Commercial Land, 51 parcels are designated as Detached Condos, six (6) parcels are designated as Commercial Condos, and one parcel is designated as an Attached Condo property. A total of 233 parcels lie within or adjoin the CBA's 95-foot bridge option right-of-way and 227 parcels lie within or adjoin the CBA's 135-foot bridge option right-of-way.

3.2.2 Environmental Consequences

Displacement and Relocations

Displacements were determined based on analysis as described in the ***Alternatives Development Technical Report*** (VDOT, 2014b) and ***Socioeconomics, Community Facilities, and Land Use Technical Report*** (VDOT, 2014m). Anticipated right-of-way required from each parcel was estimated for each CBA. Under the No Build Alternative, there would be no displacements or relocations as a result of interstate improvements within the study area. Estimated potential property acquisitions and displacements associated with the right-of-way requirements for each CBA and bridge option are listed in **Table 3-3**. A detailed list of estimated property acquisitions and displacements is included in the ***Socioeconomics, Community Facilities, and Land Use Technical Report, Appendix A: Right-of-Way Acquisition and Displacement Summary*** (VDOT, 2014m). These impacts are conservative and anticipated to change if and when an alternative advances to design.

If project design advances, and right-of-way impacts are better understood, VDOT will develop a detailed relocation plan for all displaced residents, businesses, and non-profit organizations. The acquisition of property and any necessary relocations will be conducted in accordance with all applicable federal laws, regulations and requirements, including but not limited to 20 CFR §710, the Uniform Relocation Assistance and Real Property Acquisition Policies Act of 1970 (49 CFR §49, as amended). All persons displaced on federally-assisted projects will be treated fairly, consistently, and equitably so that they do not experience disproportionate effects as a result of projects that are designed for the benefit of the public as a whole. VDOT will provide relocation resources to all residences, businesses, and non-profit organizations potentially impacted by the proposed improvement without discrimination in accordance with current VDOT Right-of-Way Manual procedures (VDOT, 2011). Effects to properties would be avoided and minimized to the greatest extent possible.

Table 3-3: Potential Property Impacts and Displacements

Alternative/Option		Partial Acquisition	Full Acquisition	Displacements
CBA 1	95 ft.	163	70	69
	135 ft.	157	70	69
CBA 2	95 ft.	163	70	69
	135 ft.	157	70	69

3.3 NOISE

The ***Noise Analysis Technical Report*** (VDOT, 2014j,) provides more details on traffic noise, noise impact analyses, modeling methodologies, predicted sound levels, and potential noise abatement considerations. Predicted noise impacts were evaluated in accordance with FHWA's Procedures for Abatement of Highway Traffic Noise and Construction Noise (23 CFR 772) and VDOT's Highway Traffic Noise Impact Analysis Guidance Manual (revised July 14, 2014).

All traffic noise computations for this study were conducted using the latest version of the FHWA Traffic Noise Model (FHWA TNM 2.5). The FHWA TNM incorporates state-of-the-art sound emissions and sound propagation algorithms, based on well-established theory or on accepted international standards.

For purposes of this analysis, areas along the study corridors were divided into 21 Common Noise Environments (CNE). CNEs are groupings of receptor sites that, by location, form distinct communities within or adjacent to the project area and contain receptors with similar exposures to noise. These areas are used to evaluate traffic noise impacts and potential noise abatement options for communities as a whole, and to assess the feasibility and reasonableness of possible noise abatement measures for those areas, see ***Noise Analysis Technical Report*** (VDOT, 2014j).

3.3.1 Existing Conditions

As discussed in the ***Noise Analysis Technical Report*** (VDOT, 2014j), to determine the degree of impact noise will have on human activity, the FHWA established Noise Abatement Criteria (NAC) for different categories of land use. If sound levels are predicted to approach or exceed the absolute FHWA/VDOT NAC for the design year build scenario during the loudest hour of the day at any receptor, then an impact is predicted to occur and a noise abatement evaluation is warranted. The NAC are measured in decibels and denoted as dBA. Noise impacts are predicted under the design year (2040) build condition wherever noise levels are predicted to approach within one decibel or exceed 67 dBA, at exterior noise-sensitive land uses in Activity Categories B (residential) and C (recreational) during the loudest hour of the day. For Category D (noise-sensitive institutional), land uses such as schools and church buildings, noise impacts are predicted where interior noise levels due to the future design year build condition approach within one decibel or exceed 52 dBA during the loudest hour of the day. For Category E (commercial) exterior land uses, noise impacts are predicted to occur when noise levels approach or exceed 72 dBA.

Existing noise conditions in the study corridor are presented alongside the future conditions in the following section.

3.3.2 Environmental Consequences

In addition, noise impacts would occur wherever project-related noise levels cause a substantial increase over existing noise levels for all noise-sensitive exterior activity categories. VDOT considers an increase of 10 dBA or more to be "substantial". Loudest-hour noise levels were predicted for the Existing 2013 scenario, as a measure of comparison, and for the following alternatives in the 2040 Design Year: the No Build Alternative, CBA 1 and CBA 2, see ***Noise Analysis Technical Report*** (VDOT, 2014j). **Table 3-4** presents a summary of the predicted noise impacts for the 2013 Existing and 2040 No Build and CBAs. Noise impacts are predicted to occur where the NAC are approached or exceeded or substantial increases over existing noise levels occur, and are summarized for the entire study area, separated by NAC activity categories.

Table 3-4: Existing & Projected Noise Impacts

Alternative	Land Use and NAC Activity Category				
	Residential Exterior (B)	Recreational Exterior (C)	Institutional Interior (D)	Commercial Exterior (E)	Total
Existing	326	46	0	0	372
No Build Alternative	390	55	0	0	445
CBA 1, 95 ft.	787	76	2	3	868
CBA 1, 135 ft.	817	78	2	3	900
CBA 2, 95 ft.	787	76	2	3	868
CBA 2, 135 ft.	817	78	2	3	900

Overall, residential and recreational impacts are predicted to occur under all alternatives. Due to the increased traffic in the future Design Year (2040), noise impacts from the No Build Alternative are greater, at a total of 445, than those under the Existing Condition, which total 372. A total of 868 impacted receptors are predicted for CBA 1 and 2 with the 95-ft high bridge, comprised of 787 residential dwelling units (Category B), 76 recreational receptors (Category C), 2 institutional receptors (interior, Category D) and 3 commercial receptors (exterior, Category E). For CBA 1 and 2 with the 135 ft high bridge, a total of 900 receptors are predicted to be impacted, including 815 residential (Category B), 82 recreational receptors (Category C), 2 institutional receptors (interior, Category D), and 3 commercial receptors (Category E). **Table 3-5** presents the number of impacted recreational receptor units within each Category C land use property within the study area.

Table 3-5: Category C Recreational Noise Impacts

Land Use Description	Recreational Receptors Impacted by Noise			
	Existing	No Build	CBA 1 95 ft./135 ft.	CBA 2 95 ft./135 ft.
Deep Creek Middle School - Baseball	1	2	6/6	6/6
Deep Creek High School - Baseball	0	0	4/4	4/4
Crestwood Intermediate School	3	4	14/14	14/14
Roosevelt Memorial Park	34	39	31/31	31/31
Grace Baptist Temple Playground	1	1	1/1	1/1
Tidewater Baptist Church Soccer Field	6	7	7/7	7/7
Dominion Village Senior Living Back Porch	0	1	1/1	1/1
Dominion Village Senior Living Front Porch	1	1	1/1	1/1
Deep Creek Middle School - Track	0	0	2/2	2/2
Deep Creek High School - Track	0	0	5/5	5/5
St. Benedict's Church - Outdoor Worship/Play	0	0	2/2	2/2
Guru Nanak Foundation Play Area	0	0	1/1	1/1
Harbor North Park	0	0	1/3	1/3
Totals	46	55	76/78	76/78

3.3.3 Noise Abatement

As discussed in the ***Noise Analysis Technical Report*** (VDOT, 2014j), FHWA has identified certain noise abatement measures that may be incorporated into projects to reduce traffic noise impact. In general, mitigation measures can include alternative measures (traffic management, the alteration of horizontal and vertical alignment), in addition to the construction of noise barriers.

Traffic management measures typically considered for noise abatement include reduced speeds and truck restrictions. Reduced speeds would not be an effective noise mitigation measure since a substantial decrease in speed is necessary to provide a significant noise reduction. A 10 mph reduction in speed would result in only a two decibel decrease in noise level. Restricting truck usage for either of the proposed CBAs is not practical as truck traffic is a primary function of this roadway, and diversion of truck traffic to other roadways would increase noise levels in those areas. The alteration of the horizontal or vertical alignment for the sole purpose of noise abatement would not be practical for either CBA because the existing roadway alignments would have to be shifted substantially to make the measure effective. Furthermore, any shifts to the alignment studied herein would require right-of-way acquisitions and would likely create new noise impacts. Furthermore, VDOT is not authorized by FHWA to use "quiet pavement" at this time as a form of noise mitigation. Acoustic insulation was not considered because interior impacts would be mitigated by a replacement barrier. Berms were not considered because they would greatly increase the cost and the footprint of the project by substantially increasing the amount of right of way required.

The feasibility and reasonability of noise barriers as an abatement measure were evaluated in locations where noise impact is predicted to occur under the Build conditions. To be considered "feasible", a noise barrier must be:

- Effective, reducing noise levels at impacted noise sensitive locations by at least 5 decibels, thereby "benefiting" at least 50% of the impacted receptors in the area; and,
- Constructible, accounting for safety, barrier height, topography, drainage, utilities, maintenance of the barrier, and access to adjacent properties.

In order to be considered "reasonable", a noise barrier must be:

- Cost-effective, requiring less than 1600 square feet per benefited receptor;
- Able to meet VDOT's noise reduction design goal of 7 decibels for at least one of the impacted receptors; and,
- Agreeable to the majority of benefited receptors. Community views are surveyed in the final design phase of the project.

VDOT policy requires that when an existing noise barrier is physically impacted and/or relocated as part of a highway widening or major reconstruction project, the same level of protection must be provided, without consideration of cost-reasonableness. Furthermore, if additional noise impacts are projected with the project, additional noise barrier height or length would be subject to VDOT's cost-reasonableness criteria. Barriers that are constructed to replace existing barriers that are removed as a result of the project are called "replacement" barriers.

Noise barrier analyses conducted for CBAs 1 and 2 found approximately 11 to 12 miles of warranted barrier length that would be potentially feasible and reasonable. The barrier height, length and predicted number of benefits are similar for both bridge height options. The feasible and reasonable barriers would benefit a total of 500 to 700 impacted receptors, 1100 to 1400 receptors in total, with an estimated total cost of $32 million to $35 million. Of these feasible and reasonable barriers, approximately 6500 feet would be replacement barriers required in areas where existing barriers would be removed. Details on the individual barriers evaluated, including those found to be not feasible and not reasonable are discussed further in the ***Noise Analysis Technical Report*** (VDOT, 2014j).

This noise evaluation is preliminary; a more detailed review will be completed during the final design stage. As such, noise barriers that are found to be feasible and reasonable during the preliminary noise analysis may not be found to be feasible and reasonable during the final design noise analysis. Similarly, noise barriers that were not considered feasible and reasonable may be found to meet established criteria and be recommended for construction. If a noise barrier is determined to be feasible and reasonable in final design, the affected public will be given an opportunity to decide whether they are in favor of construction of the noise barrier. Additional details on the noise analysis can be found in the ***Noise Analysis Technical Report*** (VDOT, 2014j).

3.3.4 Construction Noise Consideration

Construction activity may cause intermittent short-term fluctuations in noise levels in the vicinity of the project area. During the construction phase of the project, all reasonable measures will be taken to minimize noise impact from these activities. Additionally, Section 107.16(b) 3 of VDOT's Road and Bridge Specifications prescribes contractor requirements for noise control during construction. These include, but are not limited to:

- Limiting exterior noise levels during noise-sensitive activities to no more than 80 decibels, and taking corrective action should construction activities surpass this level;
- Restricting certain portions of work that produce objectionable noise between 10 P.M. and 6 A.M. and following any additional noise restrictions established by local ordinances; and
- Establishing alternative haul routes that direct vehicles away from developed areas and ensure that noise from hauling operations is kept to a minimum.

3.4 AQUATIC RESOURCES

3.4.1 Existing Conditions

Aquatic resources comprising all Waters of the United States (WOUS), including wetlands and floodplains are discussed in this section. Surface waters in the study area flow into either the Western Branch of the Elizabeth River or the Southern Branch of the Elizabeth River, discharge into the James River, and ultimately into the Chesapeake Bay. There are no designated National Wild or Scenic Rivers in Virginia (NWSRS, 2013).

Streams

The Southern Branch of the Elizabeth River, the Gilmerton Deep Creek Canal, and several streams and unnamed tributaries intersect the study area. The Western Branch of the Elizabeth River is located outside of the study area but is fed by some of these tributaries. The streams that were field verified to intersect the study area include Hodges Creek, Newton Creek, and unnamed tributaries of Goose Creek and Deep Creek. The location of each water body is illustrated in **Figure 3-1**. The lengths of the stream segments within the study area are listed in **Table 3-6**. Refer to the Unified Stream Methodology (USM) forms that describe each of the field-verified non-tidal streams in ***Appendix C*** of the ***Natural Resources Technical Report*** (VDOT, 2014h) for additional details.

Table 3-6: Streams Identified within the Study Area

Stream	Stream Lengths Within Study Area (linear feet)
Deep Creek south of the High Rise Bridge and parallel to I-64	3,700
Deep Creek north of the High Rise Bridge	1,600
Verified tidal unnamed Tributary of Deep Creek north of the High Rise Bridge	950
Hodges Creek, tidal and non-tidal, north of the High Rise Bridge	3,200
Verified non-tidal unnamed tributary of Goose Creek	6,061
Verified non-tidal unnamed tributary of Deep Creek	1,527
Verified non-tidal unnamed tributary of Newton Creek	5,363

Wetlands

Within the study area, a total of 78 wetlands were field-identified covering approximately 91 acres (see). Approximately 49 acres of the wetlands have been identified as non-tidal. Of these wetlands, approximately five acres are classified as emergent (PEM) wetlands and 44 acres are considered forested (PFO) wetlands. The remaining 43 acres of wetlands are estuarine intertidal emergent (E2EM). Included in the intertidal emergent wetlands are approximately 1.23 acres of the 7.5-acre Chesapeake Land Development Tidal Bank, which is located east of the High Rise Bridge. The large acreage of tidal wetlands reflects the 1,200 foot wide study corridor across the Southern Branch of the Elizabeth River

and Deep Creek. Refer to the Wetland data sheets that describe each of the field-verified non-tidal and tidal wetlands in ***Appendix B*** of the ***Natural Resources Technical Report*** (VDOT, 2014h) for additional details.

Water Quality

In DEQ's *Final 2012 305(b)/303(d) Water Quality Assessment Integrated Report*, several streams and river segments in the vicinity of the study area are listed as impaired (DEQ, 2012). Goose Creek, Deep Creek, Hodges Creek, Mains Creek, and the Southern Branch of the Elizabeth River were listed as impaired for Aquatic Life Use because of failure to meet the dissolved oxygen criteria and for Fish Consumption Use. In addition, the Virginia Department of Health (VDH) has issued a fish consumption advisory for polychlorinated biphenyls (PCBs) for these surface waters and for dioxins in the Southern Branch of the Elizabeth River and its tidal tributaries (DEQ, 2014).

Floodplains

Based on the Federal Emergency Management Agency (FEMA) flood insurance rate map (FIRM), 100-year floodplains have been identified within the study area (FEMA, 1999), see **Figure 3-3**. Approximately 290 acres of 100-year floodplains and another 20 acres of 500-year floodplains are located within the study area. These floodplains are primarily located in the eastern portion of the study area, along the Elizabeth River, Deep Creek, and the Gilmerton Deep Creek Canal. The width of the floodplain extends continuously from the Gilmerton Deep Creek Canal east to Great Bridge Boulevard (Route 190), a distance of approximately three miles. The 100-year and 500-year floodplains also are associated with Newton Creek to the northeast of the I-64/I-464 interchange. The floodplain along a tributary to Newton Creek extends into the study area approximately 850 feet and is approximately 250 feet in width. There also are floodplains associated with Goose Creek in the western portion of the study area. The 100-year floodplain associated with a tributary of Goose Creek is located to the southwest of the I-64/I-664 (Bowers Hill) interchange and is approximately 2,100 feet long and approximately 900 feet in width within the study area.

3.4.2 Environmental Consequences

Streams

Under the No Build Alternative, there would be no new stream impacts as a result of interstate improvements within the study area. Most of the tidal streams located within the study area are in the vicinity of the High Rise Bridge, as shown on **Figure 3-1** and **Table 3-7**. As a result, most of the tidal stream impacts would occur as a result of the construction of either CBA. Both CBAs would span approximately 2,800 feet across the width of the Southern Branch of the Elizabeth River and Deep Creek, similar to the length of the existing High Rise Bridge. As discussed in the ***Natural Resources Technical Report*** (VDOT, 2014h), permanent stream impacts would result from construction of new bridge piers and abutments for the bridge structure. Tidal streams also would be affected by estimated permanent roadway impacts west of the bridge, including the Gilmerton Deep Creek Canal and the western portion of Deep Creek. The western portion of Deep Creek west of the bridge would be impacted by fill required for the roadway. It is anticipated that neither CBA would impact Hodges Creek. Estimated stream impacts from each of the alternatives are included in **Table 3-7.**

Table 3-7: Estimated Stream Impacts by Alternative

Alternative	No Build	CBA 1		CBA 2	
		95 ft.	135 ft.	95 ft.	135 ft.
Estimated Tidal River & Deep Creek Pier Impacts (acres)	0.00	1.25	1.26	1.25	1.26
Additional Estimated Tidal Streams Roadway Impacts (acres)	0.00	0.87	0.87	0.87	0.87
Total Estimated Pier and Roadway Tidal Stream Impacts (acres)	0.00	2.05	2.05	2.05	2.05
Total Estimated Non-Tidal Stream Impacts (linear feet)	0.00	5,098	5,098	5,098	5,098

As indicated in **Table 3-7,** the CBA with the 95-foot bridge option is estimated to have more tidal stream/river impacts (2.14 acres) than the CBA with the 135-foot bridge option (1.88 acres) because more of the bridge would be constructed atop piers.

Approximately 5,098 linear feet of the non-tidal streams within the study area are located in interchange areas and are therefore assumed to be impacted (see **Figure 3-1**). For the purposes of this study, a worst case scenario is presented and all streams are assumed to be channelized and/or placed in culverts. If and when the project advances into design, additional avoidance and minimization measures may be possible.

Wetlands

Under the No Build Alternative, there would be no wetland impacts as a result of interstate improvements within the study area. Either CBA would have impacts to both tidal and non-tidal wetlands. Wetlands would be impacted by roadway widening, bridge piers and abutments, interchange modifications, and stormwater management facilities (SWM). Impacts to wetlands have been avoided to the greatest extent possible through the alternatives screening process. If and when the project advances into design, additional avoidance and minimization measures may be possible, see the ***Alternatives Development Technical Report*** (VDOT, 2014b). **Table 3-8** lists the wetland impacts that would be expected from each of the CBA.

Table 3-8: Estimated Wetland Impacts by Alternative

Alternative		No Build	CBA 1		CBA 2	
			95 ft.	135 ft.	95 ft.	135 ft.
Non-Tidal	PFO Wetland Impacts (acres)	0.00	18.34	18.34	18.34	18.34
	PEM Wetland Impacts (acres)	0.00	1.00	1.00	1.00	1.00
	Total Non-Tidal Impacts (acres)	0.00	19.34	19.34	19.34	19.34
Tidal	(E2EM) Wetland Fills Impacts (acres)	0.00	3.02	1.39	3.02	1.39
	E2EM Wetland Piers Impacts (acres)	0.00	0.00	0.07	0.0	0.07
	E2EM Wetland Mitigation Bank Impacts (acres)	0.00	0.20	0.20	0.20	0.20
	Total Tidal Impacts (acres)	0.00	3.02	1.46	3.02	1.46
Total Wetland Impacts (acres)		0.00	22.37	20.80	22.37	20.80

Most of the estimated non-tidal wetland impacts would be to two large PFO wetlands located at the Route 13 interchange. Estimated impacts to PEM wetlands within the Bowers Hill interchange result in approximately one acre for each CBA. The estimated impacts to tidal wetlands resulting from bridge piers have been calculated based upon the assumptions described in the ***Natural Resources Technical Report*** (VDOT, 2014h). The impacts to tidal wetlands beneath the bridges would result from the area of the piers. The permanent impacts east and west of the bridges result from impacts of placing fill beneath the roadway. Additional tidal wetland impacts would result to the Chesapeake Land Development Tidal Bank property from each CBA due to a relocation of the existing Libertyville Road to the south. Most of the estimated tidal wetland impacts would result from impacts due to fill. As a result, the CBA with the 95-foot bridge option impacts more tidal wetlands then the CBA with the 135 foot bridge option because they have fewer piers and more roadway atop fill within the wetland areas.

Wetland and Stream Permitting and Mitigation

As discussed in the ***Natural Resources Technical Report*** (VDOT, 2014h), permits are anticipated as a result of unavoidable impacts to streams and wetlands from each CBA. For this study, the permit process would only proceed once the NEPA process is concluded. If and when the project advances into design, additional avoidance and minimization measures may be possible. Once the final engineering design is complete, the wetland impacts would be calculated and would provide the basis upon which wetland compensation would be determined. Non-tidal stream impacts would be compensated for by purchase of stream credits or onsite restoration of degraded streams. Mitigation of tidal stream or river impacts would be determined during the permitting stages with the appropriate agencies. The potential stream and wetland mitigation options considered for this study are discussed further in the ***Natural Resources Technical Report*** (VDOT, 2014h).

Water Quality

Under the No Build Alternative, there would be no new water quality impacts as a result of interstate improvements within the study area. The interstate was constructed prior to the passage of the Clean Water Act and does not include any SWM. Therefore, stormwater would continue to carry roadway generated pollutants into the surrounding water resources. It is reasonable to assume that since the existing facility lacks appropriate SWM controls, the No Build Alternative could inhibit the attainment of Total Maximum Daily Load (TMDL) goals for the Elizabeth River and streams within the study area.

Either CBA would generate pollutants during construction and operation. Sediment runoff produced during construction would be minimized by the production of and adherence to an approved erosion and sediment control plan. Temporary and permanent SWM measures, including SWM ponds, sediment basins, vegetative controls, and other measures, would be implemented to minimize potential degradation of water quality. These measures would reduce or detain discharge volumes and remove many pollutants. All VDOT projects on state-owned lands must comply with the Virginia Erosion & Sediment Control (ESC) Law and Regulations, the Virginia SWM Law and Regulations, the most current version of the VDOT Annual ESC and SWM Specifications and Standards, and the project-specific ESC and SWM plans. Either CBA would not inhibit the attainment of TMDL goals for the Elizabeth River and streams in the study area.

If and when the project advances into design, either CBA would be designed to comply with both federal and state stormwater requirements in place at that time. The inclusion of SWM facilities into either CBA would substantially improve stormwater runoff quality compared to the existing condition.

Floodplains

Under the No Build Alternative, there would be no new floodplain impacts as a result of interstate improvements within the study area.

Estimated impacts for 100-year and 500-year floodplains are presented in **Table 3-9** for each CBA. The table incorporates the estimated permanent impacts to floodplains beneath the bridges which would result from the area of the piers, as discussed in the ***Natural Resources Technical Report*** (VDOT, 2014h). Encroachments resulting from either CBA are not "significant encroachments" as defined in 23 CFR §650.105(q) and are discussed further in the ***Natural Resources Technical Report*** (VDOT, 2014h). If and when the project advances design, additional avoidance and minimization of potential impacts to floodplains may be possible.

Table 3-9: Estimated Total Floodplain Impacts by Alternative

Alternative	No Build	CBA 1		CBA 2	
		95 ft.	135 ft.	95 ft.	135 ft.
Estimated 100-year Floodplain Impacts (acres)	0.00	30.10	20.98	30.10	20.98
Estimated 500-year Floodplain Impacts (acres)	0.00`	3.79	3.75	3.79	3.75

3.5 WILDLIFE AND HABITAT

3.5.1 Existing Conditions

As discussed in the ***Natural Resources Technical Report*** (VDOT, 2014h), the study area encompasses both aquatic and terrestrial habitats in a suburban/urban mix of residential, commercial, and industrial land uses along I-64.

Terrestrial Wildlife and Habitat

Terrestrial wildlife within the study area include common mammals, such as squirrels, rabbits, raccoons, groundhogs, and foxes; birds such as song birds, waterfowl and shore birds; and various reptiles and amphibians (Virginia Department of Game and Inland Fisheries [DGIF], 2013). Despite the relatively high level of development through the corridor, several forested areas, which provide the primary terrestrial wildlife habitat within the study area, are located within the interchanges (see **Figure 3-4)**. Given their location within an interstate facility, these areas provide limited habitat value.

There are a total of 503 acres of forested areas within the 1,686-acre study area. Forested areas primarily characterized by evergreen trees cover approximately 110 total acres, predominately located within the eastern portion of the study area and near the High Rise Bridge. Forested areas characterized by deciduous trees are located generally in the central portion of the study area and near the High Rise Bridge and cover approximately 120 acres. The remaining 273 acres of forested areas are characterized by mixed evergreen and deciduous trees with large tracts in the central and western portions of the study area and several smaller tracts in the eastern portion.

The Virginia Department of Forestry (DOF) recommends avoidance of two forested areas due to their recreational benefits and presumed water quality benefits (see ***Appendix A–Correspondence)***. The first forested area is located partially within the northwestern portion of the study area near the Bowers Hill interchange and the second forested area is located partially within the study area located west of the High Rise Bridge (see **Figure 3-4)**. Additional discussion of terrestrial habitat and wildlife is included in the ***Natural Resources Technical Report*** (VDOT, 2014h).

Aquatic Wildlife and Habitat

Major aquatic resources within the study area include the Southern Branch of the Elizabeth River, Deep Creek, and the Gilmerton Deep Creek Canal. Both tidal and non-tidal waters are located within this area. A variety of aquatic species, including bivalves, fish, reptiles, amphibians, and aquatic birds rely on these surface water habitats for temporary and/or permanent habitat (DGIF, 2013).

Anadromous Fish

Anadromous fish waters are identified by DGIF as streams and rivers that have been used or have the potential to be used as migration pathways, spawning grounds or nursery areas (DGIF, 2013). The Southern Branch of the Elizabeth River in the proximity of the High Rise Bridge is listed as an anadromous fish waters (DGIF, 2013). Additional discussion of anadromous fish is included in the ***Natural Resources Technical Report*** (VDOT, 2014h).

3.5.2 Environmental Consequences

Terrestrial Wildlife and Habitat

Under the No Build Alternative, there would be no conversion of forested areas as a result of interstate improvements within the study area. Permanent impacts to forest resources from either CBA would consist of conversion of forested land to either pavement or maintained herbaceous or shrub land. **Table 3-10** presents the estimated forested areas impacts for each CBA.

Table 3-10: Estimated Forested Areas Impacts by Alternative

Alternative	No Build	CBA 1		CBA 2	
		95 ft.	135 ft.	95 ft.	135 ft.
Estimated Deciduous Forest Impacts (acres)	0.00	71.42	71.16	71.42	71.16
Estimated Evergreen Forest Impacts (acres)	0.00	49.78	46.27	49.78	46.27
Estimated Mixed Forest Impacts (acres)	0.00	151.33	151.33	151.33	151.33
Total Estimated Forested Areas Impacts (acres)	0.00	272.52	268.75	272.52	268.75

Impacts to forested areas characterized with evergreen trees would occur primarily in the I-464 interchange, impacts to forested areas characterized with deciduous trees would occur primarily in the Route 13 and Route 17 interchanges, and impacts to mixed forested areas would occur mainly in the Bowers Hill and Route 13 interchanges. For the purposes of this study, a worst case scenario is presented and all forested areas within interchanges are assumed to be impacted. Future forested areas impacts would be reduced if practicable based on further traffic and engineering studies. Although clearing of forested areas would include the displacement of wildlife and impact habitat, these areas generally

provide limited value as they are located within an interstate facility. Most of these forested areas are isolated by the interstate and other roadways in these urban and residential areas, therefore, impacts to the movement of terrestrial wildlife through these forested areas is expected to be minimal. If and when the project advances into design, impacts to the forest resources would be avoided and minimized to the greatest extent practicable. No impacts would be anticipated for the forest resources for which the DOF recommended avoidance.

Aquatic Wildlife and Habitat

As noted previously the existing facility was constructed prior to the passage of the Clean Water Act and does not include any SWM. Therefore, under the No Build Alternative stormwater would continue to carry roadway generated pollutants into the surrounding water resources. If and when the project advances into design, either CBA would be designed to comply with both federal and state stormwater requirements in place at that time. The inclusion of SWM facilities into either CBA would substantially improve stormwater runoff quality compared to the existing condition.

Anadromous Fish

Although there are no anticipated impacts to anadromous fish from either CBA, continued coordination with the appropriate agencies would occur if and when the project advances into design to reduce potential impacts to these resources. At the time of permitting, potential construction phase impacts would be addressed through time of year restrictions and/or special conditions that would reduce the likelihood of impacts to anadromous fish.

3.6 INDIRECT AND CUMULATIVE EFFECTS

3.6.1 Indirect Effects

The Council on Environmental Quality (CEQ) defines indirect effects as "…effects which are caused by the action and are later in time or farther removed in distance, but are still reasonably foreseeable. Indirect effects may include growth-inducing effects and other effects related to induced changes in the pattern of land use, population density or growth rate, and related effects on air and water and other natural systems, including ecosystems" (40 CFR 1508(a)). The methodology followed for analyzing indirect effects is prescribed in the Transportation Research Board's (TRB) National Cooperative Highway Research Program (NCHRP) Report 466, *Desk Reference for Estimating the Indirect Effects of Proposed Transportation Projects* (TRB, 2002). Additional detailed information on this process and associated analysis is located in the ***Indirect and Cumulative Effect Technical Report*** (VDOT, 2014g).

3.6.1.1 Indirect Effect Conclusion

As a result of the analysis conducted the consequences of the indirect effects are expected to be minimal. The study area consists of a portion I-64 and highly developed residential, commercial, and industrial areas. Construction of a 95 foot bridge would have indirect effects on future development. Although there are no current plans for land use development south of the bridge that require more than 95 feet of clearance, future development would be limited to that which relies on no more than 95 feet of clearance. The Southern Branch of the Elizabeth River is a river with a long history of adverse impacts. Significant indirect and cumulative effects are not anticipated to result from either CBA, see ***Indirect and Cumulative Effect Technical Report*** (VDOT, 2014g).

3.6.2 Cumulative Effects

CEQ defines cumulative effects (or impacts) as, "…the impact on the environment which results from the incremental impact of the action when added to other past, present, and reasonably foreseeable future actions regardless of what agency (federal or non-federal) or person undertakes such other actions. Cumulative effects can result from individually minor but collectively significant actions taking place over a period of time" (40 CFR § 1508.7). To document cumulative effects for this study, the analysis followed the five-part evaluation process outlined in Fritiofson v. Alexander, 772 F.2d 1225 (5th Cir. 1985), as described in FHWA's Guidance: Questions and Answers Regarding the Consideration of Indirect and Cumulative Impacts in the NEPA Process (FHWA, 2014). Additional detailed information on the evaluation process and associated analysis is located in the ***Indirect and Cumulative Effect Technical Report*** (VDOT, 2014g).

3.6.2.1 Cumulative Effects Conclusion

As a result of the analysis conducted, the No Build Alternative would not measurably alter the cumulative impacts related to socioeconomic, natural, or recreational resources. CBA 1 could enhance beneficial impacts to socioeconomic, natural, and recreational resources. CBA 2 would have similar impacts; however, its contribution to socioeconomic resources may not be as great, see ***Indirect and Cumulative Effect Technical Report*** (VDOT, 2014g).

3.7 SECTION 4(f) PROPERTIES

Pursuant to the provision of Section 4(f) of the U.S. Department of Transportation Act of 1966 (49 U.S.C. § 303(c)), Section 4(f) provides protection for publically owned parks, recreation areas, wildlife and/or waterfowl refuges, as well as significant historic sites, both publicly and privately owned, that are listed in NRHP or eligible for listing in the NRHP. FHWA cannot approve a transportation project that uses a Section 4(f) property, as defined in 23 CFR 774.17, unless it determines:

- There is no feasible and prudent avoidance alternative to the use of land from the property, and the action includes all possible planning to minimize harm to the property resulting from such use (23 CFR 774.3(a)); or
- The use of the Section 4(f) property, including any measures to minimize harm (such as avoidance, minimization, mitigation, or enhancement measures) committed to by the applicant, would have a de minimis impact on the property (23 CFR 774.3(b)).

Under Section 4(f), a use of a Section 4(f) property occurs (23 CFR 774.17):

- When land is permanently incorporated into a transportation facility;
- When there is a temporary occupancy of land that is adverse in terms of the statute's preservation purpose; or,
- When there is a constructive use.

Early in the development and analysis of transportation improvements to address the identified Purpose and Needs of the I-64 corridor, the study team conducted a site reconnaissance and reviewed property information using geographic information systems (GIS) data to identify potential impacts to properties that may qualify for protection under Section 4(f). The following four City of Chesapeake Public School (Chesapeake Public Schools) properties were identified within the study area: Deep Creek Elementary

School, Deep Creek Middle School, Deep Creek High School, and Crestwood Intermediate School (see ***Appendix A: Correspondence***). In November 2013, VDOT communicated these potential impacts with school officials to determine if Section 4(f) was applicable and to document any concerns the school officials may have. Specific to the four school properties within the study area:

- The specific area of the Deep Creek High School and Elementary School property that falls within the study area is not used for public school recreation/athletics or for non-school public recreation/athletics (such as community sports leagues). Therefore, the school property within the study area is not protected under the Section 4(f) statute.
- The specific area of the Deep Creek Middle School property that falls within the study area is currently used for public school recreation/athletics or for non-school public recreation/athletics (such as community sports leagues). Therefore, this property is protected under the Section 4(f) statute.
- The specific area of the Crestwood Intermediate School property that falls within the study area is on the periphery of the area used for public school recreation/athletics or for non-school public recreation/athletics (such as community sports leagues). Therefore, this property is protected under the Section 4(f) statute.

As the study progressed, VDOT worked to reduce potential impacts to these Section 4(f) properties. In May 2014, VDOT met with school officials to further discuss the Interstate 64/High Rise Bridge Corridor Study, its implications on Chesapeake Public Schools properties, and the consideration of a Section 4(f) use of these properties. The type of Section 4(f) "use" of each of the aforementioned school properties was then discussed according to 23 CFR 774 and VDOT indicated its intent to seek a de minimis finding. Following this meeting, school officials responded by indicating their concurrence with three of the four potential impact assumptions. Specifically, Chesapeake Public Schools indicated the following:

- Based on current site conditions and use of this property at the Deep Creek Elementary and Deep Creek High School site, Chesapeake Public Schools agreed that the impact should not have an adverse effect on the recreational features of the property. Therefore there is no Section 4(f) use to consider at this time.
- Based on the current site limitations and the use of this property at Deep Creek Middle School, the loss of 0.55 acre would create an adverse impact on this site's recreational and operational use. Chesapeake Public Schools indicated that it did not believe a de minimis finding would be appropriate.
- Based on current site conditions and use of this property at Crestwood Intermediate School, Chesapeake Public Schools agreed that the impact should not have an adverse effect on the recreational features of the property. Therefore, a de minimis finding is appropriate.

Based on the school official's input regarding this potential impact, VDOT and FHWA explored several options to better define and/or further minimize and avoid potential impacts to the Deep Creek Middle School property. In July 2014, VDOT presented revised plans to Chesapeake Public Schools. Chesapeake Public Schools indicated that the options would result in only temporary impacts to the Deep Creek Middle School property and would not be adverse. VDOT agreed to ensure that any CBA under consideration would not result in permanent impacts to the Deep Creek Middle School property.

Additionally, based on the coordination discussed above with Chesapeake Public Schools, FHWA may issue a de minimis impact finding for Crestwood Intermediate School and Deep Creek Middle School. Following the completion of the public review of this Draft EA, FHWA and VDOT would seek an official concurrence from Chesapeake Public Schools for a de minimis finding for these properties. Prior to making a de minimis determination, FHWA would publish its intent to make a de minimis finding that would be made available to the public. For additional information on coordination with Chesapeake Public Schools see **Chapter 4.0 (Coordination and Comments**) of this EA.

I 64/High Rise Bridge Corridor Study Area*

Water Bodies

Great Dismal Swamp

Streams in Study Area

Field Verified Non-Tidal Stream: 11,639'

Field Verified Tidal Stream: 101.13 acres

Other Stream

Watershed Sub-basin Boundary

The study area is a buffer around the road corridor that includes all natural, cultural and physical resources that must be analyzed in the NEPA document. It does not imply right-of-way take or construction impact.

Mapping Source: VDOT, City of Chesapeake, VA and the U.S. Geological Survey

Figure 3-1 Water Bodies

Interstate 64/High Rise Bridge Corridor Study Environmental Assessment

City of Chesapeake

State Project Number: 0064-131-783, P101; UPC: 104366
Federal Project Number: NH-IM-064-3(481)

Virginia Department of Transportation

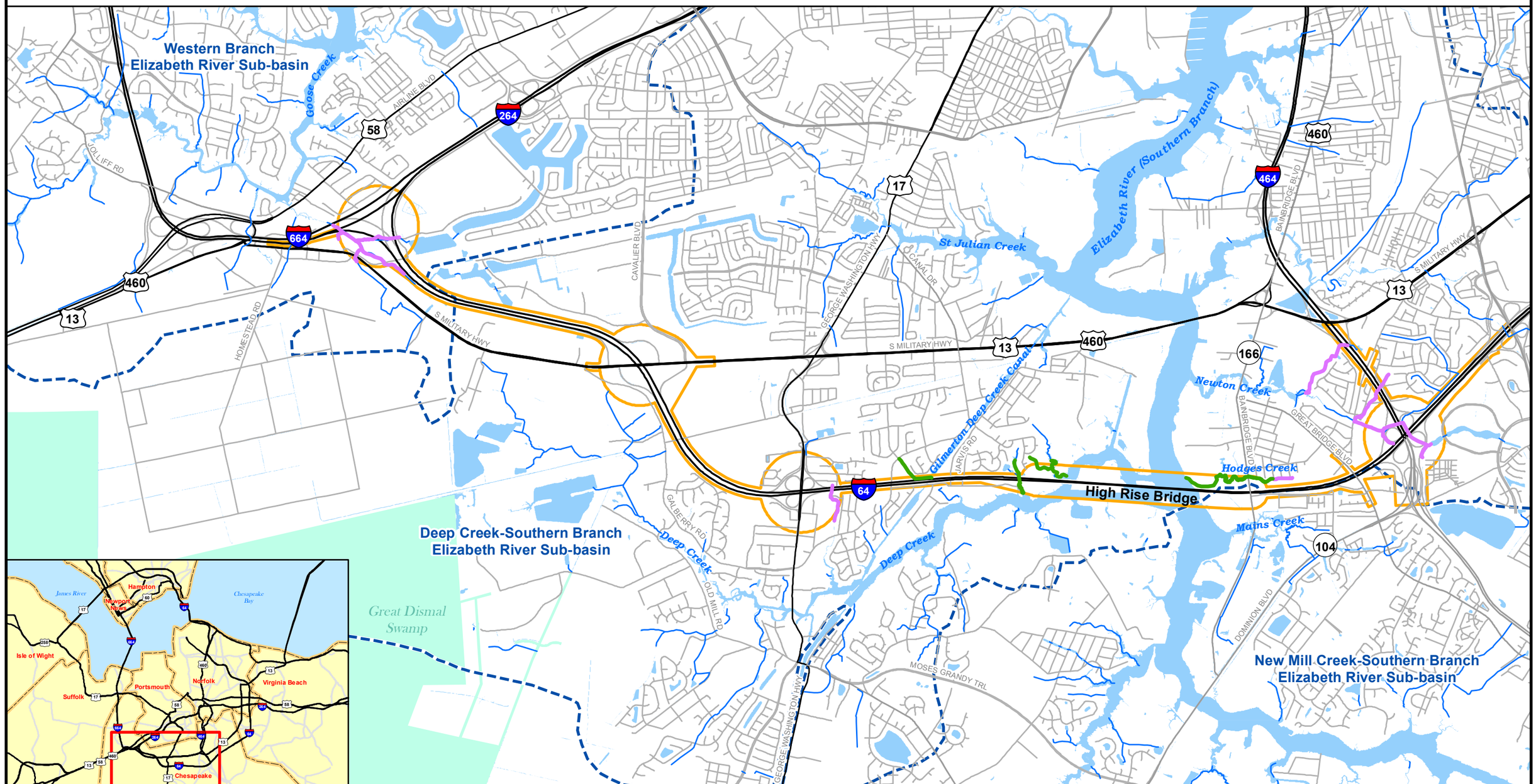

I 64/High Rise Bridge Corridor Study Area*

Water Bodies

Great Dismal Swamp

Wetlands in Study Area

E2EM, 42.54 acres

PEM, 4.75 acres

PFO, 44.07 acres

*The study area is a buffer around the road corridor that includes all natural, cultural and physical resources that must be analyzed in the NEPA document. It does not imply right-of-way take or construction impact.

Mapping Source: VDOT and City of Chesapeake

Figure 3-2 Wetlands

Interstate 64/High Rise Bridge Corridor Study Environmental Assessment

City of Chesapeake

State Project Number: 0064-131-783, P101; UPC: 104366
Federal Project Number: NH-IM-064-3(481)

Virginia Department of Transportation

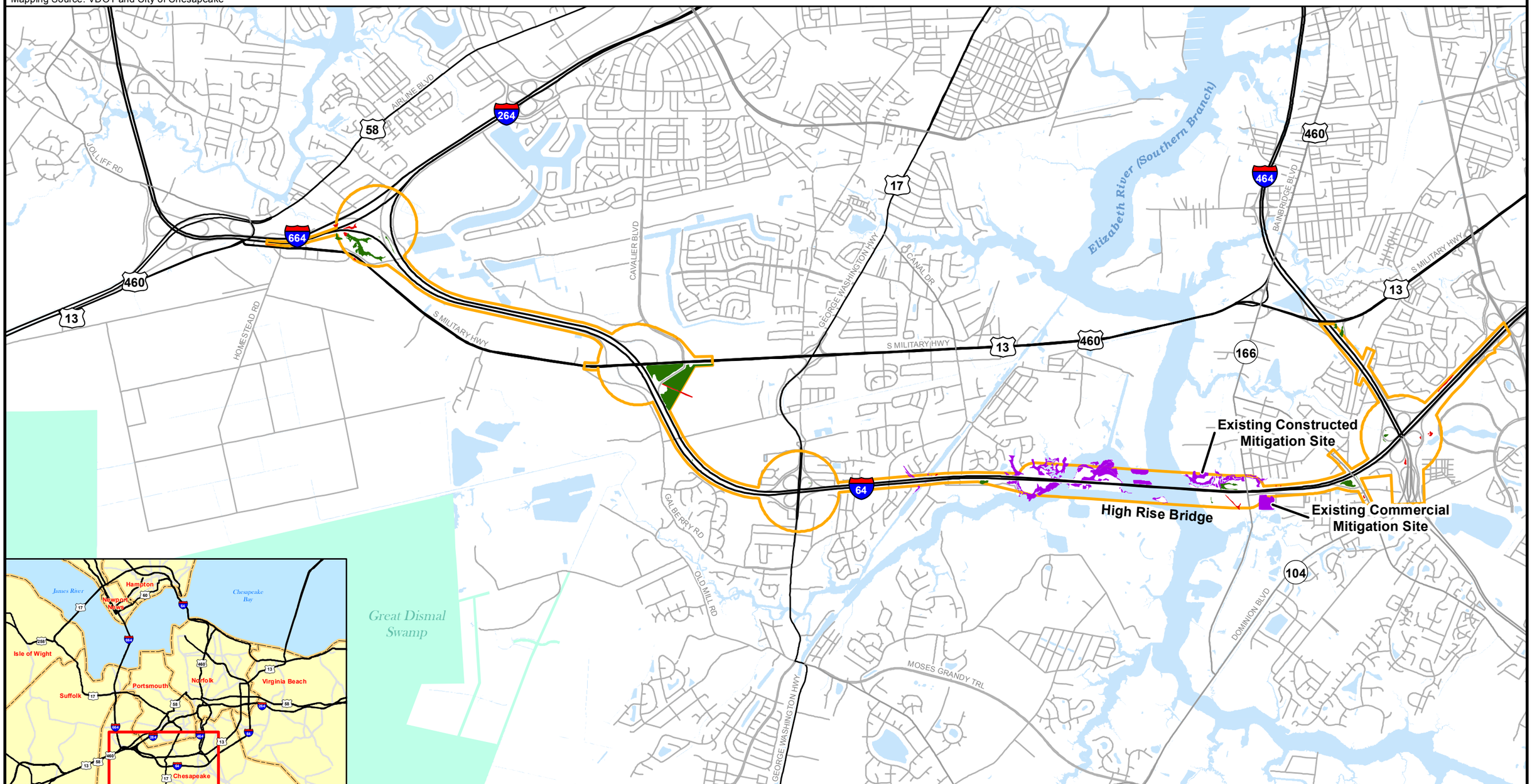

I 64/High Rise Bridge Corridor Study Area*

Water Bodies

Great Dismal Swamp

Floodplains in Study Area

100 Year Floodplain, 290 acres

500 Year Floodplain, 20 acres

Figure 3-3 Floodplains

Interstate 64/High Rise Bridge Corridor Study
Environmental Assessment

City of Chesapeake

State Project Number: 0064-131-783, P101; UPC: 104366
Federal Project Number: NH-IM-064-3(481)

VDOT Virginia Department of Transportation

*The study area is a buffer around the road corridor that includes all natural, cultural and physical resources that must be analyzed in the NEPA document. It does not imply right-of-way take or construction impact.

Mapping Source: VDOT and City of Chesapeake

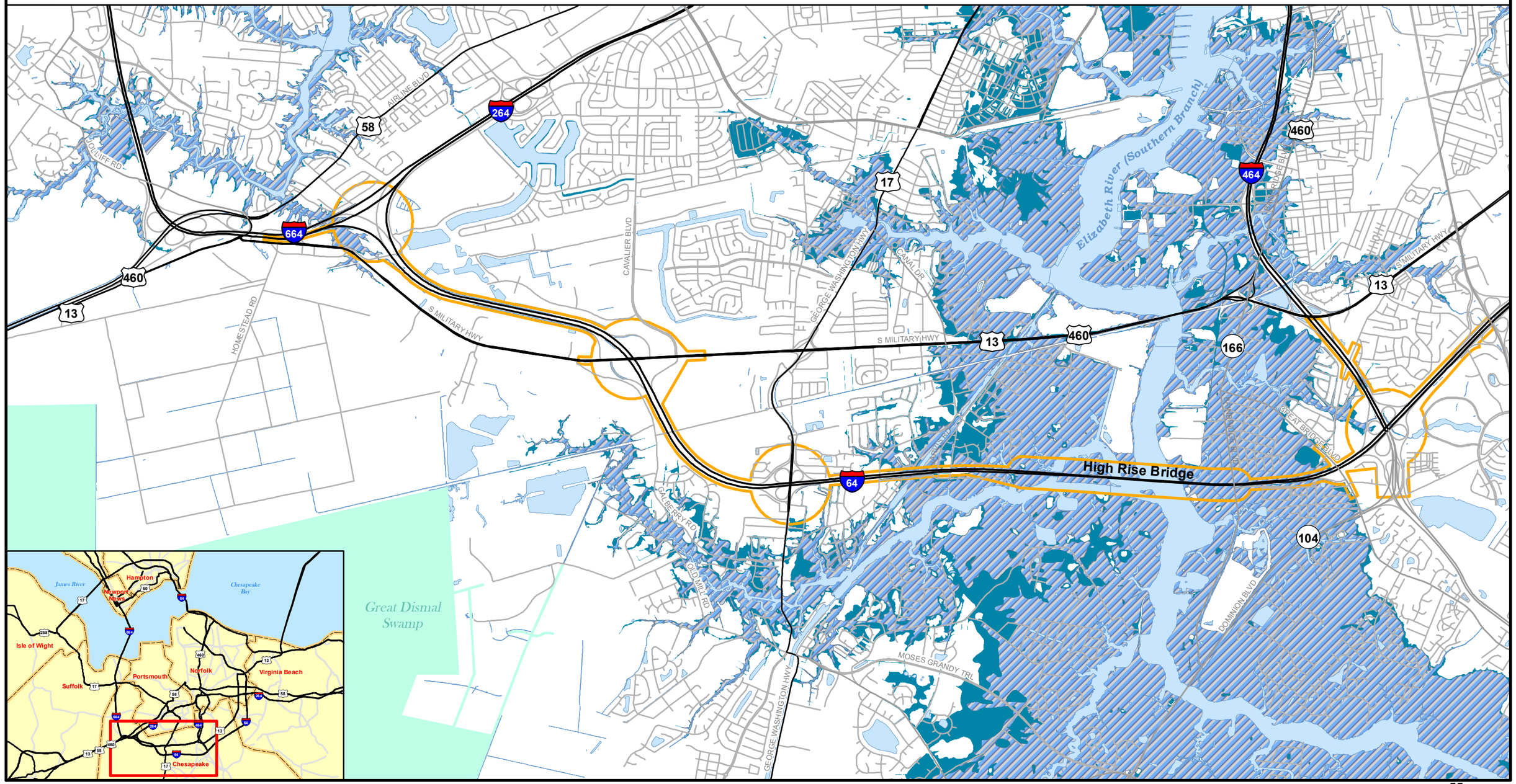

Figure 3-4 Forested Areas

Interstate 64/High Rise Bridge Corridor Study
Environmental Assessment

City of Chesapeake

State Project Number: 0064-131-783, P101; UPC: 104366
Federal Project Number: NH-IM-064-3(481)

I 64/High Rise Bridge Corridor Study Area*
Water Bodies
Great Dismal Swamp

Forested Area in Study Area
Deciduous, 120 acres
Evergreen, 110 acres
Mixed, 273 acres

*The study area is a buffer around the road corridor that includes all natural, cultural and physical resources that must be analyzed in the NEPA document. It does not imply right-of-way take or construction impact.

Mapping Source: VDOT and City of Chesapeake

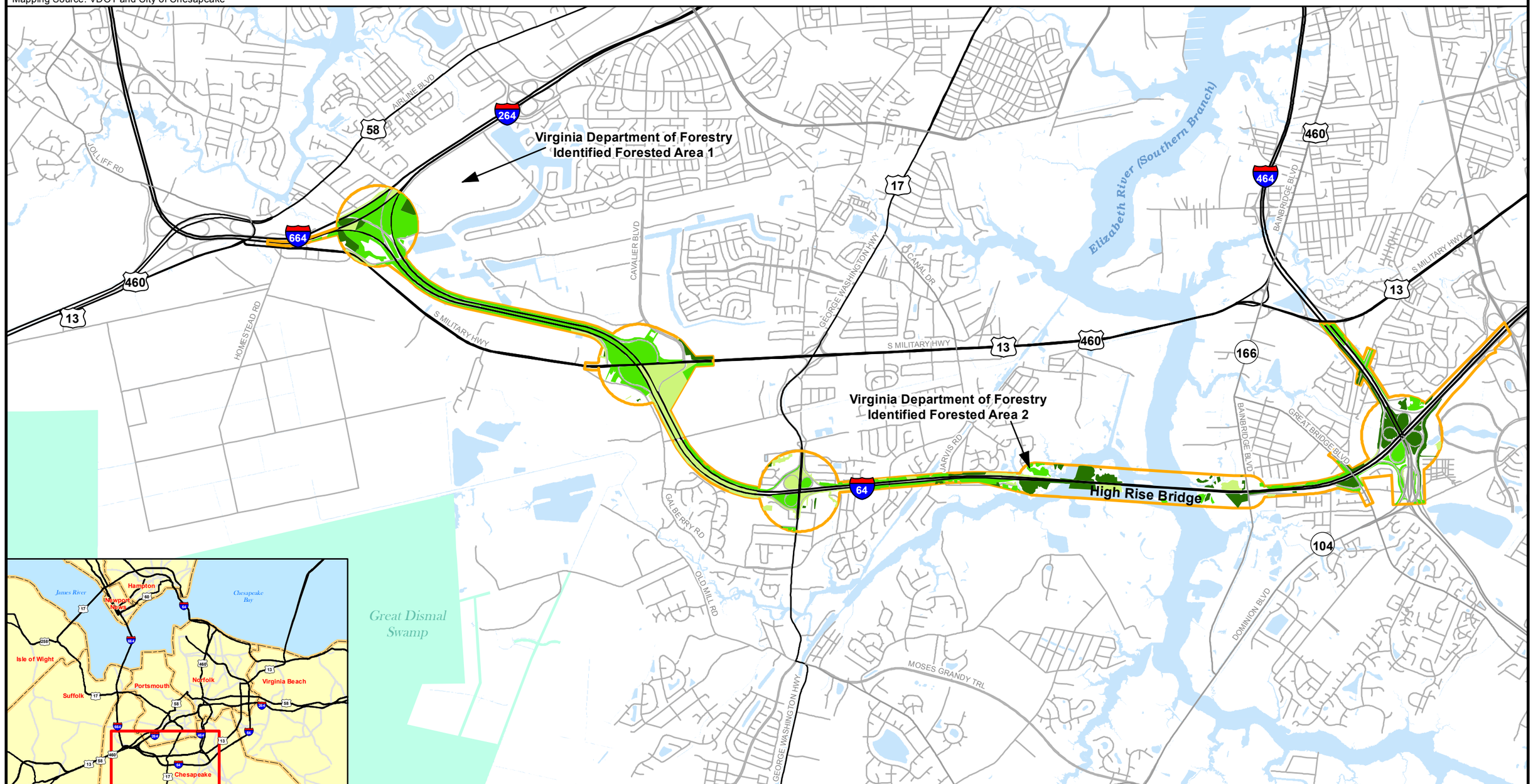

Chapter 4.0 COORDINATION AND COMMENTS

Pursuant to 23 CFR 771.111 and the CEQ's *Memorandum for General Counsels, NEPA Liaisons, and Participants in Scoping*, agency consultation and public participation for this study has been accomplished through formal and informal methods, which include project development team meetings, interagency correspondence, and a Citizen Information meeting (CIM). These elements of the study are discussed in greater detail in the sections below. Additionally, as guided by FHWA Order 6640.23A and FHWA Memorandum *Guidance on Environmental Justice and NEPA*, proactive efforts were taken to ensure meaningful opportunities for public participation by all interested parties, including low-income and minority populations.

4.1 AGENCY COORDINATION

On August 26, 2013, VDOT mailed scoping letters to the following federal, state, and local agencies and organizations to obtain pertinent information and to identify key issues regarding the potential environmental impacts for this study.

- Chesapeake Bay Local Assistance
- City of Chesapeake
- Commonwealth Transportation Board
- Dominion Resources Services, Inc.
- Federal Emergency Management Agency
- Hampton Roads Transportation Planning Organization
- National Marine Fisheries Service
- The Elizabeth River Project
- United States Army Corps of Engineers
- United States Coast Guard
- United States Department of Agriculture, Natural Resources Conservation Service
- United States Department of the Interior
    - Fish and Wildlife Service
    - Great Dismal Swamp National Wildlife Refuge
    - National Park Service, Northeast Region
    - Office of Environmental Policy and Compliance
- United States Environmental Protection Agency
- Virginia Department of Agricultural and Consumer Services (DACS)
- Virginia Department of Conservation and Recreation (DCR)
- Virginia Department of Emergency Management
- Virginia Department of Environmental Quality
    - Division of Land Protection and Revitalization
    - Environmental Impact Review
    - Office of Air Data Analysis
    - Office of Wetlands and Stream Protection
    - Tidewater Regional Office
    - Water Division
- Virginia Department of Forestry
- Virginia Department of Game and Inland Fisheries
- Virginia Department of Historic Resources
- Virginia Department of Health
- Virginia Department of Mines, Minerals and Energy
- Virginia Department of Rail and Public Transportation
- Virginia Marine Resources Commission (VMRC)
- Virginia Maritime Association
- Virginia Outdoors Foundation
- Virginia Pilot Association
- Virginia State Police Department

4.1.1 Agency Scoping Responses

In response to the scoping letters, VDOT received responses from 10 agencies identifying transportation needs, environmental resources, and other relevant factors to be analyzed in this EA. Responses were received on behalf of the following agencies (see ***Appendix A: Correspondence*** for responses):

- DHR – Response noted that the undertaking has the potential to affect historic properties and requested VDOT to continue to consult with them pursuant to Section 106.
- NRCS – Response indicated that the corridor does not contain prime, unique statewide or local important farmland and therefore FPPA does not apply.
- USFWS – Response noted that USFWS does not provide individual responses to requests for environmental reviews and directed VDOT to utilize their project review website to ensure that potential impacts to important natural resources are minimized and appropriate permits are applied, see also the ***Natural Resources Technical Report*** (VDOT, 2014h).
- VDH – Response noted that no ground water wells are within a one mile radius of the study, not within Zone 1 or 2 of any public water sources, no apparent impacts to public drinking water sources, and that the local utility would need to verify potential impacts to public water distribution systems or sanitary sewage collection systems.
- HRTPO – Response noted the current and future congestion problems within the corridor. Also recommended that VDOT differentiate between the proposed widening and the proposed replacement of the existing bridge as it develops its construction phasing and cost estimates.
- DEQ – Response noted that VDOT did not identify solid or hazardous waste issues and noted that when the environmental impact report is compiled/written it should include investigation of these items. DEQ provided multiple sources to obtain the necessary information to address these issues. An additional response was received that outlined DEQ's process for reviewing potential environmental impacts associated with the study.
- DOF – Response noted support for widening of existing corridor rather than creating a new one in order to minimize impacts. Response also referenced the I-64 Peninsula study technical documentation and approaches, and recommends following the same approach. Additionally the response identifies forested areas that DOF recommend avoiding.
- DCR – Response noted that DCR searched it Biotics Data System and provided the natural heritage resources within the study area. Additionally, the response recommended additional actions to be taken to identify natural heritage resources, including a search of the DGIF database of wildlife location, see also the ***Natural Resources Technical Report*** (VDOT, 2014h).
- VMRC – Response noted VMRC's regulatory authority, and noted that if the project involved any encroachments of channelward of mean low water a permit may be required from their agency. Additionally, since VMRC currently acts as the Wetland Board in Chesapeake, permits from their agency may be required if there are impacts to tidal wetlands.
- VDACS – Response noted lands zoned for agriculture do not appear to be involved. Additionally, VDACS recommended further coordination with several of the state agencies listed above.

4.2 PUBLIC INVOLVEMENT

Public involvement efforts for the Interstate 64/High Rise Bridge Corridor Study include both a CIM and a Location Public Hearing. VDOT uses these meetings as public participation tools for complex EAs as a way to keep the public informed of study updates and to provide the public a chance to raise questions and speak with VDOT representatives.

4.2.1 Citizen Information Meeting

VDOT held a CIM for this study on September 18, 2013 at Deep Creek High School to inform the public about the study and to solicit input from the public and other stakeholders. Pursuant to federal and state regulatory requirements and in accordance with VDOT's Policy Manual for Public Participation in Transportation Projects (VDOT, 2014k), the meeting was advertised in local newspapers, on the study website, and via a press release. The open house format for the CIM included display boards depicting general information on the study, including the study schedule and purpose of the study. Comment sheets and informational handouts were provided at the meeting and also were made available on the study website. VDOT representatives were available to discuss the study and answer questions. A total of 82 citizens attended the CIM and 22 public comments were received as a result of the 30-day comment period following the CIM. The primary concerns expressed at the meeting included noise abatement, property displacements, tolling, and the effects of traffic and roadway construction on local businesses. All comments received during the CIM and public comment period have become part of the study record.

4.2.2 Location Public Hearing

Following the release of this EA, VDOT will hold a Location Public Hearing for the study. The Hearing is tentatively scheduled for November 6, 2014 at the Tidewater Community College Portsmouth Campus, providing stakeholders another opportunity for public participation. Pursuant to federal and state regulatory requirements and in accordance with VDOT's Policy Manual for Public Participation in Transportation Projects (VDOT, 2014k), the meeting will be advertised in local newspapers, on the study website, and via a press release. Additionally, Location Public Hearing notification letters will be sent out to all property owners within or adjacent to the study area 30 days prior to the scheduled hearing date per the Code of Virginia §33.1-223.2:30. The purpose of the Location Public Hearing will be to present the findings of this EA and associated technical documents, provide a discussion forum between the public and study team, and solicit input and comments from the community. In addition, there will be a 30-day public comment period following the publication of the EA. All comments received during the public hearing and public comment period will become part of the study record.

4.3 ADDITIONAL COORDINATION EFFORTS

In addition to the coordination previously discussed, numerous other meetings and coordination efforts were conducted with federal, state, and local agencies throughout the study process.

4.3.1 Federal Partnering

In Virginia, a formal process is in place whereby complex projects sponsored by FHWA and VDOT are presented at a series of meetings with federal resource and regulatory agencies. Through this process, partner agencies are afforded an opportunity to provide early and continued input on scoping, purpose and need, and concept development. This study was presented to the partner agencies at four meetings in May 2013, November 2013, February 2014, and May 2014. These meetings are summarized below.

May 2, 2013, Partnering Meeting: The purpose of the May 2, 2013 meeting was to introduce the study and solicit early input from the agencies. Attendees included representatives of FHWA, VDOT, the USEPA, and the USFWS. Topics of discussion included the proposed scope and study area, previous studies conducted, existing conditions, preliminary purpose and need, and schedule. This meeting resulted in a decision to document the sturgeon population in the study area and identified how wetland data sheets and Unified Stream Methodology (USM) forms would be used.

November 13, 2013: The purpose of the November 13, 2013 meeting was to brief the federal agencies on the proposed purpose and need for the study. Attendees included representatives of FHWA, VDOT, the USEPA, USACE, USCG, and USFWS. Topics of discussion included the proposed purpose and need, agency scoping and responses, results of the CIM, review of preliminary environmental analysis and field work, and upcoming tasks.

February 12, 2014: The purpose of the February 12, 2014 meeting was to update the federal partners on the alternatives development process. Attendees included representatives of FHWA, VDOT, the USEPA, USACE, USCG, National Oceanic and Atmospheric Administration (NOAA), NMFS, and USFWS. Topics of discussion included the review of the Navigational Evaluation Technical Study, traffic forecasting, development of alternatives, and schedule.

May 14, 2014: The purpose of the May 14, 2014 meeting was to solicit input from the federal partners on several conceptual alternatives. Attendees included representatives of FHWA, VDOT, the USEPA, USACE, USCG, and USFWS. Topics of discussion included the presentation of conceptual options under consideration for the mainline and bridge improvements, review of potential preliminary impacts under each option, and schedule. At this meeting, the USACE indicated that impacting the Chesapeake Land Development Tidal Bank would be preferential to impacting naturally occurring tidal wetlands along Hodges Creek.

4.3.2 United States Coast Guard

As it is a responsibility of the USCG to preserve the public right of navigation and ensure the safe and unencumbered passage of navigation on the nation's waterways, VDOT initiated consultation with the USCG's Fifth Coast Guard District regarding the study on July 23, 2013. At that time, the USCG recommended that VDOT proceed with a Navigational Evaluation study to determine the vertical clearance required to meet the reasonable needs of navigation at the I-64 crossing of the Southern Branch of the Elizabeth River. Although a Navigational Evaluation is not required by USCG until the bridge permit application is submitted, VDOT and USCG agreed it was appropriate to include the evaluation in the planning process. In doing so, the agencies would meet the goals of the forthcoming Memorandum of Agreement between FHWA and USCG which stresses including both agencies' planning tools and expertise in the NEPA process. VDOT and USCG also agreed that completing the Navigational

Evaluation early in the NEPA process would allow USCG to provide direction on the appropriate bridge clearance that should be studied in the EA. The ***Navigational Evaluation Technical Report*** (VDOT, 2014i) documents the methods and results of this analysis. On January 21, 2014, VDOT submitted the draft report to USCG to request comment and concurrence that a 95-foot vertical clearance met the reasonable needs of navigation for the purposes of the study. On February 6, 2014 USCG acknowledged receipt of the document, but stated that it would be unable to provide direction on a single bridge clearance that could be studied in the EA. USCG would make its determination on the reasonable needs of navigation as part of the bridge permit process.

Although it did not provide official comment, USCG did note its interest in the comment submitted by the VMA. To assist VDOT in completing the ***Navigational Evaluation Technical Report*** (VDOT, 2014i) USCG issued a Preliminary Public Notice (PPN) requesting comment on a 95-foot vertical clearance. In response to the USCGPPN, Chesapeake City Council, the Chesapeake Port Authority, and the Hampton Roads Chamber of Commerce passed resolutions in support of a 95-foot bridge. VMA provided the only official comment opposed to this clearance. VMA suggested that a 135-foot vertical clearance was necessary to allow for future economic development in the region see ***Navigational Evaluation Technical Report, Appendix B: USCG Preliminary Public Notice Comments*** (VDOT, 2014i). USCG organized a meeting between VDOT and VMA to discuss the request. During the meeting, VMA presented potential future developments along the river that could benefit from a 135-foot bridge clearance. These potential future developments were based on private land acquisition, expanded dredging by USACE, and technological advances in shipping vessels. At the conclusion of the meeting, USCG suggested that VDOT could analyze 95- and 135-foot clearances in the EA. USCG acknowledged that it would not be able to identify the bridge clearance until the bridge permit application was submitted. Based on this direction, the EA, ***Navigational Evaluation Technical Report*** (VDOT, 2014i) and other associated technical documents have included both 95- and 135-foot bridge heights.

Due to the USCG's jurisdiction by law over the navigational waterways and clearances, and in accordance with 40 CFR 1501.6 of the CEQ's Regulations for Implementing the Procedural Provisions of NEPA and the 2014 Memorandum of Agreement between FHWA and the USCG, FHWA invited the USCG to become a cooperating agency. On June 9, 2014 the USCG accepted FHWA's invitation to become a cooperating agency and acknowledged that the agency was prepared to work with FHWA in executing and satisfying their role under NEPA see ***Navigational Evaluation Technical Report, Appendix E: USCG Cooperating Agency Letter*** (VDOT, 2014i).

4.3.3 Chesapeake Public Schools

Early in the development and analysis of conceptual alternatives the study team identified potential impacts to four Chesapeake Public School properties: Deep Creek Elementary School, Deep Creek Middle School, Deep Creek High School, and Crestwood Intermediate School. In November 2013, VDOT communicated these potential impacts with school officials to determine if Section 4(f) of the Department of Transportation Act was applicable and to document any concerns the school officials may have with the potential impacts. In November 2013, school officials responded with preliminary information, confirming to VDOT that these properties provide the general public opportunities for recreational use.

4.3.4 Other Public Outreach

Mailing List

A study mailing list was developed, and property access letters were mailed pursuant to §33.1-94 of the Code of Virginia. On four separate occasions, VDOT mailed property owners within the study area notification that an agent of VDOT may need to access their property to locate property lines and utilities; locate and review physical features and existing conditions; take photographs; talk to property owners; verify property tax information; perform environmental resource surveys; investigate potential environmental impacts; and conduct all testing and sampling, including, but not limited to shovel tests, soil samples, and borings. The letter included contact information for the VDOT Project Manager, should letter recipients have questions or concerns.

Website

Information for the study, including the EA and all technical documentation, is made available to the public through the following VDOT website: www.64HighRise.org. The website has been updated as new information has become available. For example, upon initiation of the study a notice was posted to provide preliminary study information. As the study progressed and a CIM date was set, the date along with meeting material was posted and included comment forms for the public to provide feedback on the study. Additionally, as the Navigational evaluation progressed a link was posted on the website to the USCG PPN.

Chapter 5.0 REFERENCES

American Association of State Highway and Transportation Officials [AASHTO]. (2011). *A Policy on Geometric Design of Highways and Streets*, (Green Book) 6th Edition. Washington, DC: American Association of State Highway and Transportation Officials.

City of Chesapeake Planning Department. (2005, March 9). *2050 Master Transportation Plan: Comprehensive Plan Update*. Chesapeake, VA: City of Chesapeake. Retrieved August 25, 2013 from http://www.cityofchesapeake.net/Page3147.aspx.

Department of Environmental Quality [DEQ]. (2014, April 15). *2012 Final Water Quality Assessment GIS Applications, 2012 Final Any Use Map Service*. Retrieved April 15, 2014 from http://www.deq.virginia.gov/mapper_ext/default.aspx?service=public/2012_adb_anyuse.

Department of Environmental Quality [DEQ]. (2012, March). *Final 2012 305(b)/305(d) Water Quality Assessment Integrated Report*. Richmond, VA: Department of Environmental Quality, Office of Water Monitoring and Assessment. Retrieved April 15, 2014 from http://www.deq.state.va.us/Programs/Water/WaterQualityInformationTMDLs/WaterQualityAssessments/2012305(b)303(d)IntegratedReport.aspx.

Department of Game and Inland Fisheries [DGIF]. (2011). *Canebrake Rattlesnake Conservation Plan.* Bureau of Wildlife Resources, DGIF, Richmond, VA. 25 pp.

Department of Game and Inland Fisheries [DGIF]. (2013, September 24). *Virginia Fish and Wildlife Information Service (VaFWIS)*. Accessed September 24, 2013 from http://vafwis.org/fwis/index.asp.

Federal Emergency Management Agency [FEMA]. (1999, May 2). *Flood Rate Insurance Map: City of Chesapeake, Virginia*. Map Numbers 5100340010C, 5100340011C, 5100340020C, 5100340021C, 5100340022C, 5100340023C, and 5100340024C. Washington, D.C.: Federal Emergency Management Agency.

Federal Highway Administration [FHWA] (2014b, September 22). *Road Pricing: Tolling Programs*. Washington, DC: US Department of Transportation, Federal Highway Administration. Retrieved September 22, 2014 from http://www.fhwa.dot.gov/ipd/revenue/road_pricing/tolling_pricing/federal_tolling_programs.aspx

Hampton Roads Planning District Commission [HRPDC]. (2009, January). V*irginia's Hampton Roads Regional Profile*. Chesapeake, VA: Hampton Roads Planning District Commission. Retrieved August 21 from http://www.hrp.org/Site/docs/ResourceLibrary/HR_Performs_Regional_Profile_FINAL_01-30-09.pdf.

Hampton Roads Planning District Commission [HRPDC]. (2013, December). *Hampton Roads 2040 Socioeconomic Forecast*. Chesapeake, VA: Hampton Roads Planning District Commission. Retrieved August 22, 2013 from http://www.hrpdc.org/uploads/docs/2040_Final_Forecast_Tables_for_HRPDC.pdf.

Hampton Roads Transportation Planning Organization [HRTPO]. (2008, December). Hampton Roads Regional Travel Delay Study. Chesapeake, VA: Hampton Roads Transportation Planning Organization.

Hampton Roads Transportation Planning Organization [HRTPO]. (2012, November). *Hampton Roads Regional Bridge Study*. Chesapeake, VA: Hampton Roads Transportation Planning Organization.

Hampton Roads Transportation Planning Organization [HRTPO]. (2013, March 14). *Hampton Roads Transportation Project Priorities*. Chesapeake, VA: Hampton Roads Transportation Planning Organization. Retrieved August 22, 2013 from http://www.hrtpo.org/uploads/docs/032014TPO-A21-For%20Your%20Information.pdf

Hampton Roads Transportation Planning Organization [HRTPO]. (2013, March 21). *Hampton Roads Transportation Project Priorities*. Chesapeake, VA: Hampton Roads Transportation Planning Organization. Retrieved August 22, 2013 from http://hrtpo.org/uploads/docs/Projects_Handout_Final_updated_3.25.13_v3.pdf

Keeley, Brian W. and Merlin D. Tuttle. (1999). *Bats in American Bridges*. Bat Conservation International, Inc., Resource Publication No. 4. Retrieved August 7, 2014 from http://www.batcon.org/pdfs/bridges/BatsBridges2.pdf.

Nichols, K. (2012, November 15). *Special Report #10: Hampton Roads Regional Bridge Study – An Analysis of Critical Connections*. Chesapeake, VA: Hampton Roads Transportation Planning Organization.

Office of Intermodal Planning and Investment. (2010, March). *Virginia's Long-Range Multimodal Transportation Plan, Corridors of Statewide Significance: East-West Corridor*. Richmond, VA: Commonwealth Transportation Board.

Transportation Research Board. (2010). *Highway Capacity Manual*. Washington, DC: The National Academies.

Trenberth, K. (2005, June 17). Uncertainty in Hurricanes and Global Warming. *Science*, *308* (5729). Retrieved August 22, 2013 from http://www.sciencemag.org/content/308/5729/1753.full#aff-1.

United States Army Corps of Engineers [USACE], Norfolk District and Virginia Department of Environmental Quality (2007, January 18). *Unified Stream Methodology for use in Virginia*. Accessed April 14, 2014 from http://www.deq.virginia.gov/Portals/0/DEQ/Water/WetlandsStreams/USMFinal_01-18-07.pdf.

United States Army Corps of Engineers [USACE]. (2014, April 9). *Regulatory In lieu fee and Bank Information Tracking System (RIBITS)*. Accessed April 9, 2014 from https://rsgisias.crrel.usace.army.mil/ribits/f?p=107:2.

United States Census Bureau. (2011). 2007-2011 American Community Survey, Total Population. Retrieved August 14, 2013 from http://factfinder2.census.gov/faces/tableservices/jsf/pages/productview.xhtml?pid=ACS_11_1YR_B01003&prodType=table.

United States Census Bureau. (2013, March). *Annual Estimates of the Population of Metropolitan and Micropolitan Statistical Areas: April 1, 2010 to July 1, 2012*. Washington, DC: US Census Bureau, Population Division. Retrieved August 21, 2013 from http://www.census.gov/popest/data/metro/totals/2012/.

United States Census Bureau. (2013, March). *Core Based Statistical Areas (CBAs) and Combined Statistical Areas (CSAs), February 2013*. Washington, DC: US Census Bureau, Population Division, Office of Management and Budget. Retrieved August 21, 2013 from http://www.census.gov/population/metro/data/def.html.

United States Fish and Wildlife Service [USFWS]. (2013, September 24). *Information, Planning, and Conservation System*. Washington, D.C.: U.S. Department of the Interior, U.S. Fish and Wildlife Service. Accessed September 24, 2013 from http://ecos.fws.gov/ipac/.

United States Fish and Wildlife Service [USFWS]. (2014A, April 29). *Information, Planning, and Conservation System*. Washington, D.C.: U.S. Department of the Interior, U.S. Fish and Wildlife Service. Accessed April 29, 2014 from http://ecos.fws.gov/ipac/.

United States Fish and Wildlife Service [USFWS]. (2014B, April 1). *Northern Long-Eared Bat, Myotis septentrionalis*. Washington, D.C.: U.S. Department of the Interior, U.S. Fish and Wildlife Service. Accessed April 29, 2014 from http://www.fws.gov/midwest/endangered/mammals/nlba/.USFWS (2014A, April 3).

United States Fish and Wildlife Service [USFWS]. (2014C, January 1). *Northern Long-Eared Bat Interim Conference and Planning Guidance, USFWS Regions 2,3,4,5, &6*. Washington, D.C.: U.S. Department of the Interior, U.S. Fish and Wildlife Service. Accessed August 7, 2014 from http://www.batcon.org/pdfs/bridges/BatsBridges2.pdf.

United States Geological Survey [USGS]. (2013, November 19). *National Map Viewer*. Reston, VA: U.S. Department of the Interior, U.S. Geological Survey. Accessed November 19, 2013 from http://viewer.nationalmap.gov/viewer/.

United States Government Printing Office [GPO]. (2014). *Code of Federal Regulations*. Retrieved April 25, 2014 from http://www.gpo.gov/fdsys/pkg/CFR-2009-title23-vol1/pdf/CFR-2009-title23-vol1-sec650-105.pdf.

Virginia Department of Transportation [VDOT]. (1996, March). *Major Investment Study*. Richmond, VA: Commonwealth of Virginia.

Virginia Department of Transportation [VDOT]. (1997, May 19). *Environmental Assessment: I-64 Widening and HOV Study – City of Chesapeake*. Richmond, VA: Virginia Department of Transportation, Environmental Division.

Virginia Department of Transportation [VDOT]. (1999, September 20). *Environmental Assessment / Draft Section 4(f) Evaluation: Insterstate-64 Improvements, City of Chesapeake.* Richmond, VA: Virginia Department of Transportation, Environmental Division.

Virginia Department of Transportation [VDOT]. (2005). *Virginia Highway Functional Classification, City of Chesapeake 2005 Functional Classification:* Richmond, VA: Virginia Department of Transportation. http://www.virginiadot.org/projects/resources/fxn_class/Hampton_Roads/City_of_Chesapeake.pdf

Virginia Department of Transportation [VDOT]. (2007). *Revised Environmental Assessment: I-64.* Richmond, VA: Virginia Department of Transportation.

Virginia Department of Transportation [VDOT]. (2013, June). *Virginia Hurricane Evacuation Guide*. Richmond, VA: Commonwealth of Virginia.

Virginia Department of Transportation [VDOT]. (2014a). Air Quality Analysis Technical Report. Richmond, Virginia: Virginia Department of Transportation. Retrieved from www.64HighRise.org.

Virginia Department of Transportation [VDOT]. (2014b). Alternatives Development Technical Report. Richmond, Virginia: Virginia Department of Transportation. Retrieved from www.64HighRise.org.

Virginia Department of Transportation [VDOT]. (2014c). Archeological Survey Report. Richmond, Virginia: Virginia Department of Transportation. Retrieved from www.64HighRise.org.

Virginia Department of Transportation [VDOT]. (2014d). Architectural Survey Report. Richmond, Virginia: Virginia Department of Transportation. Retrieved from www.64HighRise.org.

Virginia Department of Transportation [VDOT]. (2014e). *Bridge Design Manual*. Richmond, Virginia: Virginia Department of Transportation.

Virginia Department of Transportation [VDOT]. (2014f). Hazardous Materials Technical Memorandum. Richmond, Virginia: Virginia Department of Transportation. Retrieved from www.64HighRise.org.

Virginia Department of Transportation [VDOT]. (2014g). Indirect and Cumulative Effects Technical Report. Richmond, Virginia: Virginia Department of Transportation. Retrieved from www.64HighRise.org.

Virginia Department of Transportation [VDOT]. (2014h). Natural Resources Technical Report. Richmond, Virginia: Virginia Department of Transportation. Retrieved from www.64HighRise.org.

Virginia Department of Transportation [VDOT]. (2014i). Navigational Evaluation Technical Report. Richmond, Virginia: Virginia Department of Transportation. Retrieved from www.64HighRise.org.

Virginia Department of Transportation [VDOT]. (2014j). Noise Analysis Technical Report. Richmond, Virginia: Virginia Department of Transportation. Retrieved from www.64HighRise.org.

Virginia Department of Transportation [VDOT]. (2014k). *Policy Manual for Public Participation in Transportation Projects*. Richmond, Virginia: Virginia Department of Transportation.

Virginia Department of Transportation [VDOT]. (2014l). Socioeconomic, Land Use and Community Facilities Technical Report. Richmond, Virginia: Virginia Department of Transportation. Retrieved from www.64HighRise.org.

Virginia Department of Transportation [VDOT]. (2014m). Traffic & Transportation Technical Report. Richmond, Virginia: Virginia Department of Transportation. Retrieved from www.64HighRise.org.

Weldon Cooper Center. (2012). *Hampton Roads Annual Population Estimates*. Chesapeake, VA: Hampton Roads Planning District Commission. Retrieved August 21, 2013 from http://www.hrpdc.org/page/data-book/

Appendix A: CORRESPONDENCE

U.S. Department
of Transportation

**Federal Highway
Administration**

Virginia Division
(804)775-3320

P.O. Box 10249
400 N. 8th Street Rm. 750
Richmond, Virginia 23240
http://www.fhwa.dot.gov/vadiv/

IN REPLY REFER TO:

May 16, 2014

Interstate 64/High Rise Bridge Corridor Study
Cooperating Agency Invitation

Mr. Waverly Gregory
Commander, Fifth Coast Guard District
Federal Building
431 Crawford Street
Portsmouth, VA 23704-5004

Dear Mr. Gregory:

As you are aware, the Federal Highway Administration (FHWA) and the Virginia Department of Transportation (VDOT) have initiated the Interstate 64 / High Rise Bridge Corridor Study to evaluate options to improve transportation conditions along the Interstate 64 corridor between the Interstate 464 interchange and the Interstate 664 and Interstate 264 interchanges at Bowers Hill in the City of Chesapeake, Virginia. See attached map for project location. Pursuant to the National Environmental Policy Act of 1969, as amended, and in accordance with FHWA regulations, an Environmental Assessment (EA) is being prepared to analyze the potential social, economic, and environmental effects associated with the proposed project.

Due to the U.S. Coast Guard's (USCG) jurisdiction by law over the navigational waterways and clearances, and in accordance with 40 CFR 1501.6 of the Council on Environmental Quality's Regulations for Implementing the Procedural Provisions of the National Environmental Policy Act and the 2014 Memorandum of Agreement between FHWA and USCG, FHWA requests your participation as a cooperating agency in the development of the EA.

As a cooperating agency, FHWA can better ensure that any concerns the USCG may have are taken into consideration early on in the study. Through your role in the Navigation Evaluation, your agency already has demonstrated a cooperative approach. Your acceptance of this invitation will further document your assistance to FHWA and VDOT and be consistent with the January 2014 Memorandum of Agreement between our agencies.

We appreciate any technical assistance and comment s you could provide in the preparation of the EA. Throughout the development of the EA, we would encourage your agency to express your

views on subjects within your area of jurisdiction and provide you with a copy of the preliminary EA for your review and comment prior to making the document available to the public.

Thank you for your willingness to provide assistance regarding this project. If you have any questions or would like to discuss in more detail our agencies' respective roles and responsibilities during the preparation of the EA, please contact me at Mack.frost@dot.gov or at (804)775-3352.

Sincerely,

Irene Rico
Division Administrator

5/16/2014

By: Mack Frost
Planning and Environmental Specialist

Enclosures: Project Location Map

Cc: Scott Smizik, VDOT
James Utterback, VDOT
Kashanda Booker, USCG

U.S. Department of Homeland Security
United States Coast Guard

Commander
United States Coast Guard
Fifth Coast Guard District

431 Crawford St
Portsmouth VA 23704-5004
Staff Symbol: (dpb)
Phone: (757) 398-6227
Fax: (757) 398-6334
Email: kashanda.l.booker@uscg.mil

2 JUN 2014

RECEIVED
FEDERAL HIGHWAY ADMINISTRATION
JUN - 9 2014
VIRGINIA DIVISION OFFICE
RICHMOND, VIRGINIA

Mr. Mack Frost
Planning and Environmental Specialist
Federal Highway Administration
PO Box 10249
12400 N. 8th Street, Room 750
Richmond, VA 23240

Dear Mr. Frost:

I am responding to your letter of May 16, 2014 regarding our participation in the development of the National Environmental Protection Act (NEPA) documentation for the proposed Interstate 64/High Rise Bridge Project, located in Chesapeake, VA.

As you know, the Coast Guard is in receipt of the Elizabeth River-Navigation Evaluation prepared in support of the I-64/High Rise Bridge replacement efforts. Along with the forthcoming Coast Guard Bridge Permit application, the Navigation Evaluation will assist in determining the reasonable needs of navigation for the Elizabeth River at the project site. We will agree to be a cooperating agency for this proposed bridge project in accordance with the conditions specified in your letter. As a cooperating agency, we are prepared to work with you on executing and satisfying our responsibilities under NEPA. We expect that all navigational and other concerns will be addressed under appropriate sections of the Environmental Assessment.

Our office looks forward to working with you. Ms. Kashanda Booker has been assigned project manager for this office and she may be contacted at the above-listed address, telephone number and/or e-mail address.

Sincerely,

Waverly W. Gregory, Jr.

WAVERLY W. GREGORY, JR.
Bridge Program Manager
By direction of the Commander
Fifth Coast Guard District

United States Department of the Interior

FISH AND WILDLIFE SERVICE
Ecological Services
6669 Short Lane
Gloucester, Virginia 23061

FEB 04 2013

Greetings:

Due to increases in workload and refinement of our priorities in Virginia, this office will no longer provide individual responses to requests for environmental reviews. However, we want to ensure that U.S. Fish and Wildlife Service trust resources continue to be conserved. When that is not possible, we want to ensure that impacts to these important natural resources are minimized and appropriate permits are applied for and received. We have developed a website, *http://www.fws.gov/northeast/virginiafield/endspecies/Project_Reviews_Introduction.html*, that provides the steps and information necessary to allow landowners, applicants, consultants, agency personnel, and any other individual or entity requiring review/approval of their project to complete a review and come to the appropriate conclusion.

The website will be frequently updated to provide new species/trust resource information and methods to review projects, so refer to the website for each project review to ensure that current information is utilized.

If you have any questions about project reviews or need assistance, please contact Troy Andersen of this office at (804) 693-6694, extension 166, or troy_andersen@fws.gov. For problems with the website, please contact Mike Drummond of this office at mike_drummond@fws.gov.

Sincerely,

Cynthia R Schulz

Cindy Schulz
Supervisor
Virginia Field Office

Nies, Nicholas

From: Smizik, Scott (VDOT) <Scott.Smizik@vdot.virginia.gov>
Sent: Tuesday, September 23, 2014 8:12 AM
To: Nies, Nicholas
Subject: FW: I-64 widening and High Rise Bridge replacement, City of Chesapeake (2013-0971)

Importance: High

From: Holma, Marc (DHR)
Sent: Friday, August 16, 2013 1:22 PM
To: Stuck, Kenneth E. (VDOT)
Subject: I-64 widening and High Rise Bridge replacement, City of Chesapeake (2013-0971)

Ken,

The DHR has received your letter of 1 August 2013 regarding the above referenced project. It is our understanding the VDOT is beginning to study and prepare an Environmental Assessment (EA) for the widening of I-64 for a length of approximately 8 miles between the I-464 interchange and the I-664/I-264 interchange at Bowers Hill. The VDOT anticipates up to three alternatives will be evaluated in the EA.

The undertaking has the potential to affect historic properties listed in or eligible for the National Register of Historic Places. We request that VDOT continue to consult with DHR on this undertaking pursuant to Section 106 of the National Historic Preservation Act and the National Environmental Policy Act, and provide us with a copy of the EA for our review and comment once a draft is available.

Sincerely,

Marc Holma

U.S. DEPARTMENT OF AGRICULTURE
Natural Resources Conservation Service

NRCS-CPA-106
(Rev. 1-91)

FARMLAND CONVERSION IMPACT RATING FOR CORRIDOR TYPE PROJECTS

PART I *(To be completed by Federal Agency)*	3. Date of Land Evaluation Request 8/14/14	4. Sheet 1 of _____
1. Name of Project **I-64 Widening&HighRise Bridge Replacement**	5. Federal Agency Involved **Federal Highway Administration**	
2. Type of Project **Transportation**	6. County and State **City of Chesapeake, Virginia**	
PART II *(To be completed by NRCS)*	1. Date Request Received by NRCS 8-26-13	2. Person Completing Form GREG HAMMER
3. Does the corridor contain prime, unique statewide or local important farmland? (If no, the FPPA does not apply - Do not complete additional parts of this form). YES ☐ NO ☒		4. Acres Irrigated | Average Farm Size
5. Major Crop(s)	6. Farmable Land in Government Jurisdiction Acres: %	7. Amount of Farmland As Defined in FPPA Acres: %
8. Name Of Land Evaluation System Used	9. Name of Local Site Assessment System	10. Date Land Evaluation Returned by NRCS

PART III *(To be completed by Federal Agency)*	Alternative Corridor For Segment _____			
	Corridor A	Corridor B	Corridor C	Corridor D
A. Total Acres To Be Converted Directly				
B. Total Acres To Be Converted Indirectly, Or To Receive Services				
C. Total Acres In Corridor				
PART IV *(To be completed by NRCS) Land Evaluation Information*				
A. Total Acres Prime And Unique Farmland				
B. Total Acres Statewide And Local Important Farmland				
C. Percentage Of Farmland in County Or Local Govt. Unit To Be Converted				
D. Percentage Of Farmland in Govt. Jurisdiction With Same Or Higher Relative Value				
PART V *(To be completed by NRCS) Land Evaluation Information Criterion Relative value of Farmland to Be Serviced or Converted (Scale of 0 - 100 Points)*				

PART VI *(To be completed by Federal Agency) Corridor Assessment Criteria (These criteria are explained in 7 CFR 658.5(c))*	Maximum Points				
1. Area in Nonurban Use	15				
2. Perimeter in Nonurban Use	10				
3. Percent Of Corridor Being Farmed	20				
4. Protection Provided By State And Local Government	20				
5. Size of Present Farm Unit Compared To Average	10				
6. Creation Of Nonfarmable Farmland	25				
7. Availablility Of Farm Support Services	5				
8. On-Farm Investments	20				
9. Effects Of Conversion On Farm Support Services	25				
10. Compatibility With Existing Agricultural Use	10				
TOTAL CORRIDOR ASSESSMENT POINTS	160	0	0	0	0
PART VII *(To be completed by Federal Agency)*					
Relative Value Of Farmland (From Part V)	100	0	0	0	0
Total Corridor Assessment (From Part VI above or a local site assessment)	160	0	0	0	0
TOTAL POINTS *(Total of above 2 lines)*	260	0	0	0	0

1. Corridor Selected:	2. Total Acres of Farmlands to be Converted by Project:	3. Date Of Selection:	4. Was A Local Site Assessment Used? YES ☐ NO ☐

5. Reason For Selection:

Signature of Person Completing this Part: | DATE

NOTE: Complete a form for each segment with more than one Alternate Corridor

the heartbeat of HAMPTON ROADS TPO
TRANSPORTATION PLANNING ORGANIZATION

MOLLY J. WARD, CHAIR · ALAN P. KRASNOFF, VICE CHAIR
DWIGHT L. FARMER, EXECUTIVE DIRECTOR/SECRETARY

RECEIVED
SEP 1 2 2013
ENVIRONMENTAL DIVISION

September 9, 2013

Mr. Scott Smizik
VDOT
1401 East Broad Street
Richmond, VA 23219

RE: I-64 / High Rise Bridge Widening in Chesapeake
THY: 64- Corridor from 464 to Bowers Hill

Dear Mr. Smizik:

Thank you for the opportunity to comment on this important project transmitted via your letter of August 26, 2013. This corridor and the severely congested HRBT are the only two interstate gateways to the bulk of Hampton Roads residences and businesses which lie east of the Intra-Coastal Waterway.

The congestion that slows travel most weekdays along this corridor indicates that additional capacity is needed in this corridor today. According to our *Volumes, Speeds, and Congestion on Major Roadways in Hampton Roads* (document T13-06 on our website, p. 4), based on processing of INRIX data obtained from VDOT for I-64 between GW Hwy and Military Hwy, the average AM peak hour speed WB (toward Va. Beach) is 37 mph and the average PM peak hour speed EB (toward Suffolk) is 49 mph, the former considered "severe" congestion. In addition, according to our *Hampton Roads Regional Freight Study 2012 Update* (document T12-12 on our website, p. 103), congestion in this corridor makes it the second highest source of truck delay in Hampton Roads. Lastly, in addition to low average speeds, travel time reliability is poor in the corridor. According to our *Hampton Roads Regional Travel Time Reliability Study* (document T13-07 on our website, p. 43), based on INRIX data, a driver desiring to travel from Bowers Hill to GW Hwy during the AM or PM peak periods must budget approximately four times the free-flow travel time for this segment in order to arrive on-time with 95% confidence.

Although this corridor is severely congested today, VDOT's new regional model indicates that it will become much worse once tolls are placed on the Midtown and Downtown Tunnels. According to preliminary model runs conducted for our FY13 UPWP task 8.5 "Preparing Corridors for Midtown Tunnel – Downtown Tunnel – MLK Project", tolls at those tunnels will add 35,000 vehicles per day to the High Rise Bridge which, as shown above, is already carrying more vehicles than intended. In addition, according to our *Existing and Future Truck Delay in Hampton Roads* (document T13-08, p. 21), congestion in

this corridor 20 years in the future will potentially make it the third highest source of truck delay in Hampton Roads at that time. Lastly, our *Hampton Roads Congestion Management Process* (document T10-07, p. 89) forecasts 2030 level of service "F" for both directions for this entire corridor.

Finally, although we commend the forward-thinking of your intended investigation of the "replacement" of the existing bridge (built in 1969 according to VDOT data reported in our *Hampton Roads Regional Bridge Study 2012 Update*, document T12-14, p. 74), given—as shown above—that the widening is needed today and that the existing bridge will not reach the age of 75 for another 31 years, we strongly request that you differentiate between the proposed widening and the proposed replacement of the existing bridge while developing construction phasing and cost estimates. Such treatment is intended to make affordable the construction in the near future of a new bridge to provide much needed capacity to reduce today's congestion level, and even higher congestion levels expected from the pending tolls on parallel tunnels in 2014.

Sincerely,

Dwight L. Farmer

Dwight L. Farmer
Executive Director/Secretary

RBC/kg

Copy: James Utterback, VDOT

RECEIVED
SEP 1 2 2013
ENVIRONMENTAL DIVISION

COMMONWEALTH of VIRGINIA

DEPARTMENT OF ENVIRONMENTAL QUALITY
Street address: 629 East Main Street, Richmond, Virginia 23219
Mailing address: P.O. Box 1105, Richmond, Virginia 23218
TDD (804) 698-4021
www.deq.virginia.gov

Douglas W. Domenech
Secretary of Natural Resources

David K. Paylor
Director

(804) 698-4000
1-800-592-5482

September 9, 2013

Mr. Scott Smizik, AICP
VDOT Project Manager
Virginia Department of Transportation
1401 East Broad Street
Richmond, Virginia 23219

RE: Interstate 64 Widening and High-Rise Bridge Replacement Location Study, City of Chesapeake (VDOT Project # 0064-131-783, P101; UPC: 104366)

Dear Mr. Smizik:

Thank you for your August 26, 2013 letter (received August 28) announcing the intent of the Department of Transportation (VDOT) to prepare an Environmental Assessment for the above-listed project and inviting our comments and consultation on the project.

PROJECT DESCRIPTION

According to your letter and enclosed map, VDOT has begun a study to develop alternatives to address deficiencies and capacity limitations in the Interstate Route 64 corridor between I-464 and I-264/I-664 in the City of Chesapeake. The enclosed map indicates that a stretch of approximately eight miles, including a high-rise bridge over the Elizabeth River, is involved. Your letter suggests that widening of I-64 is contemplated (page 1).

ENVIRONMENTAL REVIEW UNDER NATIONAL ENVIRONMENTAL POLICY ACT

The role of the Virginia Department of Environmental Quality (DEQ) in relation to environmental impact reviews is as follows. DEQ's Office of Environmental Impact Review (OEIR) coordinates Virginia's review of environmental documents (Environmental Assessment or Environmental Impact Statement) prepared pursuant to the National Environmental Policy Act and comment to the appropriate federal agency (in this case it would be the Federal Highway Administration) on behalf of the Commonwealth.

As you know, the National Environmental Policy Act (PL 91-190, 1969) (NEPA) and its implementing regulations (Title 40, *Code of Federal Regulations*, Parts 1500-1508) require draft and final Environmental Impact Statements (EISs) for federally funded undertakings which will or may give rise to significant impacts upon the human environment. EISs carry more stringent public participation requirements than Environmental Assessments (EAs) and provide more time and detail for comments and public decision-making. Therefore, we refer to "NEPA document" in the remainder of this letter in the event that an EIS may be required for this highway project.

REVIEW PURSUANT TO THE COASTAL ZONE MANAGEMENT ACT

Pursuant to the *Coastal Zone Management Act of 1972*, as amended (15 CFR Part 930, Subpart D) activities requiring a federal permit, license, or approval that can have reasonably foreseeable effects on Virginia's coastal uses or resources must be conducted in a manner which is consistent with the Virginia Coastal Zone Management Program (VCP) (previously called the Virginia Coastal Resources Management Program). The VCP is comprised of a network of programs administered by several agencies.

The DEQ is responsible for coordinating Virginia's review of Federal Consistency Certifications (FCC) and responding to appropriate officials on behalf of the Commonwealth. For consistency activities requiring a license, permit, or approval, DEQ-OEIR must be provided with a federal consistency certification (FCC) which involves an analysis of the activities in light of the enforceable policies of the VCP (first enclosure), and a commitment to comply with the enforceable policies. In addition, we invite your attention to the advisory policies of the VCP (second enclosure).

If an FCC is included as part of a NEPA document, DEQ will conduct the review of both the NEPA and CZMA requirements concurrently. *Federal Consistency Regulations* (15 CFR Part 930, § 930.62(a)) allow up to six months for review of an FCC. However, federal consistency reviews which are submitted concurrently with the NEPA document are typically completed in approximately 60 days provided no significant issues are identified. We recommend this approach to save time and extra effort for the project proponent as well as for the Commonwealth. Sections 930.57 and 930.58 of the *Federal Consistency Regulations* (15 CFR 930) and Virginia's *Federal Consistency Information Package* available on DEQ's web site at http://www.deq.virginia.gov/Programs/EnvironmentalImpactReview/FederalConsistencyReviews.aspx give content requirements for a FCC.

PROJECT SCOPING AND AGENCY INVOLVEMENT

While this Office does not participate in scoping efforts beyond the advice given herein, other agencies are free to provide scoping comments concerning the preparation of the NEPA document. Accordingly, we are sharing our response to the letter with selected state and local Virginia agencies which have responsibilities bearing on the project you have described. These are likely to include the following:

Department of Environmental Quality
Department of Game and Inland Fisheries

Department of Conservation and Recreation
Department of Agriculture and Consumer Services
Department of Health
Virginia Marine Resources Commission
Department of Housing and Community Development
Department of Historic Resources
Department of Mines, Minerals, and Energy
Department of Forestry
Hampton Roads Planning District Commission
City of Chesapeake.

The Department of Historic Resources, also known as the State Historic Preservation Office (SHPO), is the state agency responsible for consultation and expertise relating to the National Historic Preservation Act, section 106, and its implementing regulations at Title 36, *Code of Federal Regulations*, Part 800. We recommend that you contact the Department of Historic Resources (Roger Kirchen, telephone (804) 482-6091 or e-mail roger.kirchen@dhr.virginia.gov) to request consultation in this regard and to ensure that VDOT meets the requirements of section 106 concerning the proposed project.

In order to ensure an effective coordinated review of environmental documents, OEIR typically require 18 copies. The submission may include 3 hard copies and 15 CDs or 3 hard copies and an electronic copy available for download at a website, file transfer protocol site or the VITAShare file transfer system (*https://vitashare.vita.virginia.gov*). We recommend that project details unfamiliar to people outside VDOT be adequately described in the NEPA document.

INFORMATION ON WASTE MATERIALS and OTHER ISSUES

DEQ and other agencies maintain databases on hazardous materials. We are enclosing a copy of Appendix 10 (see below) of DEQ's most recent Environmental Impact Report Procedure Manual (dated July 2012) that lists databases and indicates their uses and contents. Questions on waste management may be directed to DEQ's Division of Land Protection and Revitalization (Steve Coe at 804-698-4029 or *Stephen.Coe@deq.virginia.gov*).

- DEQ Online Database: Virginia Environmental Geographic Information Systems

  Information on Permitted Solid Waste Management Facilities, Impaired Waters, Petroleum Releases, Registered Petroleum Facilities, Permitted Discharge (Virginia Pollution Discharge Elimination System Permits) Facilities, Resource Conservation and Recovery Act (RCRA) Sites, Water Monitoring Stations, National Wetlands Inventory
  - www.deq.virginia.gov/ConnectWithDEQ/VEGIS.aspx

- DEQ Permit Expert

  Helps determine if a DEQ permit is necessary
  - www.deq.virginia.gov/permitexpert/

- DHR Data Sharing System

  Survey records in the DHR inventory
  - www.dhr.virginia.gov/archives/data_sharing_sys.htm

- DCR Natural Heritage Search

  Produces lists of resources that occur in specific counties, watersheds or physiographic regions
  - www.dcr.virginia.gov/natural_heritage/dbsearchtool.shtml

- DGIF Fish and Wildlife Information Service

  Information about Virginia's Wildlife resources
  - http://vafwis.org/fwis/

- Environmental Protection Agency (EPA) Comprehensive Environmental Response, Compensation, and Liability Information System (CERCLIS) Database: Superfund Information Systems

  Information on hazardous waste sites, potentially hazardous waste sites and remedial activities across the nation, including sites that are on the National Priorities List (NPL) or being considered for the NPL
  - www.epa.gov/superfund/sites/cursites/index.htm

- EPA RCRAInfo Search

  Information on hazardous waste facilities
- www.epa.gov/enviro/facts/rcrainfo/search.html
  EPA Envirofacts Database

  EPA Environmental Information, including EPA-Regulated Facilities and Toxics Release Inventory Reports
  - www.epa.gov/enviro/index.html

- EPA NEPAssist Database

  Facilitates the environmental review process and project planning
  - http://nepassisttool.epa.gov/nepassist/entry.aspx

If you have questions about the environmental review process, please feel free to contact me (telephone (804) 698-4325 or e-mail ellie.irons@deq.virginia.gov) or Charles Ellis (telephone (804) 698-4195 or e-mail charles.ellis@deq.virginia.gov).

I hope the foregoing information is helpful to you.

Sincerely,

Ellie L. Irons, Program Manager
Environmental Impact Review

ec: Cindy Keltner, DEQ-TRO
Kotur S. Narasimhan, DEQ-DAPC
G. Stephen Coe, DEQ-DLPR
Roberta Rhur, DCR
Larry Gavan, DEQ-E&S
Holly Sepety, DEQ-SWM
Daniel Moore, DEQ-CB
Keith R. Tignor, VDACS
Amy M. Ewing, DGIF
Tony Watkinson, VMRC
Barry Matthews, VDH
Roger W. Kirchen, DHR
David Spears, DMME
Gregory Evans, DOF
William Shelton, DHCD
Benjamin McFarlane, HRPDC
Brent L. Nielson, City of Chesapeake

COMMONWEALTH of VIRGINIA

DEPARTMENT OF ENVIRONMENTAL QUALITY

Street address: 629 East Main Street, Richmond, Virginia 23219
Mailing address: P.O. Box 1105, Richmond, Virginia 23218
TDD (804) 698-4021
www.deq.virginia.gov

Douglas W. Domenech
Secretary of Natural Resources

David K. Paylor
Director

(804) 698-4000
1-800-592-5482

Attachment 1

Enforceable Regulatory Programs comprising Virginia's Coastal Zone Management Program (VCP)

a. Fisheries Management - The program stresses the conservation and enhancement of finfish and shellfish resources and the promotion of commercial and recreational fisheries to maximize food production and recreational opportunities. This program is administered by the Marine Resources Commission (VMRC); Virginia Code 28.2-200 to 28.2-713 and the Department of Game and Inland Fisheries (DGIF); Virginia Code 29.1-100 to 29.1-570.

The State Tributyltin (TBT) Regulatory Program has been added to the Fisheries Management program. The General Assembly amended the Virginia Pesticide Use and Application Act as it related to the possession, sale, or use of marine antifoulant paints containing TBT. The use of TBT in boat paint constitutes a serious threat to important marine animal species. The TBT program monitors boating activities and boat painting activities to ensure compliance with TBT regulations promulgated pursuant to the amendment. The VMRC, DGIF, and Virginia Department of Agriculture Consumer Services (VDACS) share enforcement responsibilities; Virginia Code 3.2-3904 and 3.2-3935 to 3.2-3937.

b. Subaqueous Lands Management - The management program for subaqueous lands establishes conditions for granting or denying permits to use state-owned bottomlands based on considerations of potential effects on marine and fisheries resources, tidal wetlands, adjacent or nearby properties, anticipated public and private benefits, and water quality standards established by the Department of Environmental Quality (DEQ). The program is administered by the Marine Resources Commission; Virginia Code 28.2-1200 to 28.2-1213.

c. Wetlands Management - The purpose of the wetlands management program is to preserve wetlands, prevent their despoliation, and accommodate economic development in a manner consistent with wetlands preservation.

(1) The tidal wetlands program is administered by the Marine Resources Commission; Virginia Code 28.2-1301 through 28.2-1320.

(2) The Virginia Water Protection Permit program administered by DEQ includes protection of wetlands --both tidal and non-tidal; Virginia Code §62.1-44.15:5 and Water Quality Certification pursuant to Section 401 of the Clean Water Act.

d. Dunes Management - Dune protection is carried out pursuant to The Coastal Primary Sand Dune Protection Act and is intended to prevent destruction or alteration of primary dunes. This program is administered by the Marine Resources Commission; Virginia Code 28.2-1400 through 28.2-1420.

e. Non-point Source Pollution Control – (1) Virginia's Erosion and Sediment Control Law requires soil-disturbing projects to be designed to reduce soil erosion and to decrease inputs of chemical nutrients and sediments to the Chesapeake Bay, its tributaries, and other rivers and waters of the Commonwealth. This program is administered by the Department of Conservation and Recreation; Virginia Code 10.1-560 et.seq.).

(2) Coastal Lands Management is a state-local cooperative program administered by the DCR's Division of Chesapeake Bay Local Assistance and 84 localities in Tidewater (see i) Virginia; Virginia Code §10.1-2100 –10.1-2114 and 9 VAC10-20 et seq.

f. Point Source Pollution Control - The point source program is administered by the State Water Control Board (DEQ) pursuant to Virginia Code 62.1-44.15. Point source pollution control is accomplished through the implementation of:

(1) the National Pollutant Discharge Elimination System (NPDES) permit program established pursuant to Section 402 of the federal Clean Water Act and administered in Virginia as the Virginia Pollutant Discharge Elimination System (VPDES) permit program.

(2) The Virginia Water Protection Permit (VWPP) program administered by DEQ; Virginia Code §62.1-44.15:5 and Water Quality Certification pursuant to Section 401 of the Clean Water Act.

g. Shoreline Sanitation - The purpose of this program is to regulate the installation of septic tanks, set standards concerning soil types suitable for septic tanks, and specify minimum distances that tanks must be placed away from streams, rivers, and other waters of the Commonwealth. This program is administered by the Department of Health (Virginia Code 32.1-164 through 32.1-165).

h. Air Pollution Control - The program implements the federal Clean Air Act to provide a legally enforceable State Implementation Plan for the attainment and maintenance of the National Ambient Air Quality Standards. This program is administered by the State Air Pollution Control Board (Virginia Code 10-1.1300 through §10.1-1320).

(i) Coastal Lands Management is a state-local cooperative program administered by the DCR's Division of Chesapeake Bay Local Assistance and 84 localities in Tidewater, Virginia established pursuant to the Chesapeake Bay Preservation Act; Virginia Code §10.1-2100 –10.1-2114 and Chesapeake Bay Preservation Area Designation and Management Regulations; Virginia Administrative Code 9 VAC10-20 et seq.

COMMONWEALTH of VIRGINIA

DEPARTMENT OF ENVIRONMENTAL QUALITY

Street address: 629 East Main Street, Richmond, Virginia 23219
Mailing address: P.O. Box 1105, Richmond, Virginia 23218
TDD (804) 698-4021
www.deq.virginia.gov

Douglas W. Domenech
Secretary of Natural Resources

David K. Paylor
Director

(804) 698-4000
1-800-592-5482

Attachment 2

Advisory Policies for Geographic Areas of Particular Concern

a. Coastal Natural Resource Areas - These areas are vital to estuarine and marine ecosystems and/or are of great importance to areas immediately inland of the shoreline. Such areas receive special attention from the Commonwealth because of their conservation, recreational, ecological, and aesthetic values. These areas are worthy of special consideration in any planning or resources management process and include the following resources:

   a) Wetlands
   b) Aquatic Spawning, Nursery, and Feeding Grounds
   c) Coastal Primary Sand Dunes
   d) Barrier Islands
   e) Significant Wildlife Habitat Areas
   f) Public Recreation Areas
   g) Sand and Gravel Resources
   h) Underwater Historic Sites.

b. Coastal Natural Hazard Areas - This policy covers areas vulnerable to continuing and severe erosion and areas susceptible to potential damage from wind, tidal, and storm related events including flooding. New buildings and other structures should be designed and sited to minimize the potential for property damage due to storms or shoreline erosion. The areas of concern are as follows:

   i) Highly Erodible Areas
   ii) Coastal High Hazard Areas, including flood plains.

c. Waterfront Development Areas - These areas are vital to the Commonwealth because of the limited number of areas suitable for waterfront activities. The areas of concern are as follows:

   i) Commercial Ports
   ii) Commercial Fishing Piers
   iii) Community Waterfronts

Although the management of such areas is the responsibility of local government and some regional authorities, designation of these areas as Waterfront Development Areas of Particular Concern (APC) under the VCRMP is encouraged.

Designation will allow the use of federal CZMA funds to be used to assist planning for such areas and the implementation of such plans. The VCRMP recognizes two broad classes of priority uses for waterfront development APC:

i) water access dependent activities;
ii) activities significantly enhanced by the waterfront location and complementary to other existing and/or planned activities in a given waterfront area.

Advisory Policies for Shorefront Access Planning and Protection

a. Virginia Public Beaches - Approximately 25 miles of public beaches are located in the cities, counties, and towns of Virginia exclusive of public beaches on state and federal land. These public shoreline areas will be maintained to allow public access to recreational resources.

b. Virginia Outdoors Plan - Planning for coastal access is provided by the Department of Conservation and Recreation in cooperation with other state and local government agencies. The Virginia Outdoors Plan (VOP), which is published by the Department, identifies recreational facilities in the Commonwealth that provide recreational access. The VOP also serves to identify future needs of the Commonwealth in relation to the provision of recreational opportunities and shoreline access. Prior to initiating any project, consideration should be given to the proximity of the project site to recreational resources identified in the VOP.

c. Parks, Natural Areas, and Wildlife Management Areas - Parks, Wildlife Management Areas, and Natural Areas are provided for the recreational pleasure of the citizens of the Commonwealth and the nation by local, state, and federal agencies. The recreational values of these areas should be protected and maintained.

d. Waterfront Recreational Land Acquisition - It is the policy of the Commonwealth to protect areas, properties, lands, or any estate or interest therein, of scenic beauty, recreational utility, historical interest, or unusual features which may be acquired, preserved, and maintained for the citizens of the Commonwealth.

e. Waterfront Recreational Facilities - This policy applies to the provision of boat ramps, public landings, and bridges which provide water access to the citizens of the Commonwealth. These facilities shall be designed, constructed, and maintained to provide points of water access when and where practicable.

f. Waterfront Historic Properties - The Commonwealth has a long history of settlement and development, and much of that history has involved both shorelines and near-shore areas. The protection and preservation of historic shorefront properties is primarily the responsibility of the Department of Historic Resources. Buildings, structures, and sites of historical, architectural, and/or archaeological interest are significant resources for the citizens of the Commonwealth. It is the policy of the Commonwealth and the VCRMP to enhance the protection of buildings, structures, and sites of historical, architectural, and archaeological significance from damage or destruction when practicable.

Carl E. Garrison III
State Forester

COMMONWEALTH of VIRGINIA

DEPARTMENT OF FORESTRY
900 Natural Resources Drive, Suite 800
Charlottesville VA 22903
434.977.6555 ~ Fax: 434.296.2369
www.dof.virginia.gov

September 18, 2013

TO: Scott Smizik, VDOT Project Manager
FROM: Greg Evans, VDOF
SUBJECT: Interstate 64 Widening and High-Rise Bridge Replacement Location Study, City of Chesapeake
VDOT Project Number 0064-131-783, P101; UPC: 104366

I am writing in response to your August 26, 2013 letter to Mr. Carl Garrison, the Virginia State Forester inviting the Department of Forestry (DOF) to provide comments and identify environmental resources in and around the above named project for a scoping study. The Department of Forestry appreciates the opportunity to work with the Virginia Department of Transportation (VDOT) and take advantage of opportunities to use planning decisions and information in the NEPA process to ensure environmental concerns are addressed. The Department of Forestry is charged with conserving the Commonwealth's forest resources for the use and enjoyment of current and future generations of Virginia citizens and its comments reflect that charge.

It is our understanding from your letter to Mr. Garrison that the purpose of the current study is to develop alternative solutions to address insufficient transportation capacity and correct roadway and bridge deficiencies throughout the project corridor. With that as the context, DOF supports as a build alternative, widening the existing highway corridor rather than creating a new one. Such an action will minimize adverse impacts on the area's natural resources.

DOF notes that while it was prepared for a different but adjacent I-64 study area, some of VDOT's natural resources findings in its 2012 *Interstate 64 Peninsula Study Draft Environmental Impact Statement Natural Resources Technical Memorandum* covering the portions of I-64 from Richmond south to Hampton Roads are applicable as well to the I-64 Widening and High-Rise Bridge Replacement Location study area. That memorandum summarized the natural resources found in the Coastal Plain physiographic province as follows: "[a] variety of upland forest communities and diverse tidal and freshwater wetlands and stream systems….The upland forests that originally covered much of the Virginia Coastal Plain have been extensively cleared or altered, making it difficult to determine which species and natural

communities were once naturally prevalent. Much of the contemporary forest consists of successional or silvicultural stands of loblolly pine (*Pinus taeda*) and secondary pine-hardwood forests that have developed after repeated timbering or agricultural abandonment. The most mature remnant stands on mesic uplands are typically characterized by associations of American beech (*Fagus grandifolia*), several oaks (*Quercus* spp.), and American holly (*Ilex opaca var. opaca*)…."

The City of Chesapeake's 2026 Comprehensive Plan further characterizes the natural resources in the area as follows: "The City is located in the northern extent of what is known as the Southeastern Evergreen Forest Region (DCR, Natural Heritage, 1998), which stretches from southeastern Virginia along the Gulf Coast to eastern Texas. According to the Natural Heritage Division of the Virginia Department of Conservation and Recreation, this ecosystem is characterized by pine and pine-hardwood communities, along with large areas of swamp land. Examples of typical vegetation found in such areas include Pond Pine, Atlantic White Cedar, Red Maple, Loblolly Pine and Black Needle Rush Marsh" (Forward Chesapeake 2026 Comprehensive Plan, pp. 117-118).

Under the heading "Potential Impacts and Mitigation Measures" and subheading "Build Alternatives" the 2012 VDOT DEIS technical memorandum completed for the other I-64 segments from Richmond to Norfolk also concluded that "[a]ll of the Build Alternatives have the potential to impact terrestrial and aquatic habitat or species along the study area corridor. Extensive coordination with the different agencies should continue throughout all stages of project development to reduce potential impacts to these resources. In addition, avoidance and minimization of potential impacts to the natural environment and wildlife should be considered throughout the design and construction phases of the project. Permitting of the project would also address avoidance, minimization, and compensatory mitigation measures, as needed."

DOF notes that all build alternatives that may be considered for the 64 Widening and High-Rise Bridge Replacement Location Study segment of I-64 will also have the same potential to impact terrestrial and aquatic habitat or species along it's study area corridor and recommends that VDOT adopt the same coordination, design and construction recommendations as stated above for this I-64 segment too.

Aerial photos of the study area for the 64 Widening and High-Rise Bridge Replacement project show it to be urbanized and highly developed. There are however, two significant forested areas DOF recommends be avoided as much as possible in the design of the project. One is located on the border of City of Portsmouth and City of Chesapeake land west of Cavalier Blvd. and stretches to the intersection of I-664, I-264 and I-64. That forested area also borders two lakes (Lake Cavalier and Lake Forest) and provides some recreational benefits. A private canoe launch site is identified there (Forward Chesapeake 2026 Comprehensive Plan, Map 19 Public Waterfront Access, p. 146). The second large forested area is located at the eastern end of the project study area in the vicinity of the High Rise Bridge. That forest also provides recreational benefits and is identified as a city neighborhood park with potential water access (Forward Chesapeake 2026 Comprehensive Plan, Map 20 Potential Water Access Sites, p. 148).

In addition to the identified recreational services, it can also be presumed that both of these forests provide water quality benefits due to their proximity to water bodies. The WIP II guidance offered to localities for addressing TMDL requirements describes forestland as the best land use for meeting water quality objectives. Furthermore, the City of Chesapeake's comprehensive plan cites as a planning strategy incorporating consideration of adjacent or nearby documented natural areas or environmentally sensitive areas into site plan assessments with the objective being to minimize impacts to these areas (Forward Chesapeake 2026 Comprehensive Plan, p. 148).

DOF notes too, that the project's study area is within a Chesapeake Bay preservation area (Forward Chesapeake 2026 Comprehensive Plan, Map 15 Chesapeake Bay Preservation Areas, p. 131) and that most of the land in the study area is classified as upland (Forward Chesapeake 2026 Comprehensive Plan, Map 18 National Wetland Inventory, p. 141). As such, the forests DOF has identified for avoidance mitigation are upland forests. DOF understands that VDOT is exempt from the Chesapeake Bay Preservation Act in this instance, but notes that the exemption is qualified by the road alignment and design being optimized "consistent with all applicable requirements, to prevent or otherwise minimize the encroachment in the RPA and to minimize the adverse effects on water quality" (Chesapeake Bay Preservation Act, Sec. 23-13. Exemptions (a)(1) a. Page 23-17). The location of the two forested areas DOF has identified for avoidance mitigation are therefore also located in a sensitive environmental zone in addition to being important for recreational and water quality management purposes. Section 6001 of SAFETEA-LU requires statewide long-range plans to discuss environmental mitigation opportunities and specifically references upland forests as a land use for which mitigation plans should be developed. FHWA policy guidance endorses an "ecosystem approach" as a framework through which VDOT can meet the Section 6001 requirements.

This concludes our comments. Please advise if you require any additional information or would like to discuss these recommendations.

Greg Evans
Voluntary Mitigation Program Manager
Forestland Conservation Division
Virginia Department of Forestry
900 Natural Resources Drive, Suite 800
Charlottesville, VA 22903
434-220-9020

M E M O R A N D U M

DATE: September 20, 2013

TO: Scott Smizik, VDOT

FROM: Alli Baird, DCR-DNH

SUBJECT: Due September 25, 2013
0064-131-783, P101, Interstate 64 Widening and High Rise Bridge Replacement Study

The Department of Conservation and Recreation (DCR) has searched its Biotics Data System for occurrences of natural heritage resources from the area outlined on the submitted map. Natural heritage resources are defined as the habitat of rare, threatened, or endangered plant and animal species, unique or exemplary natural communities, and significant geologic formations.

According to the information currently in our files, the Great Dismal Swamp Conservation Site is located in the project vicinity. Conservation sites are tools for representing key areas of the landscape that warrant further review for possible conservation action because of the natural heritage resources and habitat they support. Conservation sites are polygons built around one or more rare plant, animal, or natural community designed to include the element and, where possible, its associated habitat, and buffer or other adjacent land thought necessary for the element's conservation. Conservation sites are given a biodiversity significance ranking based on the rarity, quality, and number of element occurrences they contain; on a scale of 1-5, 1 being most significant. Great Dismal Swamp Conservation Site has been given a biodiversity significance ranking of B2, which represents a site of very high significance. The natural heritage resource of concern at this site is:

Sorex longirostris fisheri	Dismal Swamp southeastern shrew	G5T4/S2/NL/LT

The Dismal Swamp southeastern shrew occurs from southeastern Virginia to southeastern North Carolina along the outer coastal plain (U.S. Fish and Wildlife Service, 1998). They occupy a wide variety of habitats, including recently clearcut and regenerating forests, young pine plantations, grassy and brushy roadsides, young forests with shrubs and saplings, and mature pine and deciduous forests. Early successional stages with dense understories support the largest numbers of Dismal Swamp southeastern shrews, but mature pine plantations and mature second growth hardwood forests can also have significant numbers, particularly if there is a dense understory. Despite the lower densities in mature forests, these habitats are likely to be important to the long-term survival of Dismal Swamp southeastern shrew populations (U.S. Fish and Wildlife Service, 1998).

Threats to the Dismal Swamp southeastern shrew include draining and drying of its preferred habitat which allows the more upland *Sorex longirostris longirostris* to invade and compete against it (Rose and Padgett, 1991). Please note that this species is currently classified as threatened by the Virginia Department of Game and Inland Fisheries (VDGIF).

Due to the potential for this site to support populations of Dismal Swamp southeastern shrew, DCR recommends a habitat assessment for the resource in a 0.5 mile section from 0.25 mile north to 0.25 mile south of the junction of I-64 and US Rt. 13/460 and in the powerline and adjacent wetlands approximately

one mile to the west.. With the survey results we can more accurately evaluate potential impacts to natural heritage resources and offer specific protection recommendations for minimizing impacts to the documented resources. Due to the legal status of Dismal Swamp southeastern shrew, DCR also recommends coordination with Virginia's regulatory authority for the management and protection of this species, the VDGIF, to ensure compliance with the Virginia Endangered Species Act **(**VA ST §§ 29.1-563 – 570).

DCR-Division of Natural Heritage biologists are qualified and available to conduct inventories for rare, threatened, and endangered species. Please contact J. Christopher Ludwig, Natural Heritage Inventory Manager, at chris.ludwig@dcr.virginia.gov or 804-371-6206 to discuss arrangements for field work.

There are no State Natural Area Preserves under DCR's jurisdiction in the project vicinity.

Under a Memorandum of Agreement established between the Virginia Department of Agriculture and Consumer Services (VDACS) and the DCR, DCR represents VDACS in comments regarding potential impacts on state-listed threatened and endangered plant and insect species. The current activity will not affect any documented state-listed plants or insects.

New and updated information is continually added to Biotics. Please contact DCR for an update on this natural heritage information if a significant amount of time passes before it is utilized.

All VDOT projects on state-owned lands must comply with the Virginia Erosion & Sediment Control (ESC) Law and Regulations, the Virginia Stormwater Management (SWM) Law and Regulations, the most current version of the DCR approved VDOT Annual ESC and SWM Specifications and Standards, and the project-specific ESC and SWM plans. [Reference: VESCL §10.1-560, §10.1-564; VESCR §4VAC50-30 et al; VSWML §10.1-603 et al; VSWMR §4VAC-3-20 et al].

The Virginia Department of Game and Inland Fisheries (VDGIF) maintains a database of wildlife locations, including threatened and endangered species, trout streams, and anadromous fish waters, that may contain information not documented in this letter. Their database may be accessed from http://vafwis.org/fwis, or contact Gladys Cason (804-367-0909 or Gladys.Cason@dgif.virginia.gov). This project is located within 2 miles of a documented occurrence of a state listed animal. Therefore, DCR recommends coordination with VDGIF, Virginia's regulatory authority for the management and protection of this species to ensure compliance with the Virginia Endangered Species Act **(**VA ST §§ 29.1-563 – 570).

Thank you for the opportunity to comment on this project.

Cc: Amy Ewing, VDGIF

Literature Cited

Rose, R.K. and T.M. Padgett. 1991. Southeastern shrew. In Virginia's Endangered Species: Proceedings of a Symposium. K. Terwilliger ed. The McDonald and Woodward Publishing Company, Blacksburg, Virginia. pp. 562-564.

U.S. Fish and Wildlife Service. 1998. Endangered and threatened wildlife and plants; proposed rule to delist the Dismal Swamp southeastern shrew (*Sorex longirostris fisheri*). Federal Register 63 (203) 56128-56134.

COMMONWEALTH of VIRGINIA

DEPARTMENT OF ENVIRONMENTAL QUALITY
Street address: 629 East Main Street, Richmond, Virginia 23219
Mailing address: P.O. Box 1105, Richmond, Virginia 23218
TDD (804) 698-4021
www.deq.virginia.gov

Douglas W. Domenech
Secretary of Natural Resources

David K. Paylor
Director

(804) 698-4000
1-800-592-5482

September 24, 2013

Mr. Scott Smizik
VDOT Charge #UPC 104366
Scoping Request – I-64 Chesapeake

Dear Mr. Smizik:

On August 28, 2013, the Department of Environmental Quality received the scoping request letter regarding the proposed project to widen Interstate 64 between Interstate 464 and Interstate 264/Interstate 664 in the City of Chesapeake. DEQ's Division of Land Protection and Revitalization (DLPR) staff has reviewed your email and submittal and has the following comments concerning the waste issues associated with this project:

Neither solid nor hazardous waste issues were addressed in the submittal. The project scope: correct roadway and bridge deficiencies in the I-64 corridor between I-464 and I-264/I-664 interchanges. The Waste Division staff conducted a cursory review of its data files to identify waste sites that could impact or be impacted by the proposed construction.

When the environmental impact report is written or compiled, it should include an environmental investigation on and near the property to identify any hazardous waste sites or issues. The report author should analyze the data in the web-based Waste Division databases to determine if the project would affect or be affected by any sites identified in the databases. These are the CERCLA Facilities and Hazardous Waste Facilities databases.

CERCLA Facilities Database
A list of active and archived CERCLA (EPA Superfund Program) sites.

Hazardous Waste Facilities Database
A list of hazardous waste generators, hazardous waste transporters, and hazardous waste storage and disposal facilities. Data for the CERCLA Facilities and Hazardous Waste Facilities databases are periodically downloaded by the Waste Division from U.S. EPA's website.

Accessing the DEQ Databases:
The report author should access this information on the DEQ website at http://www.deq.virginia.gov/Programs/LandProtectionRevitalization/ReportsPublications/OriginalReports.aspx. Scroll down to the databases which are listed under Real Estate Search Information heading.

The ***Superfund information*** will be listed by clicking on the Search EPA's CERCLIS database tab and opening the file. Click on the locality box, click on sort, and then click on Datasheet View. Scroll to the locality of interest. ***A quick search by zip code 23320 by DEQ Staff showed no Cerclis sites in close proximity to the project corridor.***

The ***hazardous waste*** information can be accessed by clicking on the Hazardous Waste Facility tab. Go to the Geography Search section and fill in the name of the city or county and VA in the state block, and hit enter. The hazardous waste facilities in the locality will be listed. ***A quick search by DEQ Staff showed no RCRA sites in zip code 23220 in close proximity to the project corridor.***

This database search will include most waste-related site information for each locality. In many cases, especially when the project is located in an urban area, the database output for that locality will be extensive.

DEQ's Virginia Geographical Information Systems (VEGIS) database can be accessed at the following web address: http://www.deq.virginia.gov/ConnectWithDEQ/VEGIS.aspx. Through VEGIS's search options, you can identify by address (zip code) FUD sites, VRP sites, and Petroleum Release sites in the area of the proposed project. ***A quick search by DEQ Staff did not identify any solid waste sites (SWs), formerly used defense sites (FUDS), or voluntary remediation project sites (VRPs) in close proximity to the project corridor. One petroleum release site was identified in close proximity to the project corridor:***

> ID# 20125033 – Woodfin Watchcard Site #914, 3741 South Military Highway, Chesapeake, VA 23320. Event Date: 11/1/2011. Status: Closed.
>
> Please note that the DEQ's petroleum contamination (PC) case files may identify petroleum releases that should be evaluated by the project engineer or manager to establish the exact location of the release and the nature and extent of the petroleum release and the potential to impact the proposed project. The project engineer should contact the DEQ's Tidewater Regional Office at 757-518-2000 (Tank Program) for further information and the administrative records of the PC cases which are determined to be in close proximity to the proposed project.

GENERAL COMMENTS:

Soil, Sediment, and Waste Management

Any soil that is suspected of contamination or wastes that are generated must be tested and disposed of in accordance with applicable Federal, State, and local laws and regulations. Some of the applicable state laws and regulations are: Virginia Waste Management Act, Code of Virginia Section 10.1-1400 *et seq.*; Virginia Hazardous Waste Management Regulations (VHWMR) (9VAC 20-60); Virginia Solid Waste Management Regulations (VSWMR) (9VAC 20-81); Virginia Regulations for the Transportation of Hazardous Materials (9VAC 20-110). Some of the applicable Federal laws and regulations are: the Resource Conservation and Recovery Act (RCRA), 42 U.S.C. Section 6901 *et seq.*, and the applicable regulations contained in Title 40 of the Code of Federal Regulations; and the U.S. Department of Transportation Rules for Transportation of Hazardous Materials, 49 CFR Part 107.

Asbestos and/or Lead-based Paint

Also, all structures being demolished/renovated/ removed should be checked for asbestos-containing materials (ACM) and lead-based paint (LBP) prior to demolition. If ACM or LBP are found, in addition to the federal waste-related regulations mentioned above, State regulations 9VAC 20-80-640 for ACM and 9VAC 20-60-261 for LBP must be followed. Questions may be directed to Ms. Lisa Silvia in DEQ's Tidewater Regional office, 757-518-2175.

Pollution Prevention – Reuse - Recycling

Please note that DEQ encourages all construction projects and facilities to implement pollution prevention principles, including the reduction, reuse, and recycling of all solid wastes generated. All generation of hazardous wastes should be minimized and handled appropriately.

If you have any questions or need further information, please contact Steve Coe at (804) 698-4029.

RECEIVED
OCT 0 8 2013
ENVIRONMENTAL DIVISION

COMMONWEALTH of VIRGINIA

Matthew J. Lohr
Commissioner

Department of Agriculture and Consumer Services
PO Box 1163, Richmond, Virginia 23218
Phone: 804/786-3501 • fax: 804/371-2945 • Hearing Impaired; 800/828-1120
www.vdacs.virginia.gov

September 26, 2013

Mr. Scott Smizik
VDOT
1401 East Broad Street
Richmond, VA 23219

Project: Interstate 64 Widening and High Rise Bridge Replacement Location Study
City of Chesapeake
VDOT Project Number 0064-131-783, P101; UPC: 104366

Dear Mr. Smizik:

This is in response to your letter dated August 26, 2013, concerning the Virginia Department of Transportation (VDOT) and Federal Highway Administration (FHWA) initiated study to widen Interstate 64 between I-464 and I-264/I-664 in the City of Chesapeake.

From your letter, I understand that at this early stage of study, your efforts are focused on identifying transportation needs, environmental resources, and other relevant factors to be analyzed in the Environmental Assessment (EA) required as part of the National Environmental Policy Act of 1969; and that as part of that process, you are requesting any information regarding known resources in or around the project area.

The Virginia Department of Agriculture and Consumer Services (VDACS), through the efforts of our Office of Farmland Preservation, works to promote farmland preservation in Virginia in cooperation with localities, individual landowners and the private sector. Based on the information you have provided, it appears that no lands zoned agricultural will be involved. Should you need information relating to agricultural lands, you may want to contact the locality where the project is located about existing or proposed agricultural and/or forestal districts in the project area as well as any other local programs, existing or proposed, to protect farmlands in the area of the project.

Our agency also works closely with the Department of Conservation and Recreation (DCR) in determining the potential impact of proposed projects on state endangered and threatened plant and insect species. Through a Memorandum of Agreement between our agencies, DCR reviews these projects and submits comments on our behalf. Consequently, we defer to DCR's response to your inquiry. If after researching its database of natural resources, critical habitats and species locations, DCR finds that a project poses a potential adverse impact on an endangered or threatened plant or insect species, the appropriate information will be referred to this agency for further review and possible

mitigation. Please note that requests of this nature should be sent to Rene Hypes at the DCR Division of Natural Heritage Project Review Program. Ms. Hypes can be reached at (804) 371-2708 or rene.hypes@dcr.virginia.gov.

Thank you for your letter. I hope this response to your requests will be helpful as you proceed with your environmental assessment.

Sincerely,

Matthew J. Lohr
Commissioner

cc: Sandra J. Adams, Deputy Commissioner
Andy Alvarez, Director, Division of Consumer Protection
Kevin Schmidt, Director, Office of Policy, Planning and Research

Nies, Nicholas

From: Conlon, Andrew <Andrew.Conlon@cpschools.com>
Sent: Tuesday, November 26, 2013 9:56 AM
To: Smizik, Scott (VDOT)
Cc: Stutz, Paige; Bertocchi, John
Subject: Recreation / I-64 Widening & High Rise Bridge Replacement

Scott Smizik, AICP
Location Studies Project Manager
VDOT, Environmental Division

Mr. Smizik,

You have provided exhibits indicating those areas of the Deep Creek Elementary/High School, Deep Creek Middle School, and Crestwood Intermediate School campuses which lie within the I-64 Widening & High Rise Bridge Replacement project study area. In response to your four questions concerning whether those areas are used for public school recreation/athletics, and also if these same areas are used for non-school public recreation/athletics (such as community sports leagues), we offer the following:

1) The specified area of the Deep Creek High School property is wooded/undeveloped and <u>is</u> <u>not</u> currently used for public school recreation/athletics or for non-school public recreation/athletics (such as community sports leagues).
2) The specified area of the Deep Creek Middle School property <u>is</u> currently used for public school recreation/athletics or for non-school public recreation/athletics (such as community sports leagues). A temporary loss of the use of all or a portion this property due to construction, or permanent loss of all or a portion of this property due to right-of-way expansion, will have a negative impact on school athletics, recreation programs and community use. The school administration is not in support of losing this portion of School Board property.
3) The specified area of the Crestwood Intermediate School property <u>is</u> on the periphery of area used for public school recreation/athletics or for non-school public recreation/athletics (such as community sports leagues).
4) To reiterate, Chesapeake Public School athletic fields and open space areas are used for non-school public recreation/athletics (such as community sports leagues).

I trust this answers your questions; should you need any further response in this regard, please do not hesitate to contact me.

COMMONWEALTH of VIRGINIA
DEPARTMENT OF TRANSPORTATION
RICHMOND DISTRICT
2430 Pine Forest Drive
COLONIAL HEIGHTS, VA 23834
www.VDOT.Virginia.gov

Gregory A. Whirley
COMMISSIONER

April 4, 2014

Ms. Julie V. Langan, Director
ATTN: Mr. Marc Holma, Office of Review and Compliance
Virginia Department of Historic Resources
2801 Kensington Avenue
Richmond, VA 23221

Route: Interstate 64
Project No.: 0064-131-783, P101
City: Chesapeake
Funding: Federal
UPC: 104366
VDHR File No.: 2013-0971

Dear Mr. Holma:

As you are aware, the Virginia Department of Transportation (VDOT) is conducting a corridor study regarding the proposed widening of Interstate 64 and the replacement of the George A. Treakle Bridge in the City of Chesapeake. In a letter dated 7 March 2014, the VDOT submitted the results of the cultural resources surveys completed for this project. As part of this submittal, the VDOT made eligibility recommendations for the resources identified during the course of the fieldwork for this project. The VDOT recommended that no archaeological resources are eligible for the National Register of Historic Places (NRHP). In addition, the VDOT acknowledged that two previously recorded architectural resources are listed on the NRHP: the Great Dismal Swamp (VDHR No. 131-0035) and the Sunray Historic District (VDHR No. 131-5325) and the VDOT recommended that no other architectural resources whether newly identified or previously recorded are recommended eligible for the NRHP.

In a letter dated 26 March 2014, the VDHR responded to the recommendations made for the architectural resources. In that letter, the VDHR agreed with the VDOT's recommendations with the exception of the recommendation made for the Gilmerton Cut (VDHR No. 131-0035). The VDOT proposed that the entire Gilmerton Cut is not

eligible for the NRHP individually, nor as part of the Great Dismal Swamp. However, the VDOT did propose that the portion south of the boat basin does retain sufficient integrity and therefore is individually eligible for the NRHP. The VDHR stated that it believes "that it [Gilmerton Cut] is eligible for listing in the NRHP for its association with the Great Dismal Swamp and individually as part of the Multiple Property Documentation for the Great Dismal Swamp canal system." At that time, the VDHR did not comment on the VDOT-recommended boundaries for the Gilmerton Cut. At a 31 March 2014 meeting between the VDOT and the VDHR, the VDHR requested some additional photos of the resource to aid in the rendering of a decision concerning the proposed boundaries of the Gilmerton Cut and its potential individual eligibility.

Gilmerton Cut

Initially, the consultant that completed the cultural resource work for this project proposed that the Gilmerton Cut be considered a contributing resource to the Great Dismal Swamp (VDHR No. 131-0035) and is eligible for the NRHP under Criterion A for trends in history and Criterion C for engineering as a good example of a canal. The Great Dismal Swamp was listed on the NRHP in 1988 and both a National Register nomination form and a Multiple Property Documentation form (MPD) were completed for the resource. The National Register nomination form does not include the Gilmerton Cut in the eligible boundaries for the resource. The nomination states that "at this time, only the canal and related Feeder Ditch to Lake Drummond which properties are administered by the U.S. Army Corps of Engineers, are being formally proposed for nomination." The MPD lists the Gilmerton Cut as a component of the Great Dismal Swamp; however, in order for a resource to be included in a MPD that resource must be individually eligible. The VDOT maintains that the Gilmerton Cut in its entirety is not individually eligible and therefore should not be included in the MPD.

The consultant recommended that the Gilmerton Cut be included within the National Register boundaries of the Great Dismal Swamp. The VDOT disagrees with this recommendation because the portion of the Gilmerton Cut that falls within the project APE, particularly that section from the boat basin to the north, does not possess sufficient integrity to convey significance under Criteria A and C. Currently, the boat basin functions primarily as a neighborhood marina which has destroyed the engineering characteristics of the original canal. The area surrounding the Gilmerton Cut contains a considerable amount of modern residential, highway, and industrial development, please see aerial photos below. In addition, a portion of the Gilmerton Cut to the north of I-64 at Jarvis Road and Richwood Avenue has been filled in and the resource was re-routed through a concrete culvert under the interstate during the construction of I-64.

The combination of modern development and alterations to the original footprint of the Gilmerton Cut, particularly that part north of the boat basin, has compromised the resource to such a degree that it no longer resembles or functions as a navigation feature. The northern remnants of the Gilmerton Cut do not embody the distinctive characteristics of a historic navigation feature. Instead, it is better characterized today as a neighborhood marina, drainage feature, and industrial outfall ditch without providing any remaining connectivity between natural waterways.

Portion of the Gilmerton Cut to the North of I-64

Portion of the Gilmerton Cut to the South of I-64

Aerials dating from the 1990s into the 2000s show how the configuration of the boat basin has changed over time due to modern, residential construction in the area.

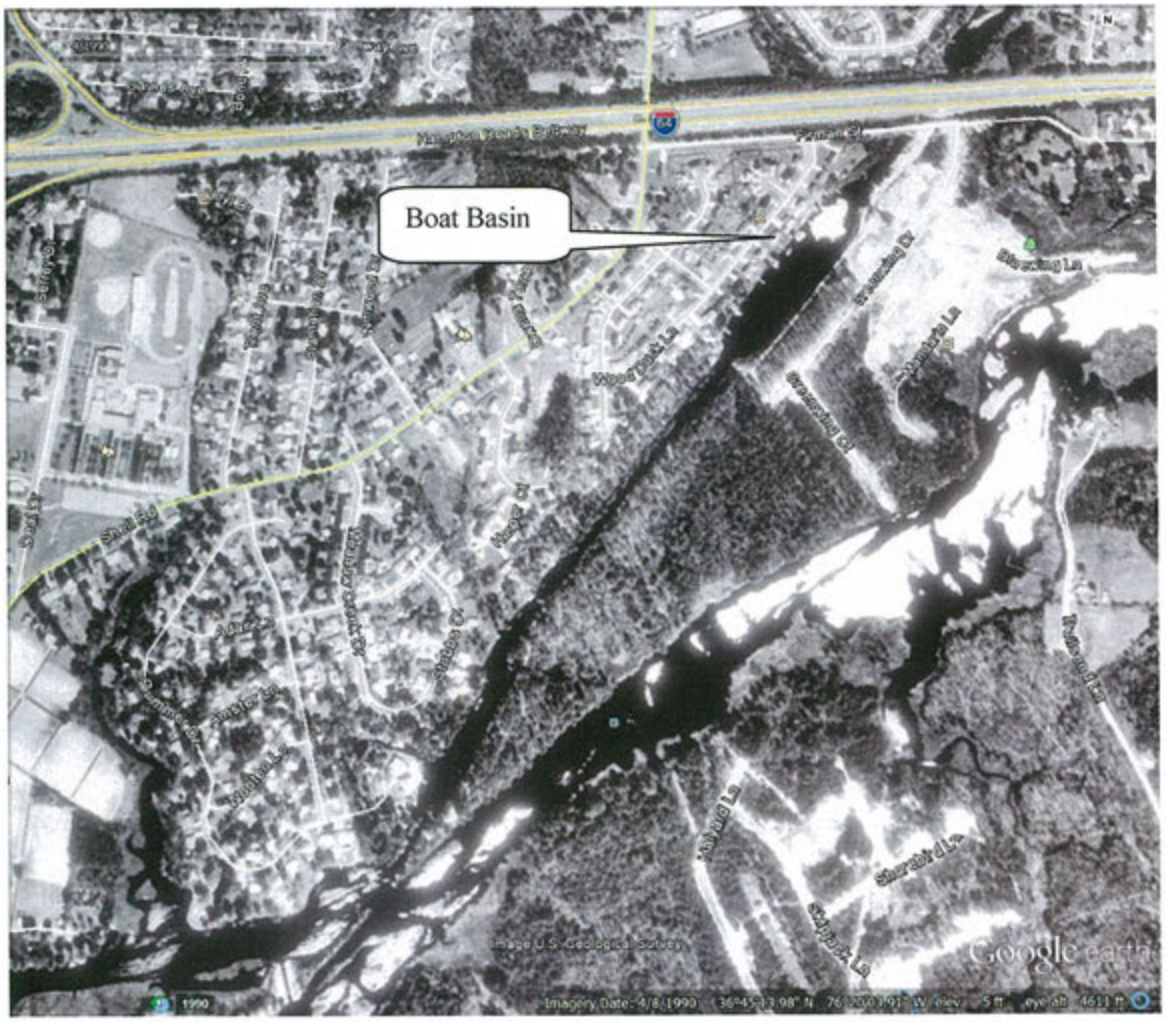

Aerial Photo from 1990

Aerial Photo from 1994

Aerial Photo from 2002

The VDOT does believe that the portion south of the boat basin does retain enough integrity to convey its significance and be eligible for the NRHP. The map below shows the proposed boundaries of the Gilmerton Cut. The boundaries begin south of the boat basin and trend to the south to Deep Creek. This portion of the Gilmerton Cut remains intact and possesses integrity of location, setting, design, feeling, association, workmanship, and materials and therefore conveys its significance under Criteria A and C.

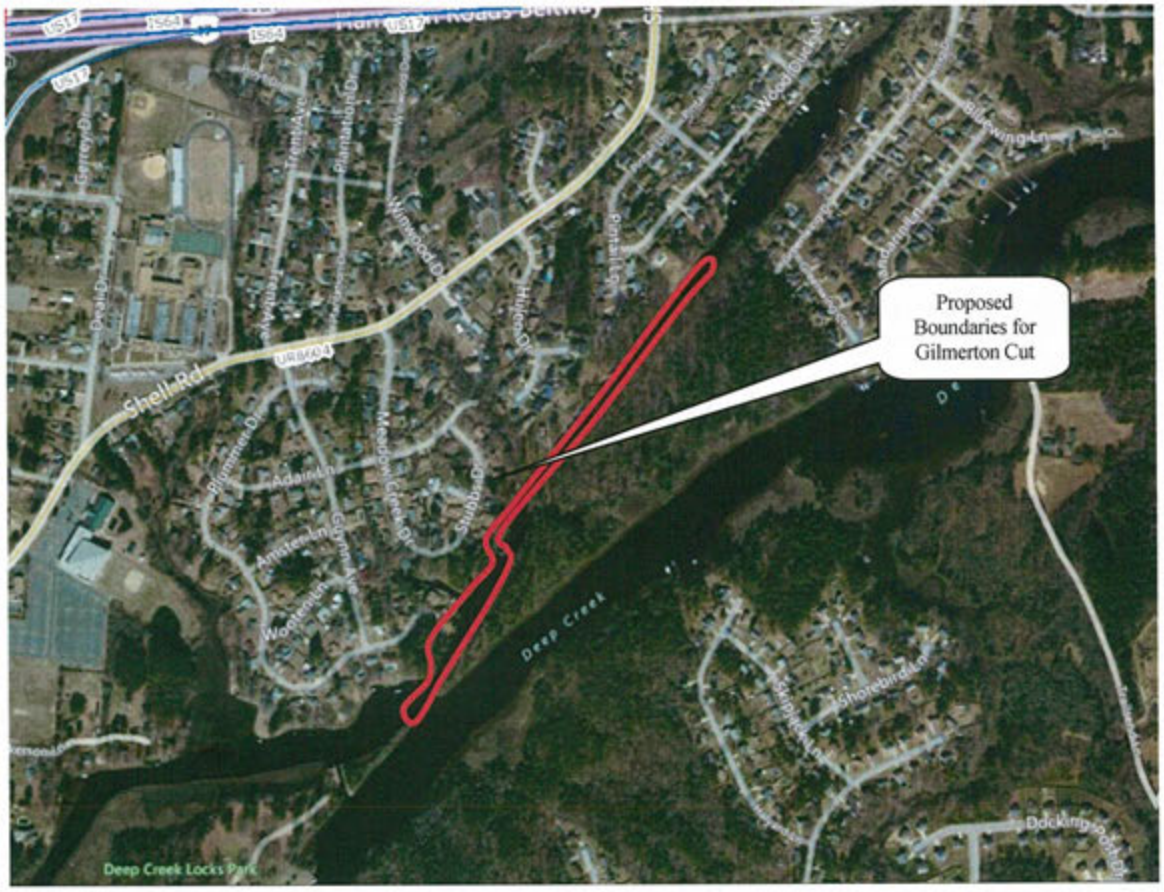

Proposed Boundaries for the Gilmerton Cut

The following photos show the current conditions of the Gilmerton Cut.

Photo 1. Richwood Avenue facing north

Photo 2. Richwood Avenue Facing south

Photo 3. Waterlawn Avenue facing west

Photo 4. Waterlawn Avenue Facing south

Photo 5. Jarvis Road facing southwest

Photo 6. Jarvis Road facing west

Photo 7. Jarvis Road view to southwest

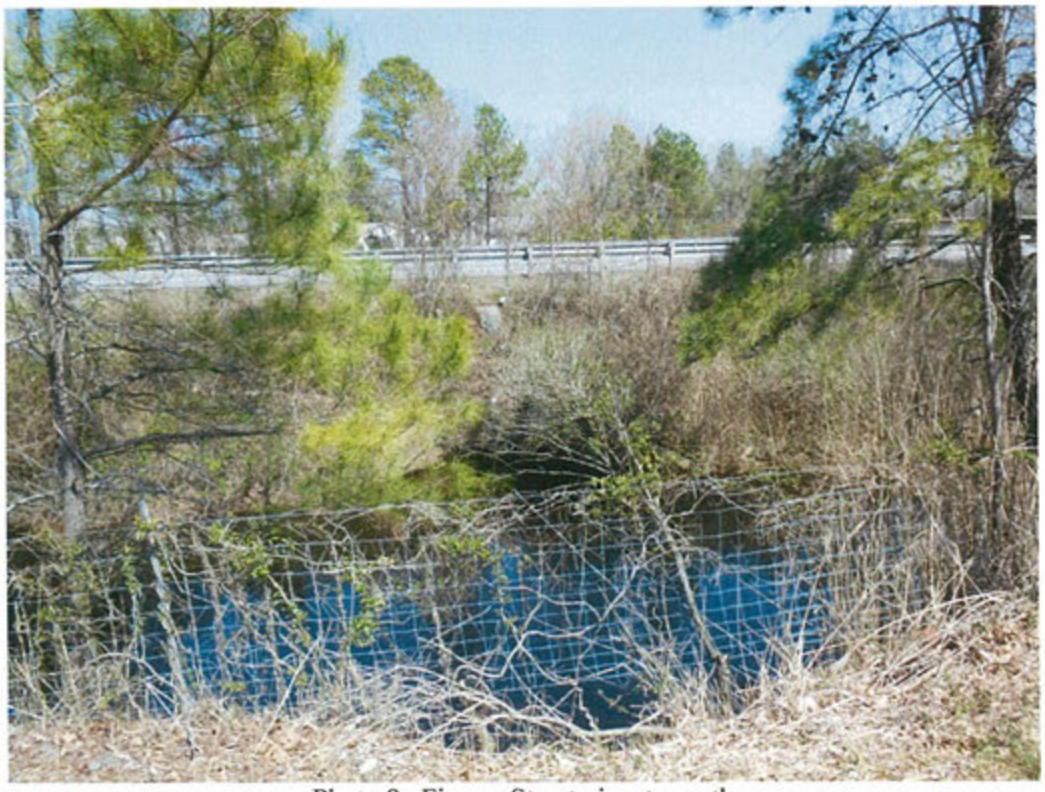

Photo 8. Firmen Street view to north

Photo 9. Firmen Street view to the south

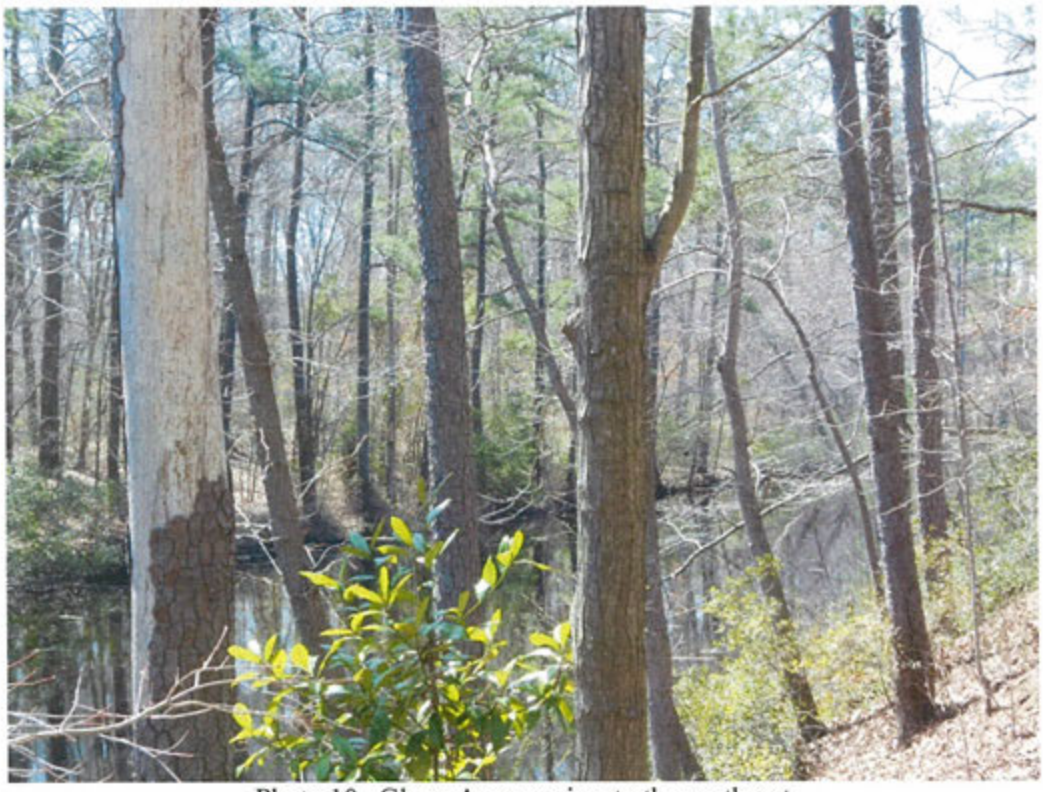

Photo 10. Glynn Avenue view to the southeast

Photo 11. Plummer Drive view to the east

Photo 12. Plummer Drive view to southeast

Photo 13. Plummer Drive view to the northeast

Photo 14. Plummer Drive view to the southeast

The VDOT invites you to indicate your concurrence with our recommendations by completing the signature block below within 30 days of receipt of this letter. If you have any questions or need additional information about this project, please do not hesitate to contact me at (804)524-6269 or at Sarah.Clarke@vdot.virginia.gov.

Sincerely,

Sarah M. Clarke

Sarah M. Clarke
VDOT Preservation Program Manager
Richmond District

****

The Virginia Department of Historic Resources (VDHR) concurs with the Virginia Department of Transportation's (VDOT's) recommendations that:

> -only the portion of the Gilmerton Cut that falls within the VDOT's proposed boundaries is individually eligible for the National Register of Historic Places (NRHP) and may be included as part of the Great Dismal Swamp.

for Ms. Julie V. Langan
Director, Virginia Department of Historic Resources

7 April 14
Date

DHR # 2013-0971

Nies, Nicholas

From: Smizik, Scott (VDOT) <Scott.Smizik@vdot.virginia.gov>
Sent: Friday, May 16, 2014 2:22 PM
To: Bertocchi, John; Conlon, Andrew
Cc: Mack.Frost@dot.gov; Earl Sorey; Arnold, Elizabeth, P.E. (VDOT)
Subject: I64/High Rise Bridge Corridor Study - 4(f)
Attachments: Recreation / I-64 Widening & High Rise Bridge Replacement; Crestwood.pdf; DeepCreekSchools.pdf

Importance: High

Andy and John –

Thank you for taking the time to meet with me on the 13th to discuss the Interstate 64/High Rise Bridge Corridor Study and its implications on Chesapeake Public School property. As we discussed, because these properties have recreational areas that are open to the public, they require consideration under Section 4(f) of the Department of Transportation Act (Title 23 CFR 774). While we came to some general agreement about potential de minimis findings, you requested that I put together an email summarizing our discussion so you may share it with the Assistant Superintendent and provide a more formal response. I also wanted to provide you with a link to an FHWA web site that summarizes the Section 4(f) process: http://www.environment.fhwa.dot.gov/4f/4fAtGlance.asp.

A de minimis determination is made when the project would not adversely affect the activities, features, or attributes qualifying a park, recreation area, or refuge for protection under Section 4(f). In other words, the impact would not adversely impact the use of the school properties as public recreation resources. Based on our previous coordination with your office (attached), our engineers focused on avoiding impacts to your properties to the greatest extent possible. Despite these efforts, we are still projecting minimal impacts to your properties under a "worst case" scenario. This is not to say that these impacts are guaranteed to occur if the project was to move to design/construction, but must be considered under the Environmental Assessment (EA) that is being prepared to comply with the National Environmental Policy Act of 1969, as amended (NEPA).

The bullets below document potential impacts and summarize our discussions for each of the four school properties.

- Crestwood Intermediate School: In November 2013 you confirmed that the wooded boundary separating the athletic fields from Interstate 64 is considered to be on the periphery of the recreational area. Our current analysis projects a 0.17 acre impact to this wooded area that would not extend onto the athletic fields (see Crestwood attachment). Given this limited impact, we seek your agreement that the projected impacts would not have an adverse effect on the recreational features that qualify the property for consideration under Section 4(f) and that a de minimis finding would be appropriate.

- Deep Creek Middle School: In November 2013, you stated that the identified property was used to support public recreation activities. Our current analysis projects a 0.55 acre impact along the northernmost portion of this area (see Deep Creek Schools attachment). Given this limited impact, we seek your agreement that the projected impacts would not have an adverse effect on the recreational features that qualify the property for consideration under Section 4(f) and that a de minimis finding would be appropriate.

- Deep Creek Elementary School: Our "worst case" scenario for the Route 17 interchange avoids impacts to the school and associated recreational areas (see Deep Creek Schools attachment). Therefore, there are no resources to consider under Section 4(f).

- Deep Creek High School: In November 2013, you stated that the wooded area north of the existing athletic fields is not used to support recreational activities. Our current analysis projects a 0.26 acre impact along the northernmost portion of this wooded area (see Deep Creek Schools attachment). However, because this area is not used as a public recreation facility, we seek your agreement that it need not be considered a Section 4(f) resource.

Assuming you agree with the proposed de minimis findings, our next steps would be:

1) Advance with the publication of the Draft EA (scheduled for Fall 2014). The Draft EA and other public documents would document the three 4(f) properties and indicate that the Chesapeake Public Schools are in agreement with a potential de minimis finding.
2) Following the completion of the public review of the Draft EA, I would provide you with any comments we may have received regarding your properties/potential 4(f) impacts and seek your official/written concurrence on a future de minimis finding.
3) FHWA would publish its intent to make a de minimis finding in the Revised EA that would be made available to the public
4) If/when funding became available to advance the project to design/construction, FHWA would make its de minimis finding in a decision document (additional coordination with your office would occur to support this action)

As we discussed, this analysis is still being refined and I would appreciate it if you would not distribute these documents until FHWA and VDOT are ready to publish the Draft EA. If there are any substantive changes to this information, I will let you know.

In order to stay on schedule for this publication, I would ask that you provide me with your response within two weeks. In the meantime, if you have any questions or wish to discuss the study in greater detail, please do not hesitate to call or email.

Scott Smizik, AICP
Location Studies Project Manager
Virginia Department of Transportation
Environmental Division
1401 East Broad Street
Richmond, Virginia 23219
Desk: (804) 371-4082
Cell: (804) 338-7083
Fax: (804) 786-7401
Scott.Smizik@VDOT.Virginia.gov

Maximum Area of Impact
(worse case)

Parcel Boundary

Section 4(f) Resources
Crestwood Intermediate School

Interstate 64 / High Rise Bridge Corridor Study
Environmental Assessment

City of Chesapeake

State Project Number: 0064-131-783, P101; UPC: 104366
Federal Project Number: NH-IM-064-3(481)

Mapping Source: VDOT and City of Chesapeake

Maximum Area of Impact
(worse case)

Parcel Boundary

Section 4(f) Resources
Deep Creek Schools

Interstate 64 / High Rise Bridge Corridor Study
Environmental Assessment

City of Chesapeake

State Project Number: 0064-131-783, P101; UPC: 104366
Federal Project Number: NH-IM-064-3(481)

Mapping Source: VDOT and City of Chesapeake

COMMONWEALTH of VIRGINIA
DEPARTMENT OF TRANSPORTATION
RICHMOND DISTRICT
2430 Pine Forest Drive
COLONIAL HEIGHTS, VA 23834
www.VDOT.Virginia.gov

Gregory A. Whirley
COMMISSIONER

June 6, 2014

Ms. Julie V. Langan, Director
ATTN: Mr. Marc Holma, Office of Review and Compliance
Virginia Department of Historic Resources
2801 Kensington Avenue
Richmond, Virginia 23221

Route:	Interstate 64
Project:	0064-131-783, P101
City:	Chesapeake
Funding:	Federal
UPC:	104366
DHR File:	2013-0971

Dear Mr. Holma:

The Virginia Department of Transportation (VDOT) is conducting corridor study regarding the proposed project to widen Interstate 64 and replace the George A. Treakle Bridge (commonly referred to as the High Rise Bridge) in the City of Chesapeake. The corridor study area begins at the Interstate 64/Interstate 464 Interchange and ends at the Interstate 64/Interstate 264 Interchange, roughly a distance of eight miles. The Area of Potential Effect (APE) for the study was defined as 100 feet from the edge of pavement along the existing Interstate 64 corridor from Interstate 464 to Interstate 264, a 600-foot buffer around the High Rise Bridge, and radial buffers of 1,500 feet around four interchanges (Interstate 64/Interstate 264, Interstate 64/U.S. Route 13, Interstate 64/George Washington Highway, and Interstate 64/Interstate 464).

The VDOT previously coordinated this project with your office in early 2014 with the submittal of archaeological and architectural surveys. As a result of this coordination, the only historic properties indentified within the APE were the Dismal Swamp (DHR Survey No. 1341-0035) and Sunray Historic District (DHR Survey No. 131-5325), properties that are already listed on the National Register. On April 7, 2014, your office concurred that only the portion of the Gilmerton Cut that falls within the VDOT's proposed boundaries defined in the letter dated April 4, 2014 is individually eligible for the National Register and may be included as part of the Great Dismal Swamp.

Now, as the study of the proposed corridor continues, 15 small additions and expansions of variable size have been added to five sections of the original APE due to planning level design changes. On behalf of the Federal Highway Administration, the VDOT is coordinating this federally-funded project with the Virginia Department of Historic Resources (VDHR) in accordance with Section 106 of the National Historic Preservation Act of 1966, as amended, and its implementing regulations, 36 CFR 800. Additional archaeological and architectural surveys were conducted within the additional and expansions to the original APE. The results of these additional surveys are presented as supplemental to the original survey reports.

Archaeology

The VDOT is submitting two hard copies and one CD of the supplemental archaeological survey report, *Supplemental Archaeological Survey for the Interstate 64/High Rise Bridge Corridor Study, City of Chesapeake, Virginia* (May 2014) by Daniel Baicy of Cultural Resource Analysts, Inc., for your review and comment in accordance with the existing federal consultation process as described in 36 CFR Part 800. We believe the additional archaeological survey and report meet your department's *Guidelines for Archaeological Investigations in Virginia* (1996), the 1999 *Programmatic Agreement Between the Virginia Departments of Transportation and Historic Resources Concerning Interagency Project Coordination*, and the "Secretary of the Interior's Standards and Guidelines for Archaeology and Historic Preservation" (*Federal Register* 48:44716-44742). Approximately 198 acres were surveyed as part of this supplemental project.

Supplemental archaeological survey of the additions and expansions to the corridor study area resulted in the identification of two previously recorded archaeological sites (44CS0233 and 44CS0275) and one isolated find (IF-1). The VDOT agrees with our consultant that sites 44CS0233 and 44CS0275 are not individually eligible for the National Register under Criteria A, B, C or D, and that the cemetery located at site 44CS0275 does not meet the qualification for eligibility to the National Register under special Criteria Considerations C or D. The isolated find (IF-1) is, by definition, not eligible for the National Register.

Architecture

The VDOT is submitting two hard copies and one CD of the supplemental architecture survey report titled *Supplemental Architectural Survey for the Interstate 64/High Rise Bridge Corridor Study, city of Chesapeake, Virginia* (May 2014) by Cultural Resource Analysts, Inc. (CRA). VDOT believes the documentation of the results of the survey meets the standards set forth in both the Secretary of the Interior's *Standards and Guidelines for Archaeology and Historic Preservation* (48FR44716-44742) and the Virginia Department of Historic Resource's (VDHR) Guidelines for Preparing Identification and Evaluation Reports (1992).

Previously Recorded Architectural Resources
There are five previously recorded architectural resources within the project APE. These resources include one cemetery, three dwellings, and one municipal/school facility. In 2007, the VDHR recommended that none of these resources are individually eligible for the NRHP under Criterion A, B, C, or D. There are no known associations with important people or events and the resources are typical examples of their time periods. The property resource types are common, the design and workmanship undistinguished, and the materials stock. The resources do not have the potential to yield future information. The VDOT agrees with these eligibility recommendations.

Previously Recorded Architectural Resources

VDHR No.	Resource	Eligibility Recommendation
131-5339	Mount Olive Cemetery	Not Eligible 2007
131-5340	House, 1045 Great Bridge Boulevard, Route 190	Not Eligible 2007
131-5341	House, 1037 Great Bridge Boulevard	Not Eligible 2007
131-5343	House, 1029 Great Bridge Boulevard	Not Eligible 2007
131-5344	Chesapeake Schools Department of School Plants	Not Eligible 2007

Newly Identified Architectural Resources
A total of 23 newly identified architectural resources were surveyed with the project APE. All of these resources are single dwellings with the exception of the duplex at 826 Dorcas Road (VDHR No. 131-5088), which is a one-story frame dwelling clad in brick veneer built in 1960. The remaining single dwellings are predominantly in the Ranch style and are one-story houses built in the 1950s and 1960s. The Ranch houses are wood frame dwellings clad in either brick veneer, vinyl siding, aluminum siding, or asbestos siding. The exceptions are the dwelling at 1205 Burns Street (VDHR No. 131-5087) which is of no particular style and was built in 1925 c; and the house at 586 Byron Street (VDHR No. 131-5099) built in 1966.

The VDOT recommends that none of the newly identified architectural resources are individually eligible for, nor are they contributing resources to a historic district, for the NRHP under Criterion A, B, C or D. There is no known association with important people or events and the resources are typical examples of their time periods. The property resource types are common, the design and workmanship undistinguished, and the materials stock. The resources do not have the potential to yield future information (please see chart below).

Newly Identified Architectural Resources

VDHR No.	Resource	Eligibility Recommendation
131-5079	House, 720 Raeside Avenue	Not Eligible
131-5080	House, 721 Raeside Avenue	Not Eligible
131-5081	House, 1237 Great Bridge Boulevard	Not Eligible
131-5082	House, 1241 Great Bridge Boulevard	Not Eligible
131-5083	House, 1245 Great Bridge Boulevard	Not Eligible
131-5084	House, 731 Marcus Street	Not Eligible
131-5085	House, 727 Marcus Street	Not Eligible
131-5086	House, 1221 Burns Street	Not Eligible
131-5087	House, 1205 Burns Street	Not Eligible
131-5088	Duplex, 826 Dorcas Road	Not Eligible
131-5089	House, 828 Dorcas Road	Not Eligible
131-5090	House, 827 Dorcas Road	Not Eligible
131-5091	House, 825 Dorcas Road	Not Eligible
131-5092	House, 833 Dorcas Road	Not Eligible
131-5093	House, 302 McCosh Drive	Not Eligible
131-5094	House, 321 Haledon Road	Not Eligible
131-5095	House, 317 Haledon Road	Not Eligible
131-5096	House, 313 Haledon Road	Not Eligible
131-5097	House, 309 Haledon Road	Not Eligible
131-5098	House, 305 Haledon Road	Not Eligible
131-5099	House, 586 Byron Street	Not Eligible
131-5100	House, 600 Byron Street	Not Eligible
131-5101	House, 589 Byron Street	Not Eligible
131-5102	House, 593 Byron Street	Not Eligible

The VDOT invites you to indicate your concurrence with our recommendations by completing the signature block below within 30 days of receipt of this letter and the attached reports. Please return the original signature to this office.

Thank you for your assistance. If you have any questions or need additional information about this report or this project, please do not hesitate to contact me at (757) 925-2372 or at Kennth.Stuck@vdot.virginia.gov or Sarah Clarke at Sarah.Clarke@VDOT.virginia.gov or by phone 804.524.6269.

Sincerely,

Kenneth E. Stuck

Kenneth E. Stuck
Cultural Resource Coordinator (Archaeologist)

Sarah M. Clarke

Sarah M. Clarke
Architectural Historian

KES:
Attachments

cc: Mr. James E. Baker, City of Chesapeake, w/attachment
Chief Barry W. Bass, Nansemond Tribe, w/attachment
Mr. Brian Cofield, VC&NS, w/attachment
Ms. Amanda Baxter, WR&A

bcc: Ms. M. E. Hodges, with report and CD
Mr. S. Smizik
Mr. K. E. Stuck

The Virginia Department of Historic Resources concurs with the Virginia Department of Transportation's recommendations that:

- the Area of Potential Effect for VDOT Project No. 0064-131-783, P101, UPC 104366 is properly defined;

- archaeological sites 44CS0233 and 44CS0275 are not individually eligible for the National Register of Historic Places under Criteria A, B, C, or D;

- the cemetery located at site 44CS0275 does not meet the qualification for eligibility for the National Register under special Criteria Considerations C or D;

- the following resources, VDHR Nos.: 131-5079 through 131-5102, and VDHR Nos.: 131-5339 131-5340, 131-5341, 131-5343, and 131-5344 are not individually eligible for, nor are they contributing resources to a historic district, under Criterion A, B, C, or D for the NRHP.

For VDOT Project No. 0064-131-783, P101; UPC: 104366; VDHR File No.: 2013-0971.

for Ms. Julie V. Langan
Director, Virginia Department of Historic Resources
Virginia State Historic Preservation Officer

July 14
Date

DHR# 2013-0971

Nies, Nicholas

From: Smizik, Scott (VDOT) <Scott.Smizik@vdot.virginia.gov>
Sent: Wednesday, July 23, 2014 8:19 AM
To: Mack.Frost@dot.gov; Nies, Nicholas
Cc: Deem, Angel N. (VDOT)
Subject: FW: Section 4(f) Discussion

FYI

From: Bertocchi, John [mailto:John.Bertocchi@cpschools.com]
Sent: Wednesday, July 23, 2014 8:15 AM
To: Smizik, Scott (VDOT)
Cc: Stutz, Paige
Subject: FW: Section 4(f) Discussion

Scott,
I have reviewed the two Interstate 64/High Rise Bridge Corridor Study proposals we discussed last week with Paige Stutz, Assistant Superintendent for Operations. Chesapeake Public Schools' comments are as follows for each option:

Option 1: "10 Lane Build Alternative - Current Option (.26 Acre permanent impact/.32 acre temporary impact):
Based on the current site limitations and the use of the property at Deep Creek Middle School, the permanent loss of .26 acre would create an adverse impact on this site's recreational and operational use. Chesapeake Public Schools does not believe the impact to be a "de-minimus" finding for either the current and/or possible future use of this site.

Option 2: "10 Lane Build Alternative – Minimization Option (0.0 permanent impact/.20 temporary impact):
Based on the current site limitations and the use of the property at Deep Creek Middle School, the temporary loss of .20 acre could be accommodated. It important to note that no schedule and/or estimated period of time for the temporary loss of the acreage has been provided at this time. Assuming the temporary loss does not become lengthy and/or permanent, Chesapeake Public Schools believes this should not have a long-term adverse effect on the operational/recreational use of the property and believes the impact to be a "de-minimus" finding. This may not be the case if/when the VDOT project is approved and funded and the condition and/or use of the property has changed over time.

John Bertocchi, Senior Planner
New Construction and Planning Department
Chesapeake Public Schools
757.547.0580

From: Smizik, Scott (VDOT) [mailto:Scott.Smizik@vdot.virginia.gov]
Sent: Tuesday, July 15, 2014 11:11 AM
To: Bertocchi, John; Conlon, Andrew
Subject: Section 4(f) Discussion
Importance: High

John and Andy-

Thanks for agreeing to meet via conference call today. I am having some technical difficulties with my Go-To-Meeting account at the moment. If I cannot get that corrected, I will plan on calling your office directly at 2:00.

Nies, Nicholas

From: Smizik, Scott (VDOT) <Scott.Smizik@vdot.virginia.gov>
Sent: Monday, September 22, 2014 1:57 PM
To: Nies, Nicholas
Subject: FW: Interstate 64 Widening and High Rise Bridge Replacement Location Study

---

From: Dufore, Ezekiel (VDH)
Sent: Friday, August 30, 2013 4:51 PM
To: Smizik, Scott (VDOT)
Cc: Matthews, Barry (VDH); Albrecht, Edward (VDH)
Subject: Interstate 64 Widening and High Rise Bridge Replacement Location Study

Project #: 0064-131-783, P101
UPC #: 104366
Location: Chesapeake

VDH – Office of Drinking Water has reviewed the above project. Below are our comments as they relate to proximity to **public drinking water sources** (groundwater wells, springs and surface water intakes). Potential impacts to public water distribution systems or sanitary sewage collection systems must be verified by the local utility.

No groundwater wells are within a 1 mile radius of the project site.

No surface water intakes are located within a 5 mile radius of the project site.

The project is not within Zone 1 (up to 5 miles into the watershed) or Zone 2 (greater than 5 miles into the watershed) of any public surface water sources.

There are no apparent impacts to public drinking water sources due to this project.

Ezekiel Dufore
Office of Drinking Water
Virginia Department of Health
James Madison Building
109 Governor Street
Richmond, VA 23219
(w) 804-864-7201
ezekiel.dufore@vdh.virginia.gov